THE COMPLETE HÄFELE

Furniture and
Cabinetry Hardware

www.hafele.com/us

EVERY PROJECT IS AN OPPORTUNITY

Designers. Architects. Woodworking industry professionals. Large-scale manufacturers. All of them look to Häfele America Co. for solutions which bring function, action, organization and value to everything they do. From Häfele's founding in 1923 and Häfele America Co.'s beginnings in 1973, we have drawn upon the collective experience of our people to bring you the finest products and our unparalleled expertise in the industries we serve.

ARCHITECTS

With us you'll find a wide range of quality products to add functionality and complete your design.

DESIGNERS

We know that beauty and utility can coexist — and that you'll stop at nothing to get your customers the best products to meet their needs and your vision.

CABINET MAKERS & MILLWORKERS

Yours is a craft covered in sawdust and anchored in excellence. And our products make your work easier to put together, add appeal and stand the test of time.

LARGE-SCALE MANUFACTURERS

Thoroughly knowing your business, the products you sell and your customer base is the key to our continued, mutual success.

Decorative Hardware

Lighting

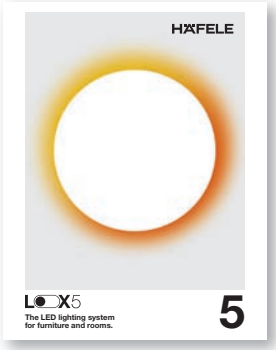

Kitchen Organization

Contents 3.2–3.3
Corner Solutions 3.4–3.19
Waste Bins 3.20–3.50
Pantry Solutions 3.51–3.69
Cabinet Solutions 3.70–3.95
Drawer Organization 3.96–3.119
Shelving/Railing Systems 3.120–3.128
Cabinet Accessories 3.129–3.148

Home and Closet Organization

Contents 4.2–4.3
Bed Fittings 4.4–4.9
Custom Products 4.10–4.17
TAG Omni Track® 4.18–4.34
HandiWALL® 4.35–4.55
Ceiling Storage System 4.56–4.57
Standards and Brackets 4.58–4.67
Media Storage and TV Lifts 4.68–4.73
TAG Wardrobe Fittings 4.74–4.115
Storage and Organization/ Wardrobe Accessories 4.116–4.166

Office Organization

Contents _____ 5.2
Power and Charging _____ 5.3–5.19
Cable Management/
Turntables _____ 5.20–5.32
Office Organization _____ 5.20–5.35
Computer Accessories ____ 5.36–5.50

Hinges and Stays

Contents _____ 9.2–9.3
Institutional Hinges _____ 9.4–9.11
Concealed Hinges _____ 9.12–9.82
Furniture Hinges _____ 9.83–9.94
Flap Hinges _____ 9.95–9.100
Lid and Flap Stays _____ 9.101–9.169
Glass Door Hinges _____ 9.170–9.180
Aluminum Frame Doors __ 9.181–9.190
Door Stops _____ 9.191–9.198

Casters, Feet, Legs, Table Fittings

Contents _____ 6.2
Casters _____ 6.3–6.15
Furniture Feet _____ 6.16–6.35
Table Legs _____ 6.36–6.61
Backrest Bracket _____ 6.62
Furniture Glides/Levelers ___ 6.63–6.79
Table Fittings _____ 6.80–6.97
Modesty Panel/
Privacy Screen Hardware/
Turntables _____ 6.98–6.90

Locks and Catches

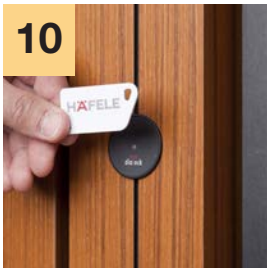

Contents _____ 10.2–10.3
Timberline Locks _____ 10.4–10.22
Symo 3000 Locks _____ 10.23–10.35
Locking Ladder Pull _____ 10.36
High Security Locks _____ 10.37–10.49
Keyed Cabinet Locks _____ 10.50–10.52
Gang Locking System _____ 10.53–10.54
Cabinet and Locker Locks _ 10.55–10.70
Electronic Cabinet Locking _ 10.71–10.86
Häfele Dialock Electronic _ 10.87–10.112
Access Control
Catches _____ 10.113–10.136

Sliding and Roller Shutters

Contents _____ 7.2–7.3
Information _____ 7.4–7.8
Guide and Glide Fittings _____ 7.9–7.13
Sliding Wood Door Fittings __ 7.14–7.55
Coplaner Door Fittings _____ 7.56–7.73
Sliding Glass Door Fittings __ 7.74–7.89
Accessories/
Door Straighteners _____ 7.90–7.93
Folding Cabinet
Door Fittings _____ 7.94–7.99
Vertical Sliding
Door Fittings _____ 7.100–7.105
Lateral Swing Fittings ____ 7.106–7.109
Pivoting Pocket
Door Fittings _____ 7.110–7.135
Roller Shutters _____ 7.136–7.143

Connectors and Shelf Supports

Contents _____ 11.2–11.3
Cabinet Connectors _____ 11.4–11.47
Shelf Connectors _____ 11.48–11.54
Biscuit Connectors/Dowels 11.55–11.64
Brackets _____ 11.65–11.77
Work Surface Connectors _ 11.78–11.83
Panel Connectors _____ 11.84–11.92
Special Connectors _____ 11.93–11.94
Bed Connectors _____ 11.95–11.99
Furniture Connectors ___ 11.100–11.110
Cabinet Shelf Supports _ 11.111–11.128
Wall Mounted
Shelf Supports _____ 11.129–11.152

Drawer Slides

Contents _____ 8.2–8.3
Double–Wall
Drawer Systems _____ 8.4–8.41
Single-Wall
Drawer Systems _____ 8.42–8.55
Concealed
Undermount Slides _____ 8.56–8.80
Ball Bearing Slides _____ 8.81–8.121
Epoxy/Plastic Slides _____ 8.122–8.132
Pull–Out Cabinet Slides __ 8.133–8.136

Consumables and Tools

Contents _____ 12.2–12.3
Screws _____ 12.4–12.33
Abrasives _____ 12.34–12.47
Adhesives _____ 12.48–12.61
Safety Equipment _____ 12.62–12.70
Drilling Jigs _____ 12.71–12.74
Measuring Materials _____ 12.75–12.79
Support Materials _____ 12.80–12.86
Drill Bits and Hand Tools 12.87–12.97
Shop Supplies _____ 12.98-12.104
Material Handling _____ 12.105-12.106

THE HÄFELE ONLINE STORE

A VITALLY IMPORTANT TOOL FOR MANAGING YOUR BUSINESS AND PROJECTS

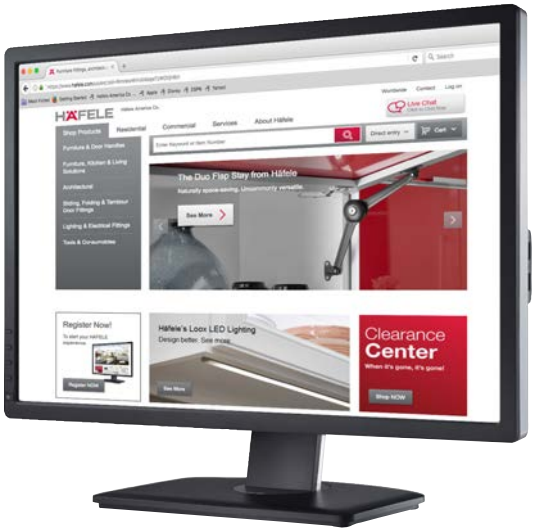

YOUR ULTIMATE ONLINE HARDWARE STORE IS RICH IN THE FEATURES YOU'VE REQUESTED:

- Sort by finish, size, style and many other attributes to easily find exactly what you want.
- Product accessories are conveniently displayed to ensure you won't miss essential product parts.
- Instant pricing and product availability information lets you make smarter business decisions.
- Customized account management gives you greater control over who uses your account — and how they use it.

ORDERING IS EASY AND CONVENIENT

Online and Live Chat:	**www.hafele.com/us**
Phone:	**800.423.3531**
Fax:	**800.325.6197**
E-mail:	**orders@hafele.us**

LET'S GET STARTED!

A SHORT TUTORIAL TO OUR WEBSITE

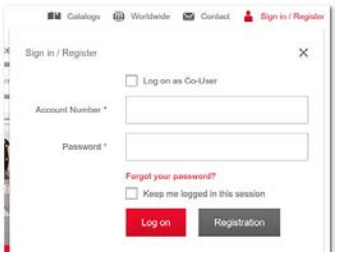

HOW TO LOG ON

To sign in to our website Select the "Sign in / Register" link in the top right navigation of the site. From there, you will be shown a sign in box where you will provide your Account Number and Password. If you do not have an Account select the Registration button to register for the site.

If you are logging in as a Co-User click the Box for Co-User and enter your Account #, username and password.

Then select Log on. You will now be able to view pricing and be able to purchase from our website.

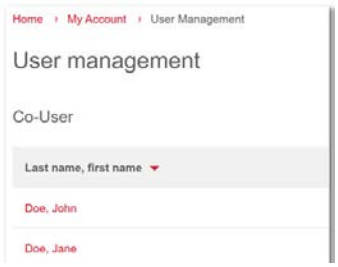

SETTING UP NEW USERS

After logging into the website you may set up additional users for the account. These Co-Users will be able to log in and operate within limits you designate on their access and ability to place orders. To setup a Co-User of the account — within the My Account section, select User Management and then select Add New User.

You will fill out a form and be able to provide a Username/Password for this new user. You may setup as many additional users that you wish for your account. Make sure that you provide them this information as no email will be sent to them.

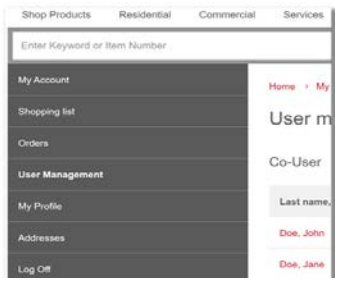

ACCOUNT OPTIONS

After you have logged into your account go to the My Account section. Once there, you will be able to review, update and manage your account in the following ways:

ORDER HISTORY
- Tracking information
- Invoicing
- Return request
- Print/download accounting documents

ACCOUNT MANAGEMENT
- Co-Users
- Delivery Addresses

HOW TO FIND WHAT YOU'RE LOOKING F0R

Kitchen Organization

Contents _____ 3.2–3.3
Corner Solutions _____ 3.4–3.19
Waste Bins _____ 3.20–3.50
Pantry Solutions_____ 3.51–3.69
Cabinet Solutions _____ 3.70–3.95
Drawer Organization _____ 3.96–3.119
Shelving/Railing Systems _ 3.120–3.128
Cabinet Accessories _____ 3.129–3.148

Product Group Sections
This catalog is organized into product group sections. The groups are indicated by tab color and section number. There is a Table of Contents at the beginning of each section.

Catalog Page Numbers
The section number is always shown first, followed by the page number within that section.
Example: 3.5 refers to **Section 3, Page 5**.

Häfele Item Numbers
Every Häfele item has a unique eight-digit item number with separating decimal points after the 3rd and 5th digit.
Example 263.20.805

Index Search
Looking for something specific? Use an index to search by keyword or Item number. Indexes are located in the back of the catalog.

Index by Product Type Pages a1–a10
Index by Item Number Pages n1–n40

SPECIAL SYMBOLS

Flat Head #7

Mounting screws and materials
Unless otherwise indicated, mounting screws are not included and must be ordered separately. The symbols shown next to the product drawing indicate the type and size of screw required. Mounting screws and materials are shown in **Section 12** beginning on page **12.4**.

Service+

Service+ customization is available for any product in this catalog featuring this symbol.

soft&silent

Indicates **Soft Close** anti-slam feature.

ixconnect

Indicates a **Häfele** manufactured connector.

Indicates items that are **Underwriter Laboratories** certified.

Indicates items that are **Electrical Testing Labs** certified.

Indicates items that are **CSA Group** certified.

A NOTE ABOUT SUSTAINABILITY

Häfele America Co. strives to be a good corporate citizen by acknowledging that our actions — from how our products are sourced and manufactured to how we conduct our operations and beyond — have a direct impact on our local surroundings as well as the industries we serve. As part of those efforts our customers may notice fewer available printed copies of this catalog and a push toward digital access for product and technical information. You've already chosen to join us in business. Please also join us now in fostering responsible sustainability.

HÄFELE'S CUSTOM CUT-AND-ASSEMBLE SERVICE

Service+

IT'S AS SIMPLE AS PLACING AN ORDER AND OPENING A BOX.

Service+ saves time, materials and steps in the shop. We'll do the cutting and assembly to your exact specifications then ship everything to your job site, ready to install right out of the box. Häfele offers customized cutting and assembling for any product in this catalog featuring the **Service+** symbol.

For more detailed information, call one of our Service+ specialists at 1-888-437-7477.

CUSTOMIZED COMPONENTS FOR KITCHEN, CLOSET AND COMMERCIAL PROJECTS INCLUDE:

- Custom-designed sliding door applications for wood and glass
- Cabinet doors for wood and aluminum-framed glass
- Cabinet drawers for wood and metal
- Loox LED LIghting, library ladders and leather and vinyl components

COMMERCIAL PROJECT CUSTOMIZATION INCLUDES:

- Kit packaging for cabinet and builder's hardware
- Sub-assembly
- Full assembly of drawer systems
- Packaging to specification
- Project development for commercial projects

YOUR SPECS – OUR EXPERTISE

SERVICE+ PRODUCT OFFERINGS

SERVICE+: YOUR SPECS – OUR EXPERTISE

Service+ is a value-added service we offer for certain products that can be sized, finished, assembled and packaged to your specificwations.

SAVE TIME AND MONEY WITH OUR CUSTOM CUT-AND-ASSEMBLE SERVICE

Service+ components are sized, assembled and packaged to your specifications. Customizable door and drawer fronts arrive ready to mount. Loox light bars are pre-assembled to your exact sizes. Aluflex sliding doors, with your specified infill panels arrive ready to install.

Ordering **Service+** products is fast and easy. Go online to our website to access either a PDF form or our online configuration tool where you can input your dimensions and other specifications. Once we receive the required information you will receive a detailed quote for your approval.

For more information call one of our Project Specialists at 1-888-437-7477 or email us at projects@hafele.us

SERVICE+ PRODUCT OFFERINGS:

ECODOMO LEATHER COMPONENTS

INCEPTION VINYL COMPONENTS

LOOX LED LIGHTING

LIBRARY LADDERS

SALICE DOOR SYSTEMS

ALUFLEX CUSTOM SLIDING DOORS

MATRIX DRAWER SYSTEMS

CUSTOM DRAWER, SHELF & CABINET PROTECTOR MATS

ALUMINUM FRAME DOORS

Classic and Premium: Häfele offers two categories of customizable Aluminum Frame Doors. Both offer superior Häfele quality with each providing unique advantages.

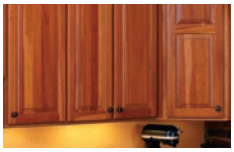

WOODEN DOOR AND DOOR FRONTS

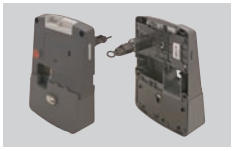

SAFE-O-MAT KEYS

ALUMINUM ROLLER SHUTTERS

EXTEND YOUR EXPERTISE WITH OUR PROJECT SERVICES

Here at Häfele America Co., we work with you every step of the way to ensure your project goes as smoothly as possible – from specification to installation.

Our Project Services team is comprised of a specially trained group of individuals who know all Häfele products exceptionally well and are just a phone call or email away from getting you the information and support you need.

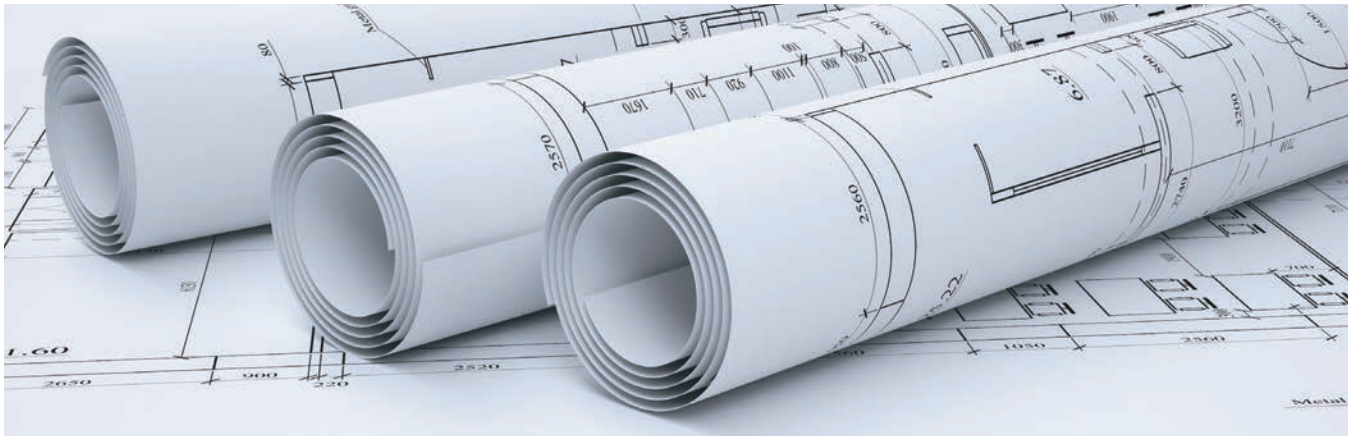

Häfele's Lighting Design Service is now available to enhance all your designs with today's most requested addition: LED lighting. It's the best way to brighten all your cabinet and room designs.

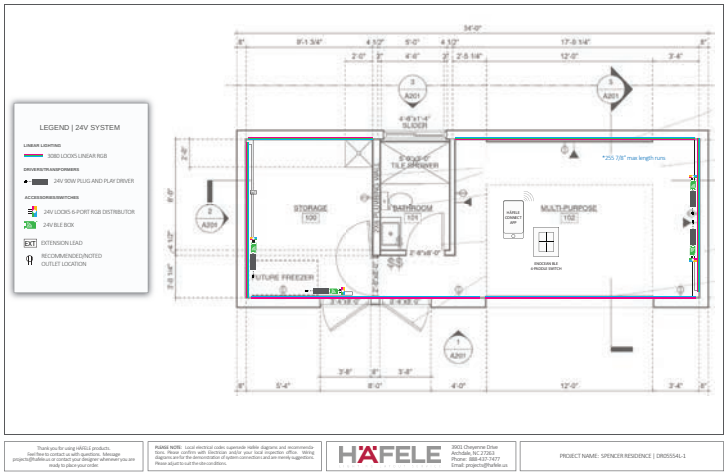

Our lighting professionals can provide you with a clear diagram, material list and price quote for lighting designs of any complexity. Whether for in-cabinet, accent lighting, up-lighting or toe kick lighting we'll make your vision shine with layout, technical and installation advice.

To submit your project, simply click on the "Services" tab of our website, then "Project Services" and "Lighting Design Service."

THE WORLD'S RESOURCE FOR HARDWARE

THINKING AHEAD

With a long and storied international history dating back to 1923, Häfele is a company with a global presence, focused on local results. Our people and our business are driven by an entrepreneurial spirit allowing us to operate closely with our customers and to know what they need, to understand their requirements, and to quickly identify opportunities for improvement. We are a company who believes in always looking ahead and in sharing our dynamism, creativity and long-term vision with our customers in order to assure our mutual success.

PRODUCT ASSORTMENT

Here at Häfele America Co., we know that our customers would rather pick from a select range of quality products than be overwhelmed by choices which may not be right for them. With us you'll find the best variety of hardware, architectural components and LED lighting solutions. And we continue to work on your behalf each day to make that selection even better.

MANUFACTURING EXPERTISE

For decades Häfele has been engineering its own innovative products to solve and eliminate common problems our industry faces — solutions you'll only find with us. Häfele Exclusive products include Loox5 LED lighting solutions, Slido sliding door systems, our Free Family of flap fittings, Ixconnect connector system, Matrix drawer systems and much more.

EVERYTHING FROM A SINGLE SOURCE

In order to succeed in our industry you need quality product and information. We offer both. But to truly thrive, you need a partner. And Häfele America Co. is proud to join with our customers on any project — from a single piece of furniture to outfitting an entire hotel chain with LED lighting solutions and architectural hardware — to ensure your continued and brilliant success.

It is my great and distinct honor to introduce our latest edition of The Complete Häfele. This book — whether you are currently holding it in your hands or flipping its pages digitally — is well-known throughout our industry as an encyclopedia for cabinet and furniture hardware solutions which build, organize, connect and improve each of your current and future projects.

You may notice that the catalog itself looks different than in years past — as our industry evolves, so too does Häfele in order to lead development and set the pace. Within its 1,324 pages, you'll find a deep, yet cultivated selection of products across a wide range of categories tailor-made to meet and exceed your expectations. Our reputation among the industries we serve demands our product teams consistently seek out, adopt and offer solutions which make the things you do easier, more functional and long-lasting.

An added benefit of working with Häfele is that we're part curator, part engineer. Our Häfele Exclusive range of products — Loox LED lighting, Ixconnect connectors, Free flap fittings, Matrix drawer boxes and more — are solutions you'll only find with us. Additionally though, our team works every day to leverage the global footprint of Häfele subsidiaries worldwide to bring you unique innovations which solve problems, add efficiency and perform all that could be asked of them.

The commitment we have to our customers at Häfele America Co., has also evolved with the times. All the ways we have to reach out and communicate directly with our customers — from our website and social media channels to our customer service and technical teams — have made it easier to learn from, experience and transact with us.

Our promise to you is one of continued inspiration, innovation and mutual achievement. It's a challenge we at Häfele America Co. embrace each day: to make certain that your experiences with us are not just good, but leave you with a consistent, positive impression that each and everything we do — no matter how small or seemingly insignificant — is done so with your best interests and success in mind.

We've been with you for a long time. In fact, Häfele America Co. will celebrate its 50th year in business in the year 2023. And while we intend to duly honor that milestone, one thing we won't be doing that year — or any other — is rest.

Sincerely,

Paul K. Smith
President, Häfele America Co.

3

HÄFELE

KITCHEN ORGANIZATION

HÄFELE

Corner Solutions

LeMans II 3.4–3.5
Magic Corner I 3.6–3.7
Magic Corner II 3.8–3.9
Suzie Q® 3.10–3.11
Revo 3.12
Twister 3.13
Revolving Three–quarter Round 3.14
Super Susan 3.15
Revolving Shelves 3.16
Lazy Susans 3.17–3.19

Waste Bins

Hailo US Cargo 3.20–3.21
Hailo Euro Cargo 3.22–3.23
Hailo Libero Opener 3.24
Grass Sensomatic Opener 3.25
Häfele Matrix Waste Bins 3.26–3.27
Pull–Out Bottom Mount 3.28–3.29
Salice Pull–Outs 3.30–3.31
KV Pull-Out Bottom Mount/Accessories 3.32–3.35
Bottom Mount Wire Waste System 3.36–3.38
Hailo Easy Cargo 3.39–3.40
Hailo Bottom Mount 3.41
Wood Frame Side Mount 3.42
KV Wood Frame Side Mount 3.43–3.44
KV Wood Frame Bottom Mount 3.45
Wood Frame Bottom Mount 3.46
KV Recycling Bin 3.47
KV Door Mounted Bin 3.47
Hailo Side Panel/Door Mounted 3.48
Free Standing Bin 3.48
Countertop Bin 3.48
Door Openers 3.49
Häfele Matrix Hamper 3.50

Pantry Solutions

Pantry Pull–Outs 3.51–3.53
Tandem Chef's Pantry 3.54–3.55
Tandem Solo Pantry 3.56–3.57
LAVIDO Pantry Pull–Out 3.58–3.65
Internal Drawer Pull–Out 3.66–3.67
Pantry Roll–Out Trays 3.68–3.69

Cabinet Solutions

iMOVE Pull Down Unit 3.70–3.71
Spice Racks 3.72–3.75
Base Pull–Outs 3.76–3.80, 3.82–3.87
Wall Pull–Outs 3.81
Storage Unit Pull–Outs 3.88
Towel Pull–Outs 3.89
Wood Base Pull–Outs 3.90–3.91
SmartCab® System 3.92–3.93
Wicker Baskets 3.94–3.95

Dimensional data not binding. Dimensions in mm, inches are approximate. We reserve the right to alter specifications without notice.

HÄFELE

Drawer Organization

Fineline™
– Kitchenware and Plate Organizer 3.96–3.99
– Cutlery Tray Inserts 3.100–3.104
– Move 3.105–3.108
Wood Cutlery/Spice Trays 3.109
Sky Cutlery Trays 3.110–3.111
Plastic Cutlery/Spice Trays 3.112–3.114
Medical Drawer Inserts 3.115
Drawer Liners 3.116
Cabinet Mats 3.117–3.119

Shelving/Railing Systems

Smartcube 3.120–3.121
YouK System 3.122–3.123
Backsplash Railing System 3.124–3.125
Kitchen Rail System 3.126–3.127
Metal Rail System 3.128

Cabinet Accessories

Tip Out Trays 3.129–3.130
Heat Shield 3.131
Under Sink Mats 3.132
Step Stools 3.133–3.134
Holders and Grommets 3.135
Racks, Baskets and Fences 3.136–3.137
Countertop Supports 3.138–3.139
Shelf Suspension System 3.140
Pull–Out Table Systems 3.141
Appliance Lift 3.142
Wood Accessories 3.143–3.144
Lattice Grills 3.145
Sweepovac Kitchen Vacuum 3.146
Ventilation Grills 3.147–3.148

Dimensional data not binding. Dimensions in mm, inches are approximate. We reserve the right to alter specifications without notice.

LeMans II

> Includes soft close
> Innovative mounting jig included; no measuring required
> Height of door hinge must be considered
> Shelves are height adjustable every 51 mm (2")
> For full height door and door/drawer applications
> Minimum door opening 85°
> Internal cabinet height: min. 546 mm (21 1/2")
> Weight capacity per shelf: 25 kg (55 lbs.)
> Material: Shelf: Melamine; Surround: Steel

Note
Please consider if a filler strip is needed based on your application – see next page.

soft&silent

→ Shelf Set

Model	Capacity (sq. in.)	Swing	maple/ champagne	maple/ chrome	white/ chrome	gray/ chrome	anthracite/ chrome
40	574	right	541.32.440	541.32.140	541.32.740	541.32.840	541.28.340
	574	left	541.32.441	541.32.141	541.32.741	541.32.841	541.28.341
45	723	right	541.32.445	541.32.145	541.32.745	541.32.845	541.28.345
	723	left	541.32.446	541.32.146	541.32.746	541.32.846	541.28.346
50	884	right	541.32.450	541.32.150	541.32.750	541.32.850	541.28.350
	884	left	541.32.451	541.32.151	541.32.751	541.32.851	541.28.351
60	1,057	right	541.32.460	541.32.160	541.32.760	541.32.860	541.28.360
	1,057	left	541.32.461	541.32.161	541.32.761	541.32.861	541.28.361

Supplied With
2 Shelves
2 Posts
2 Soft close

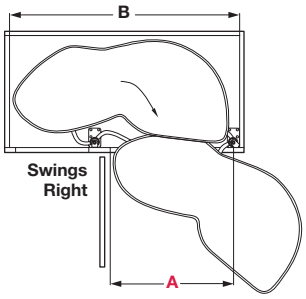

A = Clear opening dimension

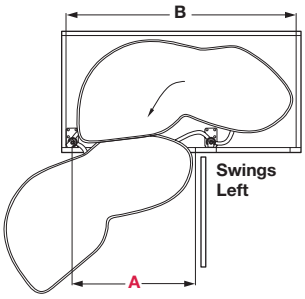

A = Clear opening dimension

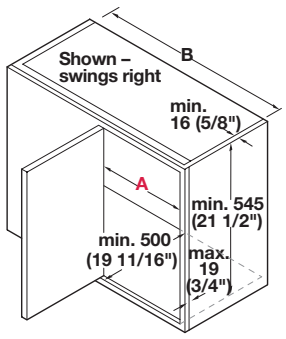

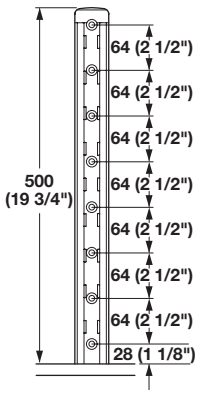

Model/Tray Shape	Framed A min.	Frameless A min.	B min.
40	355 mm (14")	362 mm (14 1/4")	780 mm (30 3/4")
45	410 mm (16 1/8")	419 mm (16 1/2")	820 mm (32 1/4")
50	450 mm (17 3/4")	467 mm (18 3/8")	920 mm (36 1/4")
60	540 mm (21 1/4")	565 mm (22 1/4")	965 mm (38")

Dimensional data not binding. Dimensions in mm, inches are approximate. We reserve the right to alter specifications without notice.

LeMans II

→ Angle Reduction Bracket

> Restricts the travel of LeMans when opening path is obstructed
> Material: Plastic

Color	Item No.
champagne	541.33.905

→ Filler Strip, optional

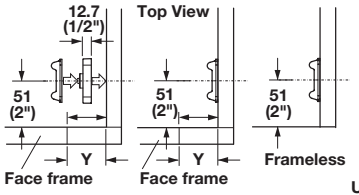

Y = Dim. from inside cabinet wall to edge of face frame

Use Filler Strip

Model	Y= 0-19 (3/4")	Y= 20-25 (13/16"-1")
40	1x	1x
45	1x	2x
50	–	1x
60	–	1x

> Please note required dimensions for when filler strips are needed
> W x D x H: 500 x 49 x 12.7 mm (19 3/4" x 1 7/8" x 1/2")
> Material: Plastic

Color	Item No.
gray	541.32.506

→ Highboard Post Kit

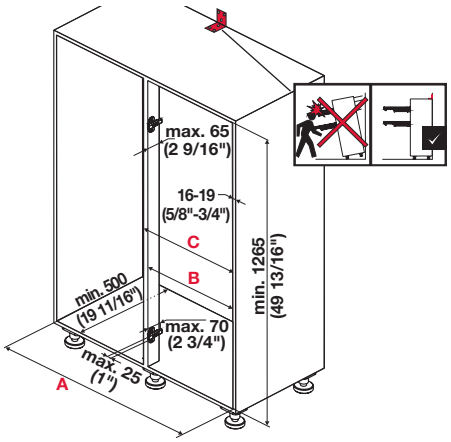

Model	A	B	C
45	min. 900 (35 3/8")	411 - 420 (16 3/16" - 16 1/2")	max. 451 (17 3/4")
50	min. 1000 (39 3/8")	463 - 470 (18 1/4" - 18 1/2")	max. 498 (19 5/8")

> Min. inside cabinet height: 1265 mm (50")
> Material: Steel/Plastic

Color	Item No.
champagne	541.30.473
white	541.30.773
silver	541.30.973

Note Order 2 LeMans II sets with the Post Kit.
All LeMans models can be used with the Post Kit.

Dimensional data not binding. Dimensions in mm, inches are approximate. We reserve the right to alter specifications without notice.

Magic Corner I

> With soft close
> Available in swings left or right applications
> The cabinet door mounts to the pull-out frame
> When the door is opened, it is pulled outward, then swiveled to the side along with the front trays while the back trays are simultaneously moved into the cabinet opening
> Approximate door opening angle: 75°
> Minimum door opening 396 mm (15 5/8") by using tray 295 mm (11 5/8") in front door position, 492 mm (19 3/8") with 390 mm (15 3/8") trays in front
> Storage capacity: – 1,001 in² using 295 x 470 mm (11 5/8" x 18 1/2") front and 390 x 470 mm (15 3/8" x 18 1/2") back
– 1,138 in² using 390 x 470 mm (15 3/8" x 18 1/2") front and back
Weight capacity per tray: back: 9 kg (20 lbs.); front: 6.8 kg (15 lbs.)

soft&silent

→ Frame

> Minimum opening height: 540 mm (21 1/4")
> Inside height: 525 mm (20 5/8")
> Material: Steel, powder-coated; Slide: Steel

A	B	C	Swing	champagne	silver
396–600 (15 5/8"–23 5/8")	500 (19 3/4")	974–1115 (38 3/8"–43 7/8")	right	546.17.417	546.17.917
			left	546.17.408	546.17.908

Supplied With
Mounting template

Note
Tray sets must be ordered separately. Mounting hardware is not included.

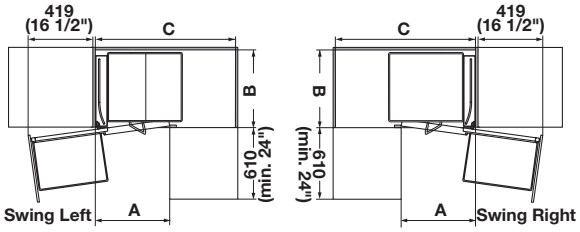

→ Arena Plus Tray Set

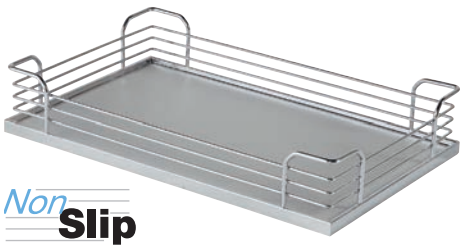

> W × H: 470 × 88 mm (18 1/2" × 3 1/2")
> Material: Melamine; Surround: Steel, powder-coated

Depth	maple/ champagne	maple/ chrome	white/ chrome	gray/ chrome
295 (11 5/8")	546.60.478	545.60.178	545.60.278	545.60.578
390 (15 3/8")	546.60.479	545.60.179	546.17.268	545.60.579
Supplied With	2 Trays	1 Tray	1 Tray	1 Tray

Dimensional data not binding. Dimensions in mm, inches are approximate. We reserve the right to alter specifications without notice.

Magic Corner I Fineline™ Boxes

> A beautiful combination of the warmth of wood with European functional hardware
> Combine with other Fineline interior cabinet accessories for a consistent design throughout your entire kitchen

Note
Design Patent #D894.653

→ Box

> W x H x D: 470 x 71 x 295 mm (18 1/2" x 2 13/16" x 11 5/8")

Material	Item No.
Birch	546.04.881
Walnut	546.04.781

Supplied With
1 Box

→ Box

> W x H x D: 470 x 71 x 390 mm (18 1/2" x 2 13/16" x 15 3/8")

Material	Item No.
Birch	546.04.882
Walnut	546.04.782

Supplied With
1 Box

→ Bracket Set

Material/Finish	For 295 mm (11 5/8") deep box	For 390 mm (15 3/8") deep box
Steel/silver	546.04.901	546.04.902
Steel/champagne	546.04.801	546.04.802
304 Stainless Steel/brushed	546.04.001	546.04.002

Supplied With
1 Set (LH/RH) metal brackets
4 Stainless steel barrel nuts

Dimensional data not binding. Dimensions in mm, inches are approximate. We reserve the right to alter specifications without notice.

Magic Corner II

> With soft close
> Requires minimum door opening of 520 mm (20 1/2") and additional clearance for door hinge
> Available in swings left or right applications
> Front trays pull out and swivel to a 90° open position while back trays are simultaneously moved to the cabinet opening
> Back trays slide forward individually providing total access
> Storage capacity: 1,138 in²
> Weight capacity per tray: back: 7.7 kg (17 lbs.), front: 9.97 kg (22 lbs.)

soft&silent

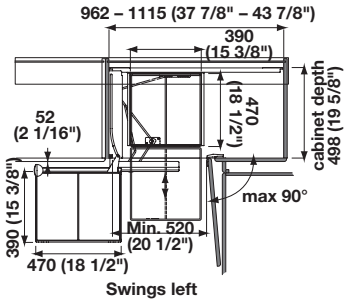

Swings left

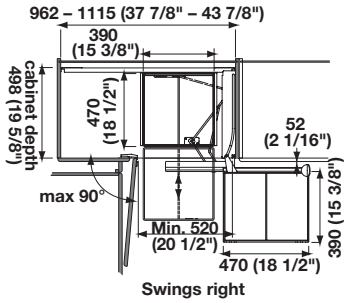

Swings right

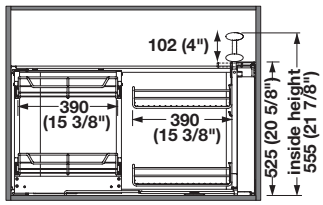

→ Frame

> For use with hinged door
> Inside height: 555 mm (21 7/8")
> Material: Steel, powder-coated

Swing	silver	champagne
Right	548.10.240	548.10.440
Left	548.10.241	548.10.441

Supplied With
Mounting instructions

Note
Traverse kit and mounting hardware are not included.

→ Arena Plus Tray Set

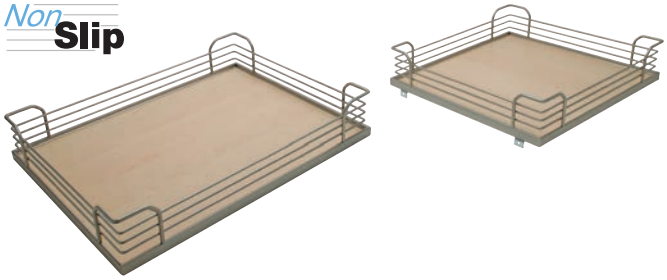

> W × D × H: Front: 390 × 470 × 88 mm (15 3/8" × 18 1/2" × 3 1/2")
> Back: 390 × 470 × 102 mm (15 3/8" × 18 1/2" × 4")
> Material: Melamine; Surround: Steel

Finish	Item No.
maple/champagne	548.11.466
maple/chrome	548.11.266
white/chrome	548.11.264
gray/chrome	548.11.566
anthracite/chrome	548.11.376

Supplied With 4 Trays, Traverse kit

Dimensional data not binding. Dimensions in mm, inches are approximate. We reserve the right to alter specifications without notice.

Magic Corner II Fineline™ Boxes

> A beautiful combination of the warmth of wood with European functional hardware
> Combine with other Fineline interior cabinet accessories for a consistent design throughout your entire kitchen

Note
Design Patent #D894.653

→ Traverse Set

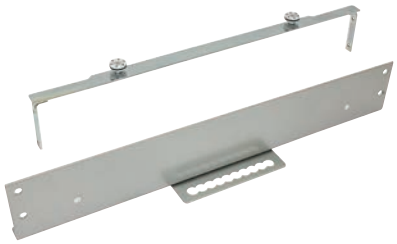

> Required when using Fineline boxes for Magic Corner II
> Material: Steel

Finish	Item No.
silver	548.10.290
champagne	548.10.890

→ Box

Material	Front - W x H x D: 470 x 71 x 390 mm (18 1/2" x 2 13/16" x 15 3/8")	Rear - W x H x D: 390 x 71 x 470 mm (15 3/8" x 2 13/16" x 18 1/2")
Birch	546.04.882	546.04.890
Walnut	546.04.782	546.04.790

Supplied With
1 Box

→ Bracket Set

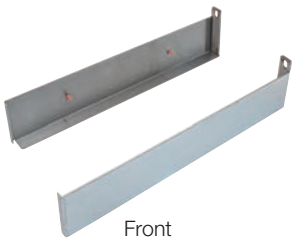

Material/ Finish	Front set for 390 mm (15 3/8") deep box	Rear set for 470 mm (18 1/2") deep box
Steel/silver	546.04.902	546.04.900
Steel/champagne	546.04.802	546.04.800
304 Stainless Steel/brushed	546.04.002	546.04.000

Supplied With
1 Set (LH/RH) metal brackets
4 Stainless steel barrel nuts

Dimensional data not binding. Dimensions in mm, inches are approximate. We reserve the right to alter specifications without notice.

This page is left blank intentionally.

Dimensional data not binding. Dimensions in mm, inches are approximate. We reserve the right to alter specifications without notice.

This page is left blank intentionally.

Dimensional data not binding. Dimensions in mm, inches are approximate. We reserve the right to alter specifications without notice.

Revo

- For frameless and face frame construction
- For front mounted internally revolving doors
- When opened, the folding doors are drawn inwards and revolve through the cabinet interior
- Please note the cabinet bottom must be positioned lower if the door is to match adjacent cabinetry
- Weight capacity: 25 kg (55 lbs.) per shelf evenly distributed
- Material: Steel, powder-coated

Finish	Item No.
silver RAL 9006	541.06.901

Supplied With
Brackets
Mounting instructions

Note
Mounting hardware is not included. Use with Arena Plus and Arena Style Three-quarter Round Shelves.

→ Arena Plus Three-quarter Round Shelf

- Easy to install shelves with heavy weight capacity
- For base units 914 × 914 mm (36" x 36")
- Ø: 810 mm (31 7/8")
- Material: Melamine; Surround: Steel

Finish	Item No.
maple/champagne	541.06.158
maple/chrome	541.06.958
white/chrome	541.06.758
gray/chrome	541.06.558
anthracite/chrome	541.06.285

Supplied With
2 Trays

Dimensional data not binding. Dimensions in mm, inches are approximate. We reserve the right to alter specifications without notice.

Twister

> For use in upper or wall corner cabinets
> No center post, axle is offset to side allowing for maximum storage
> Height adjustable post with adjustable shelves
> Weight capacity per shelf: 8 kg (18 lbs.)
> Ø: 500 mm (19 3/4")
> Material: Melamine; Surround and Post: Steel

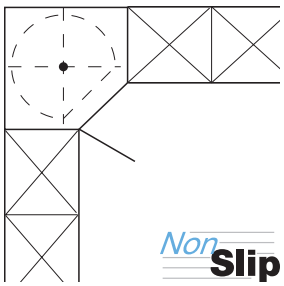

→ Arena Plus Set

Height	Number of shelves	maple/ champagne	maple/ chrome	white/ chrome	anthracite/ chrome
643–775 (25 15/16"–30 1/2")	2	542.91.812	542.91.112	542.92.212	542.90.332
813–927 (32"–36 1/2")	3	542.91.813	542.91.113	542.92.213	542.90.333
965–1073 (38"–42 1/4")	3	542.91.814	542.91.114	542.92.214	542.90.334

Supplied With
Shelves
Post
Mounting hardware

Dimensional data not binding. Dimensions in mm, inches are approximate. We reserve the right to alter specifications without notice.

Revolving Three-quarter Round Kidney

> Works with overlay and inset doors
> Shelves should be positioned above or below door hinges
> Post-mounted
> With self-centering cam and pin
> Material: Melamine; Surround: Steel, powder-coated

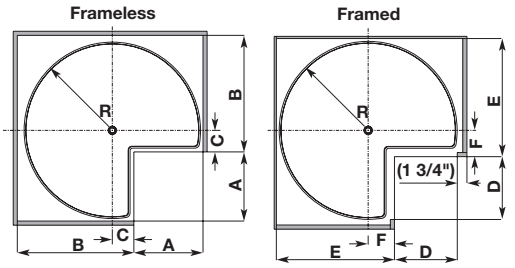

Non Slip

→ Arena Plus Shelf Set

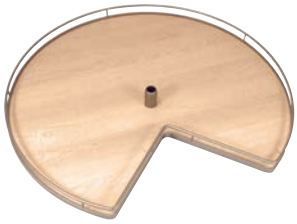

Size	Radius R	A	B	C	D	E	F	maple/ champagne	maple/ chrome	white/ chrome	anthracite/ chrome
711 (28")	355 (14")	294 (11 9/16")	444.5 (17 1/2")	74.5 (2 15/16")	268 (10 9/16")	464 (18 1/4")	94 (3 11/16")	541.11.812	541.11.112	541.11.212	541.06.296
813 (32")	410 (16 1/8")	321 (12 5/8")	527 (20 3/4")	102 (4")	269 (11 3/8")	546 (21 1/2")	121 (4 3/4")	541.11.813	541.11.113	541.11.213	541.06.297

Supplied With 2 Shelves

Note Use with posts below.

→ Tripod Center Post

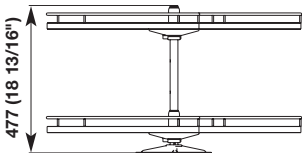

> With stand for cabinet bottom mounting
> Internal height min: 477 mm (18 13/16")
> Can be retrofitted into existing cabinets
> Material: Steel, plated; Bearing: Plastic

Finish	Item No.
matt nickel	541.56.891
chrome	541.46.291

→ Center Post

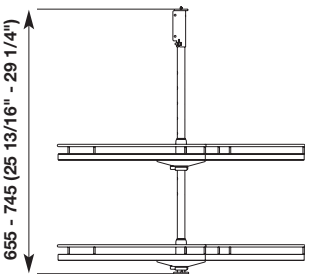

> Height adjustable 655 – 745 mm (25 13/16" – 29 1/4")
> Must be mounted to top and bottom shelf of cabinet
> Material: Steel

Finish	Item No.
matt nickel	541.17.226
chrome	541.17.227

Dimensional data not binding. Dimensions in mm, inches are approximate. We reserve the right to alter specifications without notice.

Super Susan

> Bearings are pre-mounted
> Shelf-mounted
> Entire floor space of shelf can be used
> For use behind hinged doors
> Material: Melamine; Surround: Steel, powder-coated

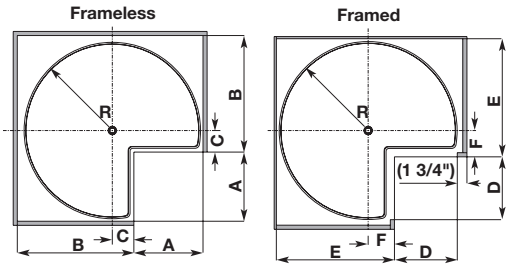

Non Slip

→ Arena Plus Shelf Set

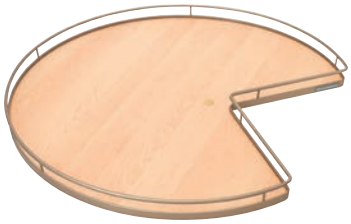

Size	Radius R	A	B	C	D	E	F	maple/ champagne	maple/ chrome	white/ chrome	anthracite/ chrome
711 (28")	355 (14")	294 (11 9/16")	444.5 (17 1/2")	74.5 (2 15/16")	268 (10 9/16")	464 (18 1/4")	94 (3 11/16")	541.11.852	541.11.152	541.11.252	541.06.266
813 (32")	410 (16 1/8")	321 (12 5/8")	527 (20 3/4")	102 (4")	269 (11 3/8")	546 (21 1/2")	121 (4 3/4")	541.11.853	541.11.153	541.11.253	541.06.267

Supplied With
2 Shelves with bearings

Note
The 711 mm (28") version will fit in a 838 mm (33") corner cabinet; The 813 mm (32") version will fit in a 914 mm (36") corner cabinet.

Dimensional data not binding. Dimensions in mm, inches are approximate. We reserve the right to alter specifications without notice.

Häfele Three-quarter Revolving Shelves

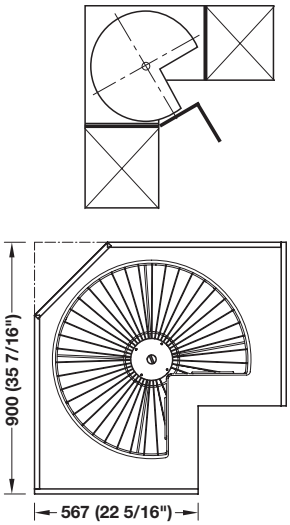

> For corner base unit 900 x 900 mm (35 7/16” x 35 7/16”) with overlay doors
> Shelves revolve independently
> Screw mounted
> Internal height: 680–689 mm (26 3/4"–27 1/8")
> Shelf Ø: 714 (26 3/4")
> Weight capacity per shelf: 20 kg (45 lbs.)
> Material: Steel; Finish: chrome-plated
Bearings: Plastic; Color: anthracite

	Item No.
	542.15.210

Supplied With
Post
2 shelves
Height compensation bearing
Top axle bearing
Lower axle bearing

Dimensional data not binding. Dimensions in mm, inches are approximate. We reserve the right to alter specifications without notice.

This page is left blank intentionally.

Dimensional data not binding. Dimensions in mm, inches are approximate. We reserve the right to alter specifications without notice.

Revolving Shelves

> For use behind hinged doors

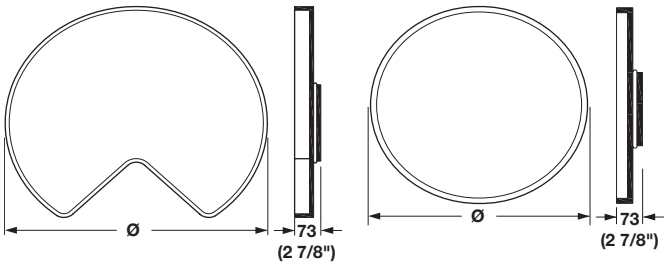

→ Kidney Shelf

> Shelf mounted
> With pre-attached hardware
> Material: Birch

Ø	Item No.
610 (24")	542.58.125
711 (28")	542.58.122
813 (32")	542.58.123

→ Kidney Shelf Set

> Pole mounted
> Shelf height can be adjusted to clear door hinges
> Height: 660 – 812 mm (26" – 32")
> Material: Birch

Ø	Item No.
610 (24")	542.58.135
711 (28")	542.58.132
813 (32")	542.58.133

→ Full Round Shelf

> Shelf mounted
> With pre-attached hardware
> Material: Birch

Ø	Item No.
457 (18")	542.58.141
508 (20")	542.58.144
610 (24")	542.58.145
711 (28")	542.58.142

→ Full Round Shelf Set

> Pole mounted
> Shelf height can be adjusted to clear door hinges
> Height: 660 – 812 mm (26"-32")
> Material: Birch

Ø	Item No.
457 (18")	542.58.151
508 (20")	542.58.154
610 (24")	542.58.155
711 (28")	542.58.152

Dimensional data not binding. Dimensions in mm, inches are approximate. We reserve the right to alter specifications without notice.

Lazy Susans

> Tested to 100,000 cycles
> Made in USA
> Telescopic post adjusts without tools
> Anti-slip ribs for sliding resistance
> Shelves are safely secured with a steel pin through the post
> Rigid double wall tray construction guarantees a heavy weight carrying capacity
> Top and bottom shelf height adjustment
> Single bump stop
> Inside shelf rim height: 28 mm (1 1/8")
> Weight capacity per shelf: 457 mm (18") - 12.7 kg (28 lbs.)
> 610 mm (24") - 22.6 kg (50 lbs.)
> 710 mm (28") - 31.7 kg (70 lbs.)
> Door height adjustment (± 5 mm) without tools
> For revolving door applications
> Post fits inside cabinet heights: 660–813 mm (26"–32")
> Material: Polypropylene; Color: white; Post: Steel; Finish: chrome

→ Pie-Cut Lazy Susan

Ø	Item No.
457 (18")	542.94.751
610 (24")	542.94.752
711 (28")	542.94.754

Supplied With
2 Shelves
Post

Shelves attached to revolving door

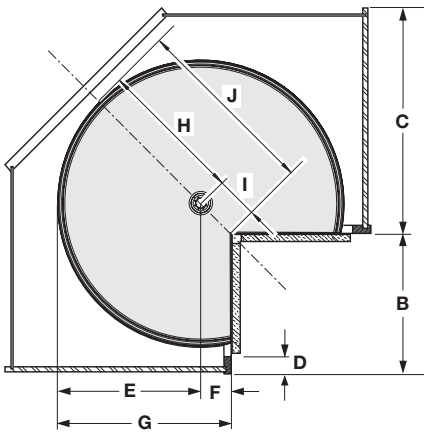

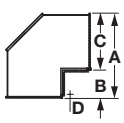

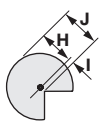

A	B	C	D (max.)		E	F	G	H	I	J
838 (33")	209 (9")	610 (24")	44 (1 3/4")	457 (18")	230 (9 1/16")	35 (1 3/8")	265 (10 7/16")	230 (9 1/16")	49 (1 15/16")	279 (11")
914 (36")	305 (12")	610 (24")	44 (1 3/4")	610 (24")	300 (11 13/16")	40 (1 5/8")	341 (13 7/16")	300 (11 13/16")	59 (2 5/16")	359 (14 1/8")
914 (36")	305 (12")	610 (24")	44 (1 3/4")	711 (28")	351 (13 13/16")	91 (3 9/16")	442 (17 3/8")	351 (13 13/16")	128 (5 1/16")	480 (18 7/8")

Dimensional data not binding. Dimensions in mm, inches are approximate. We reserve the right to alter specifications without notice.

Lazy Susans

> Tested to 100,000 cycles
> Made in USA
> Telescopic post adjusts without tools
> Anti-slip ribs for sliding resistance
> Shelves are safely secured with a steel pin through the post
> Rigid double wall shelf construction guarantees a heavy weight carrying capacity
> Top and bottom shelf height adjustment
> Single bump stop
> For hinged door applications
> Shelves rotate independently
> Inside shelf rim height: 28 mm (1 1/8")
> Weight capacity per shelf: 457 mm (18") - 12.7 kg (28 lbs.)
610 mm (24") - 22.6 kg (50 lbs.)
710 mm (28") - 31.7 kg (70 lbs.)
813 mm (32") - 43 kg (95 lbs.)
> Material: Polypropylene; Color: white; Post: Steel; Finish: chrome

→ Kidney Two Shelf Set

> Post fits inside cabinet heights: 660–813 mm (26"–32")

Ø	Item No.
457 (18")	542.94.701
610 (24")	542.94.703
711 (28")	542.94.704
813 (32")	542.94.705

Supplied With
2 Shelves, Post

For 90° corner cabinet with hinged, bi-fold door

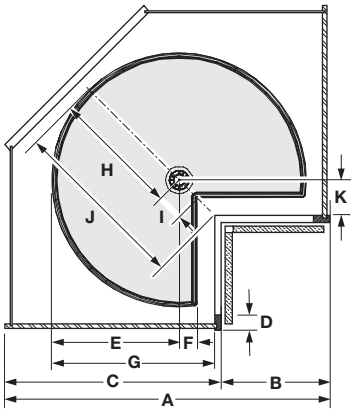

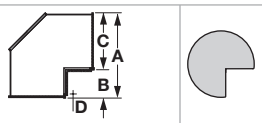

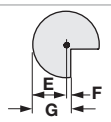

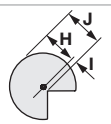

A	B	C	D (max.)		E	F	G	H	I	J	K
610 (24")	305 (12")	305 (12")	44 (1 3/4")	457 (18")	230 (9 1/16")	32 (1 1/4")	257 (10 1/16")	230 (9 1/16")	49 (1 15/16")	267 (10 1/2")	25 (1")
686 (27")	305 (12")	381 (15")	44 (1 3/4")	610 (24")	300 (11 13/16")	40 (1 9/16")	338 (13 5/16")	300 (11 13/16")	60 (2 3/8")	354 (13 15/16")	38 (1 1/2")
838 (33")	229 (9")	610 (24")	44 (1 3/4")	610 (24")	300 (11 13/16")	76 (3")	402 (15 13/16")	300 (11 13/16")	111 (4 3/8")	443 (17 7/16")	102 (4")
914 (36")	305 (12")	610 (24")	44 (1 3/4")	610 (24")	300 (11 13/16")	40 (1 9/16")	338 (13 5/16")	300 (11 13/16")	60 (2 3/8")	354 (13 15/16")	38 (1 1/2")
914 (36")	305 (12"	610 (24")	44 (1 3/4")	711 (28")	349 (13 3/4")	51 (2")	441 (17 3/8")	349 (13 3/4")	73 (2 7/8")	422 (16 5/8")	90 (3 9/16")
991 (39")	381 (15")	610 (24")	44 (1 3/4")	711 (28")	349 (13 3/4")	51 (2")	441 (17 3/8")	349 (13 3/4")	73 (2 7/8")	422 (16 5/8")	90 (3 9/16")
1067 (42")	457 (18")	610 (24")	44 (1 3/4")	813 (32")	410 (16 1/8")	90 (3 9/16")	511 (20 1/8")	410 (16 1/8")	127 (5")	552 (21 3/4")	102 (4")

Dimensional data not binding. Dimensions in mm, inches are approximate. We reserve the right to alter specifications without notice.

Lazy Susans

> Tested to 100,000 cycles
> Made in USA
> Telescopic post adjusts without tools
> Anti-slip ribs for sliding resistance
> Shelves are safely secured with a steel pin through the post
> Rigid double wall shelf construction guarantees a heavy weight carrying capacity
> Top and bottom shelf height adjustment
> Single bump stop
> Inside shelf rim height: 28 mm (1 1/8")
> For hinged door applications
> Shelves rotate independently
> Weight capacity per shelf: 457 mm (18") - 12.7 kg (28 lbs.)
610 mm (24") - 22.6 kg (50 lbs.)
710 mm (28") - 31.7 kg (70 lbs.)
813 mm (32") - 43 kg (95 lbs.)
> Material: Polypropylene; Color: white; Post: Steel; Finish: chrome

→ Full Round Two Shelf Set

> Post fits inside cabinet heights: 660–813 mm (26"–32")

Ø	Item No.
457 (18")	542.96.701
610 (24")	542.96.702
711 (28")	542.96.704
813 (32")	542.96.705

Supplied With
2 Shelves
Post

For 45° hinged corner door

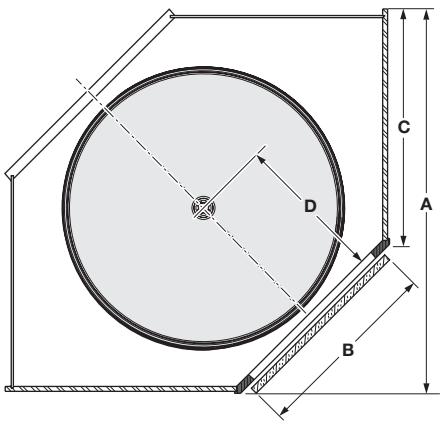

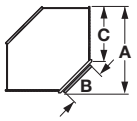

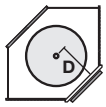

A	B	C			D
610 (24")	432 (17")	305 (12")	457 (18")	460 (18 1/8")	244 (9 5/8")
686 (27")	432 (17")	381 (15")	457 (18")	460 (18 1/8")	244 313 (9 5/8")
838 (33")	330 (13")	610 (24")	610 (24")	600 (23 5/8")	313 (12 5/16")
914 (36")	432 (17")	610 (24")	711 (28")	721 (28 3/8")	378 (14 7/8")
991 (39")	533 (21")	610 (24")	711 (28")	721 (28 3/8")	378 (14 7/8")
1067 (42")	648 (25 1/2")	610 (24")	813 (32")	821 (32 5/16")	424 (16 11/16")

Dimensional data not binding. Dimensions in mm, inches are approximate. We reserve the right to alter specifications without notice.

Hailo US Cargo

> For face frame, inset door, and frameless door applications
> Easy to install clip-on frame; sturdy metal lid, suitable as shelf
> Smaller bin for bio-bin, dog/cat food, or plastic bags (US Cargo 15 and 18 only)
> 130,000 cycle tested
> Full extension slides with overtravel; side wall mounted
> Weight capacity: 54.4 kg (120 lbs.)
> Material: Frame and cover: Steel, powder-coated
Bin: Plastic; Color: light gray

soft&silent

→ US Cargo 24

> Inside cabinet area: W x H x D: 571–585 x 533 x 568 mm (22 1/2"–23 1/16" x 21" x 22 3/8")
> Minimum inside face frame clearance: 533 mm (21")
> Capacity: 2 x 37 quarts; 2 x 10.6 quarts
> Material: Frame and cover: Steel, powder-coated
Bin: Plastic; Color: light gray

Finish	Item No.
dark silver gray	502.74.535

→ US Cargo 21

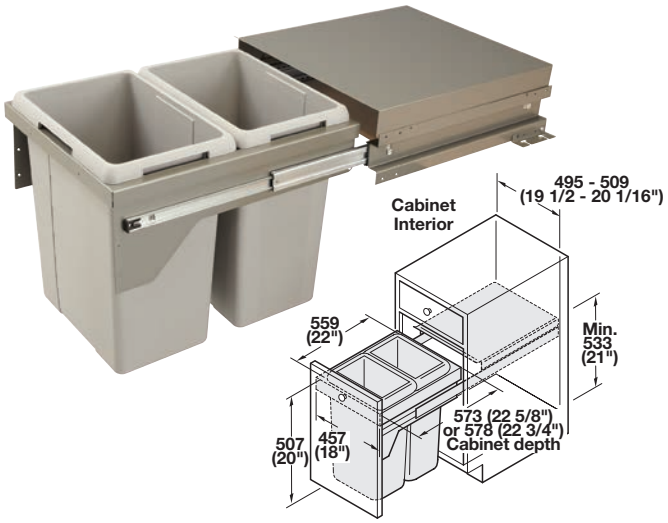

> With soft close
> Inside cabinet area: W x H: 495–509 x 533 mm (19 1/2"–20 1/16" x 21")
> Minimum inside face frame clearance: 457 mm (18")
> Capacity: 2 x 44.4 quarts
> Material: Frame and cover: Steel, powder-coated
Bin: Plastic; Color: light gray

Finish	Depth	Item No.
silver	573 (22 5/8")	502.74.573
champagne	578 (22 3/4")	502.74.852

Dimensional data not binding. Dimensions in mm, inches are approximate. We reserve the right to alter specifications without notice.

Hailo US Cargo

→ US Cargo 18

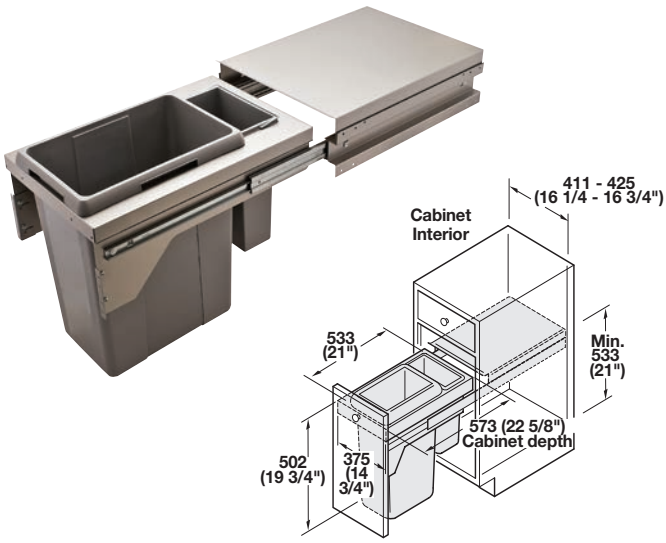

> With soft close
> Inside cabinet area: W x H x D: 413–425 × 533 x 573 mm
(16 1/4"–16 3/4" x 21" x 22 5/8")
> Minimum inside face frame clearance: 375 mm (14 3/4")
> Capacity: 1 x 44.4 quarts; 1 x 7.4 quarts

Finish	Item No.
champagne	502.74.813
silver	502.74.571

→ US Cargo 15

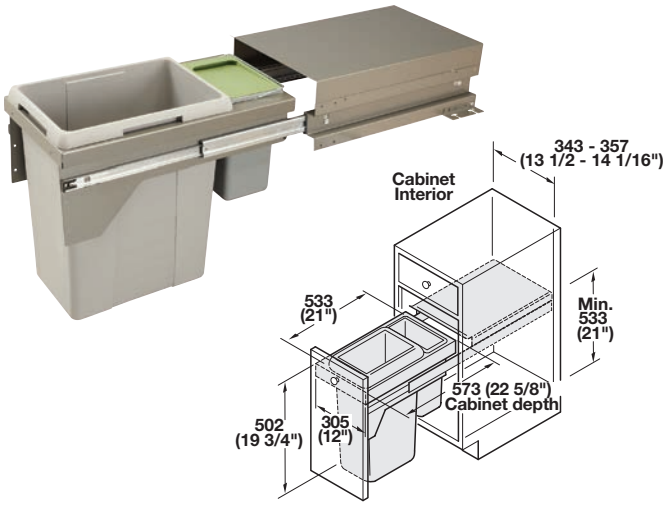

> With soft close
> Inside cabinet area: W x H x D: 343–357 × 533 x 575 mm
(13 1/2"–14 1/16" x 21" x 22 5/8")
> Minimum inside face frame clearance: 305 mm (12")
> Capacity: 1 x 44.4 quarts; 1 x 9 quarts

Finish	Item No.
champagne	502.74.812
silver	502.74.222

→ Replacement Bins

> Material: Plastic; Color: light gray

Capacity	Item No.
7.4 quarts	502.70.980
9 quarts	502.70.930
44.4 quarts	502.74.900

Dimensional data not binding. Dimensions in mm, inches are approximate. We reserve the right to alter specifications without notice.

Hailo US Cargo - Face Frame

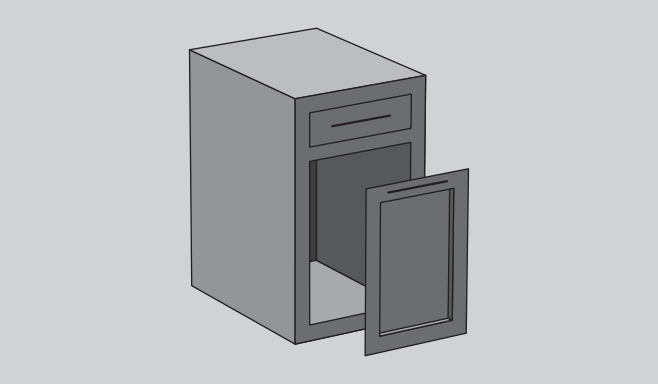

> For face frame cabinets
> Side mounted
> Fits below a drawer
> With synchronized soft close progressive slides
> For side wall thickness: 12–19 mm (1/2"–3/4")
> Required inside cabinet depth behind face frame: 570 mm (22")
> System depth: 569 mm (22")
> System height: 521 mm (20 1/2")
> Weight capacity: 50 kg (110 lbs.)
> Cycle test: 100,000
> Material: Lid & Frame: Steel; Finish: silver powder-coated
Bins: Plastic; Finish: light gray

Supplied With Lid

Note Overlay door bracket kit is required for full overlay applications.

→ US Cargo FF 15

> Cabinet width: 380 mm (15")
> Inside width range: 343–357 mm (13 1/2"–14 1/16")
> Capacity: 1 x 39 quarts/1 x 15.9 quarts

	Item No.
	502.77.521

→ US Cargo FF 18

> Cabinet width: 457 mm (18")
> Inside width range: 419–433 mm (16 1/2"–17 1/16")
> Capacity: 1 x 39 quarts/1 x 15.9 quarts

	Item No.
	502.77.522

→ US Cargo FF 21

> Cabinet width: 533 mm (21")
> Inside width range: 495–509 mm (19 1/2"–20 1/16")
> Capacity: 2 x 44.4 quarts

	Item No.
	502.77.523

→ US Cargo FF 24

> Cabinet width: 610 mm (24")
> Inside width range: 572–586 mm (22 1/2"–23 1/16")
> Capacity: 2 x 44.4 quarts

	Item No.
	502.77.524

→ Overlay Door Bracket Kit

> For full overlay applications

	Item No.
	502.77.990

Dimensional data not binding. Dimensions in mm, inches are approximate. We reserve the right to alter specifications without notice.

HÄFELE

Hailo US Cargo - Full Access

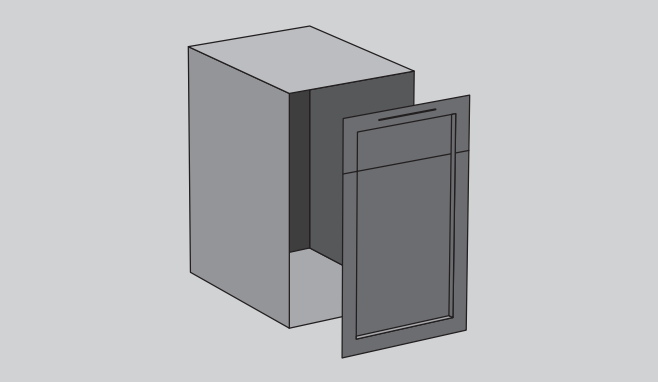

> For full access cabinets
> Side mounted
> Fits below a drawer
> With synchronized soft close progressive slides
> For side wall thickness: 16–19 mm (5/8"–3/4")
> Required inside cabinet depth: 570 mm (22")
> System depth: 569 mm (22")
> System height: 521 mm (20 1/2")
> Weight capacity: 50 kg (110 lbs.)
> Cycle test: 100,000
> Material: Lid & Frame: Steel; Finish: silver powder-coated
Bins: Plastic; Finish: light gray

Supplied With
Lid

→ US Cargo FL 15

> Cabinet width: 380 mm (15")
> Inside width range: 349–342 mm (13 3/4"–13 1/2")
> Capacity: 1 x 39 quarts/1 x 15.9 quarts

	Item No.
	502.77.531

→ US Cargo FL 18

> Cabinet width: 457 mm (18")
> Inside width range: 425–419 mm (16 3/4"–16 1/2")
> Capacity: 2 x 39 quarts

	Item No.
	502.77.532

→ US Cargo FL 21

> Cabinet width: 533 mm (21")
> Inside width range: 502–572 mm (19 3/4"–19 1/2")
> Capacity: 2 x 44.4 quarts

	Item No.
	502.77.533

→ US Cargo FL 24

> Cabinet width: 610 mm (24")
> Inside width range: 578–572 mm (22 3/4"–22 1/2")
> Capacity: 2 x 44.4 quarts

	Item No.
	502.77.534

Dimensional data not binding. Dimensions in mm, inches are approximate. We reserve the right to alter specifications without notice.

Hailo Euro Cargo

> Sturdy metal lid, suitable as shelf
> With telescopic over extension ball bearing slides
> 100,000 cycle tested
> Weight capacity: 49.8 kg (110 lbs.)
> Material: Lid & Frame: Steel, powder-coated; Bins: Plastic

soft&silent

→ Euro Cargo 30 S

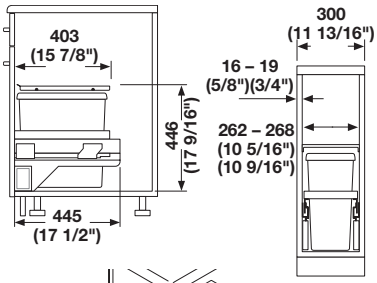

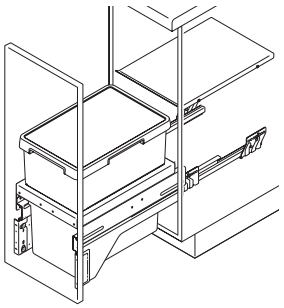

> Inside cabinet area:
> W × D × H: 262–268 × 445 × 446 mm
(10 5/16"–10 9/16" × 17 1/2" × 17 9/16")
> Capacity: 31.7 quarts

Frame	Bin	Item No.
silver gray	light gray	502.73.900

→ Euro Cargo 45

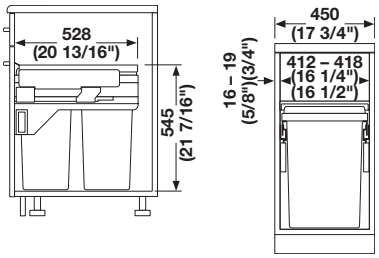

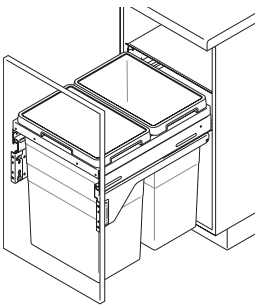

> Inside cabinet area:
> W × D × H: 412–418 × 528 × 545 mm
(16 1/4"–16 1/2" × 20 13/16" × 21 7/16")
> Capacity: 2 x 40.15 quarts (80.3 quarts)

Frame	Bin	Item No.
silver gray	light gray	503.70.532

Dimensional data not binding. Dimensions in mm, inches are approximate. We reserve the right to alter specifications without notice.

Hailo Euro Cargo

→ Euro Cargo 60

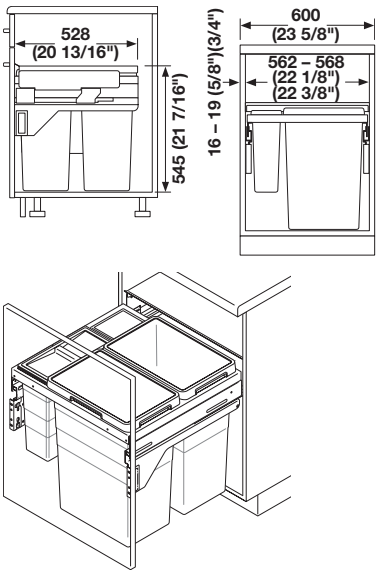

> Inside cabinet area:
> W × D × H: 562–568 × 528 × 545 mm
(22 1/8"–22 3/8" × 20 13/16" × 21 7/16")
> Capacity: 2 x 40.15 quarts (80.3 quarts), 1 x 12.6 quarts and 1 x 2.6 quarts
> Material: Lid & Frame: Steel, powder-coated; Bins: Plastic

Frame	Bin	Item No.
silver gray	light gray	503.70.555

→ Hailo Euro-Cargo-S

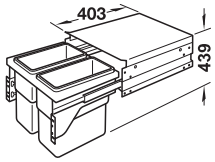

> For internal cabinet depth: min. 450 mm (17 11/16")
> Full extension with soft and self-closing mechanisms
> Screw mounts to side panel
> Side panel thickness: 16–19 mm (5/8"–3/4"), self-adjusting
> D x H: 403 x 439 mm (15 7/8" x 17 1/4")
> Two compartment waste bin
> Material: Extension Element: Steel; Finish: silver gray
Bins: Plastic; Finish: light gray

For cabinet width	Width	Capacity	Item No.
450 (17 1/16")	412–418 (16 7/32'–16 7/16")	2 x 21.1 quarts	502.73.901
600 (23 5/8")	562–568 (22 1/8"–22 11/32")	1 x 31.7 quarts 2 x 13.7 quarts	502.73.906
600 (23 5/8")	562–568 (22 1/8"–22 11/32")	2 x 31.7 quarts	502.73.902

→ Replacement Bins

> For Euro Cargo 30 S, 45 & 60
> Plastic; Color: light gray

Capacity	Item No.
2.6 quarts	503.70.990
12.6 quarts	503.70.991
31.7 quarts	502.73.991
40.15 quarts	502.73.992

Dimensional data not binding. Dimensions in mm, inches are approximate. We reserve the right to alter specifications without notice.

Hailo Libero 3.0

- For base cabinets from 304–1219 mm (12"–48") wide
- Put your foot under the sensor and lift to activate the unit
- Mounts in the front section of the bottom panel
- Easy operation by foot sensor
- Integrated light can be dimmed or switched off when on it indicates the sensor position
- Push out force is adjustable
- No accidental openings
- Intelligent controls identify obstacles via integrated friction clutch
- Low voltage device, 5v input, with Micro-USB socket
- Consumption: <10w, Standby: <1w
- Power supply: 110v – 230v with 6 ft. power cable
- Splash-proof according to IP 21
- Material: Plastic

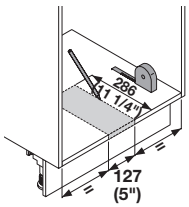

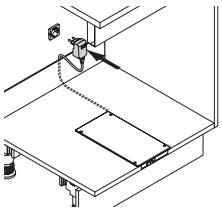

→ Hands Free Door Opener

Color	Item No.
light gray	502.15.117

Supplied With
Opener
Wall plug
6 ft. cable

Note
Settings and adjustments available through your wi-fi enabled device.

Dimensional data not binding. Dimensions in mm, inches are approximate. We reserve the right to alter specifications without notice.

Grass Sensomatic

→ Electronic Waste Bin Auto Open Kit

> Surface mounts to the cabinet floor
> Material: Plastic

	Item No.
	553.00.430

Note
Waste bin pull-out must be ordered separately.

Dimensional data not binding. Dimensions in mm, inches are approximate. We reserve the right to alter specifications without notice.

Häfele MX Pull-Out Bottom Mount

> Double wall steel frame system provides heavy duty structure and a stylish design
> Unit comes pre-assembled with bins included
> Bottom mount unit designed for face frame or frameless cabinets
> 6 way door front adjustment
> Melamine bottom and back with edgebanding
> Full extension progressive action runners with 49.8 kg (110 lb.) weight capacity
> Quick mounting, bottom bracket rests against back of face frame (19 mm (3/4") from front edge)
> Minimum opening width: Face frame – 305 mm (12")
Frameless – 324 mm (12 3/4")
With door brackets reversed for full overlay 5 piece doors – 343 mm (13 1/2")
> Minimum height of opening: 36 and 27 qts. – 489 mm (19 1/4")
52 qts. – 610 mm (24")
> Minimum inside depth: 554 mm (21 13/16")
> Material: Steel; Bottom & Back: Melamine; Bin: Plastic

Note
Add your door thickness for inset applications.
For replacement bins, see page **3.29**.

soft&silent

Service+

→ Matrix

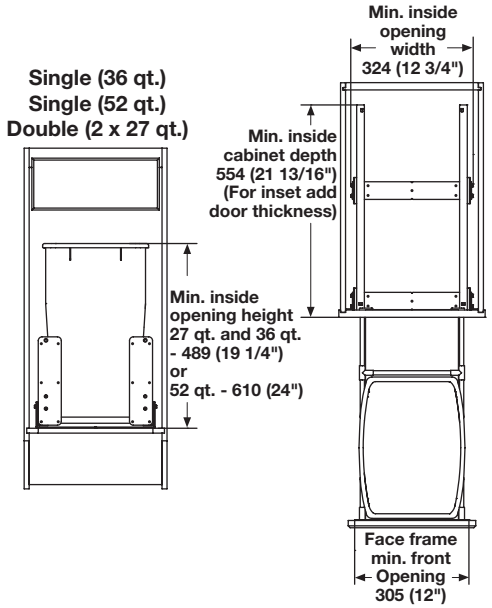

→ Single Bin

Frame	Bottom & back	Bin	36 qts.	52 qts.
white	white	white	503.15.721	503.15.723
anthracite	black	gray	503.15.221	503.15.223
champagne	maple	champagne	503.15.821	503.15.823

Supplied With
Mounting screws
Mounting instructions

→ Double Bins

> Capacity: 2 x 27 qts. (54 qts.)

Frame	Bottom & back	Bin	Item No.
white	white	white	503.15.731
anthracite	black	white	503.15.231
champagne	maple	white	503.15.831

Supplied With
Mounting screws
Mounting instructions

Dimensional data not binding. Dimensions in mm, inches are approximate. We reserve the right to alter specifications without notice.

Häfele MX Pull-Out Bottom Mount

Service+

→ Double Bin Units

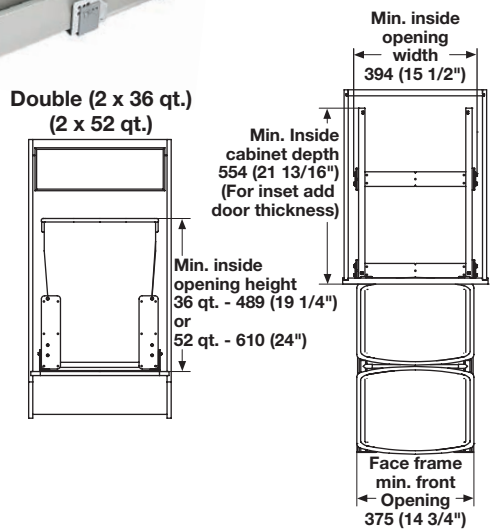

- > Minimum opening width: Face frame – 375 mm (14 3/4")
  Frameless – 394 mm (15 1/2")
  With door brackets reversed for full overlay 5 piece doors – 413 mm (16 1/4")
- > Minimum height of opening: 36 and 52 qts. – 489 mm (19 1/4")
  52 qts. – 610 mm (24")
- > Minimum inside depth: 554 mm (21 13/16")
- > Material: Steel; Bottom & Back: Melamine; Bin: Plastic

Frame	Bottom & back	Bin	2 x 36 qts.	2 x 52 qts.
white	white	white	503.15.722	503.15.724
anthracite	black	gray	503.15.222	503.15.224
champagne	maple	champagne	503.15.822	503.15.824

Supplied With
Mounting screws
Mounting instructions

→ Single Bin

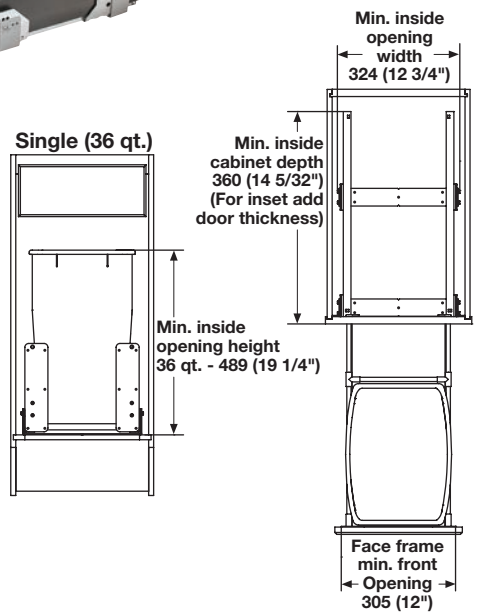

- > Minimum opening width: Face frame – 305 mm (12")
  Frameless – 324 mm (12 3/4")
  With door brackets reversed for full overlay 5 piece doors – 343 mm (13 1/2")
- > Minimum height of opening: 489 mm (19 1/4")
- > Minimum inside depth: 360 mm (14 3/16")
- > Capacity: 36 quarts
- > Material: Steel; Bottom & Back: Melamine; Bin: Plastic

Frame	Bottom & back	Bin	Item No.
white	white melamine	white	503.15.729
anthracite	black melamine	gray	503.15.529

Supplied With
Mounting screws
Mounting instructions

Note
Add your door thickness for inset applications.

Dimensional data not binding. Dimensions in mm, inches are approximate. We reserve the right to alter specifications without notice.

Pull-Out Bottom Mount

> Quick installation with drilling template for floor and door
> Easy front adjustment in all directions
> For cabinets with overlay or inset doors
> With “V-Rail” reinforced side rails for more stability on full height doors
> Optional “auto open” feature; a simple nudge gently opens the unit
> For use in face frame or frameless cabinets
> Weight capacity: 45 kg (100 lbs.)
> Material: Steel, powder-coated; Bin: Plastic

Note
For replacement bins, see next page.

soft&silent

→ Frame with Single Waste Bin

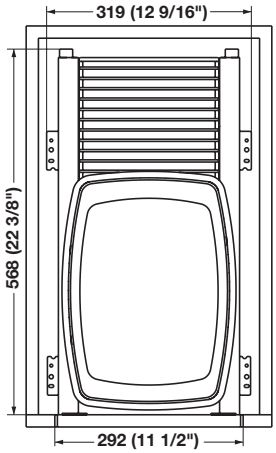

> Minimum height of opening: 36 qts. – 489 mm (19 1/4")
> 52 qts. – 610 mm (24")
> Minimum opening width: Face frame – 292 mm (11 1/2")
> Frameless – 319 mm (12 9/16")
> Actual width of sliding unit: 283 mm (11 1/8")
> W × D × H: 292 × 568 × 254 mm (11 1/2" × 22 3/8" × 10")

Frame	Bin	36 qts.	52 qts.	Bulk
chrome	white	502.56.220	502.56.222	502.56.230
silver	gray	502.56.920	502.56.922	502.56.930
champagne	champagne	502.56.820	502.56.822	502.56.830

Note
Bulk pack supplied with 16 pcs.; bins are not included.

→ Frame with Double Waste Bins

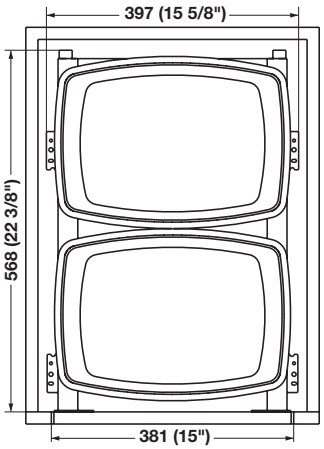

> Minimum height of opening: 36 qt. – 489 mm (19 1/4")
> 52 qt. – 610 mm (24")
> Minimum width of opening: Face frame – 381 mm (15")
> Frameless – 397 mm (15 5/8")
> Actual width of sliding unit: 372 mm (14 5/8")
> W × D × H: 355 × 568 × 254 mm (14" × 22 3/8" × 10")

Frame	Bin	2 x 36 qts.	2 x 52 qts.	Bulk
chrome	white	502.56.240	502.56.242	502.56.250
silver	gray	502.56.940	502.56.942	502.56.950
champagne	champagne	502.56.840	502.56.842	502.56.850

Note
Bulk pack supplied with 16 pcs.; bins are not included.

Dimensional data not binding. Dimensions in mm, inches are approximate. We reserve the right to alter specifications without notice.

Pull-Out Bottom Mount

→ Push To Open Kit

> Mechanical operation; no need for electricity
> No change to pull-out installation required
> Easy to retrofit with Kesseböhmer V-Rail
> Operates with or without door handles
> Material: Steel

Finish	Item No.
silver	502.56.998
champagne	502.56.999

→ Replacement Waste Bins

> W x D x H: 36 qts.: 356 x 267 x 450 mm (14" x 10 1/2" x 18")
> 52 qts.: 356 x 267 x 555 mm (14" x 10 1/2" x 22")
> 25.5 qts.: 267 x 267 x 450 mm (10 1/2" x 10 1/2" x 18")
> Material: Plastic

Color	25.5 qts.	36 qts.	52 qts.
white	503.88.725	503.88.721	503.88.724
gray	503.88.525	503.88.521	503.88.524
champagne	503.88.125	503.88.121	503.88.124

→ Waste Bin Lids

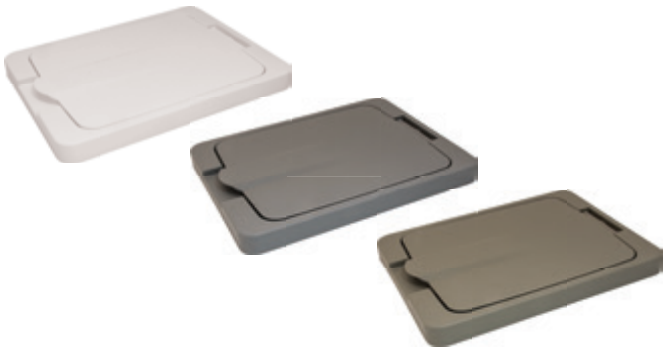

> Helps trap odors in the waste bin
> L x W x H: 360 x 274 x 35 mm (14 3/16" x 10 13/16" x 1 3/8")
> Material: Plastic

Color	Item No.
white	503.88.789
gray	503.88.589
champagne	503.88.189

Note
Can be used with 36 qt. or 52 qt. waste bins.
Recommended to use one lid per waste pull-out (on the front bin in double bin applications).

Dimensional data not binding. Dimensions in mm, inches are approximate. We reserve the right to alter specifications without notice.

Salice Pull-Out

> Bottom or side mount
> Full extension
> Easy installation with 4 screws
> Waste bins feature integrated handles for easy removal
> Door mount brackets and clip handle included
> Weight capacity: 34 kg (75 lbs.)
> Material: Steel; Bin: Plastic

soft&silent

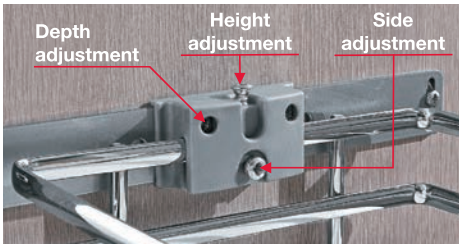

Door-mount bracket patented system features 3 way adjustability for alignment of the cabinet door: height: (+/-2 mm), side (+/-3 mm), depth (+/-4 mm)

> Easy installation with 2 screws
> Suitable for standard and five piece doors
> Adjustment via #2 pozi driver

→ Single Bin Unit 12"

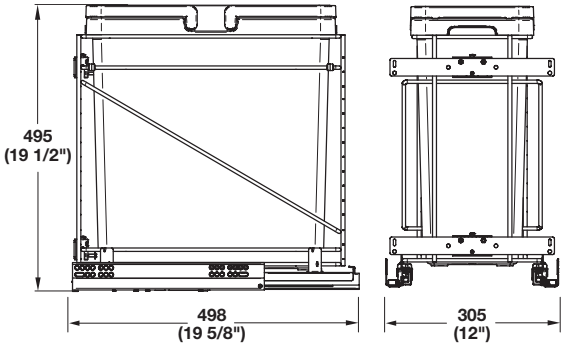

> For 305 mm (12") opening
> W x D x H: 305 x 498 x 495 mm (12" x 19 5/8" x 19 1/2")
> Capacity: 35 quarts

Frame	Bin	Salice No.	Item No.
chrome	silver	QPAM12135C	503.00.520

Supplied With
Mounting screws
Mounting instructions

→ Double Bin Unit 15"

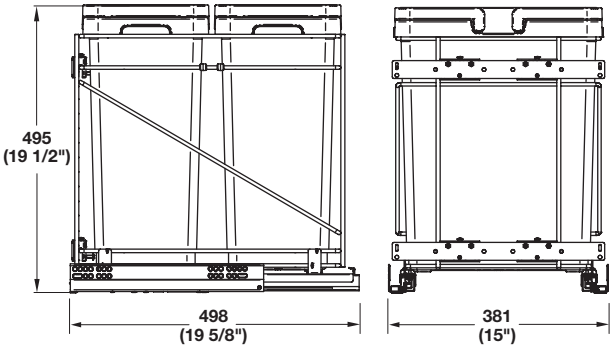

> For 381 mm (15") opening
> W x D x H: 381 x 498 x 495 mm (15" x 19 5/8" x 19 1/2")
> Capacity: 2 x 32 quarts (64 quarts)

Frame	Bin	Salice No.	Item No.
chrome	silver	QPAM15228C	503.00.521

Supplied With
Mounting screws
Mounting instructions

Dimensional data not binding. Dimensions in mm, inches are approximate. We reserve the right to alter specifications without notice.

Salice Pull-Out

→ Double Bin Unit 18"

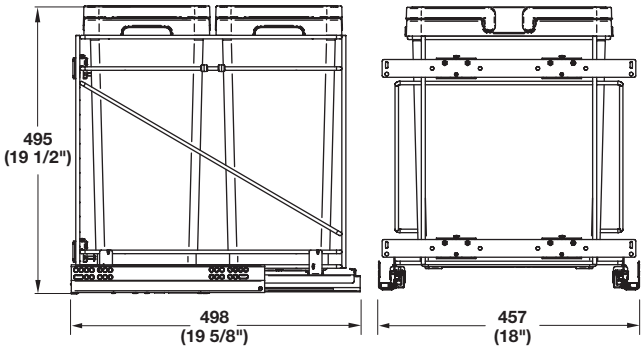

> For 451 mm (18") opening
> W x D x H: 457 x 498 x 495 mm (18" x 19 5/8" x 19 1/2")
> Capacity: 2 x 32 quarts (64 quarts)
> Material: Steel; Bin: Plastic

Frame	Bin	Salice No.	Item No.
chrome	silver	QPAM18228C	503.00.522

Supplied With
Mounting screws
Mounting instructions

→ Double Bin Unit 21"

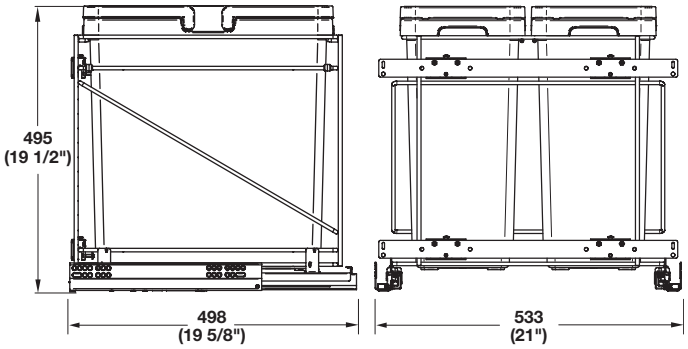

> For 533 mm (21") opening
> W x D x H: 533 x 498 x 495 mm (21" x 19 5/8" x 19 1/2")
> Capacity: 2 x 35 quarts (70 quarts)
> Material: Steel; Bin: Plastic

Frame	Bin	Salice No.	Item No.
chrome	silver	QPAM21235C	503.00.523

Supplied With
Mounting screws
Mounting instructions

→ Replacement Bins

> Material: Plastic; Color: silver

Capacity	Item No.
32 quarts	503.00.590
35 quarts	503.00.591

Dimensional data not binding. Dimensions in mm, inches are approximate. We reserve the right to alter specifications without notice.

KV Pull-Out Bottom Mount

> Heavy-duty, under mount slide with soft close technology
> Installs in minutes using self-aligning brackets secured with only four screws
> Color coordinated aluminum side rails provide stability while concealing slide hardware
> Unique, washable, solid backsplash and floor:
  – Prevents debris from falling through to floor/cabinet
  – Easy to clean
  – Conceals hardware
> Decorative rail accents can be customized to match countertops or cabinetry
> Door brackets are reversible to adapt from standard width opening up to door sizes 76 mm (3") wider
> For replacement bins, lids and handles, see page **3.35**
> Weight capacity: 45 kg (100 lbs.)

Note
If using lid, add 19 mm (3/4") to height.

soft&silent

→ Single Bin Units

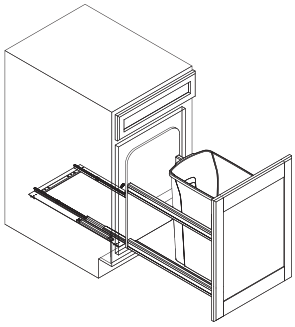

> W × D: 299 × 570 mm (11 13/16" × 22 7/16")
> Material: Steel; Bin: Plastic

Finish	Height	Capacity	KV No.	Item No.
frosted nickel	487 (19 3/16")	35 qts.	USC12-1-35PT	503.11.503
white	487 (19 3/16")	35 qts.	USC12-1-35WH	503.11.703
frosted nickel	591 (23 1/4")	50 qts.	USC12-1-50PT	503.11.513
white	591 (23 1/4")	50 qts.	USC12-1-50WH	503.11.713

→ Double Bin Units

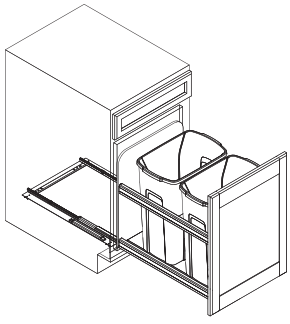

> W × D × H: 376 × 570 × 487 mm (14 13/16" × 22 7/16" × 19 3/16")
> Capacity: 2 × 35 quarts (70 quarts)
> Material: Aluminum; Bins: Plastic

Finish	KV No.	Item No.
frosted nickel	USC15-2-35PT	503.11.527
white	USC15-2-35WH	503.11.727

> W × D × H: 390 × 570 × 590 mm (15 3/8" × 22 7/16" × 23 1/4")
> Capacity: 2 × 50 quarts (100 quarts)
> Material: Aluminum; Bins: Plastic

Finish	KV No.	Item No.
frosted nickel	USC18-2-50PT	503.13.533
white	USC18-2-50WH	503.13.733

Dimensional data not binding. Dimensions in mm, inches are approximate. We reserve the right to alter specifications without notice.

KV Pull-Out Bottom Mount

> Heavy-duty ball bearing precision slides with overtravel
> Specialized wire management system holds bins securely in place
> Pre-assembled units install easily with only four screws
> Easy-open handle is standard on all units and integrated on triple bin units; its wide, open architecture makes it easy to grasp
> Optional door mount bracket with new features, see page **3.35**
> For replacement bins, lids and handles, see page **3.35**
> Weight capacity: 36 kg (80 lbs.)
> Material: Steel; Bins: Plastic; Color: white

Note
If using lid, add 19 mm (3/4") to height.

→ Single Bin Units

W × H × D	Capacity	KV No.	Item No.
212 × 440 × 511 (8 3/8" × 17 5/16" × 20 1/8")	20 quarts	SBM9-1-20WH	503.12.760
244 × 478 × 511 (9 5/8" × 18 13/16" × 20 1/8")	35 quarts	SBM10-1-35WH	503.12.762
289 × 581 × 511 (11 3/8" × 22 7/8" × 20 1/8")	50 quarts	SBM12-1-50WH	503.12.764
365 x 478 x 406 (14 3/8" × 18 3/4" × 16")	35 quarts	SBM15-1-35WH	503.12.777

→ Double Bin Units

W × H × D	Capacity	KV No.	Item No.
289 × 476 × 559 (11 3/8" × 18 3/4" × 22")	2 × 27 (54 quarts)	SBM12-2-27WH	503.12.784
365 × 440 × 511 (14 3/8" × 17 5/16" × 20 1/8")	2 × 20 (40 quarts)	SBM15-2-20WH	503.12.787
365 × 478 × 559 (14 3/8" × 18 13/16" × 22")	2 × 35 (70 quarts)	SBM15-2-35WH	503.12.797

Dimensional data not binding. Dimensions in mm, inches are approximate. We reserve the right to alter specifications without notice.

KV Pull-Out Bottom Mount

> Heavy-duty, full extension, overtravel ball bearing slides with and 25 mm (1") overtravel
> Eco-friendly frosted nickel finish or white
> Easy installation with only four screws
> Easy to install handle is included
> Optional door mount bracket with new features, see page **3.35**
> For replacement bins and lids, see page **3.35**
> Weight capacity: 45 kg (100 lbs.)
> Material: Steel; Bins: Plastic

Note
If using lid, add 19 mm (3/4") to height.

soft&silent

→ Single Bin Units

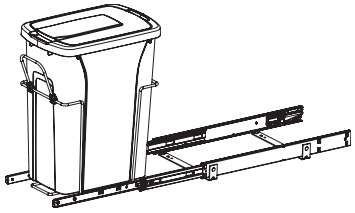

Finish	W × H × D	Capacity	KV No.	Item No.
frosted nickel	213 × 440 x 511 (8 3/8" × 17 5/16" x 20 1/8")	20 quarts	SCB9-1-20PT	503.13.540
white			SCB9-1-20WH	503.13.740
frosted nickel	244 × 478 x 511 (9 5/8" × 18 13/16" x 20 1/8")	35 quarts	SCB10-1-35PT	503.13.541
white			SCB10-1-35WH	503.13.741
frosted nickel	289 × 581x 511 (11 3/8" × 22 7/8" x 20 1/8")	50 quarts	SCB12-1-50PT	503.13.544
white			SCB12-1-50WH	503.13.744
frosted nickel	365 × 440 × 406 (14 3/8" × 17 5/16" × 16")	20 quarts	SCB15-1-20PT	503.13.547
white			SCB15-1-20WH	503.13.747

→ Double Bin Units

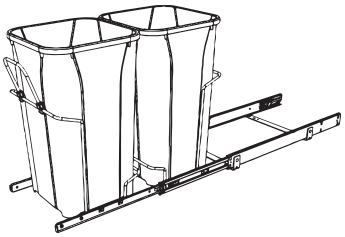

Finish	W × H × D	Capacity	KV No.	Item No.
frosted nickel	289 × 476 × 570 (11 3/8" × 18 3/4" × 22 7/16")	2 × 27 (54 quarts)	SCB12-2-27PT	503.13.554
white			SCB12-2-27WH	503.13.754
frosted nickel	365 × 440 × 511 (14 3/8" × 17 5/16" × 20 1/8")	2 × 20 (40 quarts)	SCB15-2-20PT	503.13.557
white			SCB15-2-20WH	503.13.757
frosted nickel	365 × 478 × 559 (14 3/8" × 18 13/16" × 22")	2 × 35 (70 quarts)	SCB15-2-35PT	503.13.558
white			SCB15-2-35WH	503.13.758

Dimensional data not binding. Dimensions in mm, inches are approximate. We reserve the right to alter specifications without notice.

KV Accessories

→ Replacement Bins

> For 503.12 and 503.13 series
> Material: Plastic

Color	Capacity	Item No.
frosted nickel	20 quarts	503.13.990
white	20 quarts	503.13.991
white	27 quarts	503.13.992
frosted nickel	35 quarts	503.13.993
white	35 quarts	503.13.994
frosted nickel	50 quarts	503.13.995
white	50 quarts	503.13.996

→ Lids, optional

> For 503.12 and 503.13 series
> Material: Plastic

Color	Capacity	Item No.
frosted nickel	20 quarts	503.13.890
white	20 quarts	503.13.891
frosted nickel	35 quarts	503.13.892
white	35 quarts	503.13.893

→ Door Mount Bracket Kits, optional

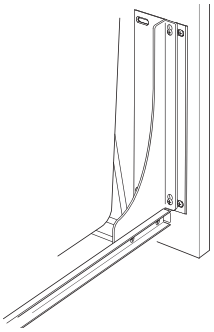

> For 503.12 and 503.13 series
> Installs quickly into slides with four screws
> Six-way adjustability for cabinet door alignment with easy “drop-in” keyhole attachment
> Adapts from standard width opening up to door sizes 70 mm (3") wider
> Eco-friendly frosted nickel finish or white
> Allows for application with most common cabinet door overlays
> Eliminates need for sub-panel support behind cabinet door
> Material: Steel

Finish	Item No.
frosted nickel	503.11.990

Dimensional data not binding. Dimensions in mm, inches are approximate. We reserve the right to alter specifications without notice.

Bottom Mount Wire Waste System

> For use behind a hinged door
> Easy to install with 4 screws in the floor of the cabinet
> Front bracket slides up against the back side of the face frame for easy mounting
> Soft close ball bearing slides
> Weight capacity: 40 kg (88 lbs.)
> W x D x H: 282 x 354 x 482 mm (11 1/8" x 13 15/16" x 19")
> Capacity: 36 quarts
> Material: Holder: Steel; Bin: Plastic

→ Frame with Single Waste Bin

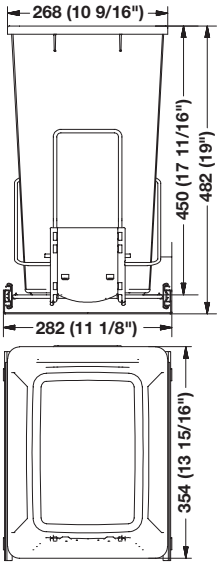

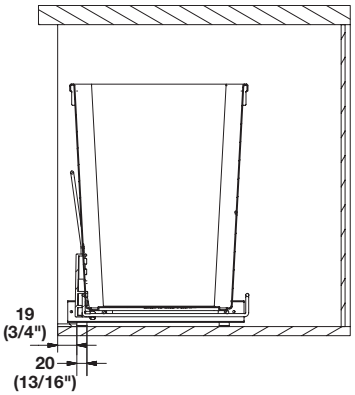

Frame	Bin	Item No.
chrome	gray	503.88.970

Supplied With
Frame
Bin
Mounting Screws

Dimensional data not binding. Dimensions in mm, inches are approximate. We reserve the right to alter specifications without notice.

Bottom Mount Wire Waste System

→ Frame with Double Waste Bins

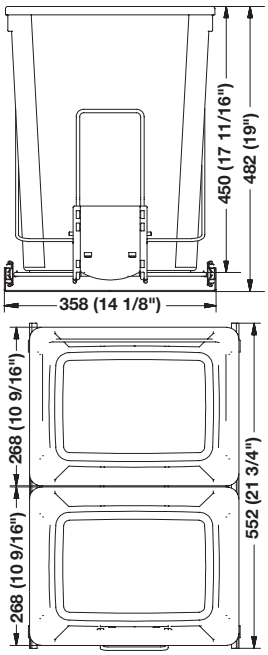

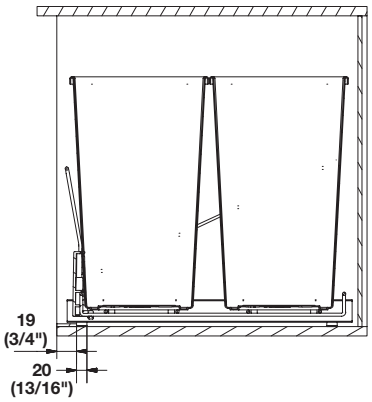

> W x D x H: 358 x 552 x 482 mm (14 1/8" x 21 3/4" x 19")
> Capacity: 2 x 36 quarts (72 quarts)
> Material: Holder: Steel; Bin: Plastic

Frame	Bin	Item No.
chrome	gray	503.88.971

Supplied With
Frame
Bin
Mounting Screws

→ Replacement Bin

> Capacity: 36 quarts
> Material: Plastic

Color	Item No.
gray	503.88.521

Dimensional data not binding. Dimensions in mm, inches are approximate. We reserve the right to alter specifications without notice.

Bottom Mount Wire Waste System

→ Frame with Double Waste Bins

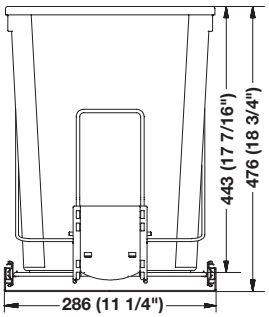

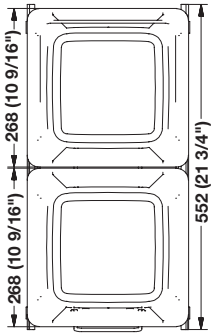

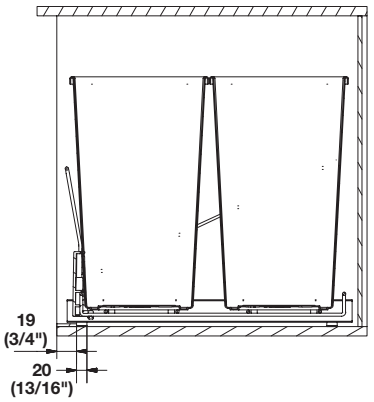

> For use behind a hinged door
> Easy to install with 4 screws in the floor of the cabinet
> Front bracket slides up against the back side of the face frame for easy mounting
> Soft close ball bearing slides
> Weight capacity: 40 kg (88 lbs.)
> W x D x H: 286 x 552 x 476 mm (11 1/4" x 21 3/4" x 18 3/4")
> Capacity: 2 x 27 quarts (54 quarts)
> Material: Frame: Steel; Bins: Plastic

Frame	Bin	Item No.
chrome	white	503.88.972

Supplied With
Frame
Bins
Mounting Screws

→ Replacement Bin

> Capacity: 25.5 quarts
> Material: Plastic

Color	Item No.
gray	503.88.525

→ Door Mount Bracket Kit, optional

> For 503.88.99X series
> Easy installation
> 4-way door adjustment
> W x D x H: 22 x 305 x 70 mm (7/8" x 12" x 2 3/4")
> Material: Steel, zinc-plated

Finish	Item No.
white	503.88.998

Supplied With
Mounting Screws

Dimensional data not binding. Dimensions in mm, inches are approximate. We reserve the right to alter specifications without notice.

Hailo Easy Cargo

→ Easy Cargo 30

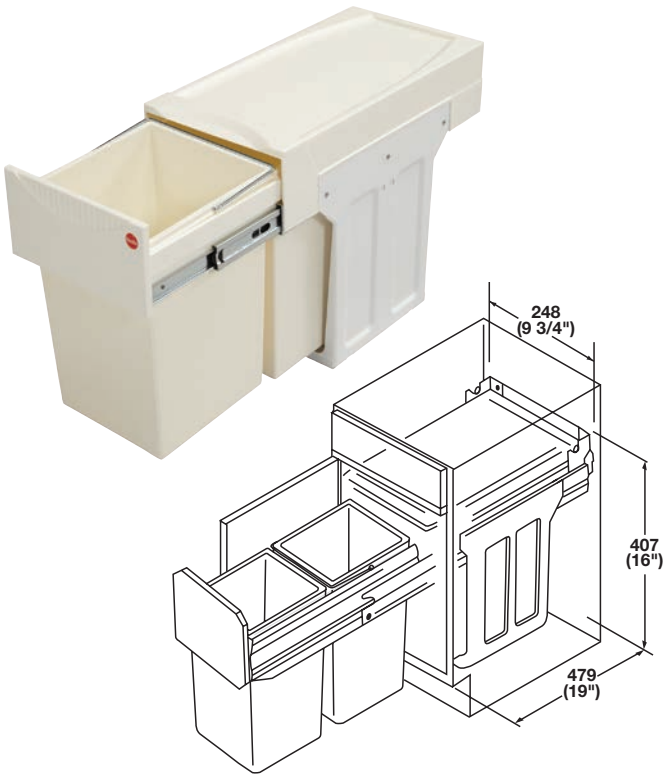

> Mounts to the cabinet floor
> Manual full extension ball bearing slides
> Frame clearance: 251 mm (9 7/8")
> Capacity: 2 × 16 quarts (32 quarts)
> Material: Frame: Steel, powder-coated; Cover & Bins: Plastic

Finish	Item No.
dark gray	502.70.252
white	502.71.755

→ Easy Cargo 20

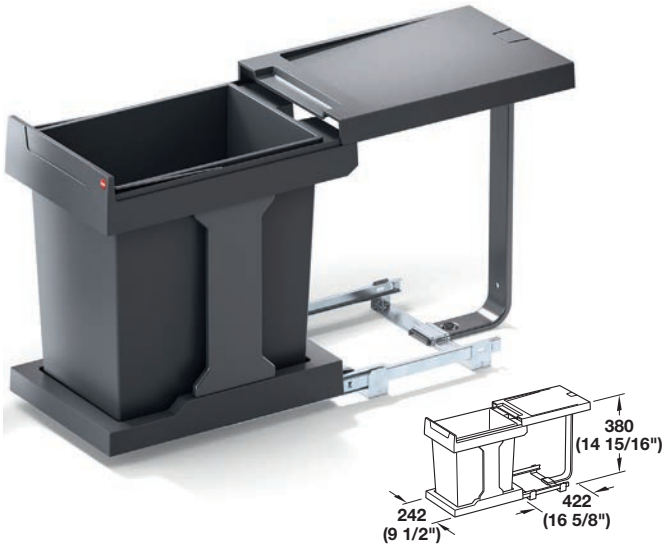

> For cabinet width: min. 300 mm (11 13/16")
> Mounts to the cabinet floor
> Features integrated lid; as the bin is pulled out the lid tilts automatically
> Manual full extension ball bearing slides
> Frame clearance: 245 mm (9 5/8")
> Capacity: 21 quarts
> Material: Frame: Steel, powder-coated; Cover & Bins: Plastic

Finish	Item No.
slate gray	502.43.300

→ Replacement Bin

> Capacity: 16 quarts
> Material: Plastic

Color	Item No.
gray	502.51.915

Dimensional data not binding. Dimensions in mm, inches are approximate. We reserve the right to alter specifications without notice.

Hailo Easy Cargo

> Mounts to the cabinet floor with 4 screws
> Lid snaps on
> Practical storage area on top of lid
> Use with a hinged door
> 100,000 cycle tested
> Weight capacity: 40 kg (88 lbs.)
> Material: Frame: Metal: Bins: Plastic; Color gray

→ Easy Cargo 40

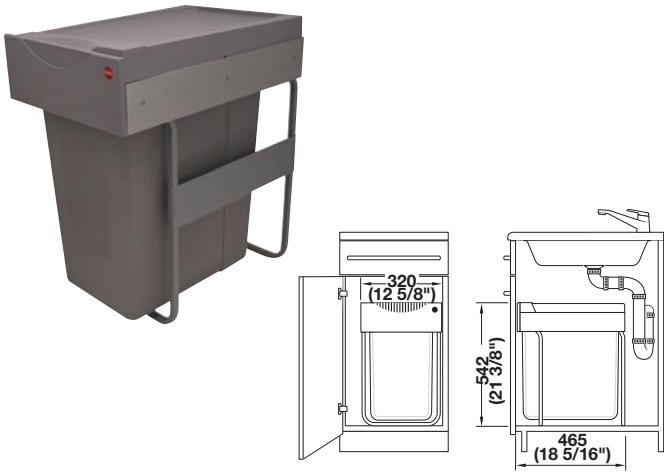

> With full extension ball bearing telescoping slides
> Compatible with 457 mm (18") face frame or 381 mm (15") frameless cabinets
> Capacity: 44.4 quarts

	Item No.
	502.43.520

Supplied With
Mounting screws

→ Easy Cargo 50

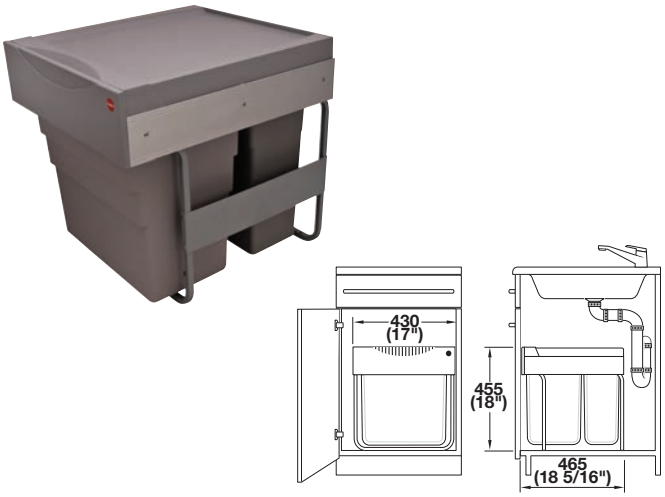

> With full extension ball bearing telescoping slides
> Compatible with 533 mm (21") face frame cabinets
> Capacity: 1 x 32 quarts; 1 x 20 quarts

	Item No.
	502.70.522

Supplied With
Mounting screws

→ Replacement Bin

> Capacity: 44.4 quarts

	Item No.
	502.74.900

Dimensional data not binding. Dimensions in mm, inches are approximate. We reserve the right to alter specifications without notice.

Hailo

→ Bottom Mount

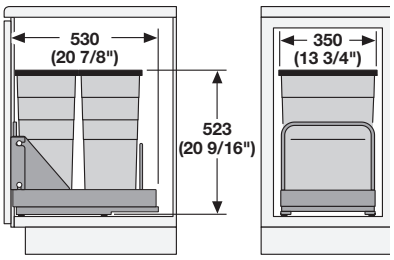

> Door mounted
> For cabinets from 400 mm (15 3/4") wide and minimum 800 mm (31 1/2") double door cabinets
> Progressive travel slides with soft close
> W x D x H: 350 x 530 x 523 mm (13 3/4" x 20 7/8" x 20 9/16")
> Capacity: 2 x 30.6 qts. (61.2 qts.)
> Weight capacity: 50 kg (110 lbs.)
> Material: Steel; Bins: Plastic; Color: gray

Finish	Item No.
silver	502.25.500

Supplied With
Mounting screws

→ Tandem Space-saver

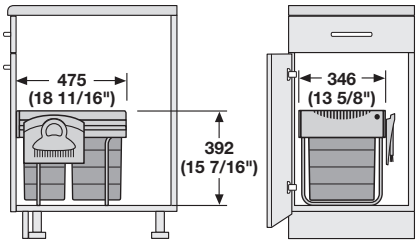

> For hinged cabinet doors from 400 mm (15 3/4") wide
> Bottom mounted
> Full extension slides
> W x D x H: 346 x 475 x 392 mm (13 5/8" x 18 11/16" x 15 7/16")
> Capacity: 2 x 21.1 qts. (42.2 qts.)
> Material: Steel; Bins: Plastic; Color: gray

Description	Item No.
Tandem waste bin	502.43.547
Replacement dust pan and brush	502.27.940

Supplied With
Dust pan
Brush

Dimensional data not binding. Dimensions in mm, inches are approximate. We reserve the right to alter specifications without notice.

Wood Frame Side Mount

> Side panel mounted
> Accuride full extension ball bearing slides
> Door mounting bracket provides 6-way adjustment
> Weight capacity: 45 kg (100 lbs.)
> For replacement bins, see below
> Material: Frame: Maple; Bins: Plastic; Color: white

soft&silent

→ Single Waste Bin

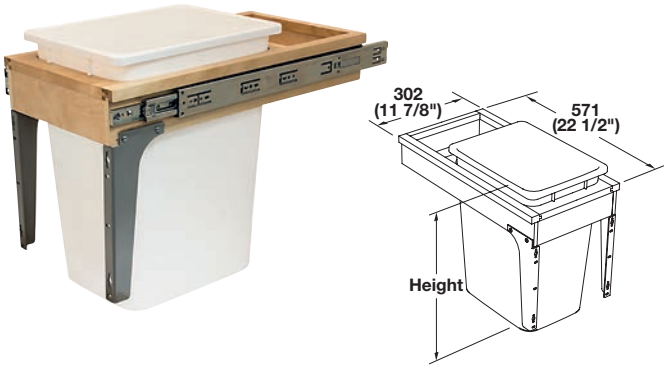

> Fits 305 mm (12") opening
> With storage compartment

Capacity	Height	Item No.
36 qts.	457 (18")	503.08.131
52 qts.	559 (22")	503.08.132

Supplied With
1 Bin

→ Double Waste Bins

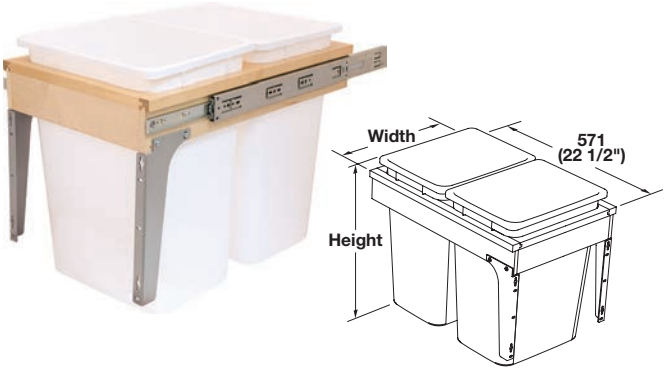

> Fits 381 mm (15") and 457 mm (18") openings

Capacity	Height	Width	Item No.
2 x 36 qts. (72 qts.)	457 (18")	378 (14 7/8")	503.08.142
		455 (17 7/8")	503.08.144
2 x 52 qts. (104 qts.)	559 (22")	378 (14 7/8")	503.08.143
		455 (17 7/8")	503.08.145

Supplied With
2 Bins

→ Replacement Bin

Capacity	W x D x H	Item No.
36 qts.	368 x 279 x 457 (14 1/2" x 11" x 18")	503.88.721
52 qts.	368 x 279 x 559 (14 1/2" x 11" x 22")	503.88.724

Dimensional data not binding. Dimensions in mm, inches are approximate. We reserve the right to alter specifications without notice.

KV Wood Frame Side Mount

> Side panel mounted
> Heavy-duty, full-extension, overtravel ball bearing slides
> Door-mount brackets include six-way adjustability for precise door alignment and easy installation
> Unique KV face frame adapter mounting hardware accommodates 44.4 mm (1 3/4") face frame cabinets by allowing for installation in openings 12.7 mm (1/2") smaller than standard sizes (excluding 503.11.756 and 503.11.556)
> Made of multi-ply birch veneered plywood with soft radius edges for safety and comfort
> Bins have optional lids, see page **3.35**
> Weight capacity: 36 kg (80 lbs.)
> Material: Birch Veneered Plywood/Steel; Bin: Plastic

Note
If using lid, add 19 mm (3/4") to height.

soft&silent

→ Single Bin Units

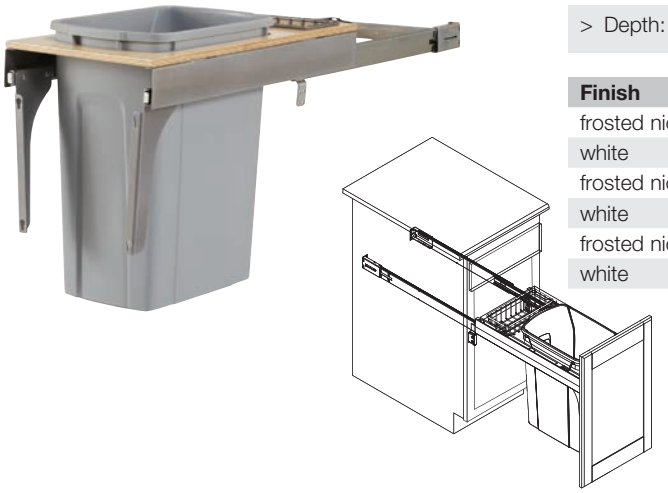

> Depth: 589 mm (23 3/16")

Finish	W × H	Capacity	KV No.	Item No.
frosted nickel	292 × 445 (11 1/2" × 17 1/2")	35 quarts	TSC12-1-35PT	503.11.532
white			TSC12-1-35WH	503.11.732
frosted nickel	368 × 445 (14 1/2" × 17 1/2")		TSC15-1-35PT	503.11.535
white			TSC15-1-35WH	503.11.735
frosted nickel	368 × 549 (14 1/2" × 21 5/8")	50 quarts	TSC15-1-50PT	503.11.545
white			TSC15-1-50WH	503.11.745

→ Double Bin Units

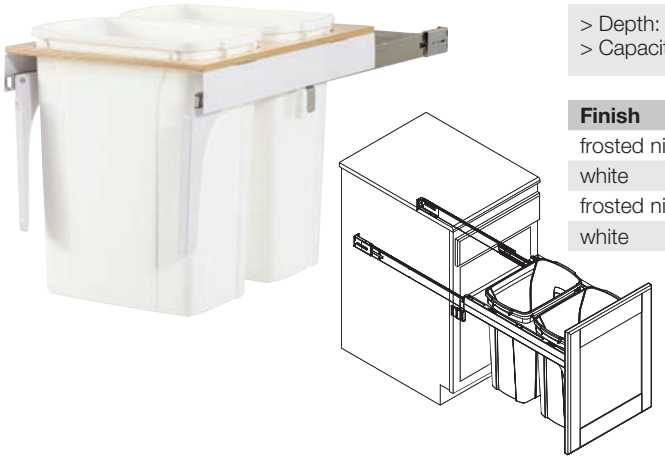

> Depth: 589 mm (23 3/16")
> Capacity: 2 × 35 quarts (70 quarts)

Finish	W × H	KV No.	Item No.
frosted nickel	381 × 445 (15" × 17 1/2")	TSC15-2-35PT	503.11.556
white		TSC15-2-35WH	503.11.756
frosted nickel	445 × 445 (17 1/2" × 17 1/2")	TSC18-2-35PT	503.11.558
white		TSC18-2-35WH	503.11.758

Dimensional data not binding. Dimensions in mm, inches are approximate. We reserve the right to alter specifications without notice.

KV Wood Frame Side Mount

> Door mount brackets include six-way adjustability for precise door alignment and easy installation
> Made of multi-ply birch veneered plywood with soft radius edges for safety and comfort
> Weight capacity: 36 kg (80 lbs.)
> Material: Birch Veneered Plywood/Steel; Finish: anochrome
Bin: Plastic; Color: white

Note
If using lid, add 19 mm (3/4") to height.

→ Single Bin Units

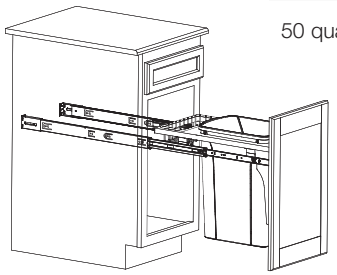

> Depth: 572 mm (22 1/2")

Capacity	W x H	KV No.	Item No.
35 quarts	292 × 445 (11 1/2" × 17 1/2")	PDMTM115-1-35WH	503.12.722
35 quarts	305 × 445 (12" × 17 1/2")	PDMTM12-1-35WH	503.12.733
50 quarts	368 × 549 (14 1/2" × 21 5/8")	PDMTM145-1-50WH	503.12.735

→ Double Bin Units

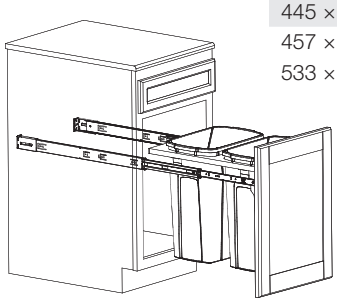

> Depth: 572 mm (22 1/2")
> Capacity: 35 × 2 (70 quarts)

W x H	KV No.	Item No.
381 × 445 (15" × 17 1/2")	PDMTM15-2-35WH	503.12.746
445 × 445 (17 1/2" × 17 1/2")	PDMTM175-2-35WH	503.12.748
457 × 445 (18" × 17 1/2")	PDMTM18-2-35WH	503.12.749
533 × 445 (21" × 17 1/2")	PDMTM21-2-35WH	503.12.750

Dimensional data not binding. Dimensions in mm, inches are approximate. We reserve the right to alter specifications without notice.

KV Wood Frame Bottom Mount

> Wood drawer box holds bins and provides a clean look
> Heavy-duty, under mount slide with soft close technology
> Installs in minutes with self-aligning and 6 screws
> Unique, washable, solid floor
> Prevents debris from falling through to floor/cabinet
> Easy to clean
> Conceals hardware
> Single bin units include a storage space for trash bags or cleaning products
> Bins have optional lids, see page **3.35**
> Material: Wood; Bins: Plastic; Color: white

Note
If using lid, add 19 mm (3/4") to height.
13.6 kg (30 lbs.) maximum per bin, not to exceed 36 kg (80 lbs.) total weight.
Not intended for bulk storage.

→ Single Bin Units

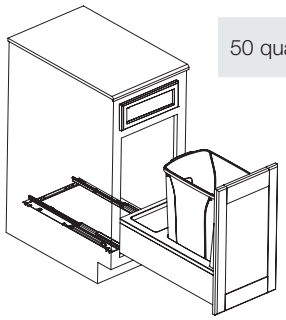

> Depth: 568 mm (22 3/8")

Capacity	W x H	KV No.	Item No.
35 quarts	286 x 489 (11 1/4" x 19 1/4")	WUSC12-1-35WH	503.14.772
50 quarts	286 x 592 (11 1/4" x 23 5/16")	WUSC12-1-50WH	503.14.773

→ Double Bin Units

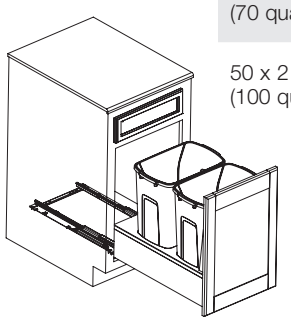

Capacity	W x H x D	KV No.	Item No.
27 x 2 (54 quarts)	295 x 498 x 568 (11 5/8" x 19 5/8" x 22 3/8")	WUSC12-2-27WH	503.14.782
35 x 2 (70 quarts)	371 x 489 x 568 (14 5/8" x 19 1/4" x 22 3/8")	WUSC15-2-35WH	503.14.784
50 x 2 (100 quarts)	429 x 592 x 570 (16 7/8" x 23 1/32" x 22 7/16")	WUSC18-2-50WH	503.14.785

Dimensional data not binding. Dimensions in mm, inches are approximate. We reserve the right to alter specifications without notice.

Wood Frame Bottom Mount

> Integrated Grass Elite 36 kg (80 lb.) capacity soft close slides
> Dovetailed construction
> Easy mounting to the cabinet floor with supplied screws
> Supplied with adjustable door mounting brackets
> For replacement bins and lids, see page **3.29**
> Material: Prefinished Baltic Birch Plywood Sides; Solid Birch Top Bin: Plastic; Color: gray

soft&silent

→ Single Waste Bin

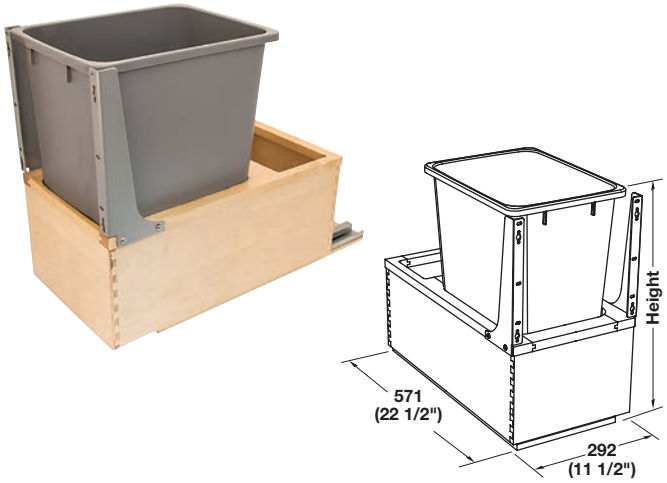

> W × D: 292 x 572 mm (11 1/2" x 22 1/2")

Capacity	Height	Item No.
36 qts.	495 (19 1/2")	503.88.852
52 qts.	610 (24")	503.88.853

Supplied With
Mounting screws for pull-out
1 Bin
Mounting instructions

→ Double Waste Bins

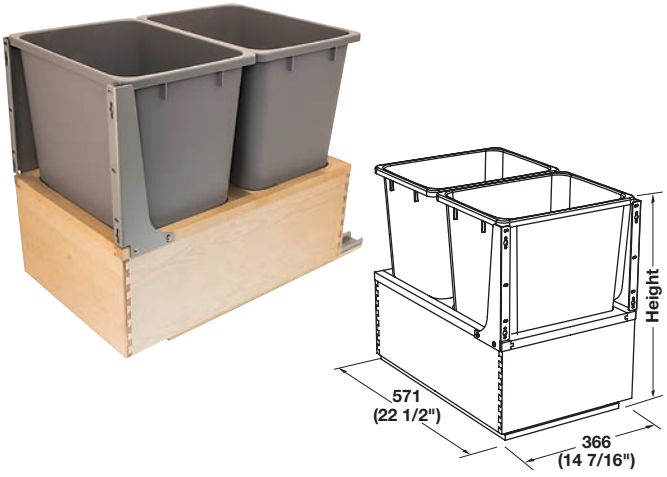

> W × D: 367 x 572 mm (14 7/16" x 22 1/2")

Capacity	Height	Item No.
2 x 36 qts. (72 qts.)	495 (19 1/2")	503.88.862
2 x 52 qts. (104 qts.)	610 (24")	503.88.863

Supplied With
Mounting screws for pull-out
2 Bins
Mounting instructions

Dimensional data not binding. Dimensions in mm, inches are approximate. We reserve the right to alter specifications without notice.

KV

→ Corner Recycling Bin

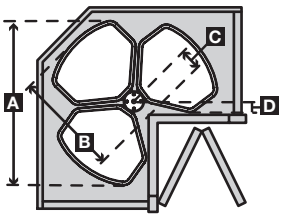

> Three removable bins rotate on 25 mm (1") diameter post
> Designed to fit in 914 mm (36") base corner cabinet
> A × B × C × D: 702 × 465 × 114 × 81 mm
(27 5/8" × 18 5/16" × 4 1/2" × 3 3/16")
> Capacity: 3 x 32 quarts (96 quarts)
> Material: Plastic

Color	KV No.	Item No.
white	RRC28K-W	503.14.700

→ Replacement Bin

> For recycling bin above
> Capacity: 32 quarts
> Material: Plastic

Color	KV No.	Item No.
white	QT32PB-W	503.13.998

→ Door Mounted Bin

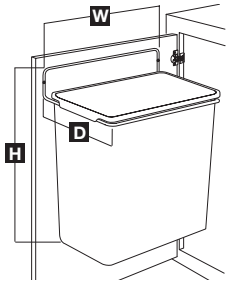

> Perfect for kitchens and baths
> Installs easily with only two screws; removable
> W × H × D: 241 × 340 × 178 mm (9 1/2" × 13 3/8" × 7")
> Capacity: 9 quarts
> Material: Plastic

Color	KV No.	Item No.
white	DWB975-W	503.14.760

Dimensional data not binding. Dimensions in mm, inches are approximate. We reserve the right to alter specifications without notice.

Door Mounted, Free Standing and Countertop Bins

→ Hailo Side Panel/Door Mounted

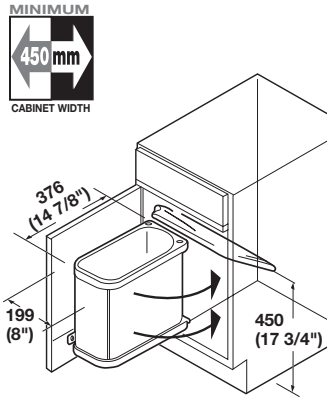

> For swing-out doors
> Minimum frame clearance: 389 mm (15 3/8")
> Left or right mounting
> Capacity: 19 quarts
> Material: Plastic

Color	Item No.
stainless steel	502.62.014
white/light gray	502.62.710
stainless steel/black	502.62.114

→ Side Panel/Door Mounted

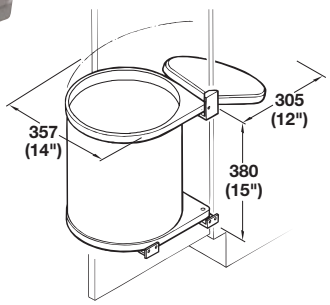

> Left or right mounting
> Lid tilts out automatically when the door is opened
> For cabinet width: > 400 mm (15 3/4")
> Capacity: 16 quarts
> Material: Plastic; Bins: Plastic: Color: light gray

Color	Item No.
white, plastic-coated, white lid	502.12.729
stainless steel, polished, white lid	502.12.023
stainless steel, polished, black lid	502.12.041

Supplied With
Mounting instructions
Hardware

→ Free Standing Bin

> W x D x H: 346 x 260 x 514 mm (13 5/8" x 10 1/4" x 20 1/4")
> Capacity: 44 qts.
> Material: Steel, powder-coated; Bin: Plastic

Color	Item No.
white	502.30.718

→ Countertop Waste Bin

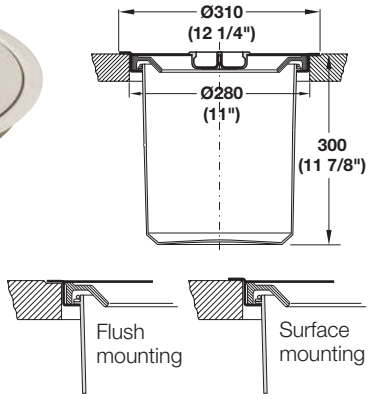

> For flush or surface mounting
> With stainless steel and soft rubber ring
> Capacity: 12 quarts
> Material: Lid: Stainless Steel; Bin: Plastic

Color	Item No.
black	502.94.000

Dimensional data not binding. Dimensions in mm, inches are approximate. We reserve the right to alter specifications without notice.

Waste Bin Accessories

→ Door Opener

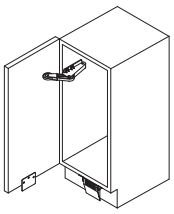

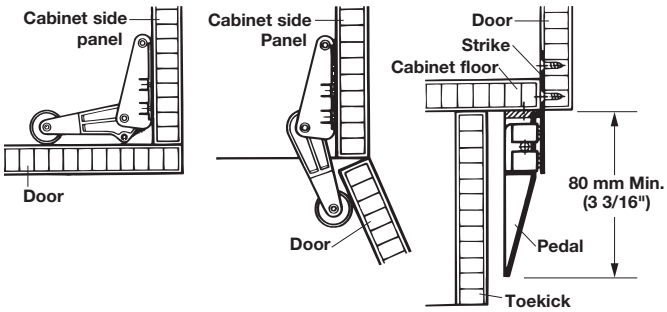

> For hinged base cabinet doors
> Material: Pedal and Roller Arm: Plastic; Strike: Steel

Color	Item No.
white	502.15.033

→ Foot Pedal

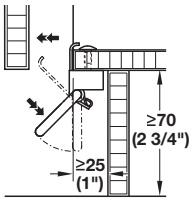

> For automatic extension of a waste bin
> Material: Stainless Steel

Finish	Item No.
satin	502.47.183

→ Foot pedal

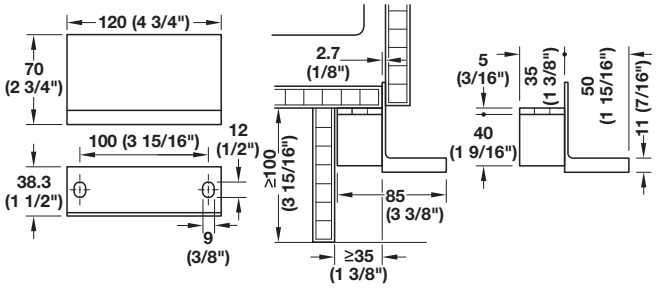

> For waste bins behind front panels
> Easily retrofitted
> Can also be used for the bottom drawer
> Toe kick height: min. 100 mm (3 15/16")
> Toe kick offset: min. 35 mm (1 3/8")
> Width: 120 mm (4 3/4")
Material: Stainless Steel

	Item No.
	502.47.186

Dimensional data not binding. Dimensions in mm, inches are approximate. We reserve the right to alter specifications without notice.

Häfele MX Laundry Hamper

> For vanity or laundry cabinets
> Progressive action runners with soft close
> Double wall steel frame system provides heavy duty structure and a stylish design
> Bottom mount unit designed for face frame or frameless cabinets
> Quick mounting, bottom bracket rests against the back of the face frame (19 mm (3/4") from front edge
> Add your door thickness for inset applications
> Weight capacity: 50 kg (110 lbs.)
> For 457 mm (18") wide base cabinets with no drawer above
> Minimum opening width: Face frame - 375 mm (14 3/4")
Frameless - 394 mm (15 1/2")
Door brackets are reversable for full overlay 5 piece doors - 413 mm (16 1/4")
> D x H: min. 500 x 563 mm (19 11/16" x 22 3/16")
> Material: Steel; Bottom and Back: Melamine (2-Sided); Bag: Nylon

soft&silent

→ Laundry Hamper 18”

Frame	Bottom and Back	Bag	Item No.
white	white	black	503.15.765
anthracite	black	black	503.15.365
champagne	maple	black	503.15.865

Supplied With
Mounting screws
Mounting instructions

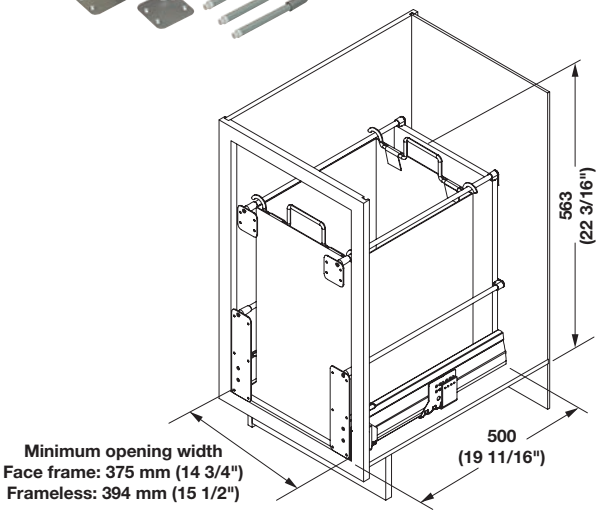

Dimensional data not binding. Dimensions in mm, inches are approximate. We reserve the right to alter specifications without notice.

Hailo Laundry Hamper

> Sidewall mounted with over extension soft close slides
> Supplied with a lid that can be used for storage or to contain odors
> Weight capacity: 100 lbs.
> Material: Steel; Hampers: Plastic; Lid: Steel
Finish: Frame/Hamper: white/white/light blue

soft&silent

→ Laundry Hamper 45

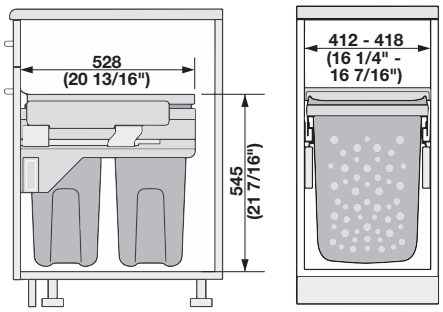

> For 450 mm (17 11/16") wide base cabinets
> Capacity: 2 x 35 qts. (70 qts.)
> W x H x D: 412-418 x 545 x 528 mm
(16 1/4"-16 7/16" x 21 7/16" x 20 13/16")

	Item No.
	502.72.722

Supplied With
2 Hampers, Built-in Lid

→ Laundry Hamper 45 - Short

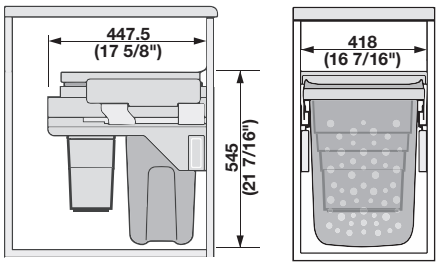

> For 450 mm (17 11/16") wide base cabinets
> Capacity: Hamper - 35 qts., Bin - 12 qts.
> W x H x D: 418 x 545 x 447.5 mm
(16 7/16" x 21 7/16" x 17 5/8")

	Item No.
	502.72.701

Supplied With
Hamper, Bin, Built-in Lid

→ Laundry Hamper 60

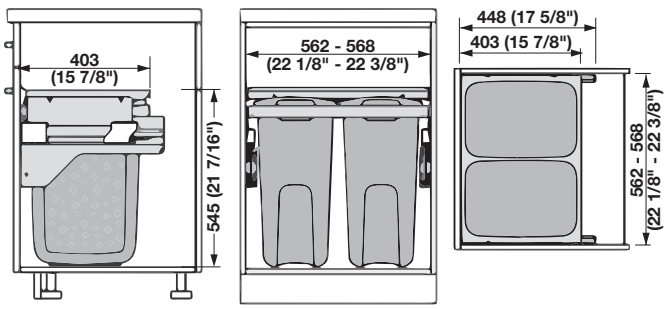

> For 600 mm (23 5/8") wide base cabinets
> Capacity: 2 x 35 qts. (70 qts.)
> W x H x D: 562-568 x 545 x 448 mm
(22 1/8"-22 3/8" x 21 7/16" x 17 5/8")

	Item No.
	502.72.705

Supplied With
2 Hampers, Built-in Lid

→ Replacement Hampers

> Capacity: 35 qts.
> Material: Plastic

Color	Item No.
white	502.72.990
blue	502.72.993

Dimensional data not binding. Dimensions in mm, inches are approximate. We reserve the right to alter specifications without notice.

This page is left blank intentionally.

Dimensional data not binding. Dimensions in mm, inches are approximate. We reserve the right to alter specifications without notice.

Dispensa

> Easy installation
> For 305 x 610 mm (12" to 24") cabinet widths
> Door mounted; for overlay and inset doors
> Height adjustable trays in 102 mm (4") increments
> Integrated soft open and soft close
> Synchronized runner provides a more stable and smooth operation
> Weight capacity: 120 kg (265 lbs.)
> Material: Steel

soft&silent

→ Full Extension Pantry Frame

> W x D: 121 x 546 mm (4 3/4" x 21 1/2")

Installed height	Rec. # of trays	champagne	silver
800 – 1200 (31 1/2" – 47 1/4")	4	546.62.810	546.62.910
1200 – 1600 (47 1/4" – 63")	4	546.62.811	546.62.911
1600 – 2000 (63" – 78 3/4")	6	546.62.812	546.62.912
1900 – 2300 (74 7/8" – 90 1/2")	8	546.62.813	546.62.913

Supplied With
Frame
Runners
Door brackets
Integrated soft open and close

→ Basket Holder, optional

> To be used as add-on hooks when pantry frame height is extended
> Height: 125 mm (5")

Finish	Item No.
champagne	545.84.480
silver	545.84.280

Supplied With
2 pcs.

Flat head screws	pages 12.7-12.8, 12.10, 12.13
Pan head screws	pages 12.9-12.10

→ Front Stabilizer, optional

> Can be secured anywhere to the support frame
> Additional door support for tall doors
> W × D × H: 160 × 28 × 20 mm (6 5/16" × 1 1/8" × 13/16")

Finish	Item No.
champagne	546.76.420
silver	546.76.220

Dimensional data not binding. Dimensions in mm, inches are approximate. We reserve the right to alter specifications without notice.

Dispensa Trays

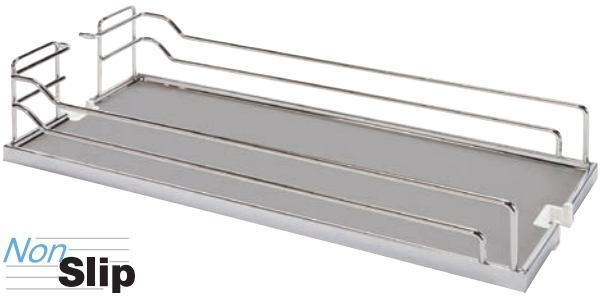

Non Slip

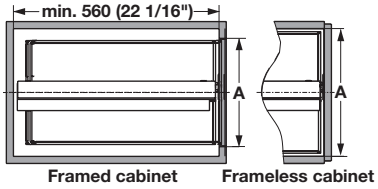

> D × H: 518 × 105 mm (20 3/8" × 4 1/8")
> Material: Melamine; Surround: Steel, powder-coated or chrome

Tray width	A minimum	maple/champagne	maple/chrome	white/chrome	gray/chrome	anthracite/chrome
203 (8")	216 (8 1/2")	546.63.812	546.63.112	546.63.212	–	546.63.580
254 (10")	267 (10 1/2")	546.63.832	546.63.132	546.63.232	546.63.532	546.63.581
279 (11")	292 (11 1/2")	546.63.813	546.63.113	546.63.213	–	546.63.582
330 (13")	343 (13 1/2")	546.63.833	546.63.133	546.63.233	546.63.533	546.63.583
356 (14")	368 (14 1/2")	546.63.814	546.63.114	546.63.214	–	546.63.584
406 (16")	419 (16 1/2")	546.63.834	546.63.134	546.63.234	546.63.534	546.63.585
432 (17")	445 (17 1/2")	546.63.815	546.63.115	546.63.215	–	546.63.587
483 (19")	495 (19 1/2")	546.63.835	546.63.135	546.63.235	–	546.63.588
508 (20")	521 (20 1/2")	546.63.816	546.63.116	546.63.216	–	546.63.586
559 (22")	572 (22 1/2")	546.63.836	546.63.136	546.63.236	–	546.63.589

Supplied With
2 Trays

→ Wire Basket Set

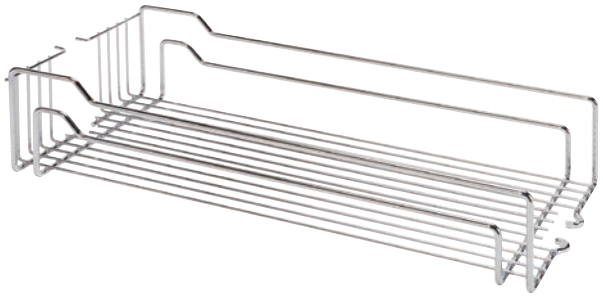

> D × H: 518 × 105 mm (20 3/8" × 4 1/8")
> Material: Steel; Finish: chrome

Basket width	A minimum	Item No.
203 (8")	216 (8 1/2")	546.63.202
254 (10")	267 (10 1/2")	546.63.222
279 (11")	292 (11 1/2")	546.63.203
330 (13")	343 (13 1/2")	546.63.223
356 (14")	368 (14 1/2")	546.63.204
406 (16")	419 (16 1/2")	546.63.224
432 (17")	445 (17 1/2")	546.63.205
483 (19")	495 (19 1/2")	546.63.225
508 (20")	521 (20 1/2")	546.63.206
559 (22")	572 (22 1/2")	546.63.226

Supplied With
2 Baskets

Dimensional data not binding. Dimensions in mm, inches are approximate. We reserve the right to alter specifications without notice.

Dispensa Fineline™ Boxes

> A beautiful combination of the warmth of wood with European functional hardware
> Combine with other Fineline interior cabinet accessories for a consistent design throughout your entire kitchen

Note
Design Patent #D894.653

soft&silent

→ Boxes

> D x H: 475 x 71 mm (18 3/4" x 2 13/16")

Width	A minimum	Birch	Walnut
203 (8")	216 (8 1/2")	545.96.883	545.96.783
254 (10")	267 (10 1/2")	545.96.884	545.96.784
279 (11")	292 (11 1/2")	545.96.885	545.96.785
330 (13")	343 (13 1/2")	545.96.886	545.96.786
356 (14")	368 (14 1/2")	545.96.887	545.96.787
406 (16")	419 (16 1/2")	545.96.888	545.96.788
432 (17")	445 (17 1/2")	545.96.889	545.96.789
483 (19")	495 (19 1/2")	545.96.890	545.96.790
508 (20")	521 (20 1/2")	545.96.891	545.96.791
559 (22")	572 (22 1/2")	545.96.892	545.96.792

→ Bracket Set

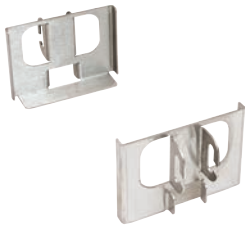

For box width	Steel/silver	Steel/ champagne	304 Stainless Steel/brushed
203 (8")	545.96.903	545.96.803	545.96.003
254 (10")	545.96.904	545.96.804	545.96.004
279 (11")	545.96.905	545.96.805	545.96.005
330 (13")	545.96.906	545.96.806	545.96.006
356 (14")	545.96.907	545.96.807	545.96.007
406 (16")	545.96.908	545.96.808	545.96.008
432 (17")	545.96.909	545.96.809	545.96.009
483 (19")	545.96.910	545.96.810	545.96.010
508 (20")	545.96.911	545.96.811	545.96.011
559 (22")	545.96.912	545.96.812	545.96.012

Dimensional data not binding. Dimensions in mm, inches are approximate. We reserve the right to alter specifications without notice.

Tandem Chef's Pantry

> Right or left door mounted
> Back frame is unhanded
> Door weight is supported by special frame brackets
> Order 2 frame sets and 2 sets of trays for a double door application
> Weight capacity: Back: 59 kg (130 lbs.) Door: 25 kg (55 lbs.)
> Material: Steel, powder-coated

soft&silent

→ Frame

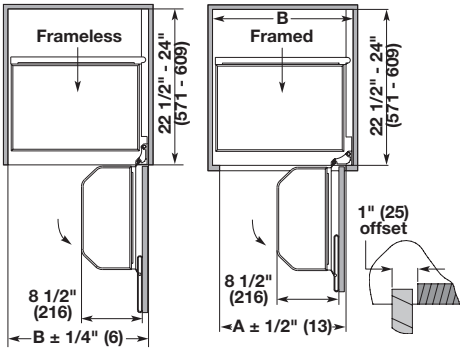

A: Frame clearance
B: Interior clearance

			Height: 1727 mm (68")	Height: 1168 mm (46")	
A	**B**	**Width**	**champagne**	**champagne**	**silver**
381 (15")	419 (16 1/2")	381 (15")	546.64.821	546.64.811	546.64.911
457 (18")	495 (19 1/2")	457 (18")	546.64.822	546.64.812	546.64.912
533 (21")	572 (22 1/2")	533 (21")	546.64.823	546.64.813	546.64.913

Supplied With
Mounting hardware

Dimensional data not binding. Dimensions in mm, inches are approximate. We reserve the right to alter specifications without notice.

Tandem Chef's Pantry Trays

→ Arena Plus Tray Set for Back Frame

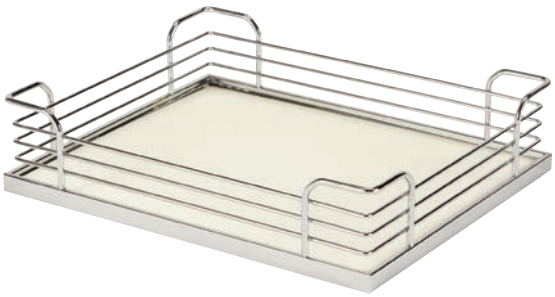

> D x H: 305 × 88 mm (12" × 3 1/2")
> Material: Melamine; Surround: Steel

Frame clearance	Interior clearance	Width	maple/champagne	maple/chrome	white/chrome	anthracite/chrome
381 (15")	419 (16 1/2")	378 (14 7/8")	546.65.801	546.65.101	546.65.201	546.65.301
457 (18")	495 (19 1/2")	454 (17 7/8")	546.65.802	546.65.102	546.65.202	546.65.302
533 (21")	572 (22 1/2")	530 (20 7/8")	546.65.803	546.65.103	546.65.203	546.65.303

Supplied With
2 Trays

Note
Order 3 tray sets for 68" version.

→ Arena Plus Tray Set for Door

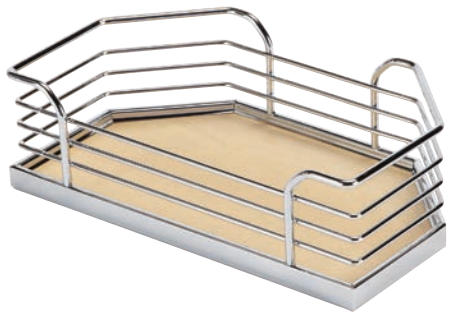

> D x H: 171 × 88 mm (6 3/4" × 3 1/2")
> Material: Melamine; Surround: Steel

Interior clearance	Width	maple/champagne	maple/chrome	white/chrome	anthracite/chrome
419 (16 1/2")	283 (11 1/8")	546.65.811	546.65.111	546.65.211	546.65.311
495 (19 1/2")	359 (14 1/8")	546.65.812	546.65.112	546.65.212	546.65.312
572 (22 1/2")	435 (17 1/8")	546.65.813	546.65.113	546.65.213	546.65.313

Supplied With
2 Trays

Note
Order 3 tray sets for 68" version.

Dimensional data not binding. Dimensions in mm, inches are approximate. We reserve the right to alter specifications without notice.

Tandem Solo Pantry

> Easy fit for tall frameless cabinets
> Height adjustable shelves to be positioned above or below door hinges
> Smooth gliding roller with soft open and close
> For cabinet widths: 457–610 mm (18"–24")
> Weight capacity: 100 kg (220 lbs.)
> Material: Steel, powder-coated

Note
Soft close and standard angle hinges are recommended.

→ Frame

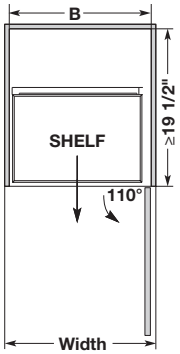

> Height: 1137 mm (44 3/4")
> Minimum internal cabinet height: 1295 mm (51")

Width	B	champagne	silver
457 (18")	419–425 (16 1/2–16 3/4")	546.92.801	546.92.901
533 (21")	470–476 (18 1/2–18 3/4")	546.92.802	546.92.902
610 (24")	572–578 (22 1/2–22 3/4")	546.92.803	546.92.903

> Height: 1635 mm (64 3/8")
> Minimum internal cabinet height: 1803 mm (71")

Width	B	champagne	silver
457 (18")	419–425 (16 1/2–16 3/4")	546.92.831	546.92.931
533 (21")	470–476 (18 1/2–18 3/4")	546.92.832	546.92.932
610 (24")	572–578 (22 1/2–22 3/4")	546.92.833	546.92.933

Note
Only to be used with frameless cabinets

Dimensional data not binding. Dimensions in mm, inches are approximate. We reserve the right to alter specifications without notice.

HÄFELE

Tandem Solo Pantry Trays

> D x H: 419 × 88 mm (16 1/2" × 3 1/2")
> Material: Shelf: Melamine; Surround: Steel

→ Arena Plus Style Tray Sets

Champagne/Maple

Chrome/Maple

Chrome/White

Frame	Width	champagne/maple	chrome/maple	chrome/white	chrome/anthracite
457 (18")	327 (12 7/8")	546.92.881	546.92.281	546.92.781	546.92.384
533 (21")	378 (14 7/8")	546.92.882	546.92.282	546.92.782	546.92.385
610 (24")	479 (18 7/8")	546.92.883	546.92.283	546.92.783	546.92.386

Supplied With
2 Trays

Note
We recommend ordering 2 tray sets for the 1137 mm (44 3/4") frame and 3 sets for the 1635 mm (64 3/8") frame.

Dimensional data not binding. Dimensions in mm, inches are approximate. We reserve the right to alter specifications without notice.

Häfele Pull-Out Pantry

> Full extension with soft close
> Height adjustable
> 3D adjustable via front brackets
> Internal height: 1900–2200 mm (74 3/4"–86 1/2")
> Minimum interior opening width: 262 mm (10 5/16")
> Total weight capacity: 100 kg (220 lbs.)
> Material: Steel, powder-coated Finish: anthracite;
Baskets: Steel, powder-coated; Finish: chrome-plated

	Item No.
	546.80.213

Supplied With
Frame
5 Baskets
Top/bottom runners
Front brackets
Mounting instructions

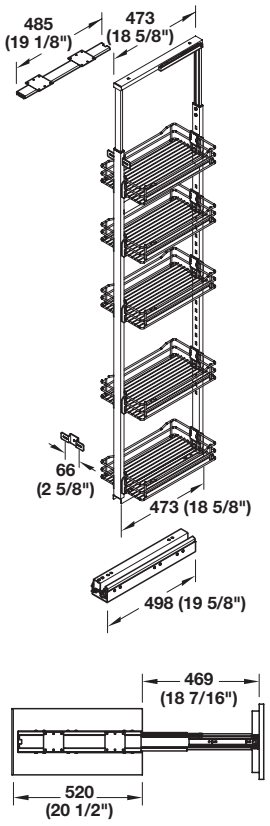

→ Non-Slip Shelf Liners

> Material: Textured Canvas; Color: umber gray

	Item No.
	546.80.689

Supplied With
1 Shelf liner cut to fit basket

Dimensional data not binding. Dimensions in mm, inches are approximate. We reserve the right to alter specifications without notice.

This page is left blank intentionally.

Dimensional data not binding. Dimensions in mm, inches are approximate. We reserve the right to alter specifications without notice.

LAVIDO Pantry Pull-Out

> This extremely flexible pantry storage solution provides high visibility and easy-to-reach access from three sides
> Synchronized, full extension pantry runner
> Infinite height adjustment feature on shelves; simply lift a lever to unlock the shelf for repositioning
> For use with a hinged door–165° hinge opening recommended, 90° opening minimum
> For 450–600 mm (18"–24") nominal cabinet widths
> Minimum inside cabinet depth: 500 mm (19 11/16")
> Weight capacity: 20 kg (44 lbs.) per shelf / 130 kg (286 lbs.) total
> Pull-out travel: 470 mm (18 1/2")

Note
There are 3 components you need to order for the Lavido Pantry:
A Pantry Frame
B Trays
C Full Extension Runner

soft&silent

→ A - Pantry Frame

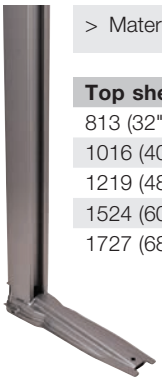

> Material: Steel; Finish: silver

Top shelf storage height	Item No.
813 (32")	549.60.901
1016 (40")	549.60.903
1219 (48")	549.60.906
1524 (60")	549.60.909
1727 (68")	549.60.911

→ C - Full Extension Runner

> Material: Steel/Plastic

Finish	Item No.
silver	549.60.990

→ B - 4 Tray Set

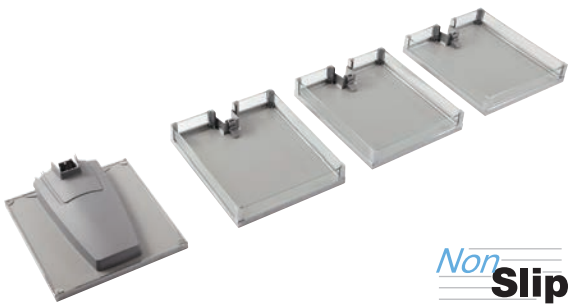

Non Slip

> Material: Melamine; Surround: Steel

Actual tray width	Nominal cabinet size	maple/ chrome	gray/ chrome	white/ chrome	anthracite/ chrome
400 (15 3/4")	450 (18")	549.64.214	549.64.224	549.64.204	549.60.254
449 (17 11/16")	500 (21")	549.64.215	549.64.225	549.64.205	549.60.255
549 (21 5/8")	600 (24")	549.64.216	549.64.226	549.64.206	549.60.256

Supplied With
Tray with integrated top runner, 3 Trays, 4 Accessory boxes, Support bracket, Fixing brace, Handle for mounting to the bottom of tray

Note
Optional to add individual trays – recommended to use 5 trays for pantries from 1448 – 1956 mm (57" – 77") and 6 trays over 1956 mm (77"). Required to order 1 tray set, additional individual trays can be ordered separately, see next page.

Dimensional data not binding. Dimensions in mm, inches are approximate. We reserve the right to alter specifications without notice.

LAVIDO Pantry Pull-Out Trays

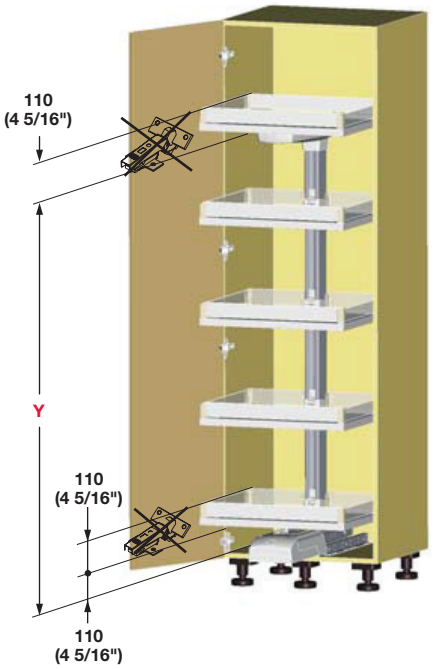

Top shelf height	H	Y
813 (32")	745 (29 5/16")	790 (31 1/8")
1016 (40")	945 (37 3/16")	990 (39")
1219 (48")	1145 (45 1/16")	1190 (46 7/8")
1524 (60")	1445 (56 7/8")	1490 (58 11/16")
1727 (68")	1645 (64 3/4")	1690 (66 9/16")

Support post height	Frame height	Total height
730 (28 3/4")	767 (30 3/16")	837 (32 15/16")
1130 (44 1/2")	1167 (45 15/16")	1237 (48 11/16")
1630 (64 3/16")	1667(65 5/8")	1737 (68 3/8")

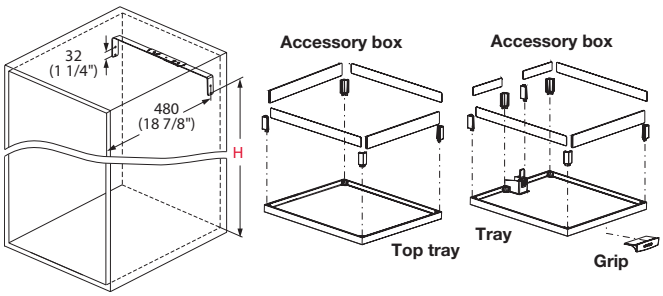

→ Individual Adjustable Tray

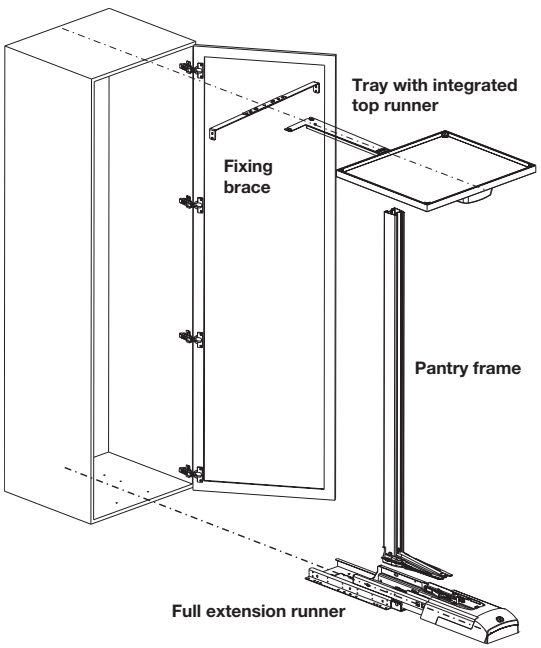

> Material: Melamine; Surround: Steel

Actual tray width	Nominal cabinet size	maple/ chrome	gray/ chrome	white/ chrome	anthracite/ chrome
403 (15 3/4")	450 (18")	549.64.244	549.64.254	549.64.234	549.60.264
449 (17 11/16")	500 (21")	549.64.245	549.64.255	549.64.235	549.60.265
549 (21 5/8")	600 (24")	549.64.246	549.64.256	549.64.236	549.60.266

→ E - Touch Auto Opener, optional

> 110V – 240V
> Material: Steel/Plastic

	Item No.
	549.60.599

Dimensional data not binding. Dimensions in mm, inches are approximate. We reserve the right to alter specifications without notice.

This page is left blank intentionally.

Dimensional data not binding. Dimensions in mm, inches are approximate. We reserve the right to alter specifications without notice.

This page is left blank intentionally.

Dimensional data not binding. Dimensions in mm, inches are approximate. We reserve the right to alter specifications without notice.

This page is left blank intentionally.

Dimensional data not binding. Dimensions in mm, inches are approximate. We reserve the right to alter specifications without notice.

This page is left blank intentionally.

Dimensional data not binding. Dimensions in mm, inches are approximate. We reserve the right to alter specifications without notice.

This page is left blank intentionally.

Dimensional data not binding. Dimensions in mm, inches are approximate. We reserve the right to alter specifications without notice.

This page is left blank intentionally.

Dimensional data not binding. Dimensions in mm, inches are approximate. We reserve the right to alter specifications without notice.

Internal Drawer Pull-Out

> Position above or below door hinges
> Mount with 533 mm (21") undermount slides, see next page
> Consider door and hinge protrusion for clearance
> Can be blocked out with "Quick Tray" system for face frame applications, see page **3.69**
> Opening should be 12 mm (1/2") wider than pull-out
> D × H: 524 × 109 mm (20 5/8" × 4 5/16")
> Material: Shelf: Melamine; Surround: Steel

→ Arena Plus Tray

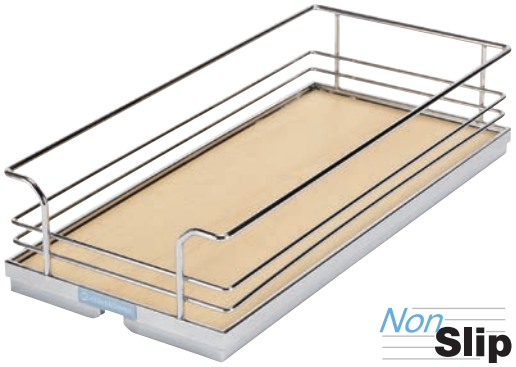

Width	maple/ champagne	maple/ chrome	white/ chrome
251 (9 7/8")	547.12.821	547.12.121	547.12.221
281 (11 1/16")	547.12.801	547.12.101	547.12.201
305 (12")	547.12.811	547.12.111	547.12.211
327 (12 7/8")	547.12.822	547.12.122	547.12.222
357 (14 1/16")	547.12.802	547.12.102	547.12.202
381 (15")	547.12.812	547.12.112	547.12.212
404 (15 7/8")	547.12.823	547.12.123	547.12.223
433 (17 1/16")	547.12.803	547.12.103	547.12.203
457 (18")	547.12.813	547.12.113	547.12.213
480 (18 7/8")	547.12.824	547.12.124	547.12.224
510 (20 1/16")	547.12.804	547.12.104	547.12.204
534 (21")	547.12.814	547.12.114	547.12.214

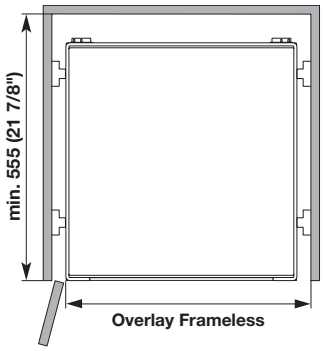

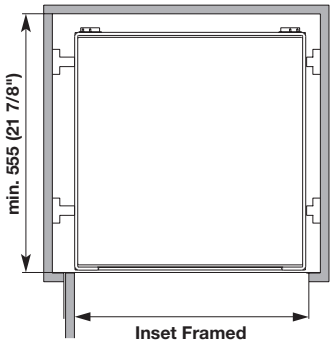

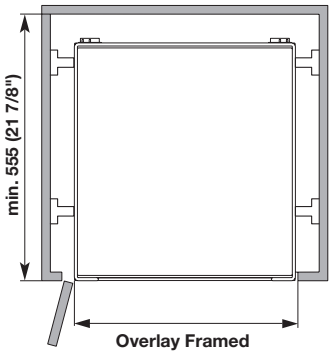

Dimensional data not binding. Dimensions in mm, inches are approximate. We reserve the right to alter specifications without notice.

Internal Drawer Pull-Out

→ Salice Full-Extension Concealed Undermount Slide

> Length: 533 mm (21")
> Weight capacity: 34 kg (75 lbs.)/pair
> Material: Steel

Finish	Item No.
zinc-plated	433.17.753

Note
Clips and brackets sold separately.

→ Clips

> Material: Plastic

Color	Item No.
gray	421.23.000

→ Face Frame Mounting Bracket

> Material: Steel

Finish	Item No.
zinc-plated	433.17.000

Dimensional data not binding. Dimensions in mm, inches are approximate. We reserve the right to alter specifications without notice.

Roll-Out Trays

> Position above or below door hinges
> 15.8 mm (5/8") solid maple with dovetail construction
> Two height options: 89 mm (3 1/2") and 197 mm (7 3/4")
> For face frame and frameless cabinets
> Notched and drilled for undermount slides
> Depth: 540 mm (21 1/8")
> Material: Maple

Note
The sizes listed are the outside cabinet widths with the option for face frame or frameless in each.
There are 3 steps to order the Roll-Out Trays:
1. Choose your tray
2. Choose your drawer slide
3. Choose your pilaster system

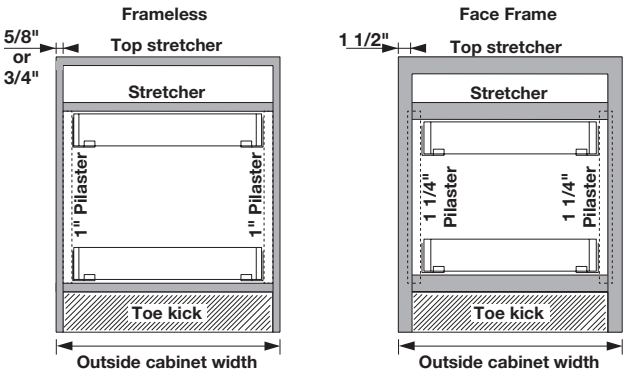

→ 1. Trays

Face frame			
Cabinet width	**Tray height**	**Tray width**	**Item No.**
380 (15")	89 (3 1/2")	268 (10 9/16")	557.59.112
457 (18")	89 (3 1/2")	344 (13 9/16")	557.59.113
534 (21")	89 (3 1/2")	421 (16 9/16")	557.59.115
610 (24")	89 (3 1/2")	497 (19 9/16")	557.59.117
380 (15")	197 (7 3/4")	268 (10 9/16")	557.59.132
457 (18")	197 (7 3/4")	344 (13 9/16")	557.59.133
534 (21")	197 (7 3/4")	421 (16 9/16")	557.59.135
610 (24")	197 (7 3/4")	497 (19 9/16")	557.59.137

Frameless			
Cabinet width	**Tray height**	**Tray width**	**Item No.**
380 (15")	89 (3 1/2")	281 (11 1/16")	557.59.122
457 (18")	89 (3 1/2")	357 (14 1/16")	557.59.123
534 (21")	89 (3 1/2")	433 (17 1/16")	557.59.125
610 (24")	89 (3 1/2")	510 (20 1/16")	557.59.127
380 (15")	197 (7 3/4")	281 (11 1/16")	557.59.142
457 (18")	197 (7 3/4")	357 (14 1/16")	557.59.143
534 (21")	197 (7 3/4")	433 (17 1/16")	557.59.145
610 (24")	197 (7 3/4")	510 (20 1/16")	557.59.147

Dimensional data not binding. Dimensions in mm, inches are approximate. We reserve the right to alter specifications without notice.

2. Drawer Slides

Note
Order 1 pair of slides and clips for each tray.

→ Grass Dynapro 16-2D

> Material: Steel; Finish: zinc-plated

Slide/clip	Item No.
533 (21")	433.19.455
Clip Set	433.19.028

→ Salice Futura

> Material: Steel; Finish: zinc-plated

Slide/clip	Item No.
533 (21")	433.17.753
Clip Set	421.23.000

3. Pilaster System

Note
Order 1 pilaster kit for each cabinet.

→ Quik Tray

> Height: 511 mm (20 1/8")
> Material: Plastic; Color: white

Type	Width	Item No.
Frameless	26 (1")	431.01.710
Face Frame	32 (1 1/4")	431.01.711

Supplied With
4 Pilasters
20 Mounting screws
8 Hook dowels with mounting screws

→ X Brackets

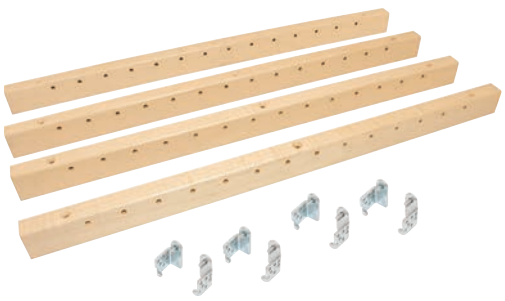

> Width: 32 mm (1 1/4")
> Material: Maple; Brackets: Metal

Height	Item No.
530 (20 7/8")	431.01.800
711 (28")	431.01.810
1474 (58 5/8")	431.01.820

Supplied With
4 Pilasters
8 Brackets with screws

Dimensional data not binding. Dimensions in mm, inches are approximate. We reserve the right to alter specifications without notice.

iMOVE Pull Down Unit

- > Position above or below door hinges
- > Cabinet items are easily reachable
- > Pulling gently on the handle delivers a perfect sequence of movement
- > Suitable for hinged doors and lift-up fittings
- > Shelf stays where you let go when loaded
- > Loading function: Pull shelf all the way down and it will hold in place for loading, only needed when empty
- > A perfect fit for every wall cabinet, even those impossible to reach top shelves
- > Weight capacity: Up to 8 kg (17.64 lbs.)
- > Material: Surround: Steel; Bottom and back: Melamine

Double, Silver/Maple

Single, Silver/White

Shim

Version	Shelf #	A	B	C min	champagne/ maple	silver/ maple	silver/ white
Face Frame, with shim	single	533 (21")	495–501 (19 1/2"–19 3/4")	457 (18")	504.69.812	504.69.912	504.69.712
	single	609 (24")	571–578 (22 1/2"–22 3/4")	533 (21")	504.69.813	504.69.913	504.69.713
	single	685 (27")	647–654 (25 1/2"–25 3/4")	609 (24")	504.69.814	504.69.914	504.69.714
	single	762 (30")	724–730 (28 1/2"–28 3/4")	685 (27")	504.69.815	504.69.915	504.69.715
	single	838 (33")	800–806 (31 1/2"–31 3/4")	762 (30")	504.69.816	504.69.916	504.69.716
	single	914 (36")	876–882 (34 1/2"–34 3/4")	838 (33")	504.69.817	504.69.917	504.69.717
	double	533 (21")	495–501 (19 1/2"–19 3/4")	457 (18")	504.69.822	504.69.922	504.69.722
	double	609 (24")	571–578 (22 1/2"–22 3/4")	533 (21")	504.69.823	504.69.923	504.69.723
Frameless	single	533 (21")	495–501 (19 1/2"–19 3/4")	495–501 (19 1/2"–19 3/4")	504.69.832	504.69.932	504.69.732
	single	609 (24")	571–578 (22 1/2"–22 3/4")	571–578 (22 1/2"–22 3/4")	504.69.833	504.69.933	504.69.733
	single	685 (27")	647–654 (25 1/2"–25 3/4")	647–654 (25 1/2"–25 3/4")	504.69.834	504.69.934	504.69.734
	single	762 (30")	724–730 (28 1/2"–28 3/4")	724–730 (28 1/2"–28 3/4")	504.69.835	504.69.935	504.69.735
	single	838 (33")	800–806 (31 1/2"–31 3/4")	800–806 (31 1/2"–31 3/4")	504.69.836	504.69.936	504.69.736
	single	914 (36")	876–882 (34 1/2"–34 3/4")	876–882 (34 1/2"–34 3/4")	504.69.837	504.69.937	504.69.737
	double	533 (21")	495–501 (19 1/2"–19 3/4")	495–501 (19 1/2"–19 3/4")	504.69.842	504.69.942	504.69.742
	double	609 (24")	571–578 (22 1/2"–22 3/4")	571–578 (22 1/2"–22 3/4")	504.69.843	504.69.943	504.69.743

Supplied With
Mounting material and instructions

Dimensional data not binding. Dimensions in mm, inches are approximate. We reserve the right to alter specifications without notice.

iMOVE Pull Down Unit

→ Installation guide iMove Single Shelf

→ Installation guide iMove Double Shelf

Technical Information

Framed cabinet

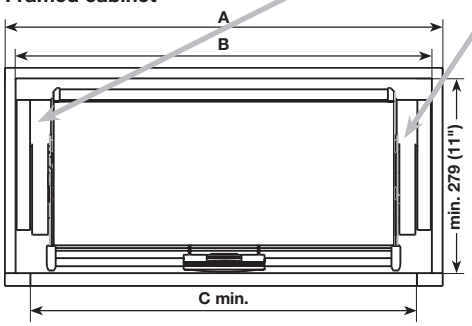

Frameless cabinet

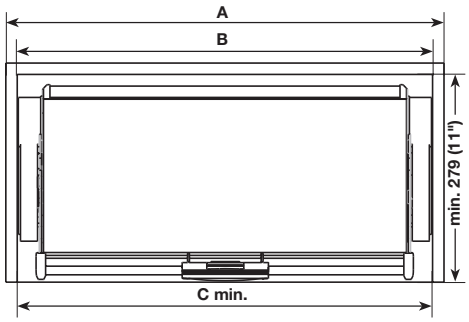

A: cabinet size
B: cabinet interior dimension
C: clear door opening

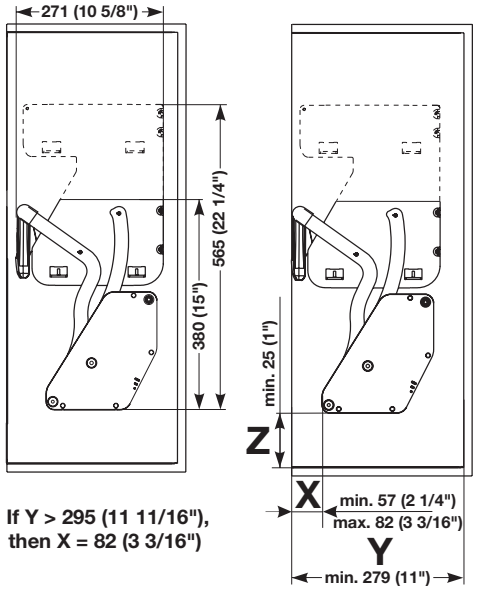

If Y > 295 (11 11/16"), then X = 82 (3 3/16")

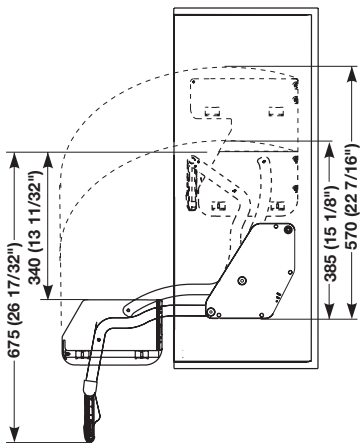

Dimensions	Hinged door	Hinged door
Hinge protrusion	< 25 (1")	< 25 (1")
Installation height, hinge	65 (2 9/16")	65 (2 9/16")
Installation height, iMove	25 (1")	80 (3 5/32")
Installation depth, iMove	57 (2 1/4")	57 (2 1/4")
Clear inside cabinet depth	y min 279 (11")	y min 279 (11")
Minimum cabinet height*	520 (20 7/16")	580 (22 7/8")

*Cabinet heights vary with the individual installation situations.

Dimensions	Hinged door	Hinged door
Hinge protrusion	< 25 (1")	< 25 (1")
Installation height, hinge	65 (2 9/16")	65 (2 9/16")
Installation height, iMove	25 (1")	80 (3 5/32")
Installation depth, iMove	57 (2 1/4")	57 (2 1/4")
Clear inside cabinet depth	y min 279 (11")	y min 279 (11")
Minimum cabinet height*	710 (27 29/32")	770 (30 5/16")

*Cabinet heights vary with the individual installation situations.

Dimensional data not binding. Dimensions in mm, inches are approximate. We reserve the right to alter specifications without notice.

Spice Rack

Door Mounted Frame

> Applicable for left and right hand installation
> Frame can be used behind doors or with optional slide for pull-out
> W × D × H: 19 × 254 × 595 mm (3/4" × 10" × 23 1/2")
> Material: Steel, powder-coated

→ 1. Frame

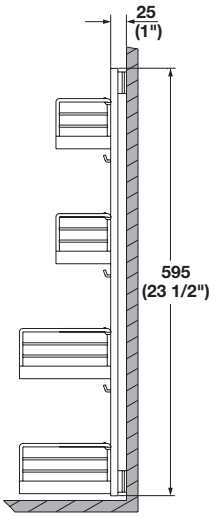

Mounting Hardware

Finish	Item No.
champagne	543.34.830
silver	543.34.930

Supplied With
Mounting hardware for door mounting

Dimensional data not binding. Dimensions in mm, inches are approximate. We reserve the right to alter specifications without notice.

Spice Rack

Pull-Out Frame

→ Pull-Out Slides

> 35 mm ball bearing, side mounted, full extension
> Installed length: 250 mm (9 7/8")
> Extension length: 254 mm (10")
> Material: Slide: Steel, powder-coated, galvanized
Brackets: Steel; Finish: champagne

	Item No.
	543.34.800

Supplied With
Brackets

→ Arena Plus Tray Set

> D × H: 250 × 70 mm (9 7/8" × 2 3/4")
> Material: Melamine; Surround: Steel, powder-coated

Width	maple/ champagne	maple/ chrome	white/ chrome	anthracite/ chrome
76 (3")	543.34.851	543.34.151	543.34.251	543.34.361
127 (5")	543.34.852	543.34.152	543.34.252	543.34.362

Dimensional data not binding. Dimensions in mm, inches are approximate. We reserve the right to alter specifications without notice.

Spice Rack

- > Installs in under 5 minutes
- > Sized to fit most 457 and 610 mm (18" and 24") wide face frame cabinets
- > 57 and 76 mm (2" and 3") width compartments hold up to 3 kg (7 lbs.)
- > 102, 127 and 152 mm (4", 5" and 6") compartment widths hold up to 9 kg (20 lbs.)
- > Unique upper cabinet design keeps supplies close to cooking and prep areas

Service+

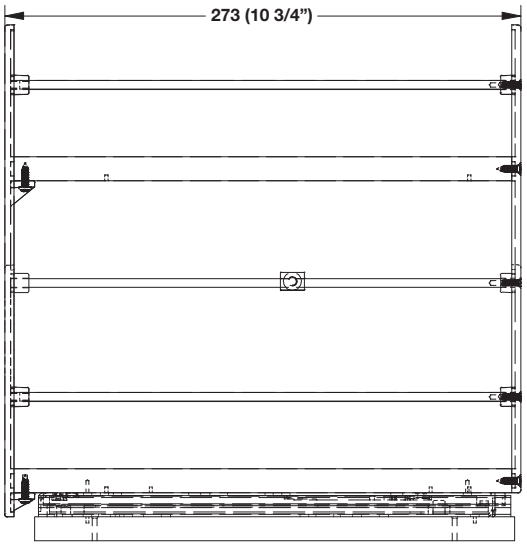

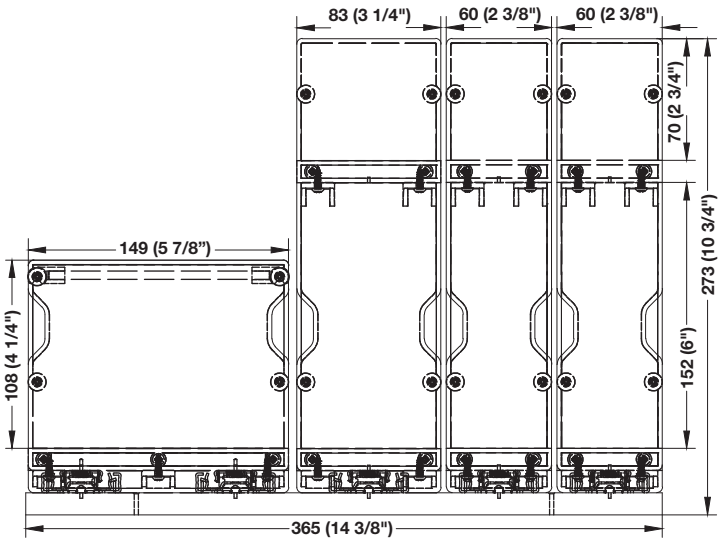

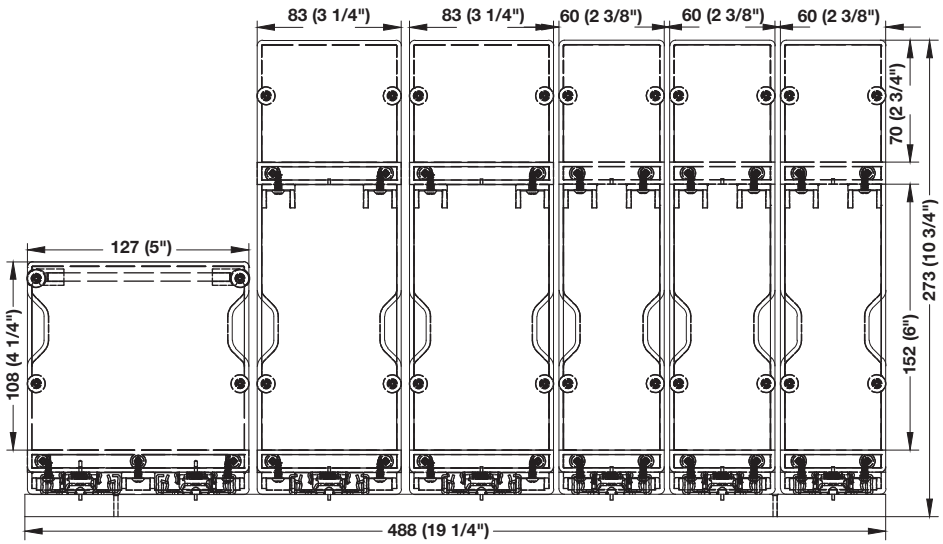

Dimensional data not binding. Dimensions in mm, inches are approximate. We reserve the right to alter specifications without notice.

Spice Rack

Service+

→ Spice Rack

> D × H: 273 x 273 mm (10 3/4" × 10 3/4")
> Material: Textured ABS/Stainless Steel/Birch

Width	Cabinet width	Item No.
365 (14 3/8")	457 (18")	545.06.101
488 (19 1/4")	610 (24")	545.06.102

→ Individual Pull-Out Spice Racks

> Depth: 273 mm (10 3/4")
> Material: Textured ABS/Stainless Steel/Birch

Unit width	Base plate width	Height	Item No.
60 (2 3/8")	64 (2 1/2")	273 (10 3/4")	545.06.150
83 (3 1/4")	86 (3 3/8")	273 (10 3/4")	545.06.151
102 (4")	105 (4 1/8")	273 (10 3/4")	545.06.152
127 (5")	130 (5 1/8")	146 (5 3/4")	545.06.153
149 (5 7/8")	152 (6")	146 (5 3/4")	545.06.154

Dimensional data not binding. Dimensions in mm, inches are approximate. We reserve the right to alter specifications without notice.

Dispensa BPO

> With soft close
> For overlay and inset doors
> Height adjustable frame mounts behind full door
> Trays are height adjustable
> Top/bottom mounting with full extension frames provide full access
> Weight capacity: 27 kg (60 lbs.)

soft&silent

→ Frame

> 5 tray positions
> W × D: 95 × 543 mm (3 3/4" × 22 1/2")
> Installed height (A): 670–812 mm (26 3/8"–32")
> Material: Steel, powder-coated

Finish	Item No.
champagne	546.62.826
silver	546.62.926

Supplied With Slides, Front brackets

Note Order wide bottom door bracket separately.

→ Short Frame

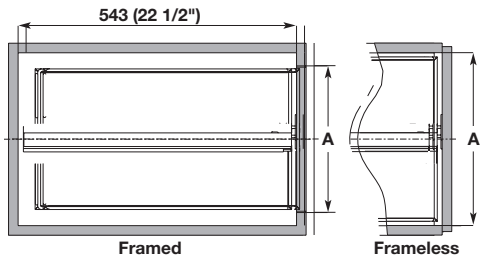

> For use in under drawer and reduced height applications
> 4 tray positions
> W × D: 95 × 543 mm (3 3/4" × 22 1/2")
> Installed height (A): 508–711 mm (20"–28")
> Material: Steel, powder-coated

Finish	Item No.
champagne	546.62.835
silver	546.62.935

Supplied With Slides, Front brackets

Note Order wide bottom door bracket separately.

→ Wide Bottom Door Bracket, optional

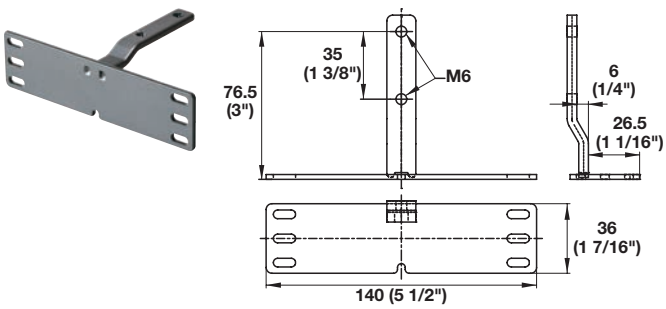

> W x H: 140 x 36 mm (5 1/2" x 1 7/16")
> Material: Steel

Finish	Item No.
champagne	545.09.890
silver	545.09.990

Supplied With
Slides, Front brackets

Note
Used to replace standard bottom bracket only. Order 1 pc. per unit.

Dimensional data not binding. Dimensions in mm, inches are approximate. We reserve the right to alter specifications without notice.

Dispensa BPO Trays

> Height: 105 mm (4 1/8")
> Material: Melamine; Surround: Steel, powder-coated

→ Arena Plus Tray Set

Non Slip

W × D	A min.	maple/champagne	maple/chrome	white/chrome	gray/chrome	anthracite/chrome
102 × 500 (4" × 19 3/4")	114 (4 1/2")	546.63.860	546.63.160	546.63.260	546.63.560	545.09.340
127 × 500 (5" × 19 3/4")	140 (5 1/2")	546.63.861	546.63.161	546.63.261	–	545.09.341
178 × 500 (7" × 19 3/4")	191 (7 1/2")	546.63.862	546.63.162	546.63.262	546.63.562	545.09.342
203 × 518 (8" × 20 3/8")	216 (8 1/2")	546.63.812	546.63.112	546.63.212	–	546.63.580
254 × 518 (10" × 20 3/8")	267 (10 1/2")	546.63.832	546.63.132	546.63.232	546.63.532	546.63.581
279 × 518 (11" × 20 3/8")	292 (11 1/2")	546.63.813	546.63.113	546.63.213	–	546.63.582
330 × 518 (13" × 20 3/8")	343 (13 1/2")	546.63.833	546.63.133	546.63.233	546.63.533	546.63.583
356 × 518 (14" × 20 3/8")	368 (14 1/2")	546.63.814	546.63.114	546.63.214	–	546.63.584
406 × 518 (16" × 20 3/8")	419 (16 1/2")	546.63.834	546.63.134	546.63.234	546.63.534	546.63.585
432 × 518 (17" × 20 3/8")	445 (17 1/2")	546.63.815	546.63.115	546.63.215	–	546.63.587
483 × 518 (19" × 20 3/8")	495 (19 1/2")	546.63.835	546.63.135	546.63.235	–	546.63.588

Supplied With 2 Trays

→ Spice Tray

> Clear cabinet opening: min. 254 mm (10")
> Width of tray: 114 mm (4 1/2")
> Material: Steel

Finish	Item No.
champagne	545.09.899
silver	545.09.999

Dimensional data not binding. Dimensions in mm, inches are approximate. We reserve the right to alter specifications without notice.

Dispensa BPO Boxes and Trays

→ Youboxx Set 2

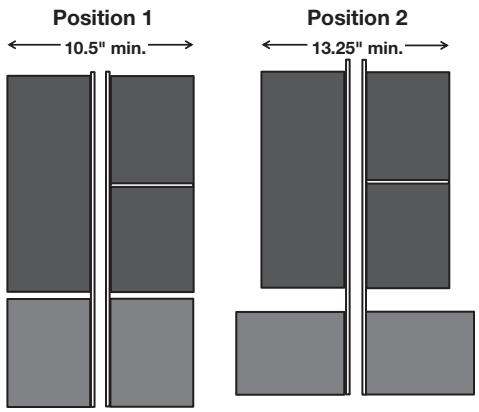

> Material: Plastic; Rails: Steel, powder-coated

Finish/Box	Item No.
champagne/champagne	545.09.872
silver/white	545.09.972

Supplied With
2 1 L boxes
2 2.1 L box
2 Lids
1 Large divider
2 Traverse rails

→ Youboxx Set 1

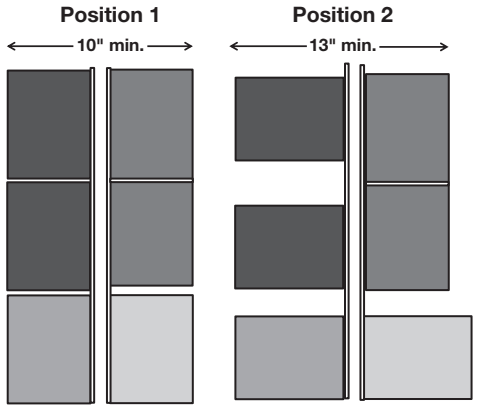

> Material: Plastic; Rails: Steel, powder-coated

Finish/Box	Item No.
champagne/champagne	545.09.861
silver/white	545.09.961

Supplied With 2 1 L boxes, 1 2.1 L box, 2 2 L boxes, 1 Slotted knife block, 2 Lids, 2 Traverse rails

→ Metal Tray Set

> D x H: 518 x 115 mm (20 3/8" x 4 1/2")
> Material: Steel, powder-coated

Width	champagne	silver
76 (3.3")	545.09.800	545.09.900
100 (4")	545.09.810	545.09.910
126 (5")	545.09.821	545.09.921
178 (7")	545.09.832	545.09.932
254 (10")	–	545.08.903

Supplied With 2 Trays

Dimensional data not binding. Dimensions in mm, inches are approximate. We reserve the right to alter specifications without notice.

Dispensa BPO Fineline™ Boxes

> A beautiful combination of the warmth of wood with European functional hardware
> Combine with other Fineline interior cabinet accessories for a consistent design throughout your entire kitchen

Note
Design Patent #D894.653

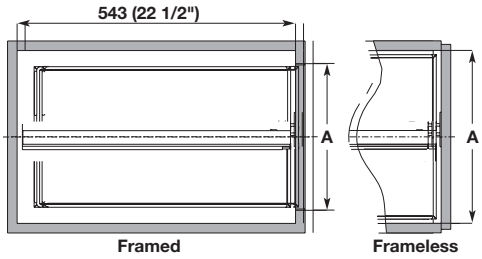

soft&silent

→ Boxes

> D x H: 475 x 71 mm (18 3/4" x 2 13/16")

Width	A	Birch	Walnut
101 (4")	114 (4 1/2")	545.96.880	545.96.780
126 (5")	140 (5 1/2")	545.96.881	545.96.781
178 (7")	191 (7 1/2")	545.96.882	545.96.782
204 (8")	216 (8 1/2")	545.96.883	545.96.783
254 (10")	267 (10 1/2")	545.96.884	545.96.784
279 (11")	292 (11 1/2")	545.96.885	545.96.785
330 (13")	343 (13 1/2")	545.96.886	545.96.786
356 (14")	368 (14 1/2")	545.96.887	545.96.787
406 (16")	419 (16 1/2")	545.96.888	545.96.788
432 (17")	445 (17 1/2")	545.96.889	545.96.789
482 (19")	495 (19 1/2")	545.96.890	545.96.790

→ Bracket Set

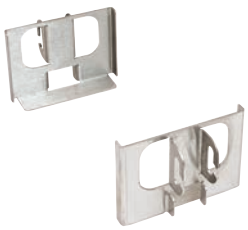

For Box Width	Steel/ silver	Steel/ champagne	304 Stainless Steel/brushed
101 (4")	545.96.900	545.96.800	545.96.000
126 (5")	545.96.901	545.96.801	545.96.001
178 (7")	545.96.902	545.96.802	545.96.002
204 (8")	545.96.903	545.96.803	545.96.003
254 (10")	545.96.904	545.96.804	545.96.004
279 (11")	545.96.905	545.96.805	545.96.005
330 (13")	545.96.906	545.96.806	545.96.006
356 (14")	545.96.907	545.96.807	545.96.007
406 (16")	545.96.908	545.96.808	545.96.008
432 (17")	545.96.909	545.96.809	545.96.009
482 (19")	545.96.910	545.96.810	545.96.010

Dimensional data not binding. Dimensions in mm, inches are approximate. We reserve the right to alter specifications without notice.

Dispensa BPO Bakers' Trays

→ Baker's Tray Organizer Set

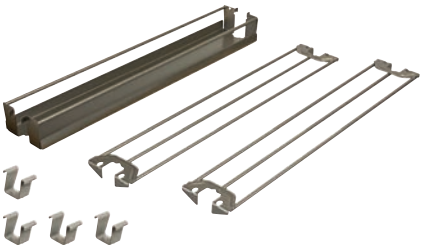

> Width: 84 mm (3 5/16")
> Material: Metal, Wire and Plastic

Finish	Item No.
champagne	545.09.850
silver	545.09.950

Supplied With
1 Shelf, 4 Bumpers, 2 Racks (3 wires), 4 Clips

→ Baker's Tray Organizer Set

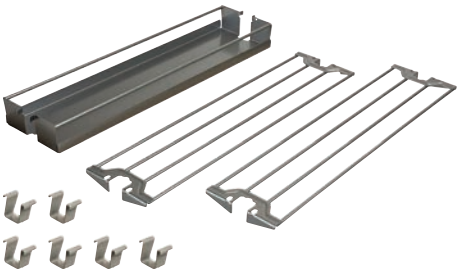

> Width: 126 mm (5")
> Material: Metal, Wire and Plastic

Finish	Item No.
champagne	545.09.851
silver	545.09.951

Supplied With
1 Shelf, 4 Bumpers, 2 Racks (4 wires), 6 Clips

→ Baker's Tray Organizer Set

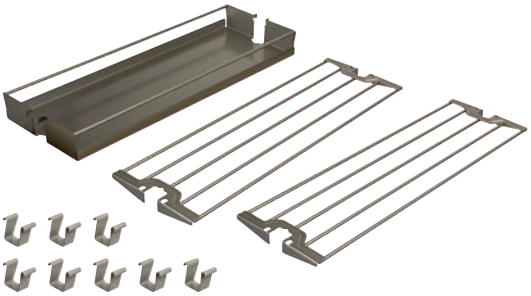

> Width: 178 mm (7")
> Material: Metal, Wire and Plastic

Finish	Item No.
champagne	545.09.852
silver	545.09.952

Supplied With
1 Shelf, 4 Bumpers, 2 Racks (5 wires), 8 Clips

Dimensional data not binding. Dimensions in mm, inches are approximate. We reserve the right to alter specifications without notice.

Wood Pull-Outs

→ Wall Pull-Out

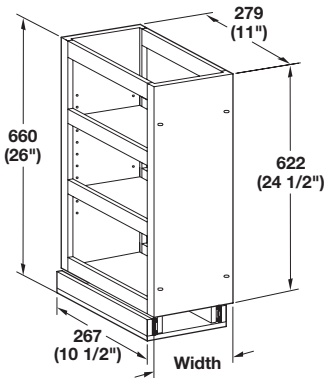

> Without case
> Adjustable shelves
> For 229 mm (9") and 305 mm (12") framed cabinets
> Full extension 45 kg (100 lb.) capacity ball bearing slides
> Material: Maple and Birch

Width	Item No.
124 (4 7/8")	545.47.212
200 (7 7/8")	545.47.214

→ Wall Filler Pull-Out

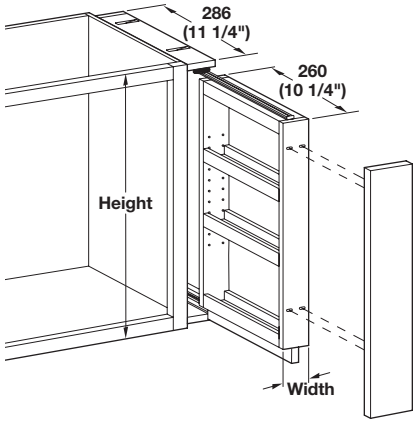

> With case
> Material: Maple and Birch

W x H	Item No.
76 × 762 (3" × 30")	545.47.256
76 × 914 (3" × 36")	545.47.257
76 × 1067 (3" × 42")	545.47.258
152 × 762 (6" × 30")	545.47.266
152 × 914 (6" × 36")	545.47.267
152 × 1067 (6" × 42")	545.47.268

Dimensional data not binding. Dimensions in mm, inches are approximate. We reserve the right to alter specifications without notice.

Base Pull-Out Comfort II

> Weight capacity: 20 kg (44 lbs.)
> W x D: 40 x 486 mm (1 9/16" x 19 1/8")
> Min. internal cabinet width: basket + 33 mm (1 5/16")
> Min. internal cabinet depth: 496 mm (19 1/2")
> Material: Steel, power-coated: Finish: silver RAL 9006

Mounting situation:

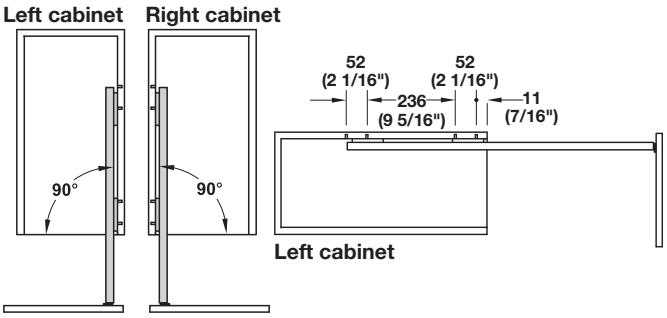

Base unit pull out, straight version (90°)

→ Full Extension Frame

Height	Left	Right
502 (19 3/4")	545.56.230	545.56.231
662 (26 1/16")	545.56.221	545.56.220

Supplied with
Door brackets

Dimensional data not binding. Dimensions in mm, inches are approximate. We reserve the right to alter specifications without notice.

Base Pull-Out Comfort II Trays

→ Arena Plus Tray

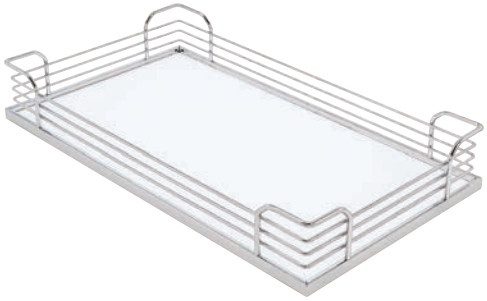

> D × H: 470 × 88 mm (18 1/2" × 3 1/2")
> Material: Melamine; Surround: Steel

Width	maple/chrome	white/chrome
110 (4 3/8")	545.60.175	545.60.275
160 (6 1/4")	545.60.176	545.60.276
228 (9")	545.60.177	545.60.277
295 (11 5/8")	545.60.178	545.60.278

→ Wire Basket

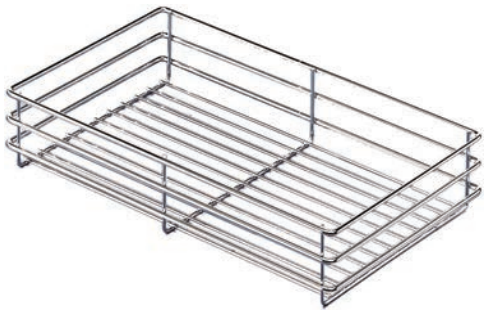

> D × H: 470 × 75 mm (18 1/2" × 3")
> Material: Steel; Finish: chrome

Width	Item No.
110 (4 3/8")	545.60.208
160 (6 1/4")	545.60.217
210 (8 1/4")	545.60.244
320 (12 1/2")	545.60.253

Dimensional data not binding. Dimensions in mm, inches are approximate. We reserve the right to alter specifications without notice.

Häfele Base Pull-Out

- > Full extension with soft close
- > Screw mounted on right side and front panels
- > 3D adjustable via front brackets
- > Internal cabinet width: >112 mm (4 7/16")
- > Internal cabinet depth: 515 mm (20 1/2")
- > Internal cabinet height: 565 mm (22 1/4")
- > For cabinet width: 150 mm (5 7/8")
- > W x D: 95 x 485 mm (3 3/4" x 19 3/32")
- > Weight capacity: 12 kg (26 lbs.)
- > Material: Steel, powder-coated Finish: anthracite
  Baskets: Finish: chrome-plated; Runners: zinc-plated

	Item No.
	549.37.200

Supplied With
Frame
Baskets
Top/bottom runners
Front brackets
Mounting instructions

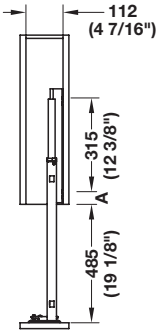

Dimensional data not binding. Dimensions in mm, inches are approximate. We reserve the right to alter specifications without notice.

Häfele Base Pull-Out

> Full extension with soft close
> Reversible; mounts left or right
> Screw mounted to side and front panels
> Internal cabinet depth: 495 mm (19 7/16")
> Internal cabinet height: 650 mm (25 1/2")
> Weight capacity: 20 kg (44 lbs.)
> Internal cabinet width: 264 mm (10 3/8")

→ Frame

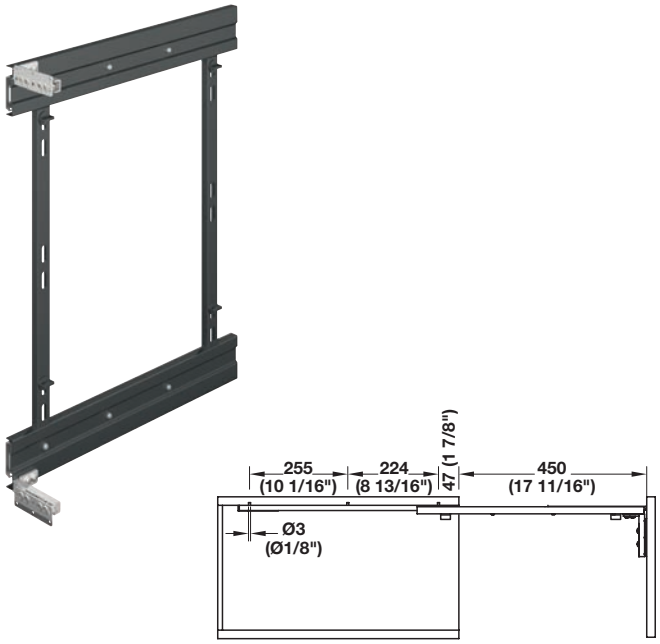

> Material: Steel, powder-coated; Runners: zinc-plated

Finish	Item No.
anthracite	549.09.300

→ Hanging Basket

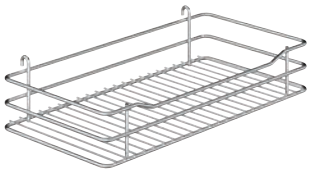

> For cabinet width: 300 mm (11 13/16")
> W x D x H: 230 x 460 x 80 mm (9 1/16" x 18 1/8 x 3 1/8")
> Material: Steel

Finish	Item No.
chrome-plated	549.09.253

Supplied With
2 Baskets

→ Non-Slip Shelf Liners

> Material: Textured Canvas; Color: umber gray

	Item No.
	549.09.699

Supplied With
1 Shelf liner cut to fit basket

Dimensional data not binding. Dimensions in mm, inches are approximate. We reserve the right to alter specifications without notice.

Base Unit Pull-Out

> For cabinets with hinged doors
> Compact design for efficiently storing your everyday kitchen utensils
> Automatically glides out when opening the cabinet door
> Items are accessible from 3 sides
> Removable dispenser with a transparent lid for storage of spices or other small items
> Special sections for knives, wooden spoons and chopping boards
> Mounts left or right
> Material: Steel, powder-coated; Boxes: ABS, UV resistant

soft&silent

→ Kitchen Tower 600

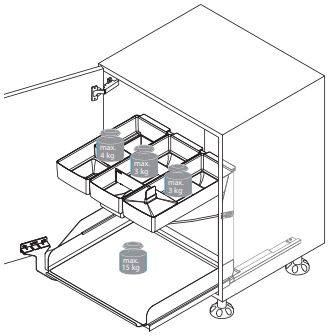

> For 610 mm (24") frameless cabinets with a door/drawer or full height door
> Minimum inside cabinet dimensions: W x D x H: 562 x 500 x 560 mm (22 1/8" x 19 11/16" x 22 1/16")

Finish	Item No.
silver	545.17.956
anthracite	545.17.356

Supplied with
3 Upper level trays with dividers and a 4-section spice dispenser*
4 Magnetic dividers
Non-slip mat
Chopping board holder
Full extension slide
Door fitting

→ Kitchen Tower 450

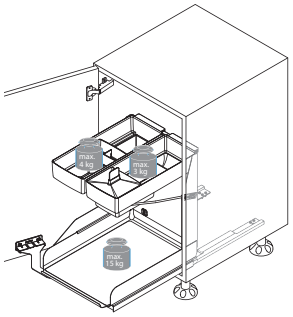

> For 457 mm (18") frameless cabinets with a door/drawer or full height door
> Minimum inside cabinet dimensions: W x D x H: 412 x 500 x 560 mm (16 1/4" x 19 11/16" x 22 1/16")

Finish	Item No.
silver	545.17.954
anthracite	545.17.354

Supplied with
2 Upper level trays with dividers and a 4-section spice dispenser*
2 Magnetic dividers
Non-slip mat
Chopping board holder
Full extension slide
Door fitting

Note
* Food and dishwasher safe

Dimensional data not binding. Dimensions in mm, inches are approximate. We reserve the right to alter specifications without notice.

Base Pull-Outs

> Organize your baking trays, serving trays, or cutting boards
> Make the most of a narrow space
> Mounts on the right hand side
> Minimum inside cabinet width: 112 mm (4 1/2")
> Minimum inside cabinet depth: 481 mm (19")
> Weight capacity: 12 kg (26 lbs.)

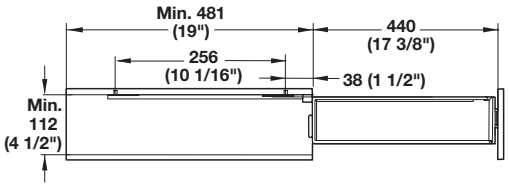

soft&silent

→ Baking Tray 90°

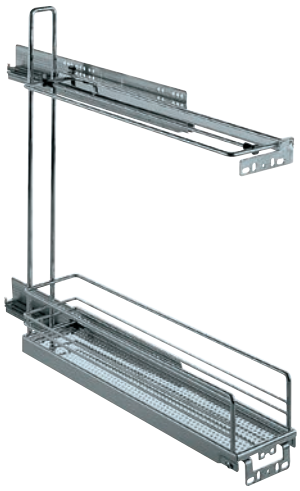

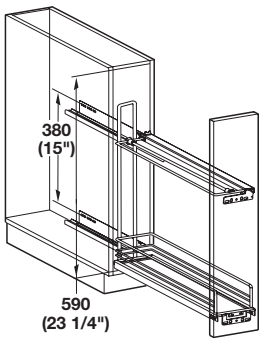

> Minimum inside cabinet height: 540 mm (21 1/4")
> Material: Steel

Finish	Item No.
chrome	545.61.272

Supplied With
Full extension slides

→ Towel Rail 90°

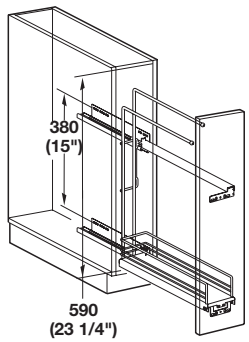

> Minimum inside cabinet height: 590 mm (23 1/4")
> Material: Steel

Finish	Item No.
chrome	545.61.262

Supplied With
Full extension slides

→ Movable Divider

> For use on bottom tray
> Material: Steel; Clip holder: Plastic; Color: black

Finish	Item No.
chrome	545.61.250

Dimensional data not binding. Dimensions in mm, inches are approximate. We reserve the right to alter specifications without notice.

Base Pull-Outs

> Make the most of a narrow space
> Mounts on the right-hand side
> Slides are concealed under the metal trays
> Accommodates items with Ø90 mm (3 1/2")
> Minimum inside cabinet width: 112 mm (4 1/2")
> Minimum inside cabinet depth: 481 mm (19")
> Weight capacity: 12 kg (26 lbs.)
> Material: Steel; Finish: chrome

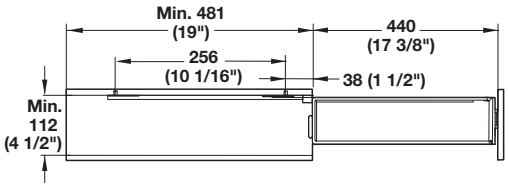

soft&silent

→ 2-tier 90°

> Minimum inside cabinet height: 540 mm (21 1/4")

	Item No.
	545.61.232

Supplied With
Textured surface metal trays
Full extension slides

→ 3-tier 90°

> Minimum inside cabinet height: 755 mm (29 3/4")

	Item No.
	545.61.233

Supplied With
Textured surface metal trays
Full extension slides

Note
This item does not fit inside a standard height base cabinet.

Dimensional data not binding. Dimensions in mm, inches are approximate. We reserve the right to alter specifications without notice.

Base Pull-Outs

> Pull-outs install left or right
> Material: Steel; Finish: chrome

→ Lockable Compartment

> Provides convenient access to cleaning supplies
> D × W × H: 202 × 432 × 440 mm (8" × 17" × 17 3/8")

	Item No.
	545.48.248

Supplied With
Runners

→ Under-Sink Storage

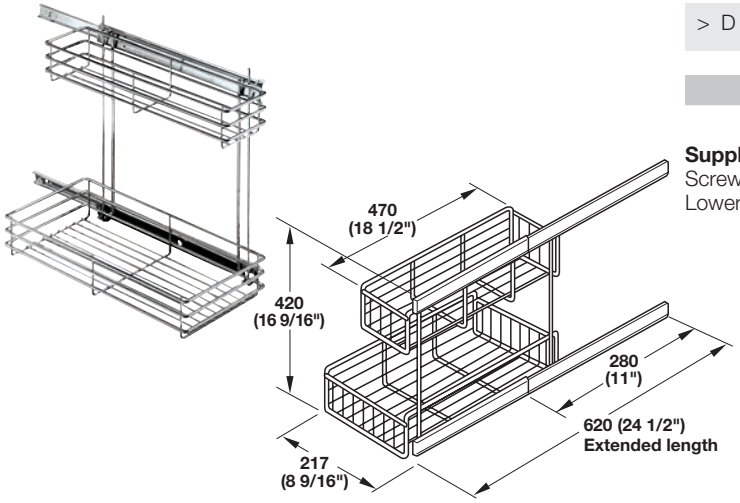

> D × W × H: 217 × 470 × 420 mm (8 9/16" × 18 1/2" × 16 9/16")

	Item No.
	545.48.239

Supplied With
Screw mounted upper runners
Lower runners

Dimensional data not binding. Dimensions in mm, inches are approximate. We reserve the right to alter specifications without notice.

Portero

> Integrated slide
> Acid resistant plastic trays are dishwasher safe
> Top swivel basket can be pushed to the left or right
> Bottom-mounted full extension slides
> Removable caddy for easy transport of cleaning supplies
> Material: Steel

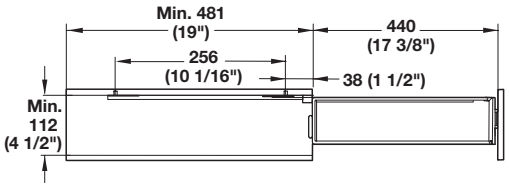

soft&silent

→ Storage Unit Pull-Out

> 1 removable basket
> W × D × H: 161 × 495 × 400 mm (6 3/8" × 19 1/2" × 15 3/4")

Finish	Item No.
chrome	545.48.260
champagne	545.48.860

Supplied With
Base
Removable basket with handle
4 Dividers

→ Storage Unit Pull-Out

> 3 baskets (1 removable)
> W × D × H: 279 × 495 × 507 mm (11" × 19 1/2" × 20")

Finish	Item No.
chrome	545.48.262
champagne	545.48.862

Supplied With
Base
Removable basket with handle
Basket without handle
Swivel basket
8 Dividers

Dimensional data not binding. Dimensions in mm, inches are approximate. We reserve the right to alter specifications without notice.

Towel Rack Pull-Outs

> Length of mounting bracket: 399 mm (15 3/4")
> Length of extending rails: 430 mm (17")
> Depth: 460 mm (18 1/8")
> Installation length, extended bar lengths and installed heights of both models are the same
> Under or side mounted
> Material: Aluminum anodized or powder-coated

→ 2 Bars, extendable

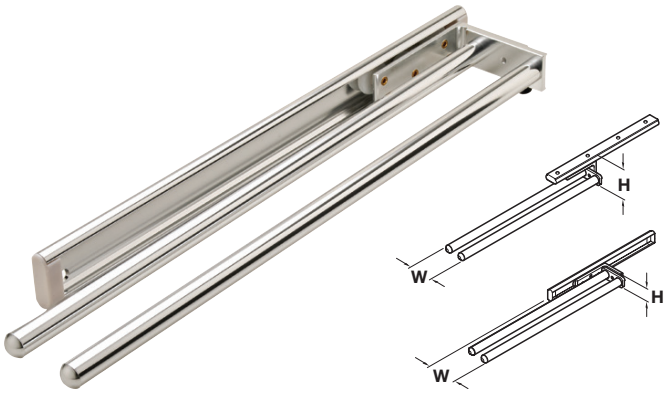

> W x H: Under mount: 65 × 73 mm (2 1/2" × 3")
> W x H: Side mount: 91 × 38 mm (3 5/8" × 1 1/2")

Finish	Item No.
chrome	510.54.221
silver anodized	510.54.921

Supplied With
2 Precision plastic rollers
2 Plastic end caps

→ 3 Bars, extendable

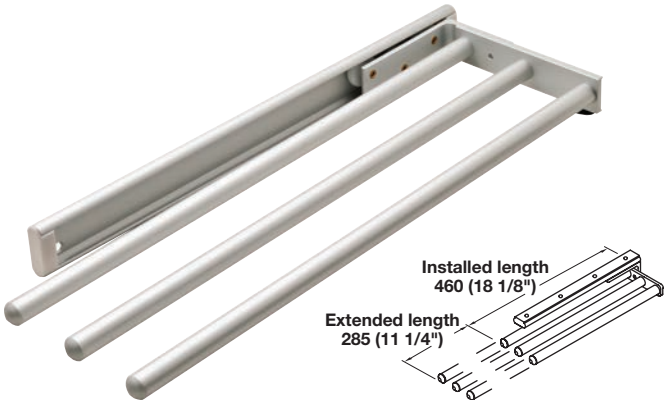

> W x H: Under mount: 127 × 76 mm (5" × 3")
> W x H: Side mount: 152 × 38 mm (6" × 1 1/2")

Finish	Item No.
chrome	510.54.232
silver anodized	510.54.932

Supplied With
3 Precision plastic rollers
3 Plastic end caps

Dimensional data not binding. Dimensions in mm, inches are approximate. We reserve the right to alter specifications without notice.

Base Cabinet Pull-Outs

> For use as a pull-out in 229 mm (9"), 305 mm (12") and 381 mm (15") framed cabinets
> Full extension 36 kg (80 lbs.) weight capacity Grass Elite undermount slides
> Top shelf is open for easy access
> Door mount brackets provide micro adjustment
> With adjustable guide bushings for stability
> D x H: 581 x 644 mm (22 7/8" x 25 3/8")
> Material: Maple

→ Cabinet Pull-Out

soft&silent

Width	Width of base	Item No.
133 (5 1/4")	150 (5 7/8")	545.47.272
200 (7 7/8")	212 (8 3/8")	545.47.274
275 (10 7/8")	295 (11 5/8")	545.47.275

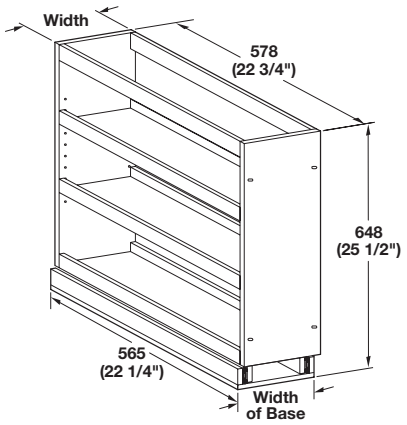

Dimensional data not binding. Dimensions in mm, inches are approximate. We reserve the right to alter specifications without notice.

Base Cabinet Pull-Outs

> For use between cabinets as full height filler
> Use fillers behind posts and turnings
> Mounts between cabinets
> D x H: 603 x 762 mm (23 3/4" x 30")
> Material: Maple and Birch

→ Cabinet Filler Pull-Out

Width	Item No.
76 (3")	545.47.241
151 (6")	545.47.243

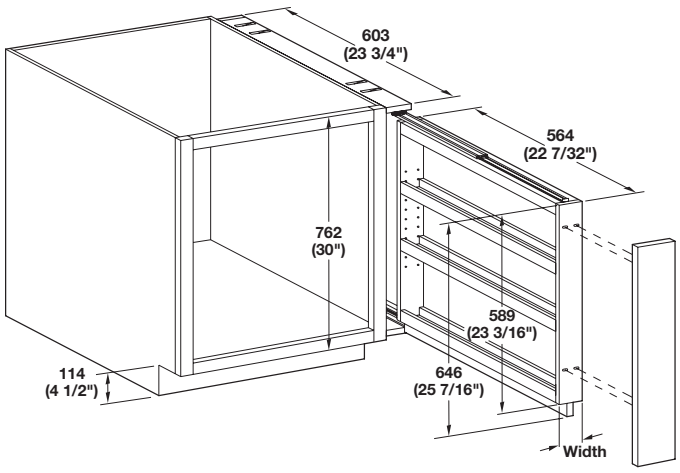

Dimensional data not binding. Dimensions in mm, inches are approximate. We reserve the right to alter specifications without notice.

SmartCab®

soft&silent

→ Base Pull-Out

> Fits into a 305 mm (15") or 381 mm (18") (with a 76 mm (3") Side Caddy) base cabinet with a drawer above the door
> Patent Pending design allows you to configure the storage space to match your needs
> Features 34 kg (75 lb.) Salice Futura undermount soft close slides
> Includes full horizontal shelf, vertical shelf, and half-shelf
> Apps can be ordered separately to drop into the top of the pull-out (App holder tray required – order separately), below
> Can be installed behind a hinged door or with adjustable door mount brackets (supplied)
> Screws to floor of cabinet with 4 screws
> W x D x H: 273 x 562 x 495 mm (10 3/4" x 22 1/8" x 19 1/2")
> Material: Birch Plywood / North American Maple Solids

	Item No.
	546.31.801

→ Side Caddy

> Mounts to side of SmartCab Base Pull-out with included hardware
> Adds 76 mm (3") to the width of the unit
> A convenient way to store your baking sheets
> W x D x H: 76 x 562 x 483 mm (3" x 22 1/8" x 19")
> Material: Birch / North American Maple

	Item No.
	546.32.811

Supplied With
Mounting hardware

→ Full Size App Holder / Storage Tray, required

> Drops into the top of the SmartCab Base Pull-out to expand your storage and organizational options
> Material: Birch

	Item No.
	546.31.863

Dimensional data not binding. Dimensions in mm, inches are approximate. We reserve the right to alter specifications without notice.

SmartCab® Apps

→ Full Size Cutting Board App

> Material: North American Maple

Item No.
546.31.852

→ Knife Block App

> Allows you to store your knives under your cutting board
> Material: North American Maple / Birch

Item No.
546.31.881

→ Roll Manager App

> Keep all your wraps right at your fingertips
> Material: Birch

Item No.
546.32.801

Dimensional data not binding. Dimensions in mm, inches are approximate. We reserve the right to alter specifications without notice.

Wicker Baskets

> For framed or frameless 305 mm (15") or 381 mm (18") cabinets
> Install in or between two cabinets
> Baskets are woven over solid beech frames which slide on runners (sold separately)
> For installation, calculate frame width less 6 mm (1/4") for ease of use of runners

Note
Custom sizes available with minimum order of 200 pcs.

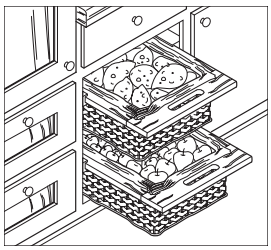

For 305 mm (15") framed cabinets:
Basket 540.55.001; Runner 540.55.992

For 381 mm (18") framed cabinets:
Basket 540.55.002; Runner 540.55.992

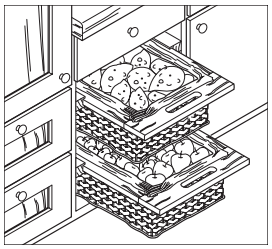

For 305 mm (15") frameless cabinets:
Basket 540.55.001; Runner 540.55.991

For 381 mm (18") frameless cabinets:
Basket 540.55.002; Runner 540.55.991

→ Baskets

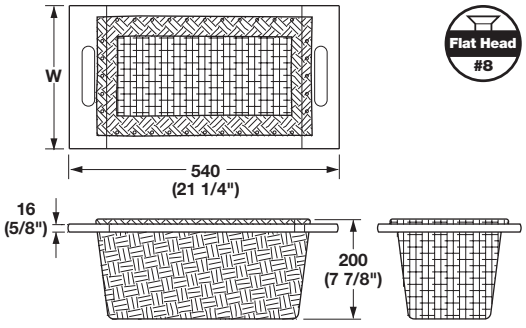

> With beech frame
> Two handles drilled into frame
> D x H: 540 x 200 mm (21 1/4" x 7 7/8")
> Material: Basket: Wicker, natural, dipped; Frame: Beech, lacquered

Width	Item No.
287 (11 5/16")	540.55.001
363 (14 5/16")	540.55.002

→ Runners

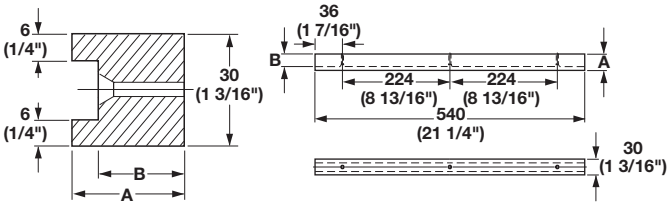

> For wicker baskets
> Material: Beech, lacquered

A	B	Item No.
34 (1 3/8")	25 (1")	540.55.991
40 (1 5/8")	31 (1 1/4")	540.55.992

Flat head screws pages 12.7–12.8, 12.10, 12.13

Dimensional data not binding. Dimensions in mm, inches are approximate. We reserve the right to alter specifications without notice.

Wicker Baskets

> Free standing
> Material: Wicker; Color: natural brown

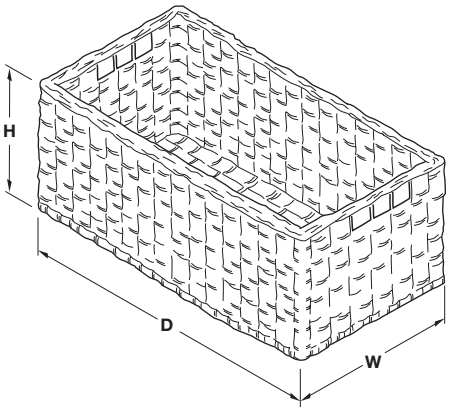

→ Baskets

W × D × H	Item No.
286 × 540 × 200 (11 1/4" × 21 1/4" × 7 3/4")	540.57.081
363 × 540 × 200 (14 1/4" × 21 1/4" × 7 3/4")	540.57.082

Dimensional data not binding. Dimensions in mm, inches are approximate. We reserve the right to alter specifications without notice.

Fineline™ Kitchenware and Plate Organizer

> Your choice of natural walnut, birch, white oak or black ash
> Easily trimmed to fit most drawers
> Base plate may be used as drawer bottom
> A large variety of accessories to choose from for increased storage and functionality
> Beautiful mix of natural wood, stainless steel and aluminum
> Elegantly tapered dividers for a distinguished “Fineline” look
> Material: MDF veneer

→ Base Plate Kit

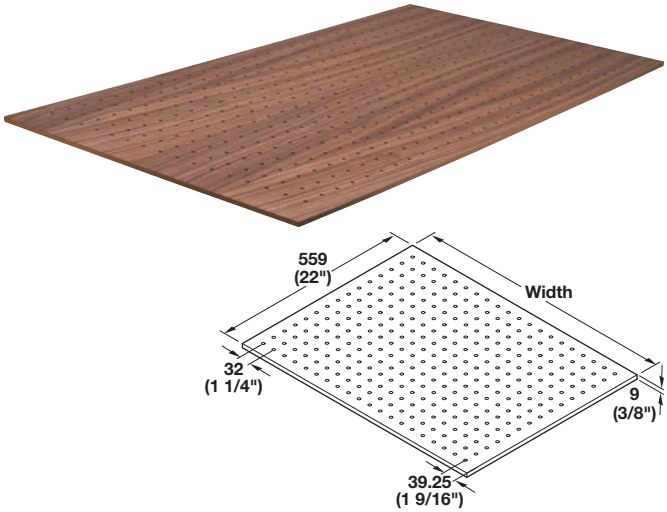

> Width: 864 mm (34")

Finish	Item No.
walnut	557.47.702
birch	557.47.801
black ash	554.47.301

Supplied With
12 Round posts
12 Locking nuts
12 Push in pins

→ Base Plate

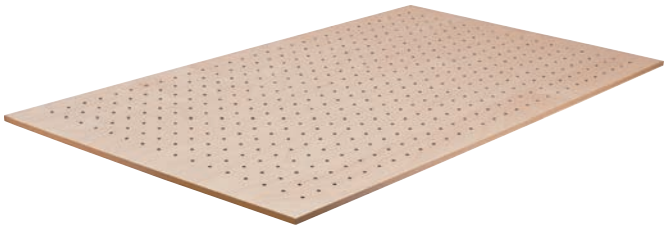

Finish	Width	Item No.
walnut	559 (22")	556.87.641
	864 (34")	557.47.710
	1016 (40")	556.87.640
birch	559 (22")	556.87.941
	864 (34")	557.47.810
	1016 (40")	556.87.940
white oak	1016 (40")	556.87.440
black ash	559 (22")	556.87.341
	864 (34")	554.47.310
	1016 (40")	556.87.340

Supplied With
4 Bumpers

Dimensional data not binding. Dimensions in mm, inches are approximate. We reserve the right to alter specifications without notice.

Fineline™ Kitchenware and Plate Organizer

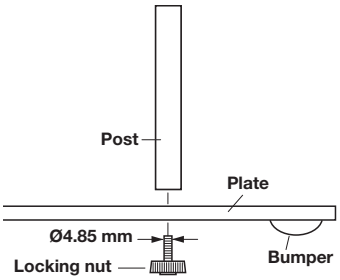

→ Anti-Slip Bumper

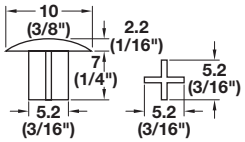

> For 5 mm (3/16") holes of pegboard
> Material: Rubber

Color	Item No.
black	556.87.397

Supplied With
1 Bag (25 pcs.)

→ Bumper

> Self-adhesive backing
> D x H: 18 x 10 mm (11/16" x 7/16")
> Material: Polyurethane

Color	Item No.
black	356.25.330

→ Triangle Post

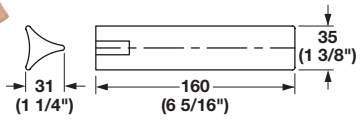

> Push or screw in

Material	Item No.
Walnut	556.87.692
Birch	556.87.992
White Oak	556.87.490
Black Ash	556.87.390

Supplied With
4 Posts
4 Locking nuts
4 Push in pins

→ Round Post

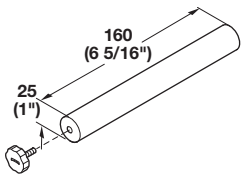

> Push or screw in

Material	Item No.
Walnut	557.47.692
Birch	557.47.892
White Oak	557.47.490
Black Ash	554.47.390

Supplied With
4 Posts
4 Locking nuts
4 Push in pins

Dimensional data not binding. Dimensions in mm, inches are approximate. We reserve the right to alter specifications without notice.

Fineline™ Accessories

→ Container Holder

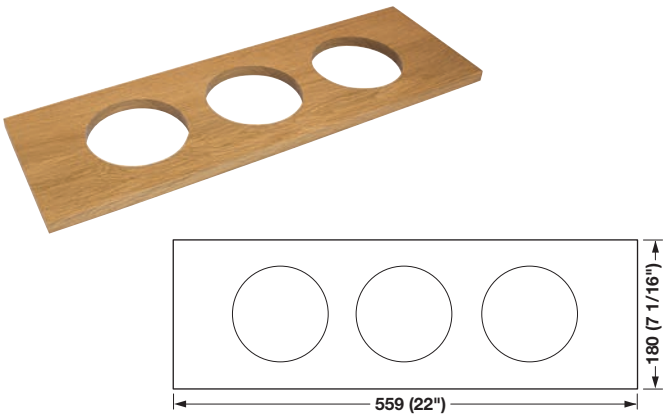

> Depth: 16 mm (5/8")

Material	Item No.
Walnut	557.47.740
Birch	557.47.840
White Oak	557.47.440
Black Ash	554.47.340

→ Plate Rack

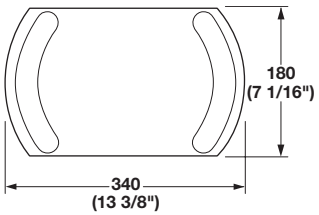

> W x D x H: 340 x 180 x 180 mm (13 3/8" x 7 1/16" x 7 1/16")
> Material: Handle: Stainless Steel

Material	Item No.
Walnut	557.47.780
Birch	557.47.880
White Oak	557.47.480
Black Ash	554.47.380

→ Container

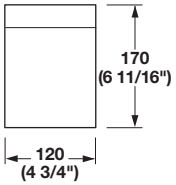

> Capacity: 1.76 quarts
> Material: Glass; Lid: Stainless Steel

	Item No.
	557.47.150

→ Cabinet Shelf Protector

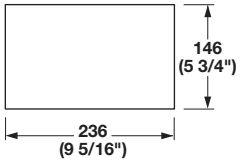

> Set your oil bottles on to eliminate cabinet stains
> Store your salt and pepper grinders here to keep your shelf clean
> Height: 15 mm (9/16")
> Material: Stainless Steel

	Item No.
	557.47.130

Dimensional data not binding. Dimensions in mm, inches are approximate. We reserve the right to alter specifications without notice.

Fineline™ Accessories

→ Plate Rack

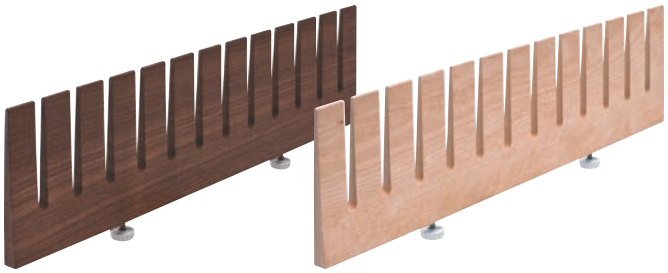

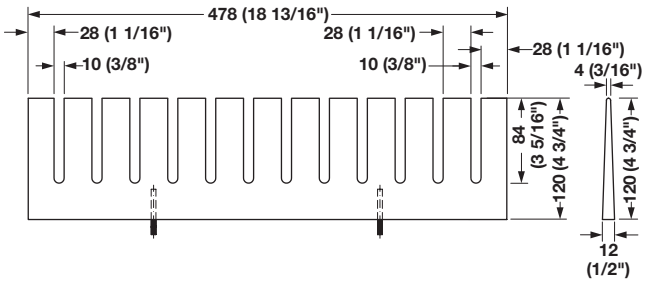

Material	Item No.
Walnut	556.87.650
Birch	556.87.950
White Oak	556.87.450
Black Ash	556.87.350

→ Dividers

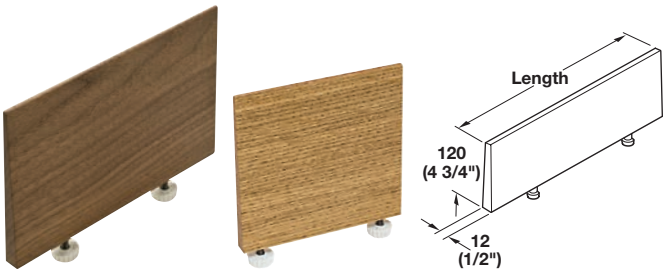

Material	Length	Item No.
Walnut	126 (4 15/16")	556.49.750
	190 (7 1/2")	556.49.751
	478 (18 13/16")	556.49.752
Birch	126 (4 15/16")	556.49.850
	190 (7 1/2")	556.49.851
	478 (18 13/16")	556.49.852
White Oak	126 (4 15/16")	556.49.450
	190 (7 1/2")	556.49.451
	478 (18 13/16")	556.49.452
Black Ash	126 (4 15/16")	556.49.350
	190 (7 1/2")	556.49.351
	478 (18 13/16")	556.49.352

→ Wine Storage Rack

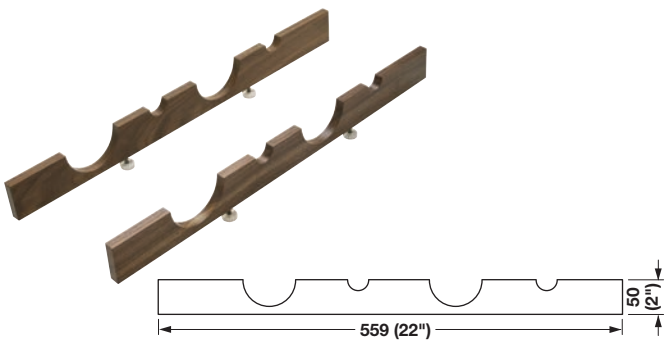

> Depth: 12 mm (1/2")

Material	Item No.
Walnut	557.47.720
Birch	557.47.820
White Oak	557.47.420
Black Ash	554.47.320

Dimensional data not binding. Dimensions in mm, inches are approximate. We reserve the right to alter specifications without notice.

Fineline™

> Your choice of natural walnut, birch, white oak or black ash
> Easily trimmed to fit most drawers
> A large variety of accessories to choose from for increased storage and functionality
> Beautiful mix of natural wood, stainless steel and aluminum
> Elegantly tapered dividers for a distinguished “Fineline" look

Note
For outside cabinet widths of 762 mm (30") and 914 mm (36"), see next page.

→ Cutlery Tray

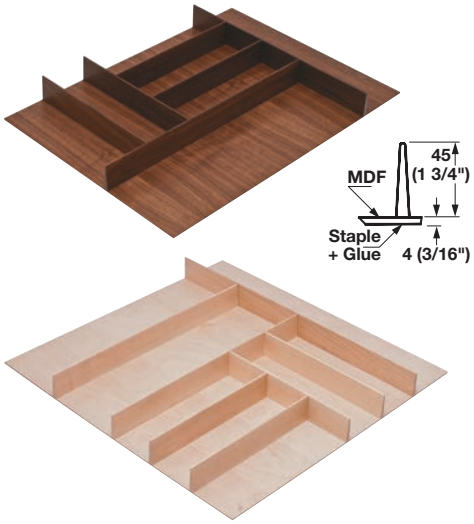

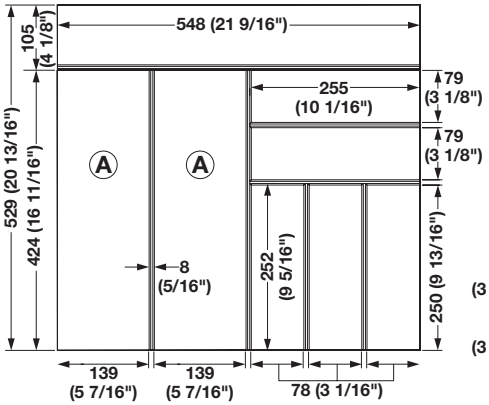

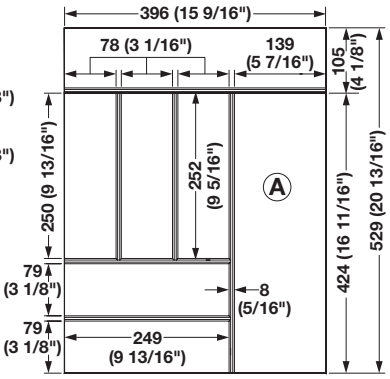

> Minimum inside drawer depth: 424 mm (16 11/16")
> Maximum inside drawer depth: 530 mm (20 7/8")
> Minimum trim width: 257 mm (10 1/8")
> Material: MDF Veneer; Dividers: solid wood

Finish	For outside cabinet width	Actual Width	Item No.
walnut	457 (18")	396 (15 9/16")	556.87.601
	610 (24")	548 (21 9/16")	556.87.602
birch	457 (18")	396 (15 9/16")	556.87.901
	610 (24")	548 (21 9/16")	556.87.902
white oak	457 (18")	396 (15 9/16")	556.87.411
	610 (24")	548 (21 9/16")	556.87.402
black ash	457 (18")	396 (15 9/16")	556.87.301
	610 (24")	548 (21 9/16")	556.87.302

Supplied with
Cutlery tray, Depth extension spacer; white oak is not supplied with depth extension spacer

→ Depth Extension Spacer, optional

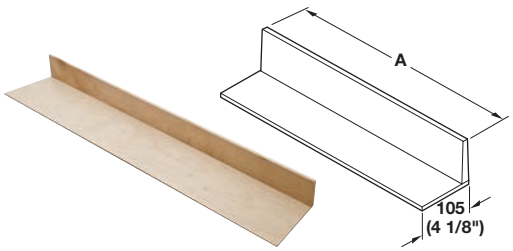

> Material: MDF Veneer; Dividers: solid wood

Finish	Actual Width	Item No.
walnut	600 (23 5/8")	556.91.622
	1200 (47 1/4")	556.91.623
birch	600 (23 5/8")	556.91.922
	1200 (47 1/4")	556.91.923
white oak	600 (23 5/8")	556.91.422
	1200 (47 1/4")	556.91.423
black ash	600 (23 5/8")	556.91.122
	1200 (47 1/4")	556.91.123

Note
One Depth Extension Spacer is included with each Cutlery Tray; these are only needed when Width Extension Spacers are used.

→ Width Extension Spacer, optional

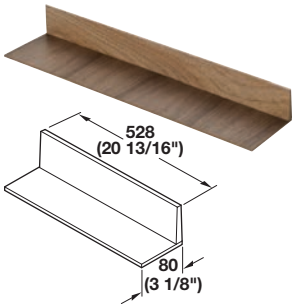

Material	Item No.
Walnut	556.91.611
Birch	556.91.911
White oak	556.91.411
Black ash	556.91.111

Dimensional data not binding. Dimensions in mm, inches are approximate. We reserve the right to alter specifications without notice.

Fineline™

Note
For outside cabinet widths of 457 mm (18") and 610 mm (24") and width and depth spacers, see previous page.

→ Cutlery Tray

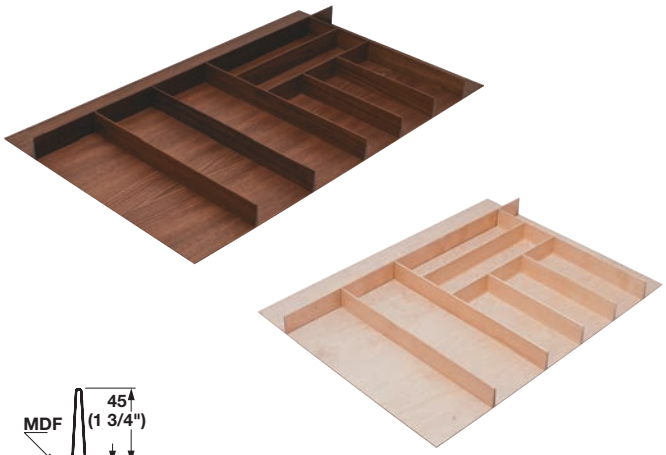

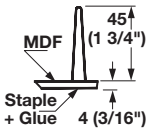

> Minimum inside drawer depth: 424 mm (16 11/16")
> Maximum inside drawer depth: 530 mm (20 7/8")
> Minimum trim width: 340 mm (13 3/8")
> Material: MDF Veneer; Dividers: solid wood

Finish	For outside cabinet width	Actual width	Item No.
walnut	762 (30")	702 (27 5/8")	556.87.603
	914 (36")	853 (33 9/16")	556.87.604
birch	762 (30")	702 (27 5/8")	556.87.903
	914 (36")	853 (33 9/16")	556.87.904
white oak	762 (30")	702 (27 5/8")	556.87.403
	914 (36")	853 (33 9/16")	556.87.404
black ash	762 (30")	702 (27 5/8")	556.87.303
	914 (36")	853 (33 9/16")	556.87.304

Supplied with
Cutlery tray, Depth extension spacer; white oak is not supplied with depth extension spacer

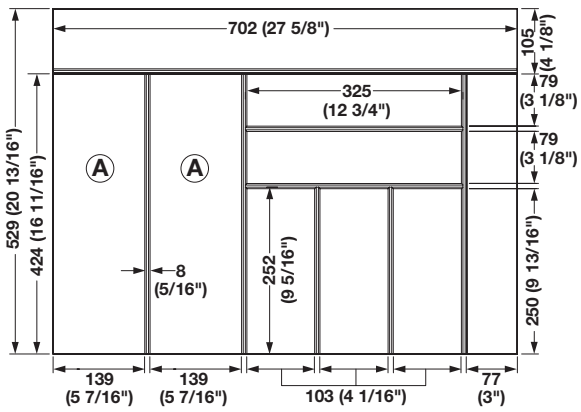

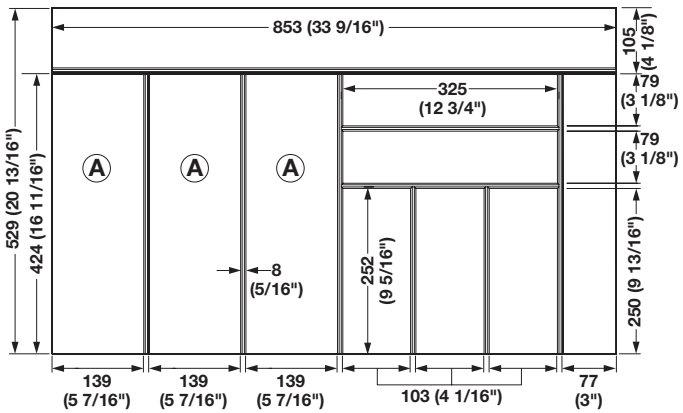

→ Helpful Design Information

	Face Frame Cabinet Construction (1 1/2" Stiles)		Frameless Cabinet Construction (3/4" (19 mm) material)	
Width	Drawer Box Thickness 5/8" (16 mm)	Drawer Box Thickness 3/4" (19 mm)	Drawer Box Thickness 5/8" (16 mm)	Drawer Box Thickness 3/4" (19 mm)
	Outside Cabinet Width - 4 5/8" (117 mm) = Interior Drawer Width	Outside Cabinet Width - 4 7/8" (124 mm) = Interior Drawer Width	Outside Cabinet Width - 2 7/8" (73 mm) = Interior Drawer Width	Outside Cabinet Width - 3 1/8" (80 mm) = Interior Drawer Width
Depth	Wood Drawer with 21" slides and 5/8" material = 19 3/4" (502 mm) Interior Drawer Depth		Matrix Drawer with 550 mm (22") slides = 530 mm (20 7/8") Interior Drawer Depth	
	Wood Drawer with 21" slides and 3/4" material = 19 1/2" (495 mm) Interior Drawer Depth			

Dimensional data not binding. Dimensions in mm, inches are approximate. We reserve the right to alter specifications without notice.

Fineline™

> Great for storage of larger utensils, foils, kitchen tools, etc.
> Inserts and accessories from page **3.103** can be used
> Allows you to organize all the top drawers in your kitchen – not just your cutlery drawer
> Can be trimmed for width and depth for a custom fit

Note
One depth extension is included with each Insert.
See page **3.100** if additional spacers are needed.

→ Multipurpose Insert 457 mm (18")

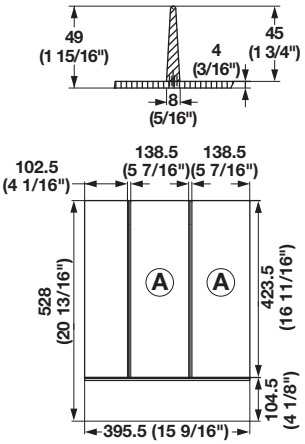

Material	Item No.
Walnut	556.87.621
Birch	556.87.921
Black Ash	556.87.321

→ Multipurpose Insert 610 mm (24")

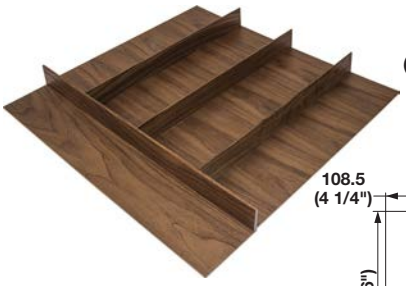

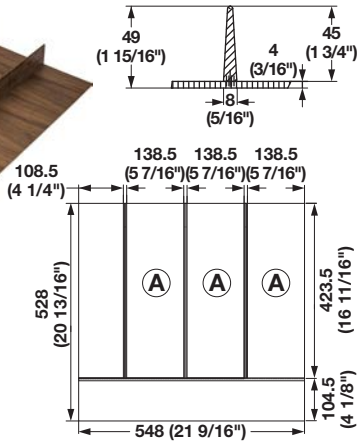

Material	Item No.
Walnut	556.87.622
Birch	556.87.922
Black Ash	556.87.322

→ Multipurpose Insert 762 mm (30")

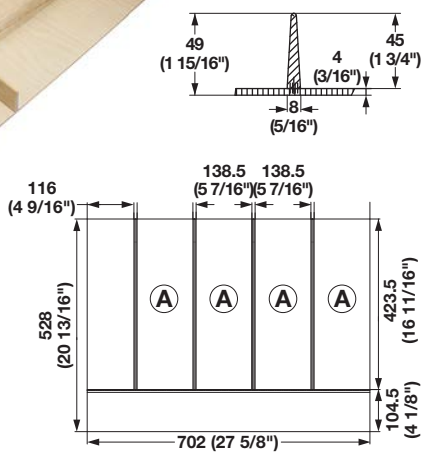

Material	Item No.
Walnut	556.87.623
Birch	556.87.923
Black Ash	556.87.323

→ Multipurpose Insert 916 mm (36")

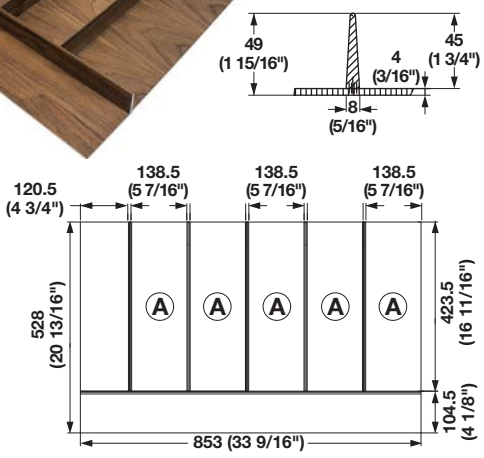

Material	Item No.
Walnut	556.87.624
Birch	556.87.924
Black Ash	556.87.324

Dimensional data not binding. Dimensions in mm, inches are approximate. We reserve the right to alter specifications without notice.

Fineline™ Accessories

→ A - Cross Divider

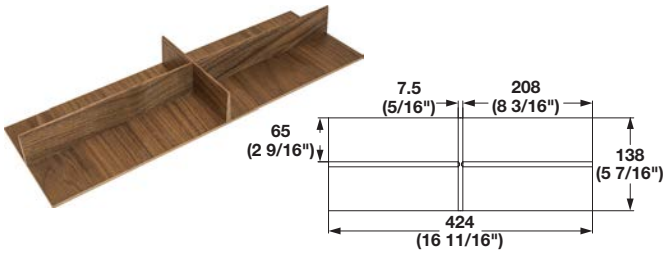

Material	Item No.
Walnut	556.87.699
Birch	556.87.999
Black Ash	556.87.398

→ A - Knife Block

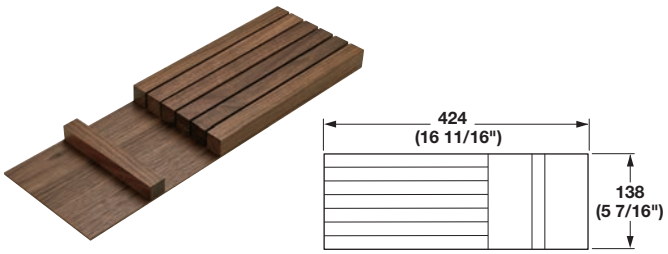

Material	Item No.
Walnut	556.91.640
Birch	556.91.940
White Oak	556.91.440
Black Ash	556.91.140

→ A - Roll Holder

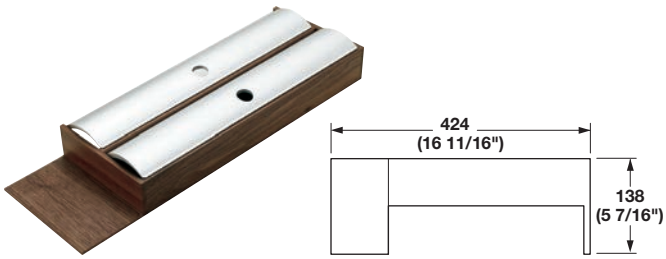

> Material: Roll cover: Aluminum anodized

Material	Item No.
Walnut	556.91.650
Birch	556.91.950
White Oak	556.91.450
Black Ash	556.91.150

→ A - Stepped Container Holder

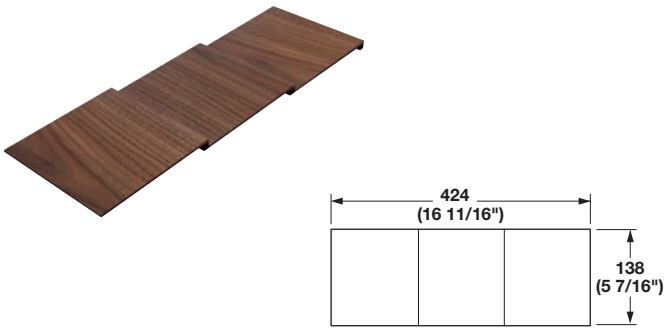

Material	Item No.
Walnut	556.91.680
Birch	556.91.980
White Oak	556.91.480
Black Ash	556.91.180

→ A - Container Holder

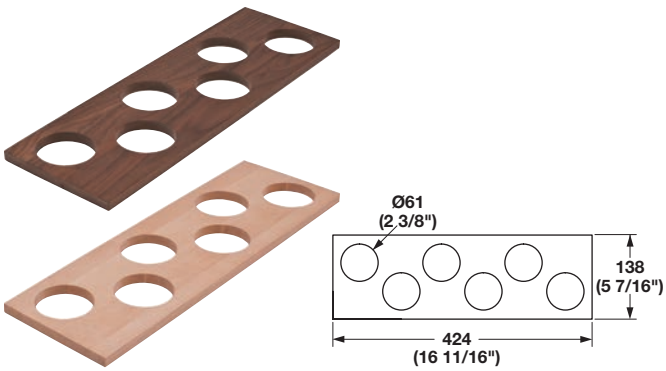

Material	Item No.
Walnut	556.87.660
Birch	556.87.960
White Oak	556.87.460
Black Ash	556.87.360

→ A - Containers

> Stainless steel set has lids for dispensing spices
> Containers fit into the container holder
> Ø × H: Ø60 × 60 mm (Ø2 3/8" × 2 3/8")
> Material: Stainless Steel

	Item No.
	556.92.031

Supplied With
6 pcs.

Dimensional data not binding. Dimensions in mm, inches are approximate. We reserve the right to alter specifications without notice.

Fineline™ Accessories

Note
One depth extension is included with each Insert.
See page **3.100** if additional spacers are needed.

→ Knife Insert

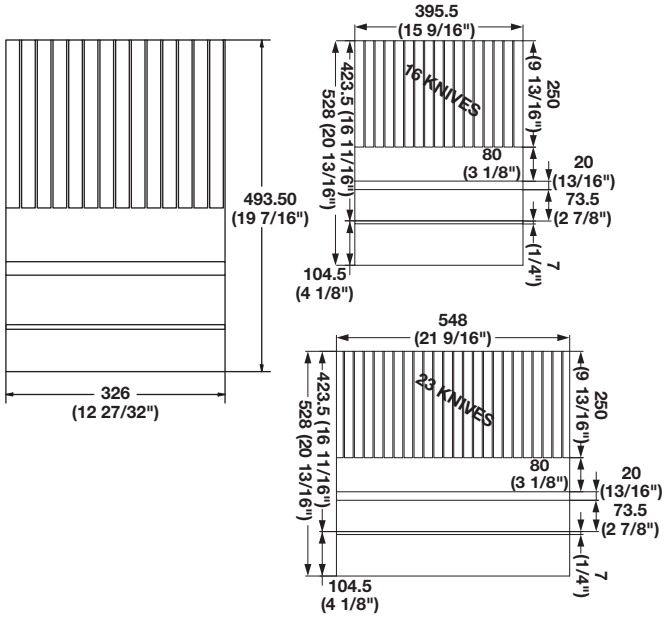

> Organize all your knives in one drawer
> Quick, safe, visible, and easy to access
> Can be trimmed for width and depth for a custom fit

Material	305 mm (12")	457 mm (18")	610 mm (24")
Walnut	–	556.87.681	556.87.682
Birch	556.87.983	556.87.981	556.87.982
Black Ash	–	556.87.381	556.87.382

→ Stepped Spice Holder

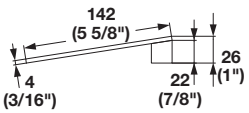

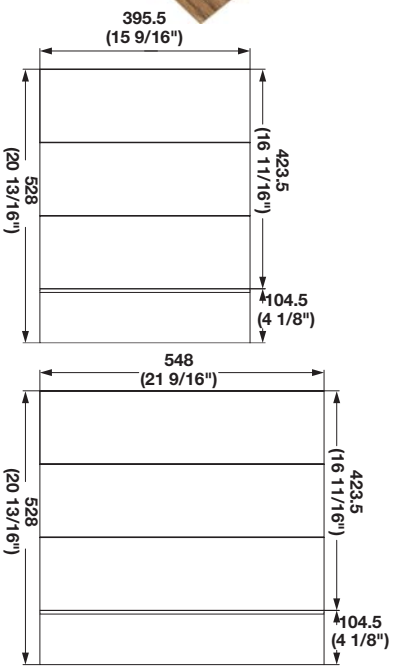

> Visible and easy to access spices
> Can be trimmed for width and depth for a custom fit

Material	457 mm (18")	610 mm (24")
Walnut	556.87.671	556.87.672
Birch	556.87.971	556.87.972
Black Ash	556.87.371	556.87.372

Dimensional data not binding. Dimensions in mm, inches are approximate. We reserve the right to alter specifications without notice.

Fineline™ Move

> Fineline Move allows you to configure your own personal drawer organization
> A special system of boxes in different sizes, allows for individualized organization of drawers
> Compartments in various sizes can be arranged by effortless horizontal movement of the boxes
> Mats on the drawer bottom create an interesting surface for spaces between the boxes if desired, see page **3.118**

Below are some example layouts of how you can use the Fineline Move kitchen products.

→ Cutlery Drawer 1

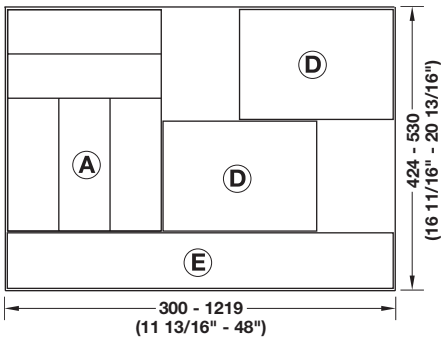

→ Cutlery Drawer 2

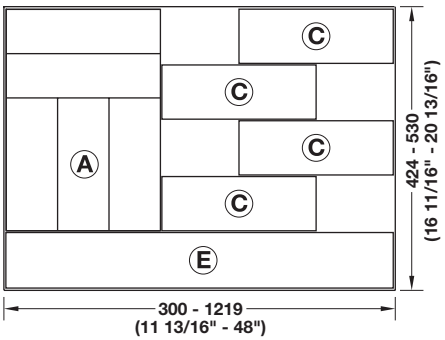

→ Cutlery Drawer 3

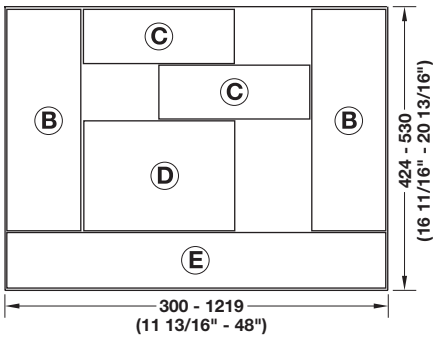

→ Deep Storage Drawer 1

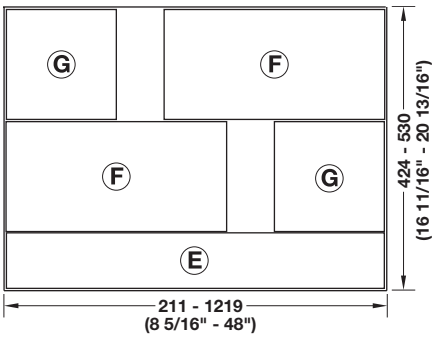

Dimensional data not binding. Dimensions in mm, inches are approximate. We reserve the right to alter specifications without notice.

Fineline™ Move

> Configure your own personal drawer organization with boxes in different sizes
> Compartments can be arranged in a variety of sizes by stepless horizontal movement
> Non-slip mats on the cabinet bottom allow for empty spaces within the drawer, see page **3.118**
> The Fineline Move is elegant but also very strong; the dividers taper down to a wider base where they are glued and stapled in place resulting in beautiful and durable joinery

→ A - Cutlery Insert

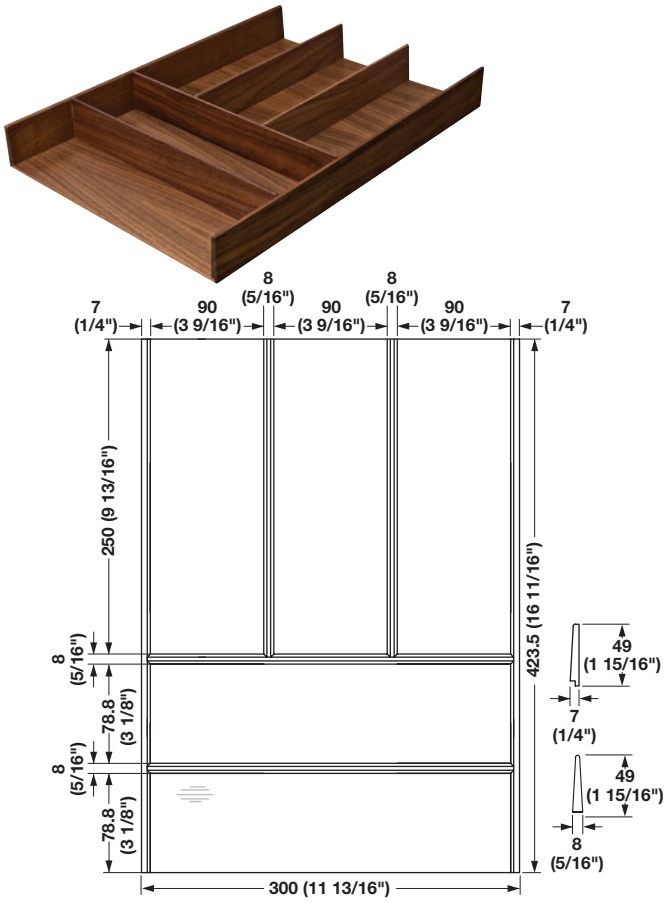

> W x D x H: 300 x 424 x 49 mm (11 13/16" x 16 11/16" x 1 15/16")

Material	Item No.
Walnut	556.88.700
Birch	556.88.200
Black Ash	556.88.300

→ B - Multipurpose Insert

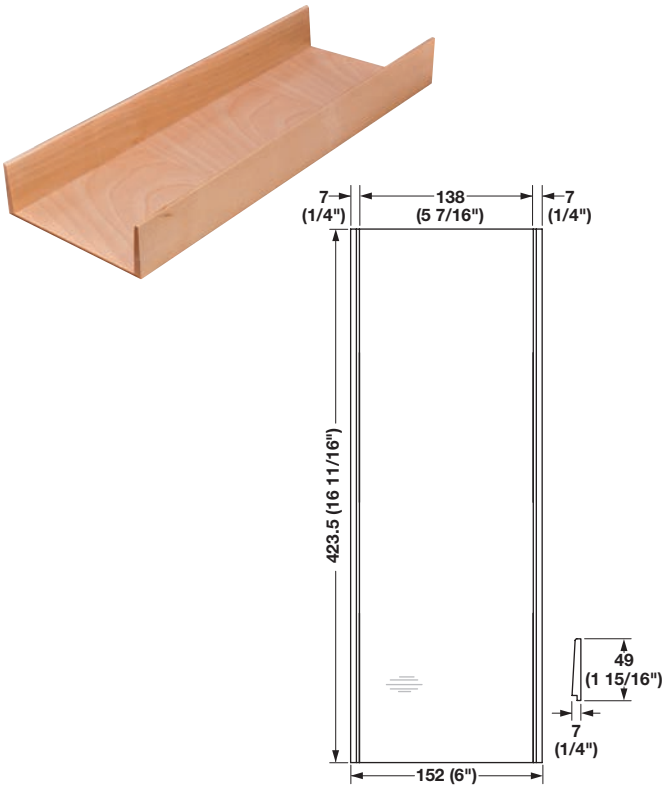

> Use for large utensils or to hold an accessory such as a knife block, spice storage or a roll holder
> W x D x H: 152 x 424 x 49 mm (6" x 16 11/16" x 1 15/16")

Material	Item No.
Walnut	556.88.710
Birch	556.88.210
Black Ash	556.88.310

Note
Fineline accessories from page **3.103** can be used with Multipurpose Insert.

Dimensional data not binding. Dimensions in mm, inches are approximate. We reserve the right to alter specifications without notice.

Fineline™ Move

→ C - Cutlery Box 1

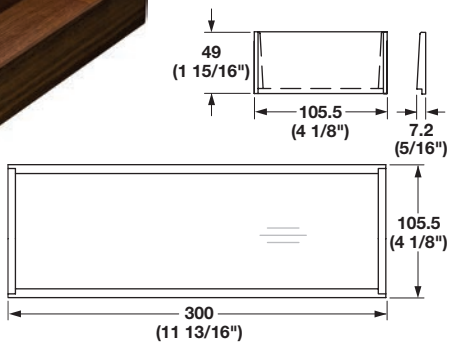

> Can be used with a cutlery insert, multipurpose insert or the Cutlery Box 2
> W x D x H: 105.5 x 300 x 49 mm (4 1/8" x 11 13/16" x 1 15/16")

Material	Item No.
Walnut	556.88.720
Birch	556.88.220
Black Ash	556.88.320

Note
A typical 533 mm (21") deep drawer will use 4 pieces of Cutlery Box 1.

→ E - Depth Extension Spacer

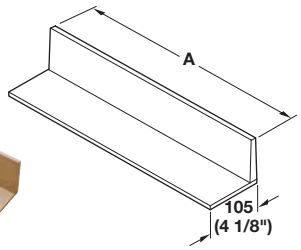

> Material: MDF Veneer; Dividers: solid wood

Finish	(A) Actual width	Item No.
walnut	600 (23 5/8")	556.91.622
	1200 (47 1/4")	556.91.623
birch	600 (23 5/8")	556.91.922
	1200 (47 1/4")	556.91.923
black ash	600 (23 5/8")	556.91.122
	1200 (47 1/4")	556.91.123

→ D - Cutlery Box 2

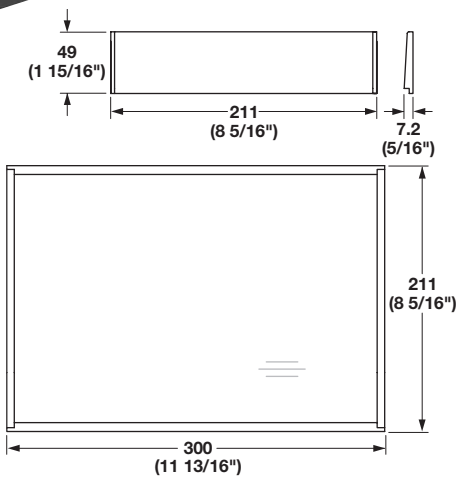

> Can be used with a cutlery insert, multipurpose insert or the Cutlery Box 1
> W x D x H: 211 x 300 x 49 mm (8 5/16" x 11 13/16" x 1 15/16")

Material	Item No.
Walnut	556.88.721
Birch	556.88.221
Black Ash	556.88.321

Note
A typical 533 mm (21") deep drawer will use 2 pieces of Cutlery Box 2.

→ Clip for Fineline Move

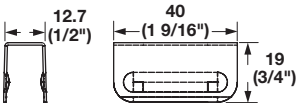

> Designed to hold Fineline Move in place within the drawer
> Adds a beautiful design element to the finish
> Material: 304 Stainless Steel, brushed

	Item No.
	556.88.096

Dimensional data not binding. Dimensions in mm, inches are approximate. We reserve the right to alter specifications without notice.

Fineline™ Move

> Configure your own personal drawer organization with boxes in different sizes
> Compartments can be arranged in a variety of sizes by stepless horizontal movement
> Non-slip mats on the cabinet bottom allow for empty spaces within the drawer, see page **3.118**
> The dividers taper down to a wider base where they are glued and stapled in place resulting in beautiful and durable joinery
> Used for organization and storage in deep drawers
> Handles on the box allow for easy removal as needed

→ F - Kitchen Storage Box 1

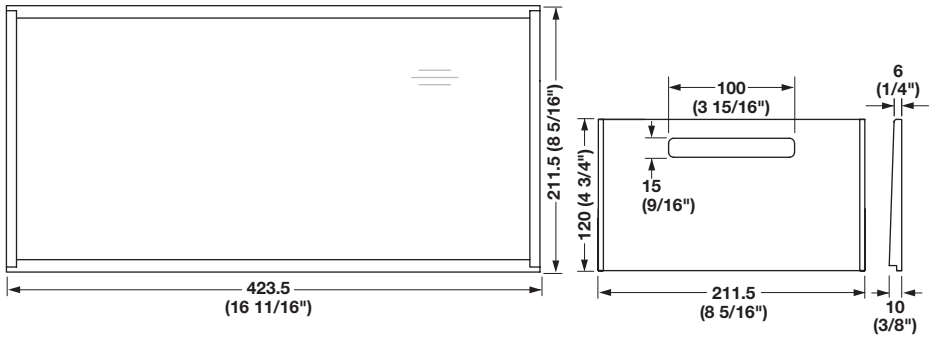

> Use with Storage Box 2 for the optimal storage solution
> W x D x H: 211.5 x 423.5 x 120 mm (8 5/16" x 16 11/16" x 4 3/4")

Material	Item No.
Walnut	556.88.730
Birch	556.88.230
Black Ash	556.88.330

→ G - Kitchen Storage Box 2

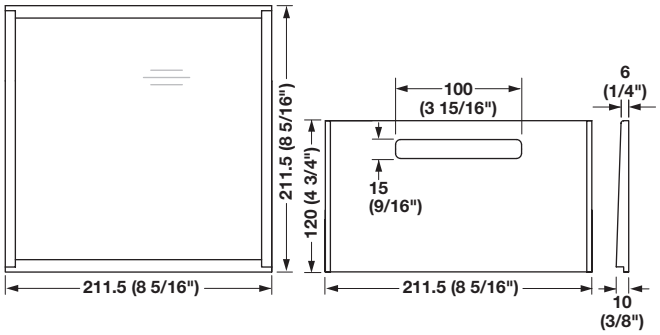

> Use with Storage Box 1 for the optimal storage solution
> W x D x H: 211.5 x 211.5 x 120 mm (8 5/16" x 8 5/16" x 4 3/4")

Material	Item No.
Walnut	556.88.731
Birch	556.88.231
Black Ash	556.88.331

Dimensional data not binding. Dimensions in mm, inches are approximate. We reserve the right to alter specifications without notice.

Drawer Inserts

→ Double Cutlery Drawer

> Squeeze to release inner drawer
> Designed to store all your silverware in one drawer
> Comes completely assembled and ready to install
> Prepped for Häfele, Blum or Salice Undermount slides, must order separately
> Finished solid maple silverware dividers installed on both upper and lower drawer box
> Drawer opening: min. 127 mm (5")
> D × H: 533 × 106 mm (21" × 4 3/16")
> Material: Sides: Prefinished 1/2" Maple
Bottom: Prefinished 1/4" Birch

Cabinet size	Width	Item No.
381 (15")	292 (11 1/2")	556.48.800
457 (18")	368 (14 1/2")	556.48.801
533 (21")	445 (17 1/2")	556.48.802
610 (24")	521 (20 1/2")	556.48.803

Note
Drawer front is customer supplied.

→ Cutlery Tray

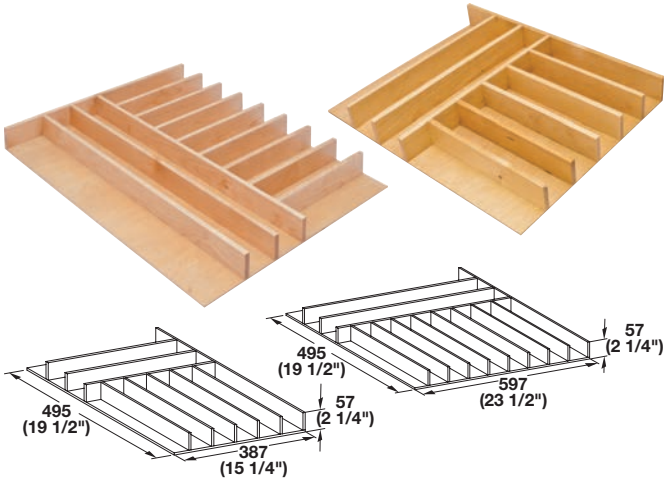

> Cutlery section width: 70 mm (2 3/4")
> Can be cut-to-size
> Trim depth: min. 362 mm (14 1/4")
> Material: Birch with durable clear UV coating

Width	Item No.
387 (15 1/4")	556.99.104
597 (23 1/2")	556.99.107

→ Spice Tray

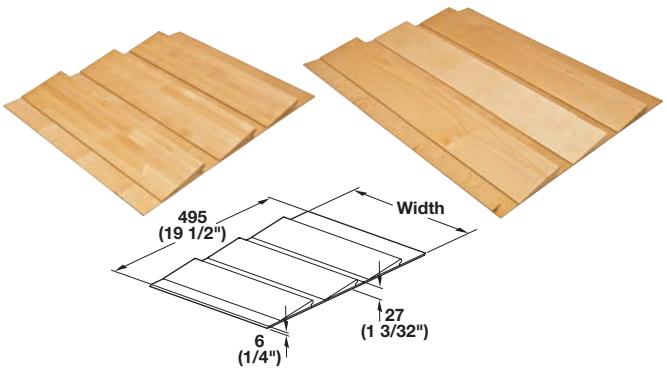

> Designed for spice containers of any size
> Can be cut-to-size
> Material: Birch with durable clear UV coating

Width	Item No.
387 (15 1/4")	556.99.114
597 (23 1/2")	556.99.117

Dimensional data not binding. Dimensions in mm, inches are approximate. We reserve the right to alter specifications without notice.

Sky Cutlery Trays

> Designed with an optional divider for customization of the insert
> Can be trimmed to fit drawer
> Compartments are flared at the bottom for easier cleaning
> Material thickness: 2.5 mm (3/32")
> Tray height: 53 mm (2 1/16")
> Material: Polystyrene

→ Tray for 533 mm (21") Deep Drawer

> Trimmable depth A–D: 470–520 mm (18 1/2"–20 1/2")
> Trimmable depth E–I: 470–510 mm (18 1/2"–20 1/16")

Size	Cabinet width (Face Frame)	Cabinet width (Frameless)	Trimmable width	slate gray	textured white
A	381 (15")	381 (15")	260–300 (10 1/4"–11 13/16")	556.55.361	556.55.761
B	450 (18")	–	310–350 (12 3/16"–13 3/4")	556.55.362	556.55.762
C	533 (21")	450 (18")	360–400 (14 3/16"–15 3/4")	556.55.363	556.55.763
D	–	533 (21")	410–450 (16 1/8"–17 11/16")	556.55.364	556.55.764
E	600 (24")	–	460–500 (18 1/8"–19 11/16")	556.55.365	556.55.765
F	686 (27")	600 (24")	510–580 (20 1/16"–22 13/16")	556.55.366	556.55.766
G	–	900 (36")	810–850 (31 7/8"–33 7/16")	556.55.369	556.55.769
H	1067 (42")	1067 (42")	910–950 (35 13/16"–37 3/8")	556.55.370	556.55.770
I	–	1219 (48")	1110–1150 (43 11/16"–45 1/4")	556.55.372	556.55.772

→ Tray for 550 mm (21 11/16") Deep Drawer

> Trimmable depth: 520–540 mm (20 1/2"–21 1/4")

Size	Cabinet width (Face Frame)	Cabinet width (Frameless)	Trimmable width	slate gray	textured white
D	533 (21")	450 (18")	360–400 (14 3/16"–15 3/4")	556.55.383	556.55.783
F	686 (27")	600 (24")	510–580 (20 1/16"–22 13/16")	556.55.386	556.55.786
G	–	900 (36")	810–850 (31 7/8"–33 7/16")	556.55.389	556.55.789
H	1067 (42")	1067 (42")	910–950 (35 13/16"–37 3/8")	556.55.390	556.55.790
I	–	1219 (48")	1110–1150 (43 11/16"–45 1/4")	556.55.392	556.55.792

Dimensional data not binding. Dimensions in mm, inches are approximate. We reserve the right to alter specifications without notice.

HÄFELE

Sky Cutlery Trays

> W x D: 170.5 x 40 mm (6 11/16" x 1 5/8")
> Material: Plastic

→ Divider

Color	Item No.
slate gray	556.55.399
textured white	556.55.799

Supplied With
3 pcs.

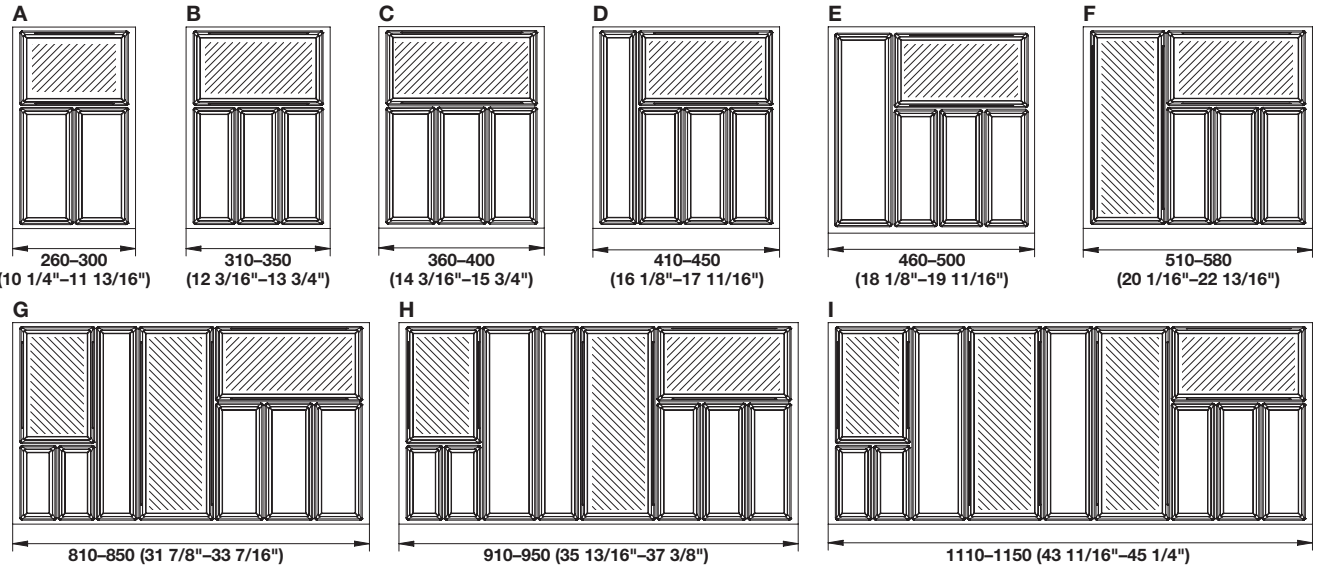

Dimensional data not binding. Dimensions in mm, inches are approximate. We reserve the right to alter specifications without notice.

Cutlery Tray

> Can be trimmed to fit drawer
> For drawer depth: 490–540 mm (19 1/4"–21 1/4")
> For drawer height: 50 mm (2")
> Material thickness: 2.5 mm (3/32")
> Material: Plastic; Color: silver gray textured

Size	Cabinet width (Face Frame)	Width of tray	Item No.
A	381 (15")	200–300 (8"–12")	556.53.510
B	450 (18")	300–400 (12"–16")	556.53.511
C	533 (21")	350–450 (14"–18")	556.53.512
D	600 (24")	400–500 (16"–20")	556.53.513
E	600 (24")	450–550 (18"–22")	556.53.514
F	686 (27")	500–600 (20"–24")	556.53.515
G	762 (30")	600–700 (24"–28")	556.53.516
H	838 (33")	700–800 (28"–32")	556.53.517
I	991 (39")	800–900 (32"–36")	556.53.518
J	1067 (42")	900–1000 (36"–40")	556.53.519

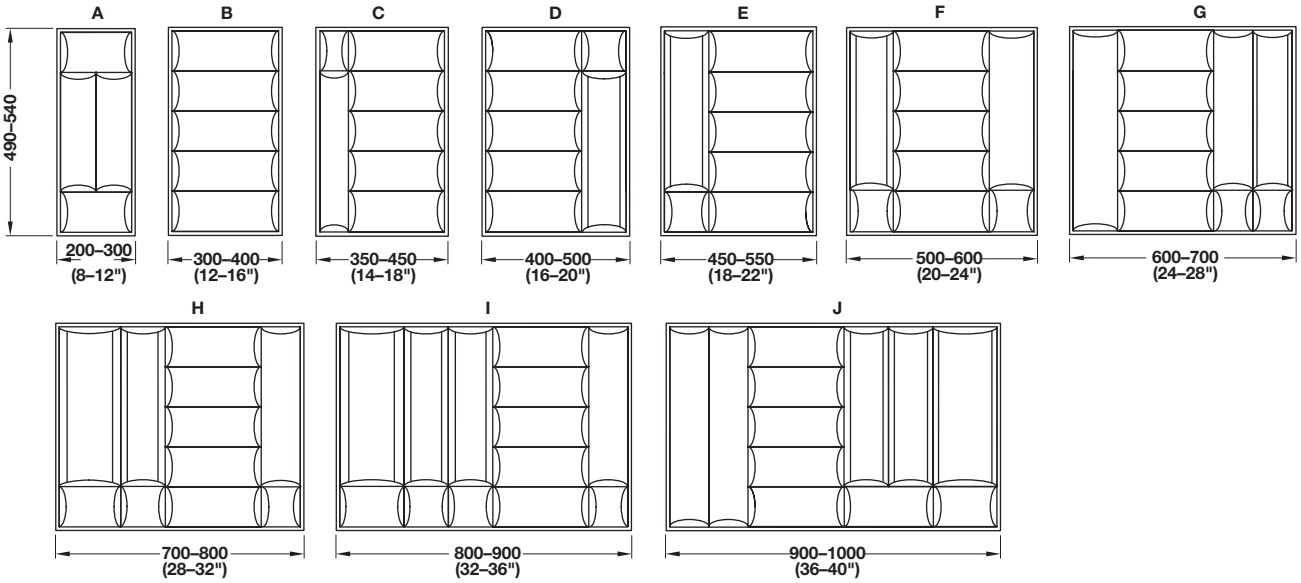

Dimensional data not binding. Dimensions in mm, inches are approximate. We reserve the right to alter specifications without notice.

This page is left blank intentionally.

Dimensional data not binding. Dimensions in mm, inches are approximate. We reserve the right to alter specifications without notice.

Spice Drawer Insert

> Trims to fit drawers: up to 1300 mm (51 1/8")
> For storage of average sized spice jars
> Required drawer height: min. 82 mm (3 1/4")
> Material thickness: 3 mm (1/8")
> W x D: 1300 x 550 mm (51 1/8" x 21 5/8")
> Material: Plastic

→ Spice Tray

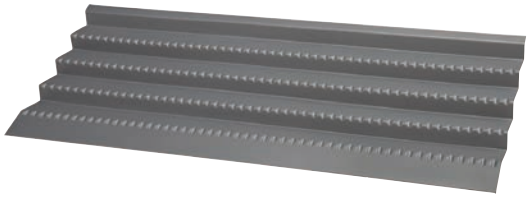

Color	Item No.
maple, matt	556.79.306
silver, textured	556.79.506
white gloss	556.79.706

Dimensional data not binding. Dimensions in mm, inches are approximate. We reserve the right to alter specifications without notice.

Medical Drawer Inserts

> Drawer inserts can be trimmed with a circular saw to the measurements indicated by the broken line
> Material: Polystyrene; Color: white gloss

Note
Fixed dimensions: starting at 100 pcs. at no extra charge.

→ Drawer Insert, flat

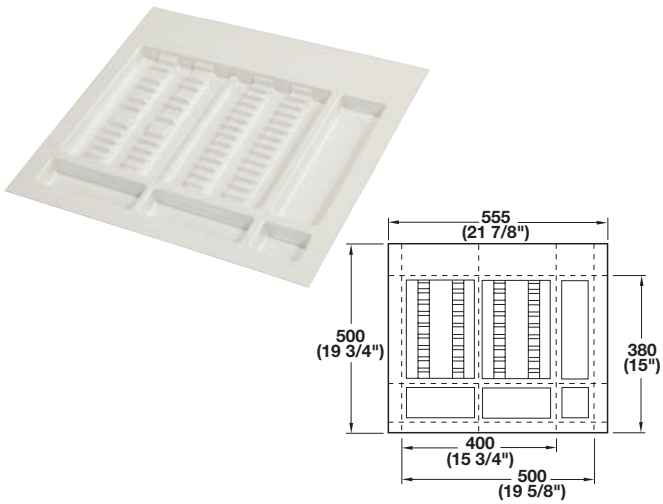

> With partitions for dental mirror, tweezers and other medical instruments
> Height: 28 mm (1 1/8")

	Item No.
	556.66.763

→ Drawer Insert, shallow

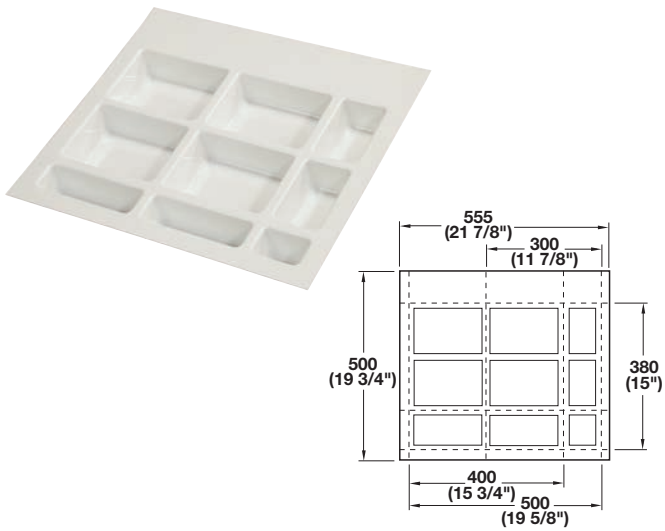

> With partitions for materials and medical instruments
> Height: 28 mm (1 1/8")

	Item No.
	556.66.754

→ Drawer Insert, deep

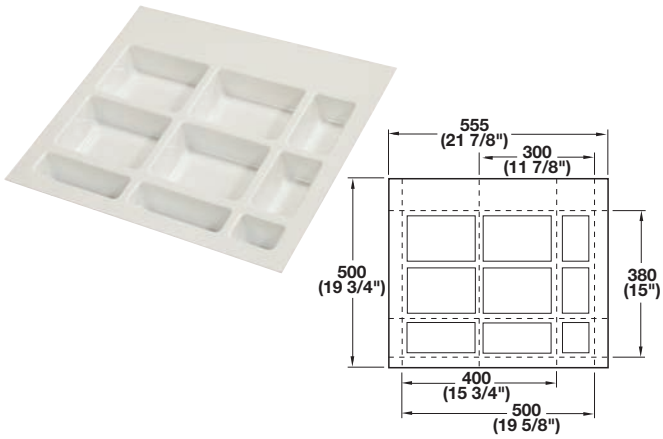

> With partitions for materials and medical instruments
> Height: 57 mm (2 1/8")

	Item No.
	556.66.727

Dimensional data not binding. Dimensions in mm, inches are approximate. We reserve the right to alter specifications without notice.

Drawer Liners

→ Felt Cloth

Green

Brown

Maroon

Black

> Add style and personality to your silverware while preventing tarnish
> For lining the drawer bottom
> Self-adhesive
> W × L: 548 × 914 mm (23" × 36")
> Material: Felt

Color	Item No.
green	891.22.000
brown	891.22.100
maroon	891.22.110
black	891.22.300

→ Flock Non-Slip Mat - Agoform

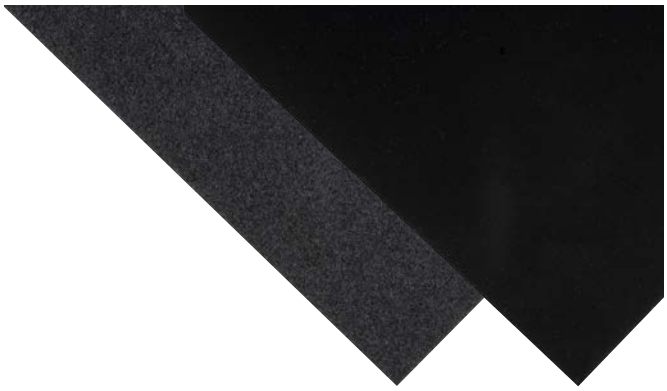

> Luxurious, velvety finish
> Noise-dampening and vibration resistant
> Cut-to-size non-slip mats prevent sliding or movement of items on shelves, drawers, etc.
> W x L: 590 x 1170 mm (23 1/4" x 46 1/16")
> Material: Face: Flock, Back: Polystyrene

Color	Item No.
anthracite gray	547.94.385
black	547.94.485

Note
Sold in sheets.

Dimensional data not binding. Dimensions in mm, inches are approximate. We reserve the right to alter specifications without notice.

This page is left blank intentionally.

Dimensional data not binding. Dimensions in mm, inches are approximate. We reserve the right to alter specifications without notice.

Non-slip Mats

> Cut-to-size non-slip mats prevent sliding or movement of items on shelves, drawers, etc.
> Helps to reduce noise
> Material: Face: Rubber; Back: Polystyrene

Note
Sold in sheets.

→ Weave Non-slip Mat

Black

Umbra Gray (RAL 7022)

White

Translucent

> Weave pattern provides a modern look
> W × L: 600 x 1170 mm (23 5/8" x 46 1/16")

Color	Item No.
black	547.92.336
umbra gray (RAL 7022)	547.92.536
white	547.92.736
translucent	547.93.492

→ Canvas Non-slip Mat

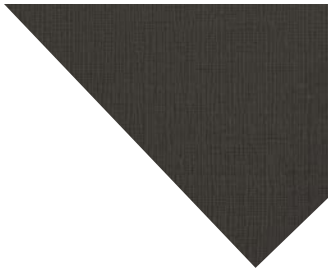

> W × L: 600 x 1170 mm (23 5/8" x 46 1/16")

Color	Item No.
basalt gray	547.94.672

→ Fiber Non-slip Mat

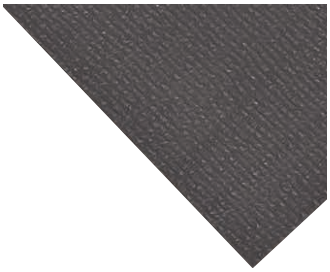

Black

Umbra Gray (RAL 7022)

Quartz Gray (RAL 7039)

> Fiber pattern looks great with wood drawers
> Umbra Gray matches Blum Legrabox "Orion Gray", Grass Vianaro "Graphite Gray" and Matrix "Champagne" and "Gray"
> Length: 1170 mm (46 1/16")

Color	Width	Item No.
black	501 (19 3/4")	547.92.325
black	600 (23 5/8")	547.92.326
umbra gray (RAL 7022)	501 (19 3/4")	547.92.525
umbra gray (RAL 7022)	600 (23 5/8")	547.92.526
quartz gray (RAL 7039)	501 (19 3/4")	547.92.625
quartz gray (RAL 7039)	600 (23 5/8")	547.92.626
quartz gray (RAL 7039)	740 (29 1/8")	547.92.627

→ Sample Chain

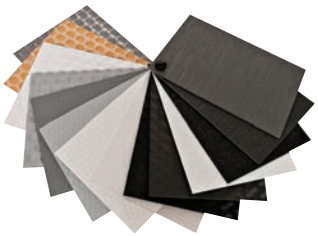

	Item No.
	732.06.790

Supplied With
146 x 105 mm (5 3/4" x 4 1/8") piece of all of our non-slip mat and cabinet protector mat products.

Fineline Move pages 3.105-3.108

Dimensional data not binding. Dimensions in mm, inches are approximate. We reserve the right to alter specifications without notice.

Mats

> Offers slip resistance and noise reduction
> Translucent mat is ideal for glass applications as the surface remains visible
> Material: Synthetic Rubber

Note
Sold in rolls.

Non Slip

→ Studded Non-slip Mats

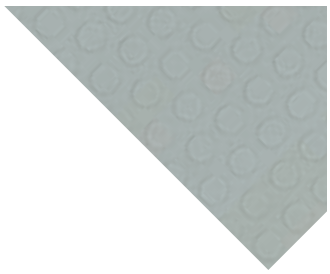

Gray

Silver

White

Translucent

> D × W: 1.5 × 10 m (59" × 32' 9")

Color	Item No.
white	547.90.719
translucent	547.90.412
silver	547.90.919
gray	547.90.509

> W × L: 600 × 1500 mm (23 5/8" × 59")

Color	Item No.
white	547.90.761
translucent	547.90.491
silver	547.90.901
gray	547.90.521

→ Sample Chain

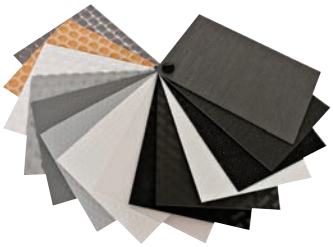

	Item No.
	732.06.790

Supplied With
146 x 105 mm (5 3/4" x 4 1/8") piece of all of our non-slip mat and cabinet protector mat products.

Dimensional data not binding. Dimensions in mm, inches are approximate. We reserve the right to alter specifications without notice.

Smartcube

> Shelf system offering countless possible configurations and design possibilities
> Length: 2500 mm (98 7/16")
> Material: Aluminum

→ Rails

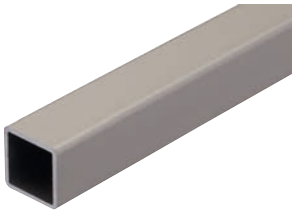

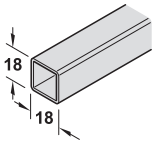

> Without support for vertical strut

Finish	Item No.
stainless steel colored	793.05.014
black	793.05.314

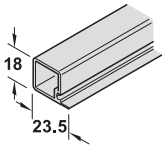

> With support on one side

Finish	Item No.
stainless steel colored	793.05.024
black	793.05.324

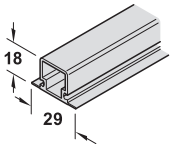

> With support on both sides

Finish	Item No.
stainless steel colored	793.05.034
black	793.05.334

Dimensional data not binding. Dimensions in mm, inches are approximate. We reserve the right to alter specifications without notice.

Smartcube

> Material: Aluminum

→ Connectors

> 3-sided
> For basic shelf system

Finish	Item No.
stainless steel colored	793.05.080
black	793.05.380

> 4-sided
> For multi-level shelf system

Finish	Item No.
stainless steel colored	793.05.082
black	793.05.382

> 4-sided
> For multi-level shelf system

Finish	Item No.
stainless steel colored	793.05.081
black	793.05.381

> 5-sided
> For multi-level shelf system

Finish	Item No.
stainless steel colored	793.05.083
black	793.05.383

→ Gasket

> For noise reduction between shelf and rails
> Length: 200 m (656' 2")
Material: Plastic, transparent

	Item No.
	793.05.995

→ Assembly Hardware

> 4-sided
> For multi-level shelf system

Finish	Item No.
stainless steel colored	793.05.997
black	793.05.996

Supplied With
24 Countersunk head screws, self-tapping, M5 x 15 mm (9/16")
2 Hospa chipboard screws with countersunk head, 5 x 55 mm (3/16" x 2 3/16")
2 Universal wall plugs, UX6 x 50 mm (1 15/16")
2 Cover caps

Dimensional data not binding. Dimensions in mm, inches are approximate. We reserve the right to alter specifications without notice.

YouK

- > For use with wood shelves (customer supplied)
- > Contemporary upright design
- > Simple, logical grids for effortless planning and installation
- > Welded frame connections provide clean lines without divisions
- > Extremely easy assembly with just a few steps
- > Use in living spaces, kitchens and offices as a wall unit or in bathrooms for extra storage

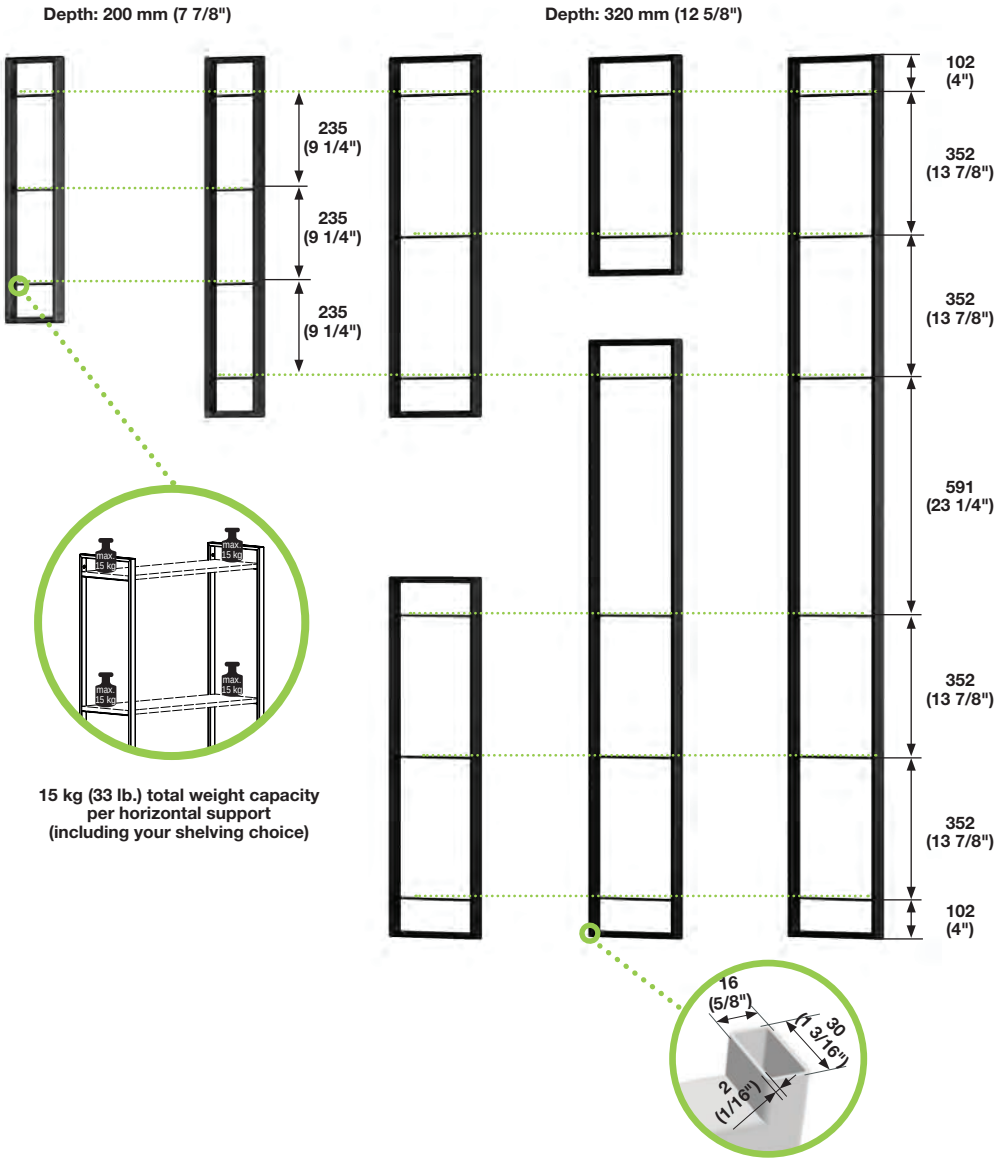

15 kg (33 lb.) total weight capacity per horizontal support (including your shelving choice)

Dimensional data not binding. Dimensions in mm, inches are approximate. We reserve the right to alter specifications without notice.

YouK

> Material: Steel

→ YouK Ladders

> Rail thickness: 30 mm (1 3/16")
> Depth: 320 mm (12 5/8")
> Inside opening depth: 288 mm (11 5/16")

Height	Champagne	Jet Black
550 (21 5/8")	793.20.401	793.20.301
905 (35 5/8")	793.20.402	793.20.302
1500 (59")	–	793.20.303
2210 (87")	–	793.20.304

Supplied With
1 Ladder
2 Cover caps

→ YouK Ladders

> Depth: 200 mm (7 7/8")
> Inside opening depth: 168 mm (6 5/8")
> Finish: jet black

Height	Item No.
668 (26 3/8")	793.20.310
905 (35 5/8")	793.20.311

Supplied With
1 Ladder
2 Cover caps

→ Adjustable Foot

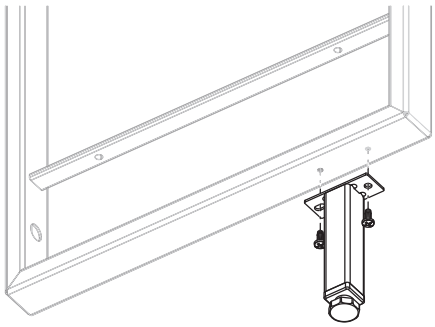

> For ladder depth: 320 mm (12 5/8")
> Height: 100 mm (4")

Finish	Item No.
jet black	793.20.390

Supplied With
1 Foot
2 Screws

Dimensional data not binding. Dimensions in mm, inches are approximate. We reserve the right to alter specifications without notice.

Backsplash Railing System

> Easy to clean rail with concealed screw attachment
> Individual components can be positioned separately

→ Rail

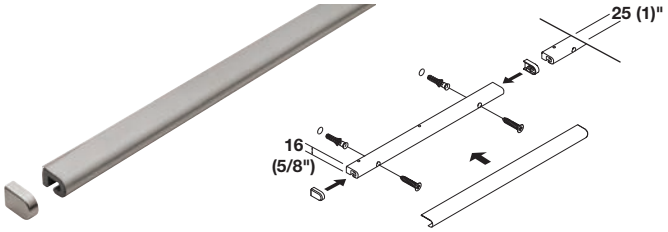

> Material: Rail: Plastic; Color: gray; Cover: Stainless Steel

Length	Item No.
600 (23 5/8")	521.60.606
900 (35 1/2")	521.60.609
1200 (47 1/4")	521.60.612
1500 (59 1/16")	521.60.615

Supplied With
Mounting material

→ Spice Rack

> With 2 shelves
> For jars up to Ø x H: 59 x 110 mm (2 3/8" x 4 3/8")
> W × D × H: 380 × 80 × 275 mm (15" × 3 1/8" × 10 7/8")
> Material: Steel, plated

Finish	Item No.
nickel matt/stainless steel	521.61.625

→ Rail

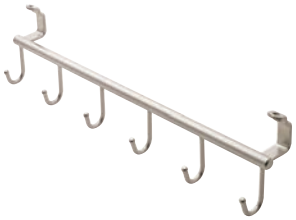

> With 6 hooks
> Length: 380 mm (15")
> Material: Steel, plated

Finish	Item No.
nickel matt	521.61.600

→ Multi-purpose Shelf

> W × D × H: 440 × 150 × 275 mm (17 3/8" × 6" × 10 7/8")
> Material: Steel, plated

Support rails/shelf	Item No.
nickel matt/stainless steel	521.61.620

→ Lid Holder

> Holds 2 pan lids
> W × D × H: 115 × 80 × 255 mm (4 1/2" × 3 1/8" × 10")
> Material: Steel, plated

Finish	Item No.
nickel matt	521.61.630

Dimensional data not binding. Dimensions in mm, inches are approximate. We reserve the right to alter specifications without notice.

Backsplash Railing System

> Easy to clean rail with concealed screw attachment

→ Paper Towel Holder

> For standard 279 mm (11") wide rolls
> W × D × H: 352 × 150 × 255 mm (13 7/8" × 6" × 10")
> Material: Steel, plated

Finish	Item No.
nickel matt	521.61.611

→ Cookbook Holder

> W × D × H: 440 × 47 × 320 mm (17 3/8" × 1 7/8" × 12 1/2")
> Material: Steel, plated

Support rails/shelf	Item No.
nickel matt/stainless steel	521.61.627

→ Knife Holder

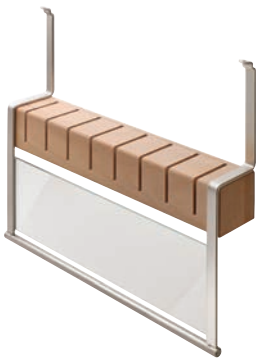

> Holds 8 knives
> W × D × H: 380 × 80 × 255 mm (15" × 3 1/8" × 10")
> Material: Steel, plated
Wood block: Beech

Finish	Item No.
nickel matt	521.61.633

→ Wine Bottle and Glass Shelf

> Holds up to 3 wine bottles and 4 glasses
> W × D × H: 380 × 190 × 275 mm (15" × 7 1/2" × 10 7/8")
> Material: Steel, plated

Finish	Item No.
nickel matt/stainless steel	521.61.626

Dimensional data not binding. Dimensions in mm, inches are approximate. We reserve the right to alter specifications without notice.

Kitchen Rail System

> Ø16 mm (5/8") seamless tubing
> End caps plug into rails

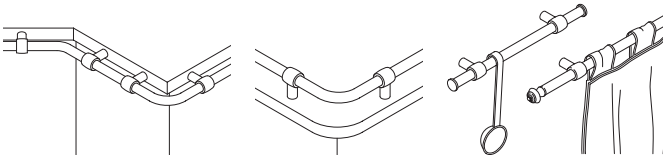

Installed along the front of the countertop | **Installed on top of the countertop** | **Wall mounted**

→ Tubular Rail

> Length: 1500 mm (59 1/16")
> Material: Steel

Finish	Item No.
chrome polished	522.00.236
stainless steel	522.40.015

→ Railing Posts

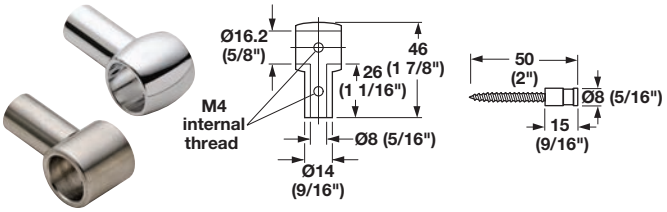

> Press-fits over fastening screw
> Material: Zinc

Finish	Item No.
chrome polished	522.02.212
stainless steel	522.42.000

Supplied With
M4 Set screw and hex key

→ Elbow Section, 90°

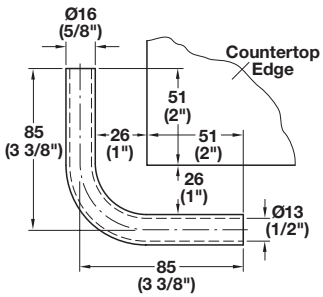

> Material: Steel

Finish	Item No.
stainless steel	522.41.010

→ S-Hook for Railng

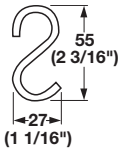

> Material: Steel

Finish	Item No.
chrome polished	522.04.207

Dimensional data not binding. Dimensions in mm, inches are approximate. We reserve the right to alter specifications without notice.

Kitchen Rail System

→ Decorative End Cap

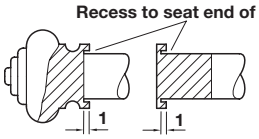

The recess which accommodates the end cap ensures a neatly concealed joint for decorative end caps.

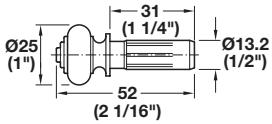

> With profile-style head
> Material: Brass; Sleeve: Plastic

Finish	Item No.
chrome polished	522.03.237

→ Dowel Connector

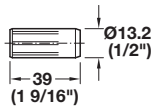

> Plugs into kitchen rails and elbow sections
> Material: Plastic

Color	Item No.
white	520.72.090

→ Decorative End Cap

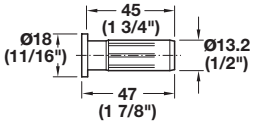

> With flat head
> Material: Brass; Sleeve: Plastic

Finish	Item No.
chrome polished	522.03.228

→ Decorative End Cap

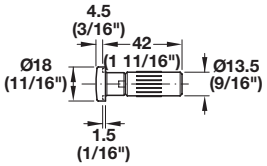

> With flat head
> Material: Stainless Steel; Sleeve: Plastic

Finish	Item No.
matt	522.42.050

Dimensional data not binding. Dimensions in mm, inches are approximate. We reserve the right to alter specifications without notice.

Metal Rail System

> Straight rod and corner rods are inserted through the holes in the posts and are “spliced” inside the post holes

→ Rail System

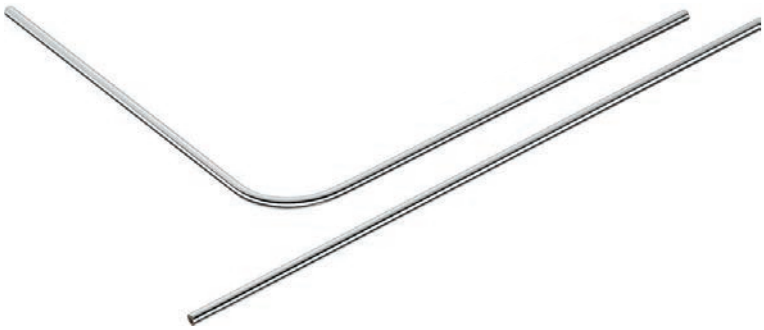

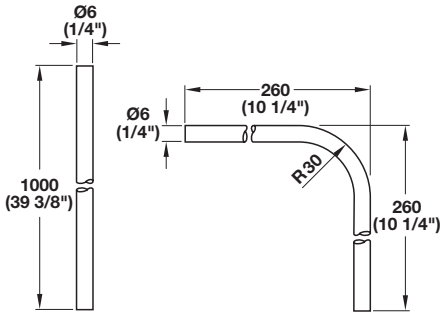

> Rod length: 1000 mm (39 3/8")
> Material: Steel; Finish: polished chrome

Description	Item No.
Rod	522.15.219
90° corners	522.16.216

→ Posts, knock-in

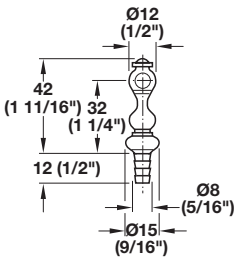

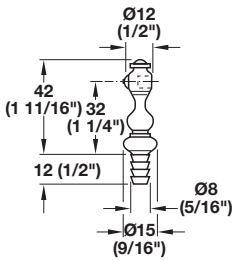

> Material: Zinc; Finish: polished chrome

Description	Item No.
Gallery post	522.17.213
End post	522.17.222

Dimensional data not binding. Dimensions in mm, inches are approximate. We reserve the right to alter specifications without notice.

Tip Out Trays

> Keep sponges and brushes out of sight
> Choose from convenient 2-tray set with hinges or cut-to-size trays

→ Trays

> D x H: 51 x 76 mm (2" x 3")
> Material: Plastic

	Length	
Color	**280 mm (11")**	**362 mm (14")**
white	545.29.770	545.29.771

Supplied With
2 Trays
4 Hinges

→ End Caps

> For cut-to-size trays
> Material: Plastic

Color	Item No.
white	545.29.980

→ Cut-to-size Trays

> L × D × H: 1829 × 60 × 102 mm (72" × 2 1/8" × 4")
> Material: Plastic

Color	Item No.
white	545.29.768

→ Hinge Set

> Material: Steel

	Item No.
	545.29.992

Supplied With
2 Hinges

Dimensional data not binding. Dimensions in mm, inches are approximate. We reserve the right to alter specifications without notice.

Tip Out Trays

> Keep sponges and brushes out of sight
> Minimum opening H x D: 89 x 64 mm (3 1/2" x 2 1/2")
> Opening should be 5 mm (13/16") wider than nominal dimension
> For use with face frame or frameless cabinets
> H x D: 76 x 51 mm (3" x 2")
> Material: Stainless Steel

→ Trays

Width	Item No.
287 (11 15/16")	549.29.080
356 (14")	549.29.081

Dimensional data not binding. Dimensions in mm, inches are approximate. We reserve the right to alter specifications without notice.

Heat Shield

> Ideal for use next to the face of ovens and dishwashers
> Helps prevent damage to cabinetry in high heat kitchen environments
> Material: Steel

→ Flat Shields

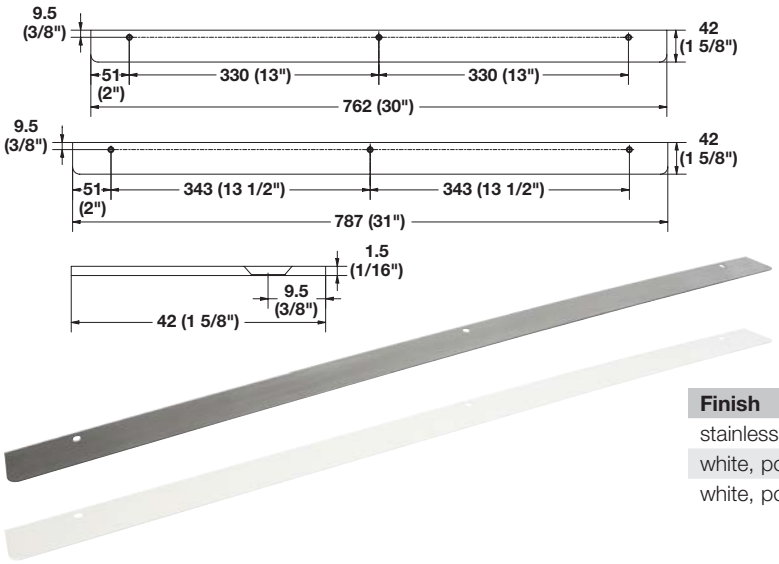

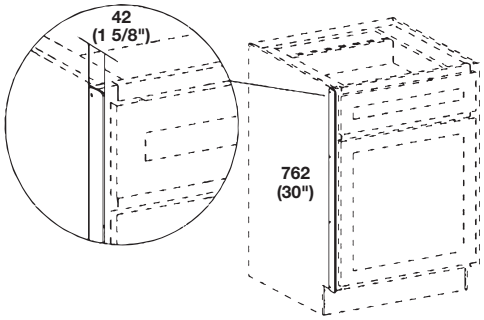

Finish	Length	Item No.
stainless steel brushed	762 (30")	564.08.970
white, powder-coated	762 (30")	564.08.971
white, powder-coated	787 (31")	564.08.975

→ Angled Shields

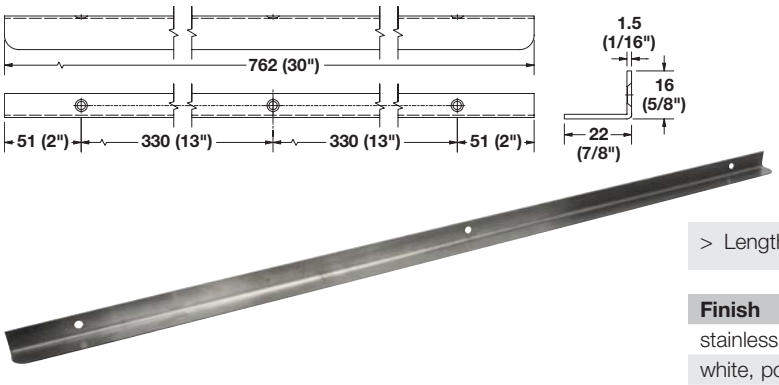

> Length: 762 mm (30")

Finish	Item No.
stainless steel brushed	564.08.972
white, powder-coated	564.08.973

Dimensional data not binding. Dimensions in mm, inches are approximate. We reserve the right to alter specifications without notice.

Under Sink Mats

> Adds a beautiful and durable protective surface for your cabinet

→ Cabinet Protector Mats

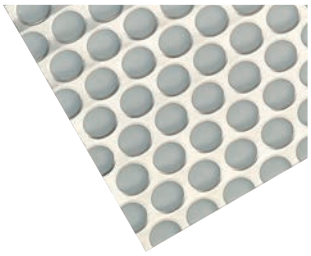

White

Gray/stainless

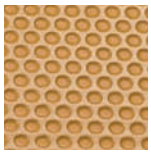

Maple

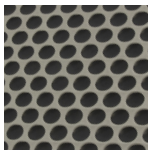

Black/stainless

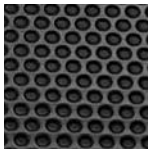

Gray/Flexible Rubber

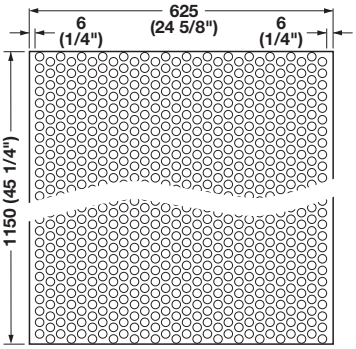

> Cut-to-size to fit in sink cabinet
> Unique dimples collect up to 1 gallon water per 6 square feet
> Material: Polystyrene

Color	D x W	Item No.
white	625 × 1150 (24 5/8" × 45 1/4")	547.91.703
gray/stainless	625 × 1150 (24 5/8" × 45 1/4")	547.91.550
maple	600 × 1150 (23 5/8" × 45 1/4")	547.91.705
black/stainless	625 × 1150 (24 5/8" × 45 1/4")	547.91.350

Note Sold in sheets.

> Flexible rubber mat ships rolled to save shipping costs
> Designed to be easier to trim with scissors for fitting around existing pipes in retrofit and remodel applications
> Easy to insert into a cabinet with a front stile
> W × L: 625 × 1150 mm (24 5/8" × 45 1/4")
> Material: Flexible Rubber

Color	Item No.
gray	547.91.563

Note Sold in rolls. Once rolled out the flexible rubber mat will lay completely flat. If needed, warm slightly with a blow dryer or heat gun on initial installation. Be careful not to overheat or melt the mat.

→ Edge Gasket for Under Sink Mats

> Length: 2438 (8')

	Item No.
	556.68.500

→ Sample Chain

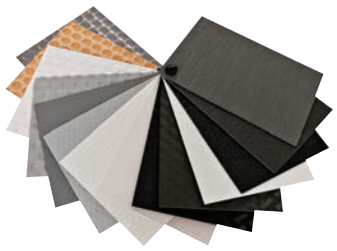

	Item No.
	732.06.790

Supplied With
146 x 105 mm (5 3/4" x 4 1/8") piece of all of our non-slip mat and cabinet protector mat products.

Dimensional data not binding. Dimensions in mm, inches are approximate. We reserve the right to alter specifications without notice.

Stepfix Folding Step Stool

> Stepfix can be hung on a side panel using the optional hanging bracket
> A sturdy, steel, compact folding step stool for kitchen use
> Non-slip rubber treads
> Safety spring and smooth folding mechanism
> Weight capacity: 150 kg (330 lbs.)

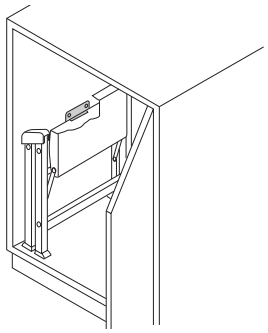

→ Step Stool

> With 2 steps: 200 x 300 mm (7 3/4" x 11 3/4") covered with non-slip rubber treads
> Material: Steel, powder-coated; Feet: Plastic

Finish	Item No.
anthracite/black	505.04.310

→ Toekick Bracket, optional

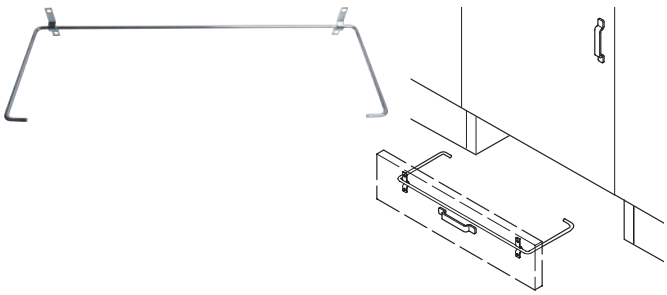

> Attaches to step stool and toekick to slide under cabinet
> With wheels that snap onto the Stepfix ladder
> Folds down to 95 mm (3 3/4")
> A minimum of 100 mm (4") is required
> Material: Steel, galvanized

	Item No.
	505.04.319

→ Hanging Bracket, optional

> Screw mounts to cabinet side panel to stow step stool
> L × D × H: 140 × 30 × 35 mm (5 1/2" × 1 1/8" × 1 3/8")
> Material: Steel, powder-coated

Finish	Item No.
anthracite/black	505.04.322

Dimensional data not binding. Dimensions in mm, inches are approximate. We reserve the right to alter specifications without notice.

Folding Step Stool

> Folds down for easy storage–just 65 mm (2 9/16") wide
> Carry handle features a combined release and go function
> Non-slip rubber treads
> Weight capacity: 150 kg (330 lbs.)
> With 2 steps covered with non-slip ribbing
> L x W x H: 450 x 70 x 600 mm (17 23/32" x 2 3/4" x 23 5/8")
> Material: Legs: Steel; Steps: Aluminum; Feet: Rubber
Handle: Plastic; Finish: silver/black

→ Mini Comfort

	Item No.
	505.03.232

Dimensional data not binding. Dimensions in mm, inches are approximate. We reserve the right to alter specifications without notice.

Holders and Grommets

→ Ultrahold

> Use in pantry, garage, workshop, office, storage room
> Aluminum rail will not rust
> Non-slip covering on hooks
> Adjustable sliding clamp
> Can be removed from rail and fastened independently to wall
> Each clamp holds up to 9 kg (20 lbs.)
> Height of track: 54 mm (2 1/8")
> Depth of track: 15 mm (9/16")
> Overall depth from back of track to tip of hook: 130 mm (5 1/8")
> Material: Rail: Aluminum, anodized; Clip: Steel

Length	Item No.
457 (18") (4 hooks)	888.00.015
914 (36") (8 hooks)	888.00.024

→ Broomstick Holder

> With four holders
> For concealed screw mounting
> W × D × H: 318 × 27 × 75 mm (12 1/2" × 1 1/16" × 2 15/16")
> Material: Housing: Plastic; Color: white; Hooks: Steel
Finish: nickel-plated, rubber-coated

	Item No.
	520.44.700

Supplied With
Mounting hardware

→ Broomstick Holder

> Screw mounted
> W × D × H: 51 × 40 × 50 mm
(2" × 1 9/16" × 1 15/16")
> Material: Steel, bright galvanized
Rollers: Rubber

	Item No.
	520.10.009

Supplied With
50 pcs.

→ Bottle Holder Grommet

> For insertion in round opening
> Height to lower edge: 24 mm (15/16")
> Ø: 105 mm (4 1/8")
> Material: Plastic

Color	Item No.
black	520.39.620

Dimensional data not binding. Dimensions in mm, inches are approximate. We reserve the right to alter specifications without notice.

Racks, Baskets and Fences

→ Spice Rack

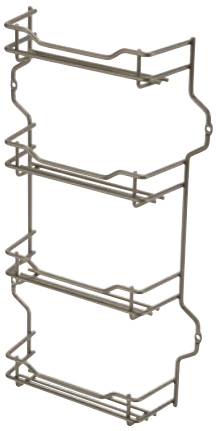

> With screw mounting eyes
> Number of shelves: 4
> Depth: 66 mm (2 5/8")
> Material: Steel

W x H	champagne	chrome
244 x 395 (9 5/8" x 15 9/16")	543.19.860	543.19.260
391 x 395 (15 3/8" x 15 9/16")	543.19.880	543.19.280

→ Door Rack

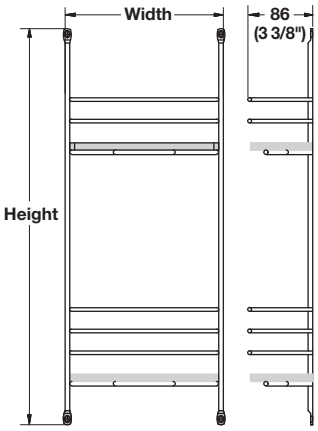

> Mounts to back of door in a base cabinet
> Holds cleaning supplies or other lightweight products
> Versatile storage for kitchen or bath
> For 380, 457 and 533 mm (15", 18" and 21") wide overlay or inset doors
> Material: Birch and Metal; Finish: chrome

Door size (W x H) nominal	Door type	W x H	Item No.
380 x 610 (15" x 24")	overlay	216 x 533 (8 1/4" x 20 5/8")	543.17.200
380 x 610 (15" x 24")	inset	216 x 457 (8 1/4" x 18")	543.17.210
457 x 610 (18" x 24")	overlay	222 x 533 (11 1/4" x 20 5/8")	543.17.201
457 x 610 (18" x 24")	inset	222 x 457 (11 1/4" x 18")	543.17.211
533 x 610 (21" x 24")	overlay	362 x 533 (14 1/4" x 20 5/8")	543.17.202
533 x 610 (21" x 24")	inset	362 x 457 (14 1/4" x 18")	543.17.212

→ Multi-purpose Basket

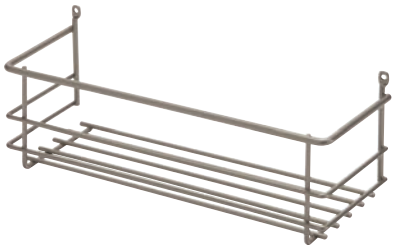

> With screw mounting eyes
> Three-sided
> W × D × H: 312 × 101 × 112 mm (12 1/4" × 4" × 4 1/2")
> Material: Steel

Finish	Item No.
champagne	540.36.807
chrome	540.36.207

Dimensional data not binding. Dimensions in mm, inches are approximate. We reserve the right to alter specifications without notice.

HÄFELE

Racks

→ Stemware Rack

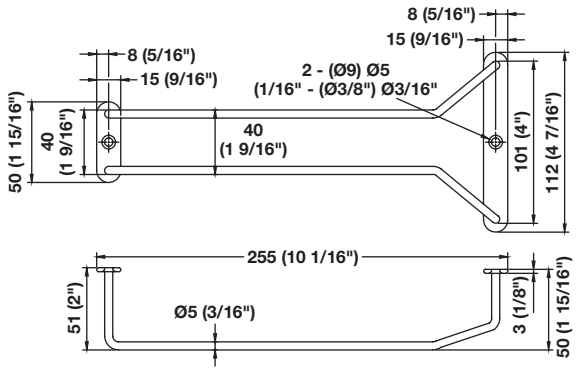

> Accommodates most glass styles
> Suspends glasses from base
> Single row to adjust for bowl size
> Mounting holes centered on front and back rails
> W × D × H: 112 × 255 × 50 mm (4 7/16" × 10 1/16" × 1 15/16")
> Material: Steel wire

Finish	Item No.
chrome	541.93.260
matt black	541.93.360

Dimensional data not binding. Dimensions in mm, inches are approximate. We reserve the right to alter specifications without notice.

This page is left blank intentionally.

Dimensional data not binding. Dimensions in mm, inches are approximate. We reserve the right to alter specifications without notice.

Racks

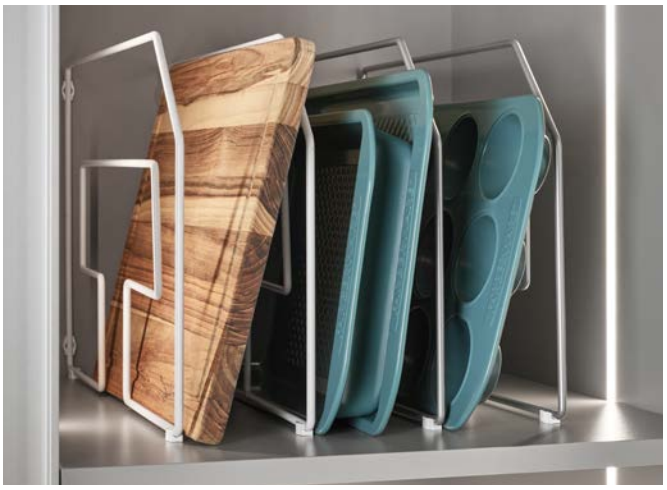

→ Baking Rack Support

> Screw mounted to cabinet base
> W × D × H: 75 × 300 × 250 mm (3" × 12" × 10")
> Material: Steel

Finish	Item No.
champagne	540.42.800
chrome	540.42.200

→ Tray Divider

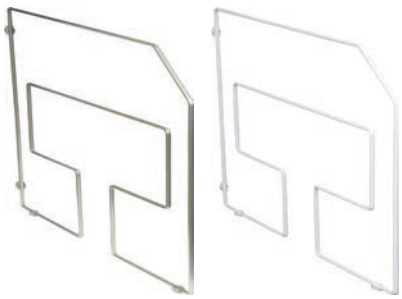

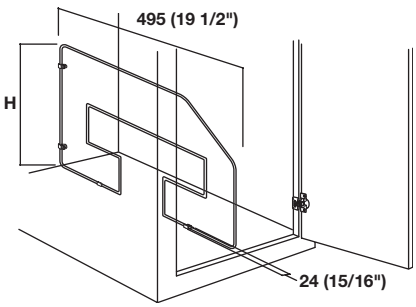

> Installs easily with four attachment clips
> W × D: 24 × 495 mm (15/16" × 19 1/2")

Finish	Height	KV No.	Item No.
frosted nickel	305 (12")	TD12-FN	520.18.601
	457 (18")	TD18-FN	520.18.602
white	305 (12")	TD12-W	520.18.701
	457 (18")	TD18-W	520.18.702

→ Fence

> For wood shelves
> Press-fits in 5 mm (3/16") diameter drilled holes
> Height: 39 mm (1 1/2")
> Material: Steel; Finish: chrome

Length	Drilling distance	# Press fit plugs	Item No.
248 (9 3/4")	192 (7 9/16")	2	547.51.218
298 (11 3/4")	242 (9 1/2")	2	547.51.227
348 (13 11/16")	292 (11 1/2")	2	547.51.236
398 (15 11/16")	342 (13 7/8")	2	547.51.245
448 (17 5/8")	392 / 196 (15 7/16" / 7 11/16")	3	547.51.254
548 (21 9/16")	492 / 246 (19 3/8" / 9 11/16")	3	547.51.263

Dimensional data not binding. Dimensions in mm, inches are approximate. We reserve the right to alter specifications without notice.

Countertop Supports

> Maximum distance between supports: 900 mm (35 1/2")
> Mounts on the countertop
> For solid tops
> Weight capacity: 40 kg (88 lbs.)
> Material: Steel; Finish: stainless steel effect

→ Square Support

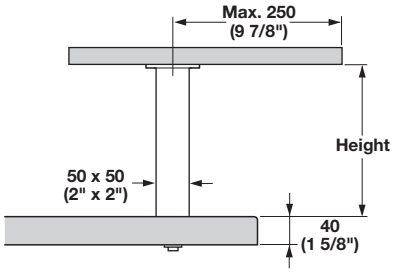

Height	Item No.
170 (6 11/16")	505.23.001
190 (7 1/2")	505.23.002
230 (9 1/16")	505.23.003

Supplied With
Mounting hardware

→ Square Angled Support

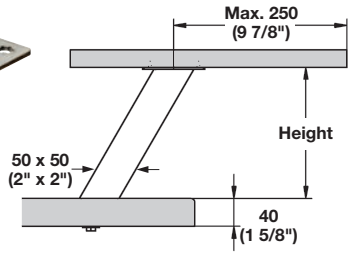

> Slanted 60°

Height	Item No.
170 (6 11/16")	505.23.021
190 (7 1/2")	505.23.022
230 (9 1/16")	505.23.023

Supplied With
Mounting hardware

→ Round Support

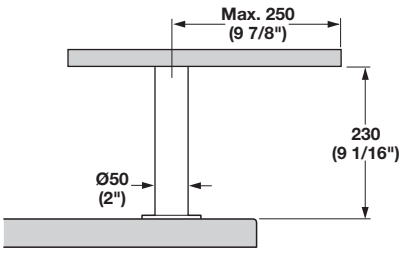

	Item No.
	505.24.003

Supplied With
Mounting hardware

Dimensional data not binding. Dimensions in mm, inches are approximate. We reserve the right to alter specifications without notice.

HÄFELE

Countertop Supports

→ Support

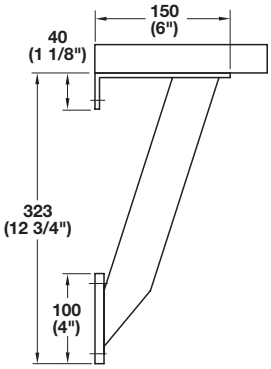

> Side mount
> Weight capacity: 50 kg (110 lbs.)
> Material: Aluminum

Finish	Item No.
silver, matt anodized	505.14.956

Supplied With
Mounting hardware

→ Support

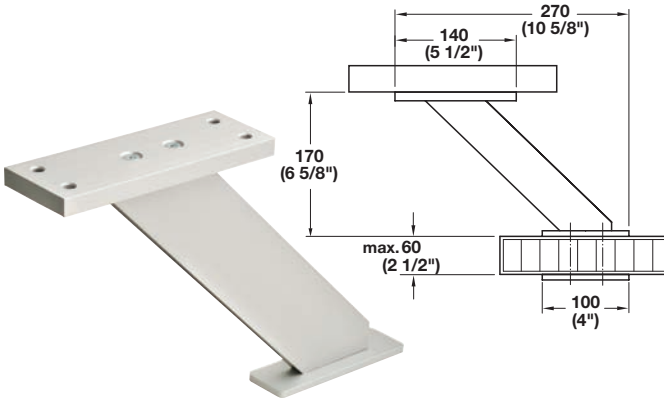

> Countertop mount
> Weight capacity: 25 kg (55 lbs.)
> Material: Aluminum

Finish	Item No.
silver, matt anodized	505.14.926

Supplied With
Mounting hardware

Dimensional data not binding. Dimensions in mm, inches are approximate. We reserve the right to alter specifications without notice.

Shelf Suspension System

> For shelves suspended from the ceiling
> A 14 mm (9/16") hole is required to attach through wood or glass

→ Beta System

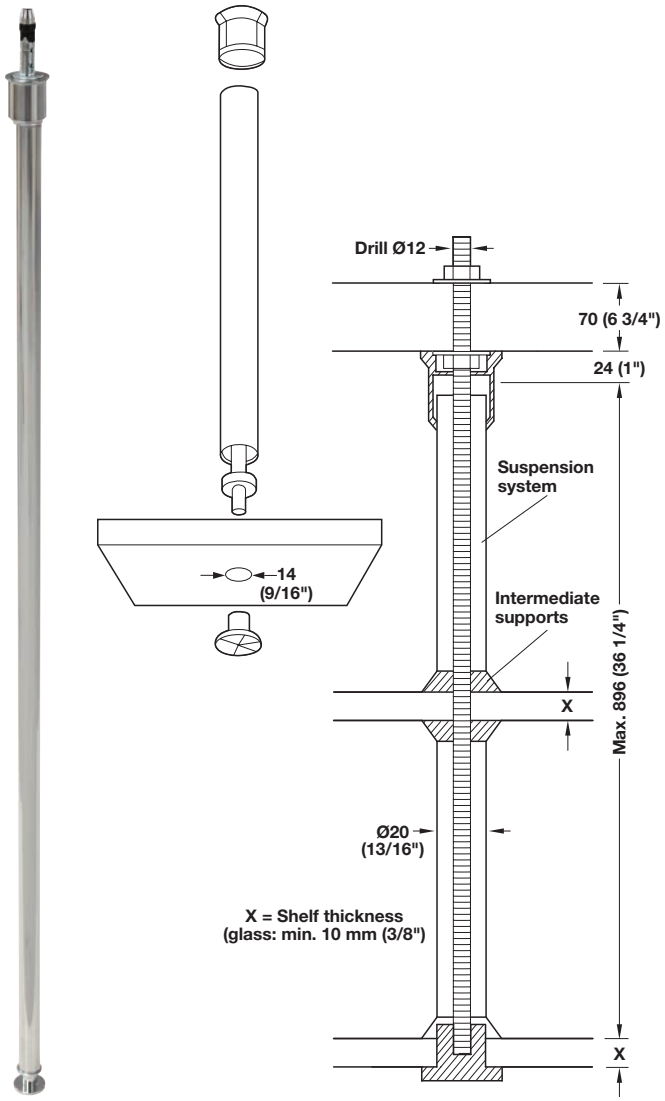

> Weight capacity: 50 kg (110 lbs.) per rod
> Material: Steel, surface threaded

Finish	Item No.
chrome polished	828.50.208
chrome matt	828.50.408

Supplied With
Threaded rod: M8 X 1000 mm (39 3/8")
Tube: Ø20 × 896 mm (35 1/4")
Upper sleeve
Centering ring
Sleeve nut
Rubber clamping ring

→ Intermediate Supports

> For additional ceiling shelves to the Beta system
> Material: Brass, electroplated

Finish	Item No.
chrome polished	828.50.210
chrome matt	828.50.410

Dimensional data not binding. Dimensions in mm, inches are approximate. We reserve the right to alter specifications without notice.

Pull-Out Table Systems

→ Rapid Pull-Out Table

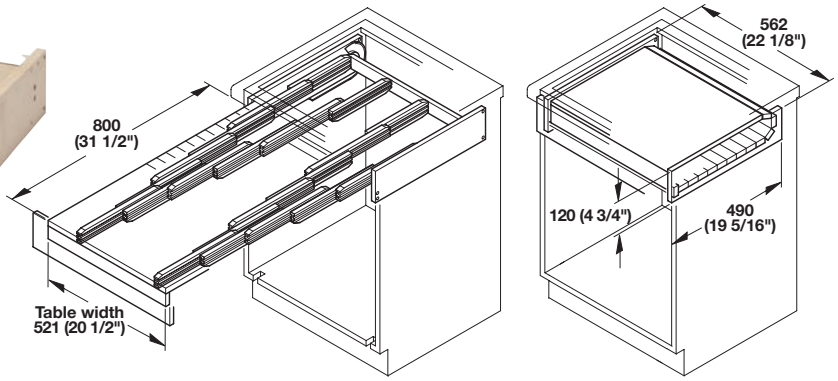

> Self-supporting table
> A drawer front panel can be screw mounted directly onto the table front panel
> The system can be subsequently installed in place of a drawer or between two cabinets
> Fitting is not visible when installed; Cantilevered
> For minimum interior width: 562 mm (22 1/8")
> Weight capacity: 100 kg (220 lbs.), evenly distributed
> Material: Wood; Table top: Melamine, plastic-coated
Telescopic guides: Beech

Color	Item No.
white/gray dotted	505.58.703
maple	505.58.103

Supplied With Housing, Guides, Front panel

→ Top Flex Pull-Out Table

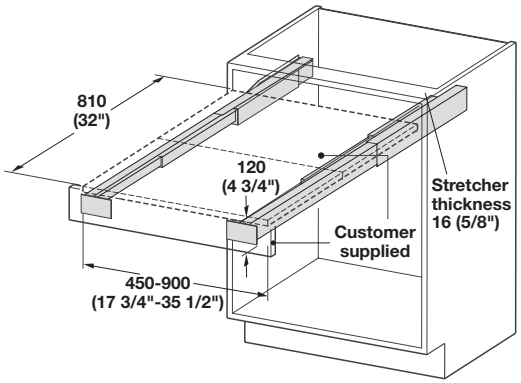

> Extension fitting can support any width surface up to 900 mm (35 1/2")
> As the table is extended, the front panel drops down automatically until the top is flush with the table
> Recommended table top thickness: 16 mm (5/8")
> Weight capacity: 30 kg (66 lbs.)
> Extended length: 810 mm (32")
> Cabinet width: 450–900 mm (17 3/4"–35 1/2")
> Interior cabinet opening height: 120 mm (4 3/4")
> Minimum cabinet depth: 510 mm (20")
> Material: Steel, plated

	Item No.
	505.70.200

Note
Table top and front panel are customer supplied.

Dimensional data not binding. Dimensions in mm, inches are approximate. We reserve the right to alter specifications without notice.

Appliance Lift

> Kitchen appliances raise effortlessly with a gas cylinder assist and then lock securely into place
> Can be outfitted with a custom block platform or a quality pre-made maple wood platform
> Lift can be positioned at two different levels: flush with counter or 50 mm (2") below counter

Note
Install 13 mm (1/2") down and 13 mm (1/2") back from upper Face Frame (as shown).

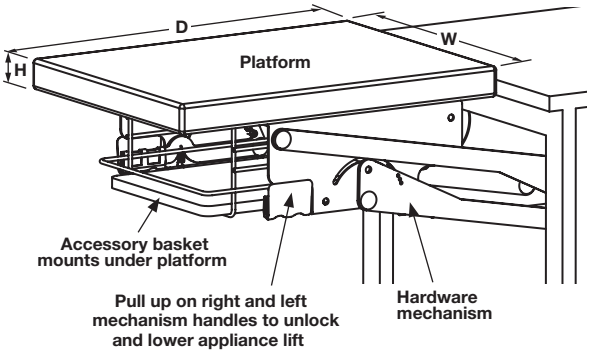

→ Hardware Mechanism

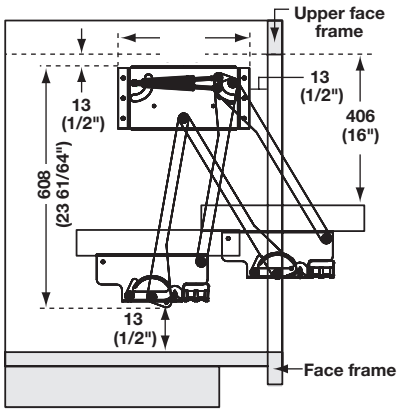

> (W) Width: Platform surface + 64 mm (2 1/2")
> (H) Height: 608 mm (23 61/64")
> (D) Depth: Maximum 330 mm (13") or platform depth
> Material: Steel

Finish	Item No.
platinum	504.20.900

Supplied With
Right arm
Left arm

Note
Load capacity should not exceed 13 kg (30 lbs.).

→ Block Platform

> H x D: 38 x 457 mm (1 1/2" x 18")
> Material: Maple

Width	Item No.
343 (13 1/2")	504.20.190
419 (16 1/2")	504.20.191

→ Accessory Basket

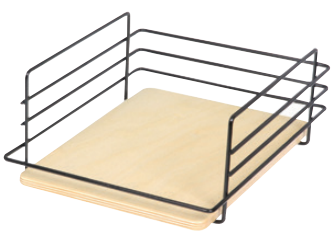

> W x D x H: 251 x 124 x 327 mm (9 7/8" x 4 7/8" x 12 7/8")
> Material: Base: Maple; Surround: Steel; Finish: black

	Item No.
	504.20.199

Dimensional data not binding. Dimensions in mm, inches are approximate. We reserve the right to alter specifications without notice.

Wood Accessories

> Material: Maple

→ Wine Lattice

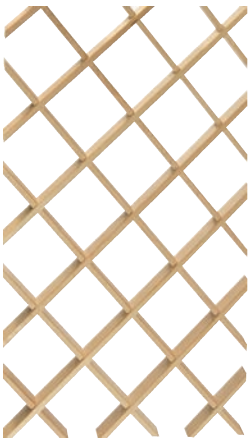

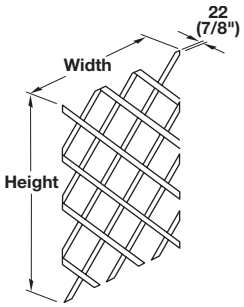

> Cut-to-size
> Stave width: 19 mm (3/4")

W x H	Storage	Item No.
432 × 737 (17" × 29")	14 bottles	541.98.170
432 × 914 (17" × 36")	17 bottles	541.98.171
584 × 737 (23" × 29")	22 bottles	541.98.172
584 × 1067 (23" × 42")	31 bottles	541.98.173

Supplied With
Front and back racks

→ Stemware Rack

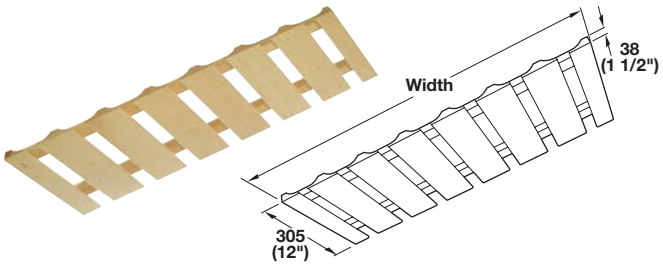

> Accommodates most stemware styles
> Glass hangs from base

Width	Item No.
457 (18")	541.98.184
762 (30")	541.98.187
914 (36")	541.98.188

Supplied With
Front and back racks

Dimensional data not binding. Dimensions in mm, inches are approximate. We reserve the right to alter specifications without notice.

Wood Accessories

→ Plate Rack

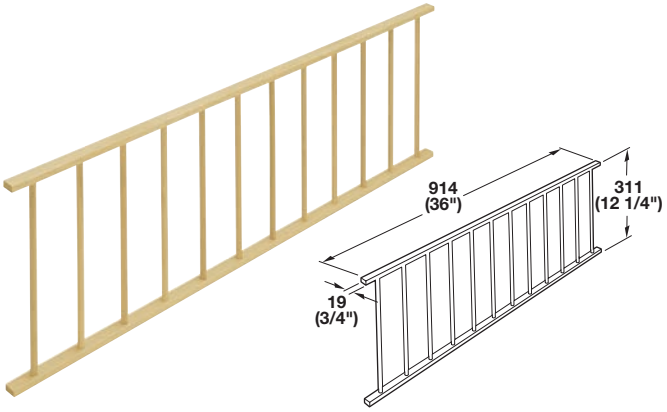

> Accommodates up to 13 plates
> Spacing between rails: 41 or 51 mm (1 5/8" or 2") on center
> 3 middle rails are removable for easy access
> Can be trimmed to any size
> Rail Ø: 10 mm (3/8")
> Material: Maple

	Item No.
	541.98.160

Supplied With
Front and back rails

→ Door Mount Spice Rack

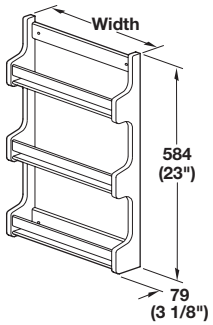

> For left or right hand installation
> Mount behind 305, 381, 457 mm (12", 15", 18") or larger doors
> Store containers up to Ø38 mm (1 1/2")

Width	Item No.
241 (9 1/2")	543.39.100
318 (12 1/2")	543.39.101
394 (15 1/2")	543.39.102

→ Bottle Rack

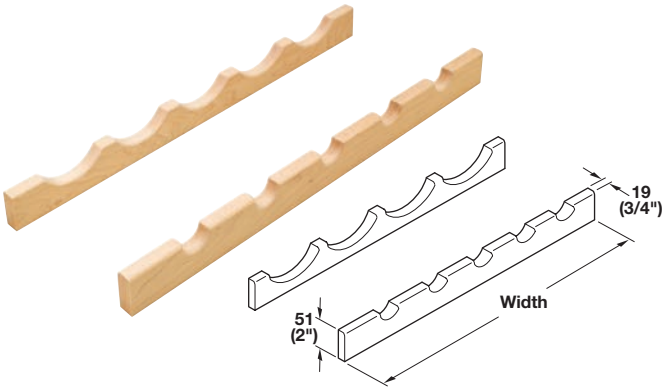

> Can be trimmed to fit 457 or 762 mm (18" or 30") spaces
> Material: Maple

Width	Storage	Item No.
610 (24")	5 bottles	541.98.196
1219 (48")	10 bottles	541.98.199

Supplied With
Front and back racks

Dimensional data not binding. Dimensions in mm, inches are approximate. We reserve the right to alter specifications without notice.

Lattice Grills

> Slats are shaped and sanded prior to assembly, so that the grill can be varnished without further treatment
> Glued, triple-laminated slats are exceptionally resistant to warping
> Double-sided, sanded, and ready to stain
> Material: Natural Wood, sanded

→ Decorative and Ventilation Grills

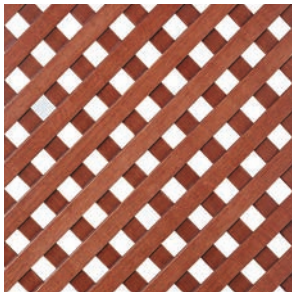

> Thickness: 5 mm (3/16")
> Spacing: 15 mm (9/16") staves with 15 mm (9/16") gaps
> Slats are arranged diagonal at 45° to the panel edges
> Panel dimensions: 2000 × 800 mm (78 3/4" × 31 1/2")

Wood species	Item No.
Beech	574.93.100
Cherry	574.93.600
Oak	574.93.400
Walnut	574.93.700

→ Decorative and Ventilation Grills

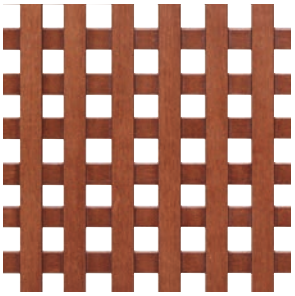

> Thickness: 5 mm (3/16")
> Spacing: 15 mm (9/16") staves with 15 mm (9/16") gaps
> Slats are arranged at 90° to the panel edges (square)
> Panel dimensions: 2000 × 800 mm (78 3/4" × 31 1/2")

Wood species	Item No.
Beech	574.93.110
Cherry	574.93.610
Oak	574.93.410
Pine	574.93.010
Walnut	574.93.710

→ Decorative and Ventilation Grills

> Rounded on one side
> Spacing: 12 mm (1/2") staves with 12 mm (1/2") gaps
> Slats are arranged at 45° to the panel edges
> Panel dimensions: 1200 × 600 mm (47 1/4" × 23 5/8")

Wood species	Thickness	Item No.
Beech	3.0	574.90.301
Oak	3.4	574.90.409
Maple	3.4	574.90.101
Pine	3.0	574.90.001
Cherry	2.0	574.90.601

Dimensional data not binding. Dimensions in mm, inches are approximate. We reserve the right to alter specifications without notice.

Slimline Sweepovac Kitchen Vacuum

- > Easy installation
- > Reduces household work – no bending or dustpan
- > Strong suction power: Dirt, crumbs, even pet hair are drawn in immediately
- > Can be used to clean debris off brush head
- > Re-usable dust bags are easy to remove
- > Bags hold up to 12 weeks of sweepings
- > For kitchens, utility rooms, motor homes and more
- > Kick switch with a broom or foot to draw in the dirt that is brushed up in front of the kitchen vacuum
- > The new optional extending hose allows for vacuuming drawers, which can replace a vacuum cleaner in small spaces
- > Kick switch for turning on or off, with bag full indicator light and safety cut-out – switch turns off automatically after 10 seconds

→ Sweepovac

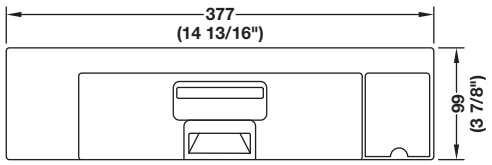

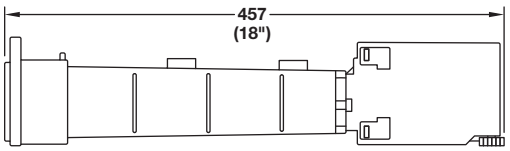

- > Plinth height: min. 100 mm (4")
- > Cut-out: 342 x 94 mm (13 15/32" x 3 3/4")
- > Power consumption: 650 W
- > UL listed
- > Finish: stainless steel colored

	Item No.
	565.29.994

Supplied With
Vacuum unit
Front plate
Mains lead, 3 m (118 1/8"), with schuko safety plug
3 Disposable dust bags
Reusable dust bag
HEPA filter
Template for plinth cut-out
4 Fixing screws ø4 x 20 mm (25/32")
Installation instructions

→ Replacement Bags

- > 3 disposable bags, 1 HEPA filter

	Item No.
	565.29.086

→ Extending Hose, optional

- > Extends from 1.8 m to 5.5 m (70 55/64" x 216 17/32")

	Item No.
	565.29.995

Supplied With
3 nozzles
Crevice nozzle 250 mm (9 13/16") long
Hard floor/parquet floor nozzle 150 mm (5 7/8") wide
Upholstery nozzle 150 mm (5 7/8") wide

Dimensional data not binding. Dimensions in mm, inches are approximate. We reserve the right to alter specifications without notice.

Ventilation Grills

→ Air Ventilation Grommet

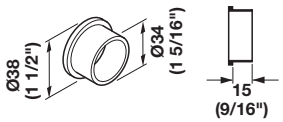

> Recess mounted
> Material: Plastic

Color	Item No.
black	571.27.312

→ Air Ventilation Cap

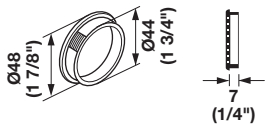

> Recess mounted, with harpoon-type fitting
> Material: Plastic

Color	Item No.
white	571.09.767
brown	571.09.167

→ Air Ventilation Cap

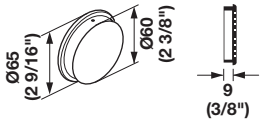

> Recess mounted
> Material: Plastic

Color	Item No.
white	571.03.765
brown	571.03.165

→ Air Ventilation Cap

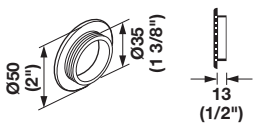

> Recess mounted, with harpoon-type fitting
> Material: Plastic

Color	Item No.
white	571.10.700

→ Air Ventilation Cap

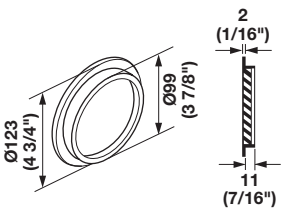

> Recess mounted, with flanged rim
> Ventilation area cm2: 50.0
> Material: Plastic

Color	Item No.
white	571.67.718

Dimensional data not binding. Dimensions in mm, inches are approximate. We reserve the right to alter specifications without notice.

Ventilation Grills

→ Air Ventilation Grill

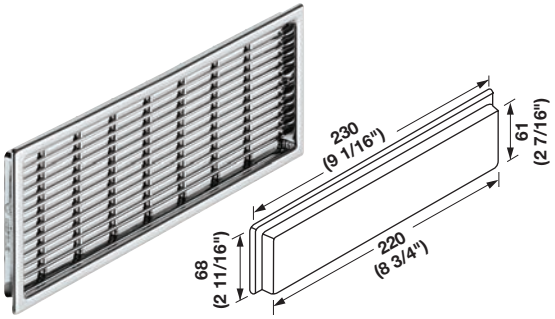

> With flanged rim
> Ventilation area cm2: 42.24
> Material: Plastic

Finish	Item No.
chrome-plated	571.54.248

→ Air Ventilation Grill

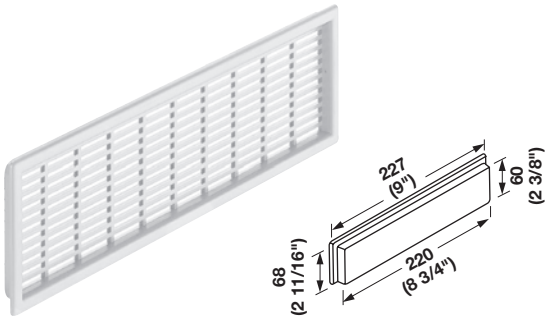

> With flanged rim
> Ventilation area cm²: 60
> Material: Plastic

Color	Item No.
white	571.55.343

→ Air Ventilation Grill

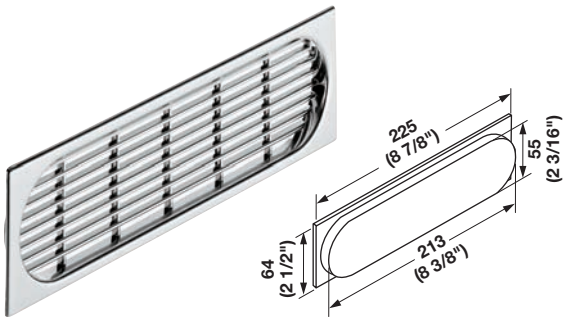

> With flanged rim and oval recess section
> Without holes
> Mounts with adhesive
> Ventilation area cm2: 45
> Material: Plastic

Finish	Item No.
chrome-plated	571.52.208

→ Air Ventilation Grill

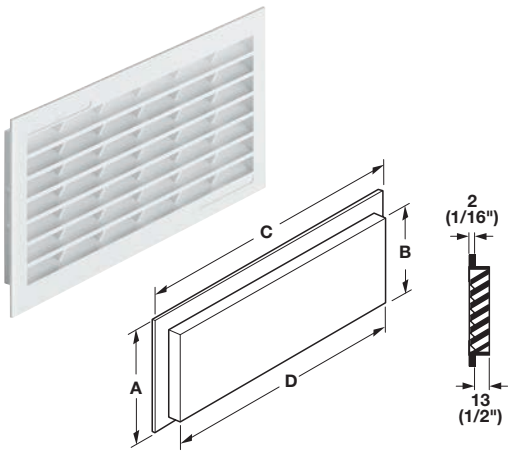

> With flanged rim
> Material: Plastic; Color: white

Dimensions				Ventilation area cm²	Item No.
A	B	C	D		
108 (4 1/4")	84 (3 5/16")	254 (10")	230 (9")	100.0	571.64.726
120 (4 3/4")	96 (3 13/16")	299 (11 3/4")	275 (10 7/8")	150.0	571.64.735
132 (5 3/16")	108 (4 1/4")	338 (13 5/16")	314 (12 3/8")	200.0	571.64.744

Dimensional data not binding. Dimensions in mm, inches are approximate. We reserve the right to alter specifications without notice.

Powered Vanity Drawers

→ Vanity Drawers

- > Vanity drawers with powering outlets and cable management arm for attaching to back of cabinet
- > Designed for 21" deep base cabinets
- > Available in 3 configurations and sizes for both framed and frameless construction
- > Dovetail construction
- > Units are fabricated with notches and holes to accept standard 457 mm (18") undermount slides (customer supplied)
- > Features metal storage grommets for organizing accessories such as; hair dryers, curling irons, brushes, etc.
- > All units have a plastic top tray for storage
- > Front panel mounting:
  - framed construction with figure eight mounting brackets
  - frameless construction with through holes to mount drawer face
- > Please be sure drawer height opening is tall enough to accommodate items to be stored
- > Power center ratings:
  - AC 125V, 60Hx, 15 amp maximum
  - with overload protection switch
  - 1829 mm (6 ft.) power cord with plug
- > UL recognized components

Note Slides and mounting brackets are not included.

→ 12" Vanity Drawer

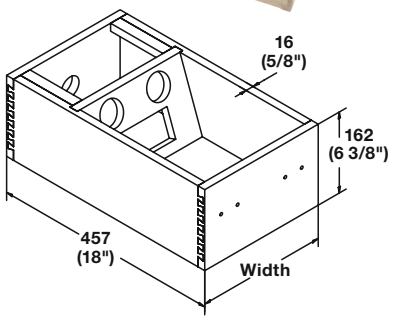

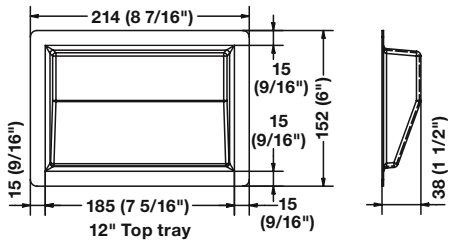

Application	Width	Item No.
frameless cabinets	262 (10 5/16")	545.24.137
face frame cabinets	219 (8 5/8")	545.24.157

Supplied With 2 pcs. 51 mm (2") diameter storage tubes with open bottoms, Power center with 2 tamper resistant AC outlets

→ 15" Vanity Drawer

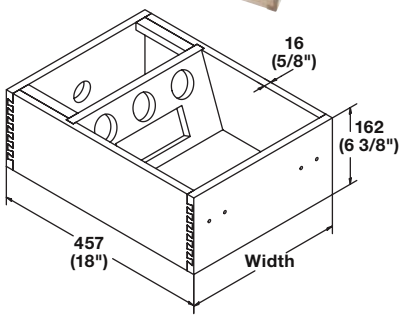

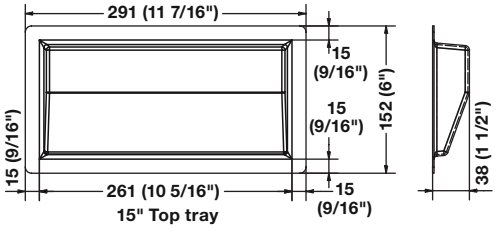

Application	Width	Item No.
frameless cabinets	338 (13 5/16")	545.24.138
face frame cabinets	295 (11 5/8")	545.24.158

Supplied With 3 pcs. 51 mm (2") diameter storage tubes with open bottoms, Power center with 3 tamper resistant AC outlets

Dimensional data not binding. Dimensions in mm, inches are approximate. We reserve the right to alter specifications without notice.

Powered Vanity Drawers

→ 18" Vanity Drawer

Application	Width	Item No.
Frameless cabinets	414 (16 5/16")	545.24.159
Face frame cabinets	372 (14 5/8")	545.24.139

Supplied With
3 pcs. 51 mm (2") diameter storage tubes with open bottoms
1 pc. 76 mm (3") diameter storage tubes with open bottom
Power center with 3 tamper resistant AC outlets

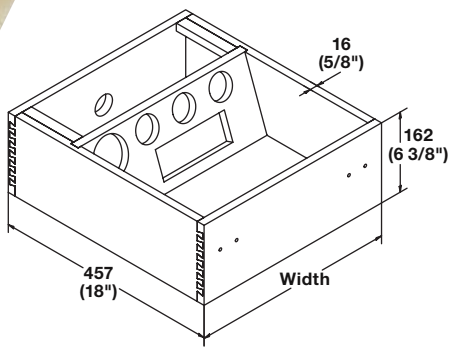

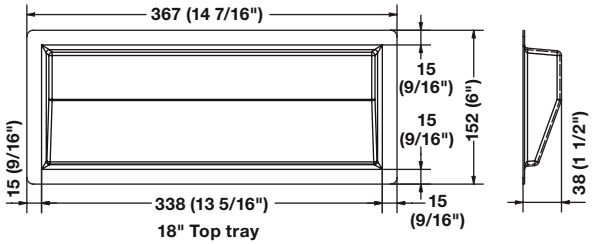

18" Top tray

→ Mounting

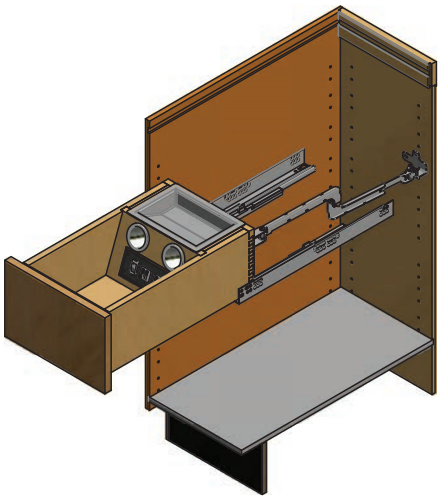

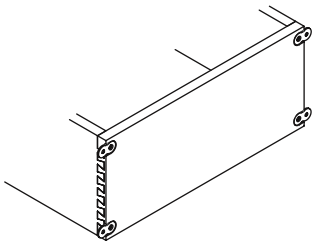

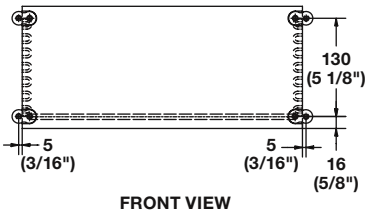

FRONT VIEW
Face framed construction with mounting brackets

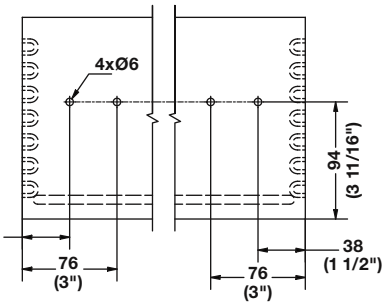

FRONT VIEW
Frameless construction with drawer face mounting holes

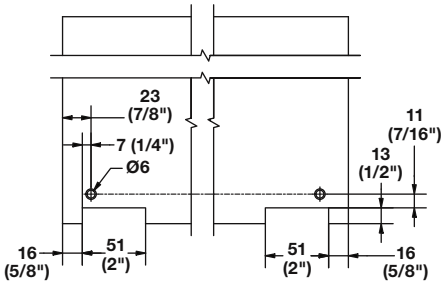

BACK PANEL DETAIL
For undermount slides

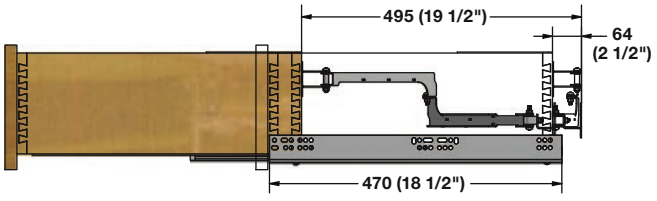

Cable arm drawer extension

Dimensional data not binding. Dimensions in mm, inches are approximate. We reserve the right to alter specifications without notice.

4

HÄFELE

HOME AND CLOSET ORGANIZATION

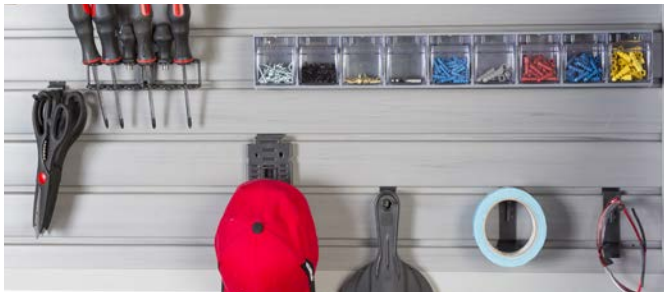

Bed Fittings

Wall Bed Fittings ____ 4.4–4.5
Häfele Wall Bed ____ 4.6–4.7
Queen Wall Bed ____ 4.8–4.9

Custom Products

Library Ladders ____ 4.10–4.11
EcoDomo Leather and Vinyl Components ____ 4.12–4.17

TAG Omni Track®

Ready Pack Kits ____ 4.18–4.19
Wall Tracks/Mounting Components ____ 4.20–4.21
Track Joiner/Shelf Stiffener/Handles ____ 4.22
Tie/Belt/Coat Hooks ____ 4.23
Bracelet/Valet Hooks ____ 4.24
Office Accessories ____ 4.25–4.26
Utility/Garden Hooks ____ 4.27–4.28
Activity/Bike/Fishing Rod/Tool Hooks ____ 4.29–4.31
Paper/Basket Hooks ____ 4.32–4.33
Bins/Leveler/Shelf Bracket ____ 4.34

HandiWALL®

Panels, Screws, Moldings and Color Strips ____ 4.35–4.37
Accessory Kits ____ 4.38–4.41
Storage Basket/Garden Center ____ 4.42
Hooks ____ 4.43–4.45
Shelves/Shoe Rack ____ 4.46
Sports Accessory Holders ____ 4.47–4.52
Storage Bins ____ 4.53
Tool Bars, Screwdriver Racks and Paper Holders ____ 4.54–4.55
Ceiling Storage System ____ 4.56–4.57

Standards and Brackets

Coloma
Profiles and Fasteners ____ 4.58–4.59
Shelf Brackets ____ 4.60–4.61

KV Standards and Brackets ____ 4.62–4.67

Media Storage and TV Lifts

Wire Dividers and Acoustical Cloth ____ 4.68
TV Swivels ____ 4.69
Motorized TV Lifts ____ 4.70–4.72
Digital Safe ____ 4.73

Dimensional data not binding. Dimensions in mm, inches are approximate. We reserve the right to alter specifications without notice.

TAG Wall Mounted Organizer

Symphony ____ 4.74–4.77

TAG Wardrobe Fittings

Lighted Shelf ____ 4.78–4.81
ENGAGE
Pull-Out Shelves ____ 4.82
Jewelry Organizer/Shelf Dividers ____ 4.83
Divided Drawers ____ 4.84–4.85
Shoe Organizer ____ 4.86
Pull-Out Laundry/Pant Frame ____ 4.87–4.89
Storage Boxes ____ 4.90
Synergy Elite
Wardrobe Tubes ____ 4.91–4.93
Tie/Belt Racks ____ 4.93–4.94
Scarf Racks/Accessory Hooks ____ 4.95–4.96
Valets/Valet Pins ____ 4.97–4.98
Shoe Fences ____ 4.99–4.100
Cleat Hooks ____ 4.101–4.103
Mirrors ____ 4.104–4.105
Signature Collection
Wardrobe Tubes/Supports ____ 4.106–4.107
Synergy
Wardrobe Tubes ____ 4.108–4.109
Tie/Belt Racks ____ 4.110
Scarf Racks/Valets ____ 4.111
Shoe Rails ____ 4.112
Pants Rack ____ 4.113
Laundry Hampers ____ 4.114–4.115

Storage and Organization / Wardrobe Accessories

Laundry Hampers ____ 4.116–4.121
Closet Baskets ____ 4.122–4.123
Wine/Spice Storage ____ 4.124–4.127
Shoe Fences ____ 4.128
Wardrobe Tubes/Supports ____ 4.129–4.136
Wardrobe Brackets ____ 4.137
Tie/Belt Racks/Valets ____ 4.138
Wardrobe Rails/Laundry Valet ____ 4.139
Swing Wardrobe Rails ____ 4.140
Shoe Racks ____ 4.1341
Wardrobe Accessories
Jewelry and Belt Trays/Felt Cloth ____ 4.142–4.143
Shelf Dividers ____ 4.143
Häfele Ironfix Ironing Boards ____ 4.144–4.147
Iron Holder ____ 4.148
Wardrobe Lifts ____ 4.149–4.150
Cabinet Hangers ____ 4.151–4.155
Angle Brackets and H-Channel ____ 4.156
Outlet Grommets and Label Frames ____ 4.157
Hooks ____ 4.158–4.166

Dimensional data not binding. Dimensions in mm, inches are approximate. We reserve the right to alter specifications without notice.

HÄFELE

Wall Bed Fitting Set

> Allows for the construction of foldaway beds according to your own plan
> The dimensions listed are internal cabinet dimensions
> The cabinet and bed box construction require a wood thickness of 20 mm (25/32")
> Material: Aluminum

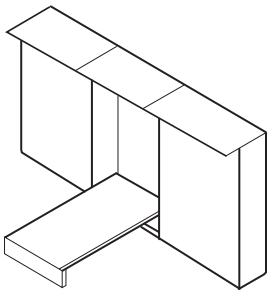

Another possibility is an overhead shelf.

→ Fitting Set for lengthwise mounting

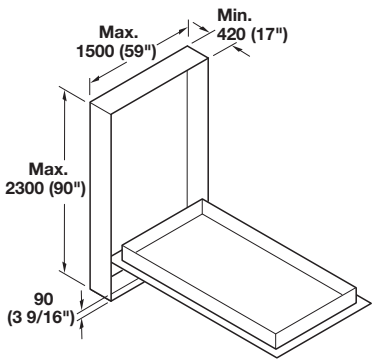

Finish	Item No.
black	271.95.203

Supplied With
Foldaway fittings with pivot bearing and positioning bolt for gas pistons
2 Safety stops

Note
It is essential for foldaway beds to be secured against tipping, according to EN 1129, (check the floor for suitability). Two safety stops are enclosed with every fitting set.

Dimensional data not binding. Dimensions in mm, inches are approximate. We reserve the right to alter specifications without notice.

Wall Bed Fitting Set

> The angular feet with mounting plate are screw mounted to the foot side of the bed frame and to the inside of the front panel
> A minimum 40 x 40 mm (1 5/8" x 1 5/8") square beam is needed on four sides as slatted frame support

Bed weight	Internal cabinet height	Internal cabinet width	Minimum 4 mm (5/32")
For selecting the gas-loaded spring, the bed weight is needed. Bed box and slatted mattress frame + mattress and bedding	Mattress length + 2 x bed frame thickness + 125 mm (4 15/16")	Mattress width 2 x bed frame thickness + 54 mm (2 1/8")	Gap on four sides between cabinet and front panel.

→ Angular Feet

> To support the opening bed
> When opening the bed, the angular feet must be extracted, turned by 90° and retracted to the stop
> Material: Steel, powder-coated

Finish	Item No.
black/aluminum	271.95.361

Supplied With
2 Feet

→ Gas Pistons

> Pre-stressed with tightening strap
> Tightening strap needed to install or remove piston from fitting set

Bed weight	Pushing force	Item No.
80 kg (176 lbs.)	1500 N	271.99.346
90 kg (198 lbs.)	1700 N	271.99.382
100 kg (220 lbs.)	1900 N	271.99.410

Note
Order gas pistons separately depending on bed weight.
2 pcs. required per bed.

→ Retaining Straps for bedding

> With contact closing

For mattress width	Item No.
Up to 900 (35 7/16")	271.87.920
Up to 1200 (47 1/4")	271.87.921
Up to 1400 (55 1/8")	271.87.922

Supplied With
3 Right straps
3 Left straps

Dimensional data not binding. Dimensions in mm, inches are approximate. We reserve the right to alter specifications without notice.

Häfele Wall Bed

> For vertical folding beds
> Space saving: ideal for lofts, guest beds, home office, etc.
> Available in 3 sizes for mattresses:
  - Single/Twin: 1905 x 991 mm (75" x 39")
  - Double/Full: 1905 x 1372 mm (75" x 54")
  - Queen: 2032 x 1524 mm (80" x 60")
> Sturdy, torsion-free steel frame with concealed gas struts
> Includes integrated folding feet, which automatically extend as bed is opened and retract when closing
> With wood slatted mattress supports mounted in flexible sockets for comfort
> Recommended for relatively light foam mattresses without box springs, 152–254 mm (6"–10") thick
> Includes drilling template for proper alignment and installation of hardware
> Casework to be constructed by end user
> Inside depth of case: 470–600 mm (18 1/2"–23 5/8")

Note
Successful and safe installation of fitting set and construction of casework requires a professional skill level. Casework to be constructed of high quality material (preferably high quality plywood), minimum thickness 19 mm (3/4"). Cabinet must be safely secured against tipping, 2 safety brackets are included.

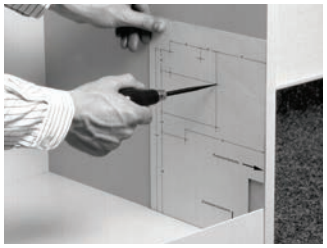

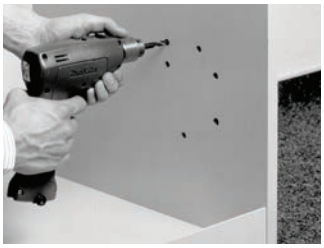

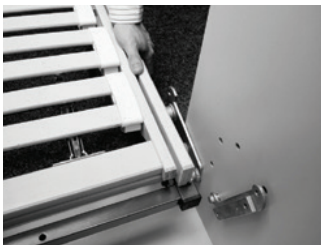

Wall bed installation has never been so easy and safe. Häfele's wall bed system comes complete with pre-mounted fittings and can be installed in 4 easy steps.

1. Mark drilling position on both panels with the aid of the included drilling template.
2. Drill 6 holes in each side panel.
3. Fasten the two support brackets with the screws provided.
4. Slide bed frame onto support brackets, tighten screws, and attach the front panel.

Dimensional data not binding. Dimensions in mm, inches are approximate. We reserve the right to alter specifications without notice.

Häfele Wall Bed

→ Wall Bed

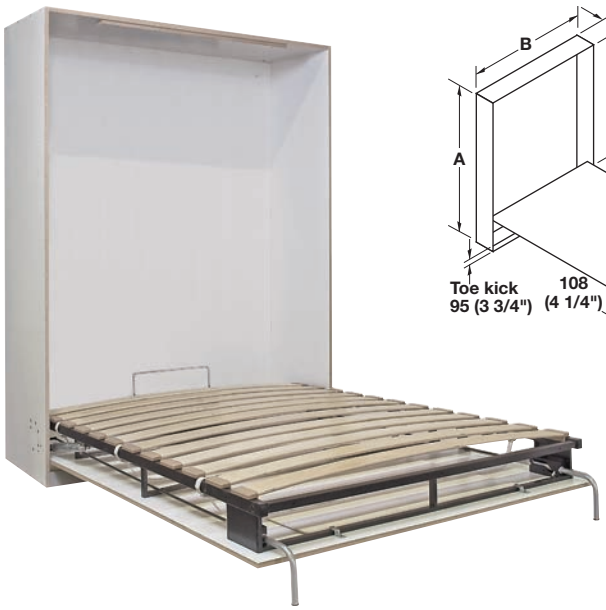

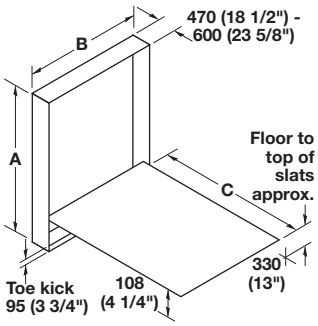

> Material: Steel; Finish: Frame: black epoxy: Feet: silver epoxy: Slats: Laminated Beech; Finish: natural lacquered

Size	Mattress size	Cabinet construction inside dimensions		C-protrusion	Item No.
		A-inside height	B-inside width		
Single/Twin	1905 x 991 (75" x 39")	2018 (79 7/16")	1051 (41 3/8")	1725 (68")	271.92.016
Double/Full	1905 x 1372 (75" x 54")	2018 (79 7/16")	1432 (56 3/8")	1725 (68")	271.92.025
Queen	2032 x 1524 (80" x 60")	2145 (84 7/16")	1584 (62 3/8")	1852 (73")	271.92.132

Supplied With
Complete frame
Mounting brackets and hardware
2 Safety brackets, 3 Bed straps
Mattress retainer
Drilling template

General Weight Parameters

Size	Front panel weight	Mattress weight	Combined lifting capacity
Single/Twin	approx. 27 kg (60 lbs.)	16–22 kg (35–48 lbs.)	43–49 kg (95–108 lbs.)
Double/Full	approx. 38 kg (84 lbs.)	23–31 kg (50–68 lbs.)	61–69 kg (134–152 lbs.)
Queen	approx. 45 kg (100 lbs.)	27–36 kg (60–80 lbs.)	72–81 kg (160–180 lbs.)

Note
Wall bed will not operate properly unless the above weight ranges are adhered to.

→ Additional "Safe" Safety Brackets

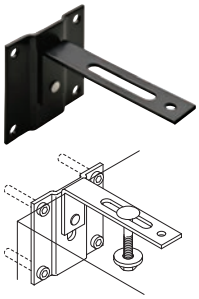

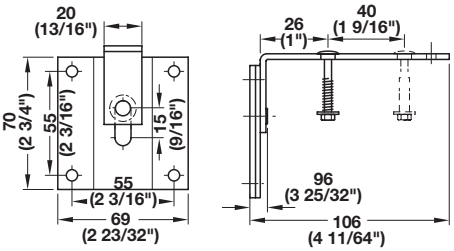

> Secures folding beds to wall
> The special design ensures that force is distributed evenly over all the mounting bolts offering adjustability for alignment
> The swiveling wall plate permits straightforward mounting in any position
> Material: Steel

Color	Item No.
black	271.98.100

Note
To comply with DIN 68 873, foldaway beds must be installed with a minimum of two safety fittings.

Dimensional data not binding. Dimensions in mm, inches are approximate. We reserve the right to alter specifications without notice.

HÄFELE

Wall Bed

> For vertical folding beds
> Space saving: Ideal for lofts, guest beds, home office, etc.
> Fits mattresses up to 254 mm (10") thick
> Optional comfort slat system and cover caps, see next page
> Quick and simple assembly

Note
Successful and safe installation of hardware and construction of casework requires a professional skill level. Casework to be constructed of high quality material with a minimum thickness of 19 mm (3/4"). Cabinet must be safely secured against tipping, three safety brackets are included.

→ Installation

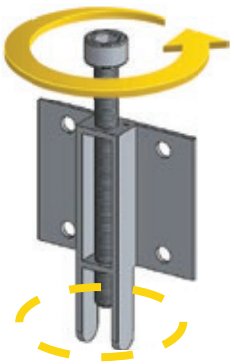

Turn the screw counter clockwise to loosen = **Door will go down**

Turn the screw clockwise to tighten = **Door will go up**

Door brackets attach front panels to support bars for quick and simple installation. Door brackets include height adjustment screws that allow for easy adjustment of front panels.

Note
That ends are rounded so that doors can slide left to right for a better adjustment.

Inside measurements

Size	Width	Depth	Height
Twin	1125 (44 5/16")	368 (14 1/2")	2030 (79 15/16")
Double/Full	1506 (59 5/16")	368 (14 1/2")	2030 (79 15/16")
Queen	1659 (65 5/16")	368 (14 1/2")	2158 (84 15/16")

Outside measurements

Size	Width	Depth	Height
Twin	1163 (45 13/16")	406 (16")	2068 (81 7/16")
Double/Full	1544 (60 13/16")	406 (16")	2068 (81 7/16")
Queen	1697 (66 13/16")	406 (16")	2196 (86 7/16")

Dimensional data not binding. Dimensions in mm, inches are approximate. We reserve the right to alter specifications without notice.

Wall Bed

→ Cabinet Dimensions

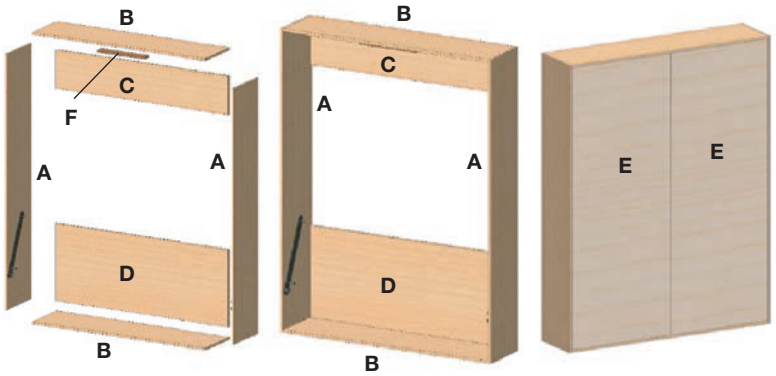

Twin

	Qty.	Width	Length
A	2	406 (16")	2068 (81 7/16")
B	2	406 (16")	1125 (44 5/16")
C	1	330 (13")	1125 (44 5/16")
D	1	660 (26")	1125 (44 5/16")
E	1	1115 (43 7/8")	2013 (79 1/4")
F	1	75 (2 15/16")	455 (17 15/16")

Double/Full

	Qty.	Width	Length
A	2	406 (16")	2068 (81 7/16")
B	2	406 (16")	1506 (59 5/16")
C	1	330 (13")	1506 (59 5/16")
D	1	660 (26")	1506 (59 5/16")
E	2	748 (29 7/16")	2013 (79 1/4")
F	1	75 (2 15/16")	455 (17 15/16")

Queen

	Qty.	Width	Length
A	2	406 (16")	2196 (86 7/16")
B	2	406 (16")	1659 (65 5/16")
C	1	330 (13")	1659 (65 5/16")
D	1	660 (26")	1659 (65 5/16")
E	2	825 (32 1/2")	2141 (84 5/16")
F	1	75 (2 15/16")	455 (17 15/16")

Note
Suggested dimensions for 19 (3/4") material.

Dimensional data not binding. Dimensions in mm, inches are approximate. We reserve the right to alter specifications without notice.

Wall Bed

→ Wall Bed Kit

> Material: Steel; Finish: black

Size	Pistons	Item No.
Twin	1200N	271.92.201
Double/Full	1600N	271.92.202
Queen	1900N	271.92.200

Supplied With
Frame, Safety brackets, 2 Gas pistons, Mounting hardware

→ Comfort Slat System

> Easy to install
> Increases comfort
> Flexible curved slats
> Material: Steel/Plywood; Finish: black

Size	Item No.
Twin	271.92.261
Double/Full	271.92.262
Queen	271.92.260

→ Cover Cap

> Conceals mounting plates and pistons
> Two-piece cap is quick and easy to install
> Material: Steel

Finish	Item No.
black	271.92.250

→ General Weight Parameters

Size	Front panel weight	Mattress weight	Comfort slat system or plywood Sheet	Combined lifting capacity
Twin	27 kg (60 lbs.)	14–23 kg (30–50 lbs.)	9–11 kg (20–25 lbs.)	50–61 kg (110–135 lbs.)
Double/Full	36 kg (80 lbs.)	30–25 kg (55–80 lbs.)	14–16 kg (30–35 lbs.)	75–89 kg (165–195 lbs.)
Queen	45 kg (100 lbs.)	29–39 kg (65–85 lbs.)	14–16 kg (30–35 lbs.)	89–98 kg (195–220 lbs.)

Note Wall bed will not operate properly unless the above weight ranges are adhered to.

→ Gas Pistons

> Available if lighter or heavier mattress or front panels are being used

Pistons strength (N)	Average front panel	Mattress	Comfort slat kit or plywood sheet	Combined lifting capacity	Item No.
1200	30 kg (65 lbs.)	14–20 kg (30–45 lbs.)	9–11 kg (20–25 lbs.)	50–59 kg (110–130 lbs.)	271.92.265
1300	32 kg (70 lbs.)	16–23 kg (35–50 lbs.)	9–11 kg (20–25 lbs.)	56–64 kg (125–140 lbs.)	271.92.266
1400	34 kg (75 lbs.)	18–25 kg (40–55 lbs.)	9–11 kg (20–25 lbs.)	61–68 kg (135–150 lbs.)	271.92.267
1500	34 kg (75 lbs.)	25–32 kg (55–70 lbs.)	13–16 kg (30–35 lbs.)	66–73 kg (145–160 lbs.)	271.92.268
1600	36 kg (80 lbs.)	30–36 kg (65–80 lbs.)	13–16 kg (30–35 lbs.)	70–77 kg (155–170 lbs.)	271.92.269
1700	39 kg (85 lbs.)	25–34 kg (55–75 lbs.)	13–16 kg (30–35 lbs.)	75–84 kg (165–185 lbs.)	271.92.270
1800	43 kg (95 lbs.)	27–36 kg (60–80 lbs.)	13–16 kg (30–35 lbs.)	82–88 kg (180–195 lbs.)	271.92.271
1900	45 kg (100 lbs.)	29–38 kg (65–85 lbs.)	13–16 kg (30–35 lbs.)	88–100 kg (195–220 lbs.)	271.92.272
2000	45 kg (100 lbs.)	34–43 kg (75–95 lbs.)	13–16 kg (30–35 lbs.)	93–104 kg (205–230 lbs.)	271.92.273
2100	45 kg (100 lbs.)	39–48 kg (85–105 lbs.)	13–16 kg (30–35 lbs.)	98–107 kg (215–235 lbs.)	271.92.274
2200	45 kg (100 lbs.)	43–52 kg (95–115 lbs.)	13–16 kg (30–35 lbs.)	102–113 kg (225–250 lbs.)	271.92.275

Dimensional data not binding. Dimensions in mm, inches are approximate. We reserve the right to alter specifications without notice.

Wall Bed

→ Extended Leg for Wall Bed

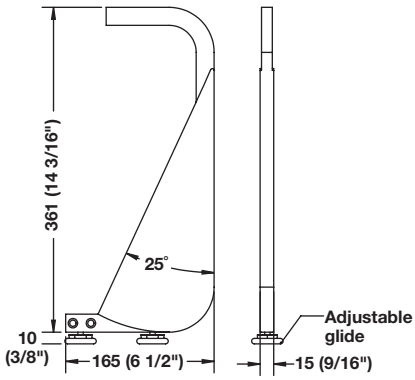

> To be used on the wall beds on page 4.8B
> For wall beds that have bases or toe kicks
> Allows for mattresses up to 304 mm (12") thick
> Adjustable glide provides 12 mm (1/2") height adjustment
> Height: 361 mm (14 3/16")
> Material: Steel; Finish: black

	Item No.
	271.92.290

Note
When using the extended leg, refer to the cabinet dimensions below.

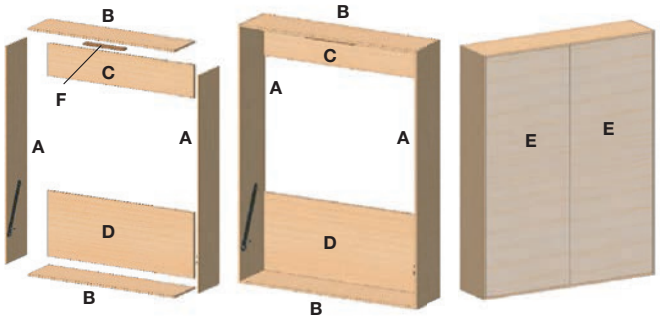

Cabinet Dimensions

Inside measurements

Size	Width	Depth	Height
Twin	1125 (44 5/16")	429 (16 7/8")	2091 (82 5/16")
Double/Full	1506 (59 5/16")	429 (16 7/8")	2091 (82 5/16")
Queen	1659 (65 5/16")	429 (16 7/8")	2219 (87 3/8")

Outside measurements

Size	Width	Depth	Height
Twin	1163 (45 13/16")	467 (18 3/8")	2129 (83 13/16")
Double/Full	1544 (60 13/16")	467 (18 3/8")	2129 (83 13/16")
Queen	1697 (66 13/16")	467 (18 3/8")	2257 (88 7/8")

Cabinet Dimensions

Twin

	Qty.	Without toe kick width	With toe kick width	Without toe kick length	With toe kick length
A	2	467 (18 3/8")	467 (18 3/8")	2129 (83 13/16")	2129 (83 13/16")
B - top	2	467 (18 3/8")	467 (18 3/8")	1125 (44 5/16")	1125 (44 5/16")
B - bottom	2	–	448 (17 5/8")	–	1125 (44 5/16")
C	1	330 (13")	330 (13")	1125 (44 5/16")	1125 (44 5/16")
D	1	660 (26")	660 (26")	1125 (44 5/16")	1125 (44 5/16")
E	1	1115 (43 7/8")	1115 (43 7/8")	2074 (81 5/8")	2013 (79 1/4")
F	1	75 (2 15/16")	75 (2 15/16")	455 (17 15/16")	455 (17 15/16")
Toe kick	1	–	61 (2 7/16")	–	1125 (44 5/16")

Full/Double

	Qty.	Without toe kick width	With toe kick width	Without toe kick length	With toe kick length
A	2	467 (18 3/8")	467 (18 3/8")	2129 (83 13/16")	2129 (83 13/16")
B - top	2	467 (18 3/8")	467 (18 3/8")	1506 (59 5/16")	1506 (59 5/16")
B - bottom	2	–	448 (17 5/8")	–	1506 (59 5/16")
C	1	330 (13")	330 (13")	1506 (59 5/16")	1506 (59 5/16")
D	1	660 (26")	660 (26")	1506 (59 5/16")	1506 (59 5/16")
E	2	748 (29 7/16")	748 (29 7/16")	2074 (81 5/8")	2013 (79 1/4")
F	1	75 (2 15/16")	75 (2 15/16")	455 (17 15/16")	455 (17 15/16")
Toe kick	1	–	61 (2 7/16")	–	1506 (59 5/16")

Queen

	Qty.	Without toe kick width	With toe kick width	Without toe kick length	With toe kick length
A	2	467 (18 3/8")	467 (18 3/8")	2257 (88 7/8")	2257 (88 7/8")
B - top	2	467 (18 3/8")	467 (18 3/8")	1659 (65 5/16")	1659 (65 5/16")
B - bottom	2	–	448 (17 5/8")	–	1659 (65 5/16")
C	1	330 (13")	330 (13")	1659 (65 5/16")	1659 (65 5/16")
D	1	660 (26")	660 (26")	1659 (65 5/16")	1659 (65 5/16")
E	2	825 (32 1/2")	825 (32 1/2")	2202 (86 11/16")	2141 (84 5/16")
F	1	75 (2 15/16")	75 (2 15/16")	455 (17 15/16")	455 (17 15/16")
Toe kick	1	–	61 (2 7/16")	–	1659 (65 5/16")

Dimensional data not binding. Dimensions in mm, inches are approximate. We reserve the right to alter specifications without notice.

Custom Library Ladders

Dimensional data not binding. Dimensions in mm, inches are approximate. We reserve the right to alter specifications without notice.

Custom Library Ladders

> Our custom ladders are built strong and add beauty, style and functionality to any room
> Library ladders are not only for libraries; they are also great for closets, kitchens and wine rooms
> Wood library ladders are assembled with steel rods and plated steel braces for maximum comfort and strength; all ladders incorporate a blind mounted grab bar on the top rung and a reinforced, oversize bottom step for additional strength and safety
> Track Ø: 32 mm (1 1/4")
> Weight capacity: 114 kg (250 lbs.) per ladder
> Ladder weight (based on height): Wood: 2.13 kg (4.7 lbs.) per foot
Aluminum: 1.6 kg (3.6 lbs.) per foot

Note
Visit www.hafele.com/us – Services, Häfele to Order, Custom Library Ladders.

→ Ladder Material Options

> Ladders are available in natural hardwood or powder-coated aluminum

→ Powder-Coated Aluminum

Matte Black **Gloss Black** **Beige Metallic**
Matte White **Gloss White**

→ Ladder Options

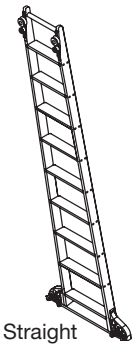
Straight

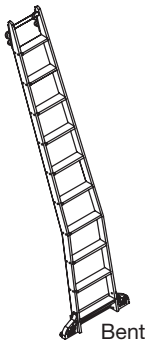
Bent

→ Natural Hardwood

Birch

Cherry

Mahogany

Maple

White Oak

Red Oak

Walnut

Alder

→ Wheel Housing Options

Contemporary

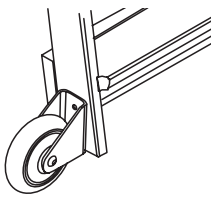

Sunburst

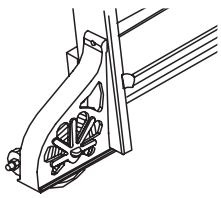

→ Upper Assembly Options

Roller Assembly
for affixed rolling ladder

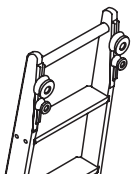

Hook Assembly
for a removable ladder

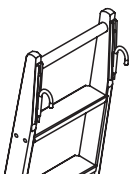

→ Hardware Options

> A variety of hardware finishes are available to complement any ladder style
> All hardware, including wheel housing, upper roller assembly, handrails, track, brackets, braces and bolts will be in the selected finish

→ Plated Hardware Finishes

Chrome **Nickel** **Copper**
Brass **Bronze**

→ Powder-Coated Hardware Finishes

Matte Black **Gloss Black** **Beige Metallic**
Matte White **Gloss White** **Silver Gray**

Dimensional data not binding. Dimensions in mm, inches are approximate. We reserve the right to alter specifications without notice.

EcoDomo Leather Components

→ Andeline Collection - Texture and Colors

Bianco

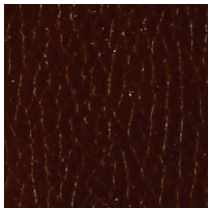

Mahogany

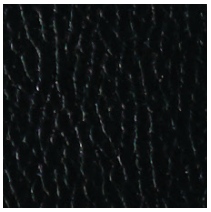

Coal

Paloma Gray

Antique Grey

Antique Black

Walrus
Adds a rich, nuanced and muddled look to an island, cabinet or piece of furniture. Stained with traditional leather techniques by American artisans.

Note
Visit www.hafele.com/us – Services, Häfele to Order,EcoDomo Leather.

Bianco

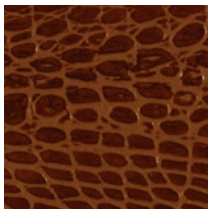

Mahogany

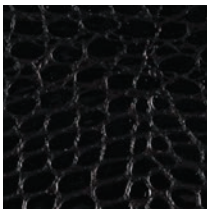

Coal

Paloma Grey

Antique Grey

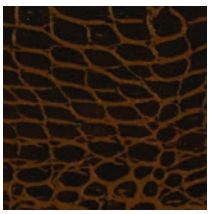

Antique Black

Crocodile
This luxurious pattern is directional and comes standard with a synchronized, cohesive motif across all drawers, shelves and doors. You'll love how the sequence matched grain flows throughout the design.

Note
Visit www.hafele.com/us – Services, Häfele to Order, EcoDomo Leather.

Dimensional data not binding. Dimensions in mm, inches are approximate. We reserve the right to alter specifications without notice.

EcoDomo Leather Components

→ Countertops

Top

Bottom

> Thickness: 28 or 56 mm (1 1/8" or 2 3/16")
> Maximum size: 1118 x 2388 mm (44" x 94")
> Leather is wrapped on the front and sides and continues 51 mm (2") on the back
> Larger sizes are available, but will have seams
> Particle board core

Note
Waterfall design available on special request.

→ Doors

Back

Front

Back

Front

> Thickness: 19 mm (3/4")
> Maximum size: 1118 x 2438 mm (44" x 96")
> MDF core
> Choice of options: Infinity style: Leather is wrapped on all six sides for seamless beauty from every perspective
> Penta style: Leather on five sides with a coordinating melamine back

Dimensional data not binding. Dimensions in mm, inches are approximate. We reserve the right to alter specifications without notice.

EcoDomo Leather Components

→ Drawer Fronts

> Thickness: 19 mm (3/4")
> MDF core
> Options:

Infinity style:	Leather is wrapped on all six sides for seamless beauty from every perspective. Maximum size: 1118 x 2438 mm (44" x 96")
Penta style:	Leather on five sides with a coordinating melamine back. Maximum size: 1118 x 2438 mm (44" x 96")
Kensington style:	Leather is wrapped on the front and sides, and continues 51 mm (2") onto the back leaving exposed MDF. Designed for five-sided drawers where the back of the drawer front is not visible. Maximum size: 660 x 2438 mm (26" x 96")

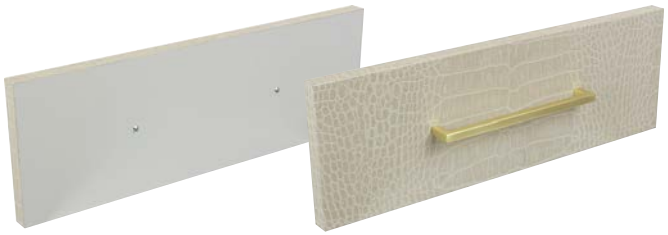

→ Insert Panels

> Thickness: 4 mm (3/16") or 6 mm (1/4")
> Maximum size: 1219 x 2438 mm (48" x 96")
> MDF core
> Leather is wrapped on the front and the back

→ Drawer Liners

> Thickness: 2 mm (3/32")
> Maximum size: 1219 x 2438 mm (48" x 96")
> Phenolic core: 1 mm (1/16")
> Top of leather liner: 1 mm (1/16")

→ Shelves

> Thickness: 19 mm (3/4") (MDF) or 28 mm (1 1/8") (particle board)
> Maximum size: 660 x 2438 mm (24" x 96")
> Leather is wrapped on the top, bottom and front

Dimensional data not binding. Dimensions in mm, inches are approximate. We reserve the right to alter specifications without notice.

Inception Vinyl Components

> The look of leather without the cost
> Strong resistance to wear, stains and abrasion
> Easy maintenance with most standard household cleaners

Note
Visit www.hafele.com/us - Services, Häfele to Order, Inception Vinyl.

→ Arcadia Collection - Texture and Colors

Brick

Egg Shell

Gingerbread

Hickory

Honey Cake

Linen

Raven

Timeless Grey

→ Biscayne Collection - Texture and Colors

Alabaster

Copper Illusion

Galena

Graphite

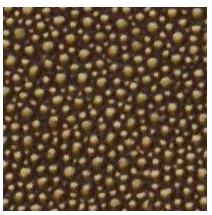
Inkwell

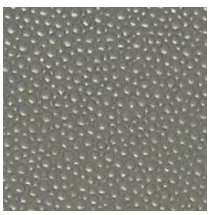
Nacre

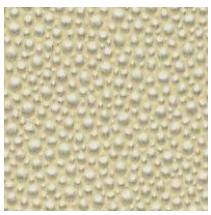
Steel

Tawny

Dimensional data not binding. Dimensions in mm, inches are approximate. We reserve the right to alter specifications without notice.

Inception Vinyl Components

→ Countertops

Top

Bottom

> Thickness: 28 mm (1 1/8")
> Maximum size: 1219 x 3658 mm (48" x 144")
> Vinyl is wrapped on the front and sides and continues 51 mm (2") on the back
> Larger sizes are available, but will have seams
> Particle board core

Note
Waterfall design available on special request.

→ Doors

> Thickness: 19 mm (3/4")
> Maximum size: 1168 x 2438 mm (46" x 96")
> MDF core
> Kensington Style: Vinyl is wrapped on five sides; includes a backside panel overlay

Dimensional data not binding. Dimensions in mm, inches are approximate. We reserve the right to alter specifications without notice.

Inception Vinyl Components

→ Drawer Fronts

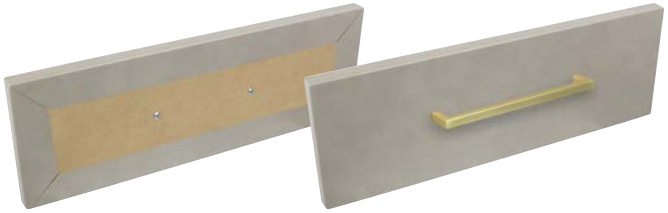

> Thickness: 19 mm (3/4") thickness
> Maximum size: 660 x 2438 mm (26" x 96")
> MDF core
> Kensington Style: Vinyl is wrapped on the front and sides, and continues 51 mm (2") onto the back leaving exposed MDF.
Designed for five-sided drawers where the back of the drawer front is not visible.

→ Shelves

> Thickness: 19 mm (3/4") (MDF) or 28 mm (1 1/8") (particle board)
> Maximum size: 610 x 2438 mm (24" x 96")
> Vinyl is wrapped on the top, bottom and front

→ Insert Panels

> Thickness: 4 mm (5/32") or 6 mm (1/4")
> Maximum size: 1219 x 2438 mm (48" x 96")
> MDF core
> Vinyl is wrapped on the front and back

→ Drawer Liners

> Thickness: 2 mm (3/32")
> Maximum size: 1219 x 2438 mm (48" x 96")
> Phenolic core: 1 mm (1/16")
> Top of leather liner: 1 mm (1/16")

Dimensional data not binding. Dimensions in mm, inches are approximate. We reserve the right to alter specifications without notice.

HÄFELE

TAG Omni Track® Ready Pack Kits

→ Track Kits

Track Length	Item No.
1219 (48")	792.00.001

Supplied With	Item No.	Qty.
Wall Track	792.00.000	4 pcs.
Plastic Edge Profile	792.00.320	8 pcs.
Truss Head Screw #10 X 2 1/2"	792.01.993	100 pcs.
Track Joiners	792.00.310	4 pcs.

Note
Accessories sold separately, not included in kits.

Track Length	Item No.
2464 (97")	792.00.002

Supplied With	Item No.	Qty.
Wall Track	792.00.000	2 pcs.
Plastic Edge Profile	792.00.320	8 pcs.
Truss Head Screw #10 X 2 1/2"	792.01.993	100 pcs.

Note
Accessories sold separately, not included in kits.

→ Work/Craft Bench Kit

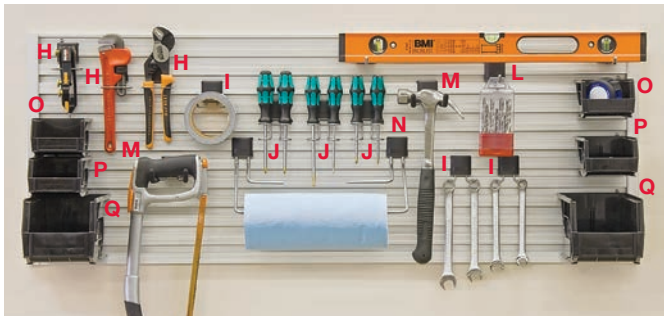

Item No.
792.02.240

Supplied With	Item No.	Qty.
(H) Plier Hook	792.02.250	3 pcs.
(I) Wrench Hook	792.02.251	3 pcs.
(J) Screwdriver Hook	792.02.252	3 pcs.
(L) Single Hooks	792.02.253	3 pcs.
(N) Paper Organizer Set	792.02.254	1 pc.
(M) Hand Tool Hook	792.02.255	2 pcs.
Cover Caps for Small Hooks	792.02.399	17 pcs.
(O) Small Storage Bin	792.02.380	2 pcs.
(P) Medium Storage Bin	792.02.381	2 pcs.
(Q) Large Storage Bin	792.02.382	2 pcs

Note
Choose track kit above, sold separately.
Aluminum edge profile and application tape are included.

Dimensional data not binding. Dimensions in mm, inches are approximate. We reserve the right to alter specifications without notice.

TAG Omni Track® Ready Pack Kits

→ Lawn/Garden Bench Kit

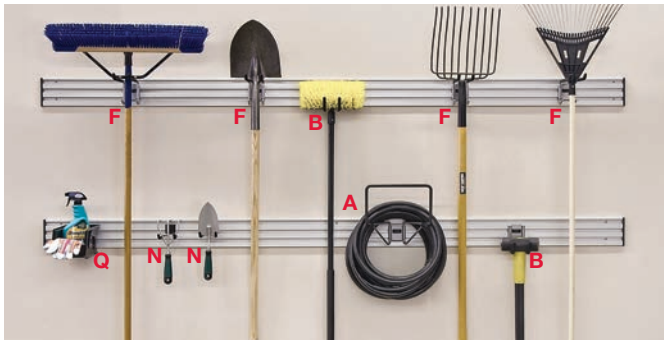

Item No.
792.02.241

Supplied With	Item No.	Qty.
(F) Heavy Duty Garden Tool Hook	792.02.200	4 pcs.
(A) Heavy Duty Hose Hook	792.02.202	1 pc.
(B) Heavy Duty Utility Hook	792.02.203	2 pcs.
Cover Caps for Large Hooks	792.02.349	10 pcs.
(N) Hand Tool Hook	792.02.255	2 pcs.
Cover Caps for Small Hooks	792.02.399	2 pcs.
(Q) Large Storage Bin	792.02.382	1 pc.

Note
Choose track kit on page **4.18**.

→ Sports Kit

Item No.
792.02.000

Supplied With	Item No.	Qty.
(C) Heavy Duty Activity Hook	792.02.004	2 pcs.
(D) Heavy Duty 16" Utility Hook	792.02.005	1 pc.
(G) Heavy Duty Bike Hook	792.02.201	2 pcs.
(B) Heavy Duty Utility Hook	792.02.203	2 pcs.
Cover Caps for Large Hooks	792.02.349	10 pcs.
(Q) Large Storage Bin	792.02.382	2 pcs.

Note
Choose track kit on page **4.18**.

Dimensional data not binding. Dimensions in mm, inches are approximate. We reserve the right to alter specifications without notice.

TAG Omni Track®

> For organization of hooks, bins, and baskets for garages, craft rooms, laundry rooms, etc.
> Can be used singly or configured into a panel by seamlessly overlapping the tracks above one another

→ Wall Track

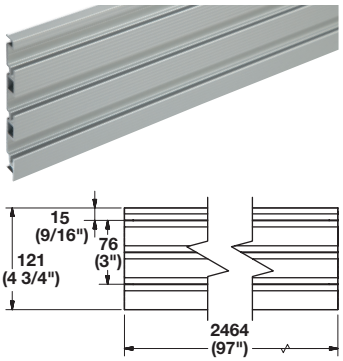

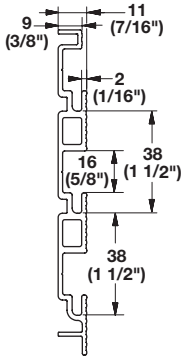

> Cut with a circular saw with a non-ferrous blade
> Attach tracks to studs in drywall with pan head screws, see next page
> W x D X H: 2464 x 11 x 121 mm (97" x 1/2" x 4 3/4")
> Material: Aluminum

Finish	Item No.
matt aluminum	792.00.000

→ Aluminum Edge Profile

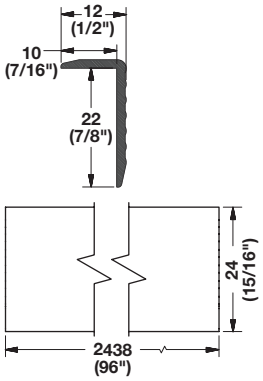

> Covers the ends of the wall track for a finished look
> Attaches to the wall track with mounting tape, see next page
> Cut with a circular saw with a non-ferrous blade
> W x H: 24 x 2438 mm (15/16" x 96")
> Material: Aluminum

Finish	Item No.
matt aluminum	792.01.000

→ Plastic End Caps

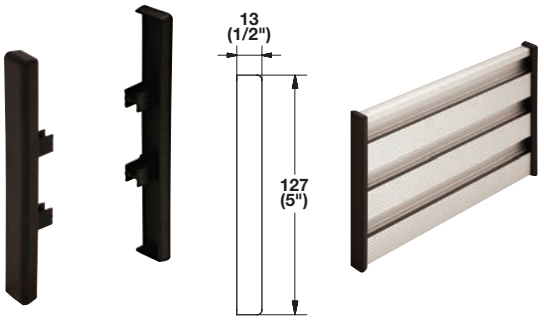

> Covers the ends of wall track for a finished look
> Cannot be used on tracks that overlap above or below each other
> Mounts to the wall track with attached dowels that slide into the end of the track
> W X H: 13 x 127 mm (5" x 1/2")
> Material: Plastic

Color	Item No.
black	792.00.320

Supplied With
1 Right profile
1 Left profile

Dimensional data not binding. Dimensions in mm, inches are approximate. We reserve the right to alter specifications without notice.

TAG Omni Track®

→ Pan Head Screw

> Self-tapping #10 x 2"
> Square drive
> Material: Steel

	Item No.
	792.01.993

Supplied With
25 pcs.

→ Screw Cover Caps

> Material: Plastic

Color	Item No.
silver	045.06.909

Supplied With
100 pcs.

→ Mounting Tape

> Attaches the aluminum edge profile to the wall track
> Cures in 72 hours at 68–72°
> W x L: 12 mm x 33 m (1/2" x 108')
> Material: Acrylic

	Item No.
	792.01.994

Dimensional data not binding. Dimensions in mm, inches are approximate. We reserve the right to alter specifications without notice.

TAG Omni Track®

→ Track Joiner

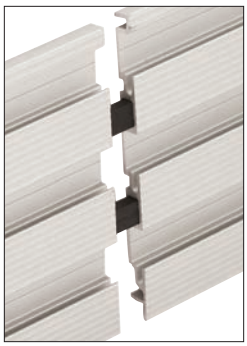

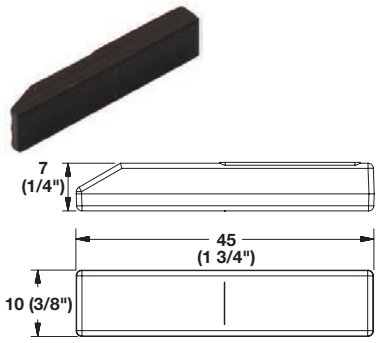

> Connects and aligns two pieces of wall track together horizontally
> Insert two connectors into the square holes on the end of one track and slide the two tracks together
> Material: Plastic

Color	Item No.
black	792.00.310

→ Shelf Stiffener

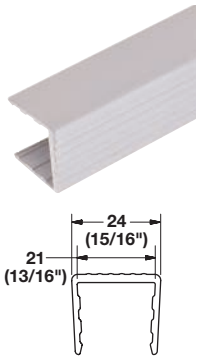

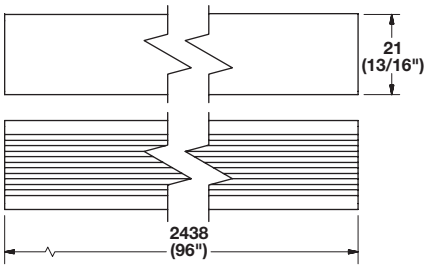

> Applies to the edge of 19 mm (3/4") panel for added strength and protection of edges
> Attaches to the panel by tapping on with a rubber mallet
> Length: 2438 mm (96")
> Material: Aluminum

Finish	Item No.
matt aluminum	792.01.030

→ Extruded Handle

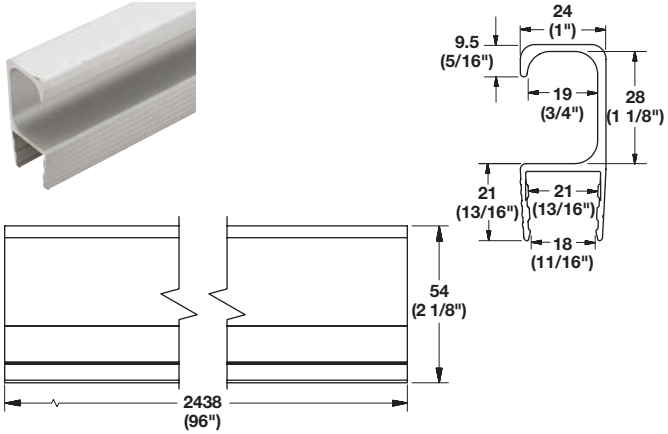

> Applies to the edge of a 19 mm (3/4") door
> Attaches to the panel by tapping on with a rubber mallet
> Length: 2438 mm (96")
> Material: Aluminum

Finish	Item No.
matt aluminum	792.01.060

→ Bar Handle

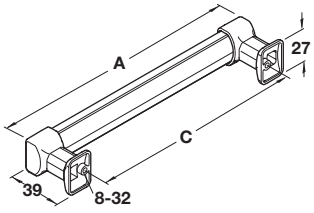

> Material: Center: Aluminum, matt; Ends: Zinc; Color: black

A	C	Item No.
188 (7 7/16")	160 (6 5/16")	111.95.063
412 (16 1/4")	384 (15 1/8")	111.95.069

8-32 screws page 12.17

Dimensional data not binding. Dimensions in mm, inches are approximate. We reserve the right to alter specifications without notice.

TAG Omni Track® Closet

> Hooks are used with wall track 792.00.000
> Material: Steel; Finish: matt aluminum

Note
Silver cover cap 792.02.099 sold separately, see next page.

→ Tie Hook

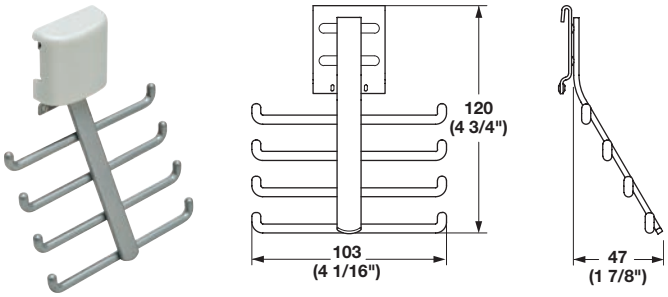

> Storage for 8 ties

	Item No.
	792.03.900

→ Belt Hook

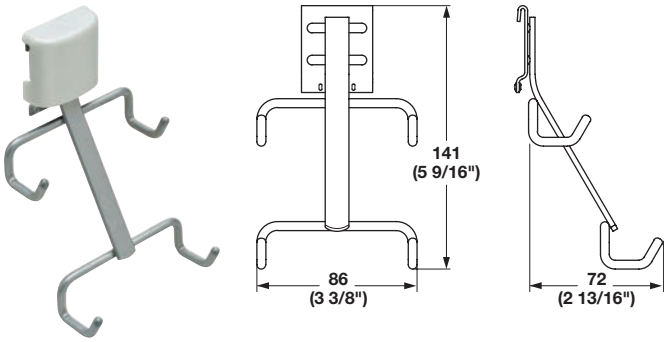

> Storage for 4 belts or jewelry

	Item No.
	792.03.910

→ Double Hook

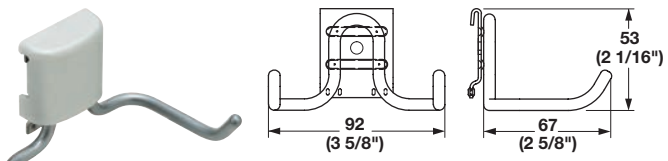

> Storage for jewelry, hats, ironing boards and other general uses

	Item No.
	792.03.920

→ Coat Hook

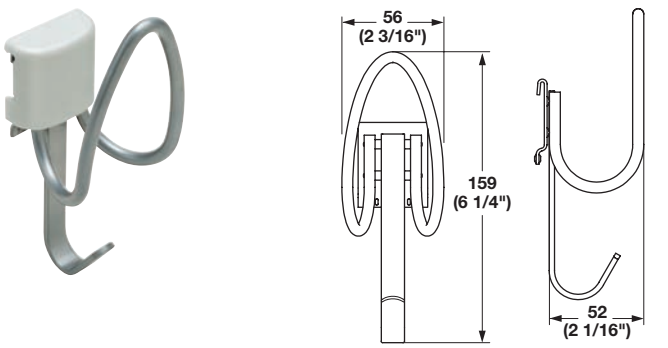

> With rounded top

	Item No.
	792.03.930

Wall track	page 4.20
Cover cap	page 4.24

Dimensional data not binding. Dimensions in mm, inches are approximate. We reserve the right to alter specifications without notice.

TAG Omni Track® Closet

> Hooks are used with wall track 792.00.000

Note
Silver cover cap 792.02.099 sold separately, below

→ Bracelet Hook

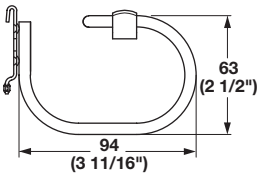

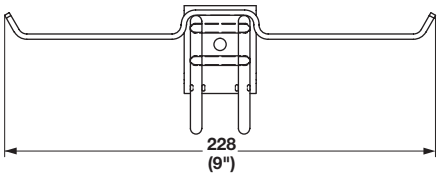

> For storing bracelets, necklaces and other jewelry
> Material: Steel

Finish	Item No.
matt aluminum	792.03.940

→ Valet Hook

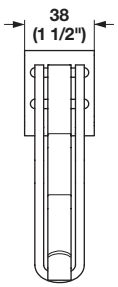

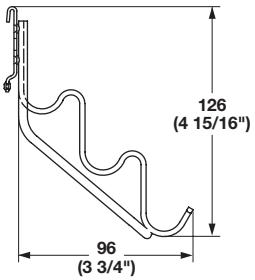

> For storing clothes on hangers
> Material: Steel

Finish	Item No.
matt aluminum	792.03.950

→ Cover Cap

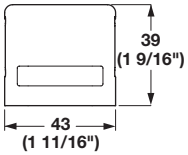

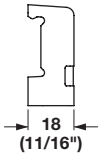

> Material: Plastic

Finish	Item No.
silver	792.02.099

Wall track page 4.20

Dimensional data not binding. Dimensions in mm, inches are approximate. We reserve the right to alter specifications without notice.

TAG Omni Track® Office

> Items are used with wall track 792.00.000
> Material: Steel; Finish: silver

→ Paper Tray

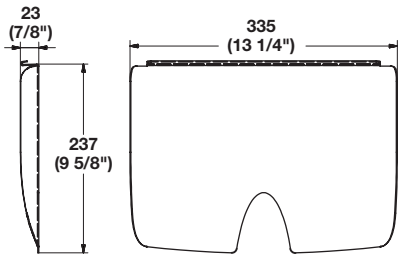

> For 8 1/2" x 11" letter size paper

Item No.
818.83.910

→ Pencil Tray

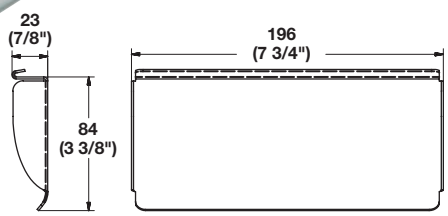

> For pencils, pens and other small items

Item No.
818.83.920

→ Small Tray

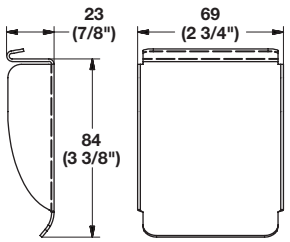

> For paper clips and other small items

Item No.
818.83.930

Wall track page 4.20

Dimensional data not binding. Dimensions in mm, inches are approximate. We reserve the right to alter specifications without notice.

TAG Omni Track® Office

> Items are used with wall track 792.00.000

→ Upright Tray

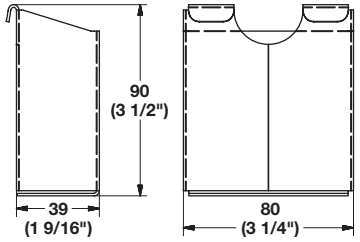

> For pens, pencils and other small items
> Material: Steel

Finish	Item No.
silver	818.83.940

→ File Hanger

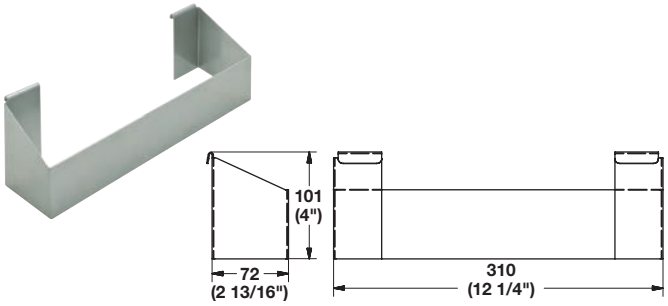

> For 8 1/2" x 11" letter size hanging file folders
> A second file hanger can be added on the front for more storage
> Material: Steel

Finish	Item No.
silver	818.83.900

→ J Channel

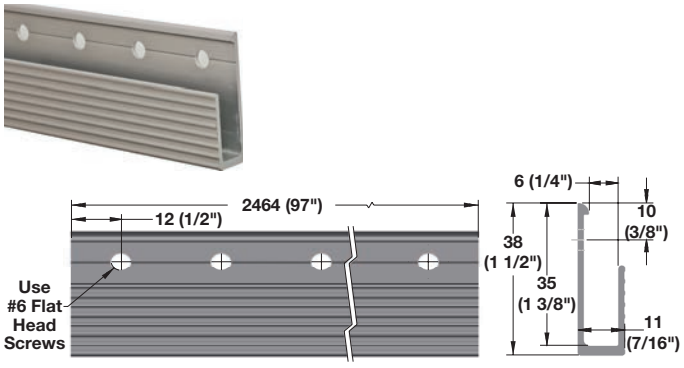

> Allows Omni Track to be used to create a unique cork board or white board solution
> L x W x H: 2464 x 11 x 38 mm (97" x 7/16" x 1 1/2")
> Material: Aluminum

Finish	Item No.
aluminum matt	792.01.045

Wall track page 4.20

Dimensional data not binding. Dimensions in mm, inches are approximate. We reserve the right to alter specifications without notice.

TAG Omni Track®

> Hooks are used with wall track 792.00.000
> Cover cap 792.02.349 sold separately, secures the hook to the wall track allowing the hooks to be repositioned horizontally and covers the hole in the base plate
> Hooks have a rubber non-slip protective coating
> Material: Steel, rubber-coated; Finish: matt aluminum/black

→ Utility Hook

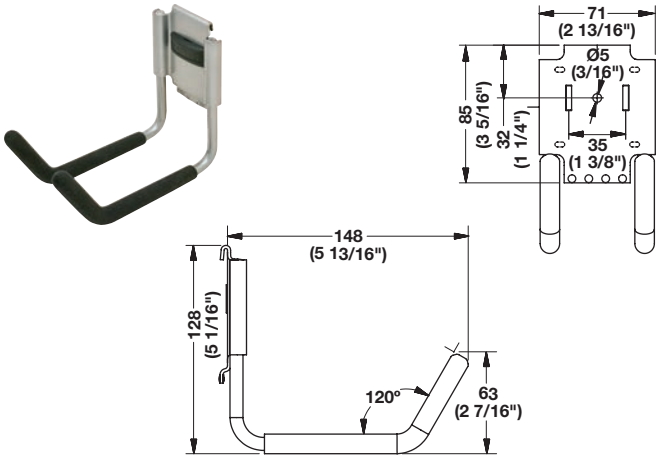

> Heavy duty, for general use
> L x W x H: 148 x 71 x 128 mm (5 13/16" x 2 13/16" x 5 1/16")
> Weight capacity: 11 kg (25 lbs.)

	Item No.
	792.02.203

→ Garden Tool Hook

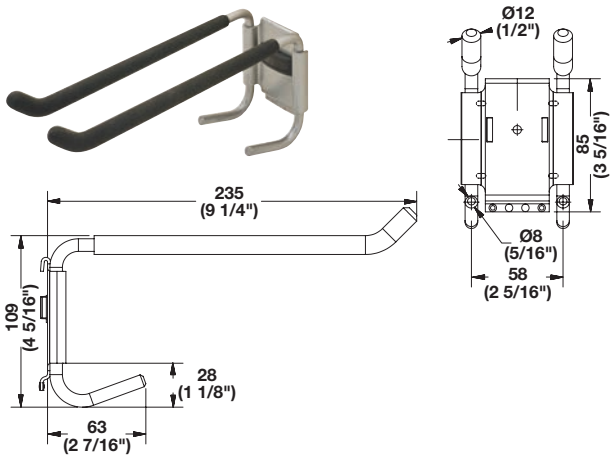

> Heavy duty, holds multiple long handle garden tools
> L x W x H: 235 x 58 x 109 mm (9 1/4" x 2 5/16" x 4 5/16")
> Weight capacity: 11 kg (25 lbs.)

	Item No.
	792.02.200

→ Hose Hook

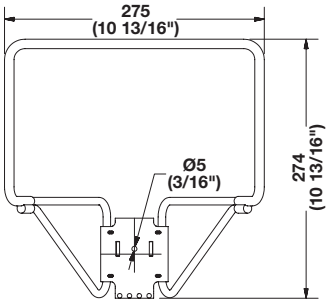

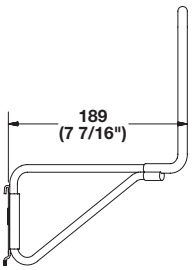

> Heavy duty, stores garden hoses, ropes and extension cords
> L x W x H: 189 x 275 x 274 mm (7 7/16" x 10 13/16" x 10 13/16")
> Weight capacity: 22 kg (50 lbs.)

	Item No.
	792.02.202

Wall track	page 4.20
Cover cap	page 4.30

Dimensional data not binding. Dimensions in mm, inches are approximate. We reserve the right to alter specifications without notice.

TAG Omni Track®

> Hooks are used with wall track 792.00.000
> Cover cap 792.02.349 sold separately, secures the hook to the wall track allowing the hooks to be repositioned horizontally and covers the hole in the base plate
> Hooks have a rubber non-slip protective coating
> Material: Steel, rubber-coated; Finish: matt aluminum/black

→ 16" Utility Hook

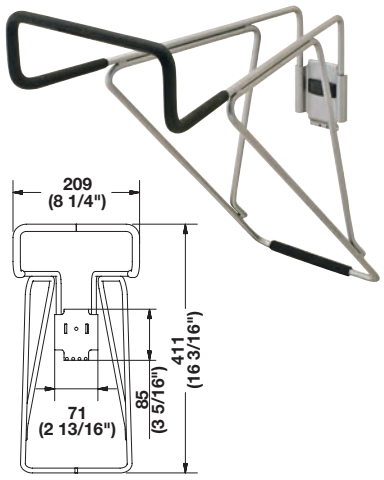

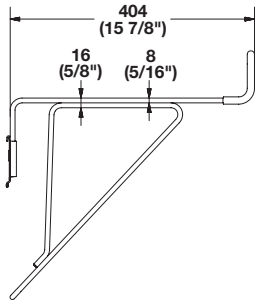

> Heavy duty, horizontal storage for bikes
> Use two hooks for long items
> L x W x H: 404 x 209 x 411 mm (15 7/8" x 8 1/4" x 16 3/16")
> Weight capacity: 22 kg (50 lbs.)

	Item No.
	792.02.005

→ 14" Utility Hook

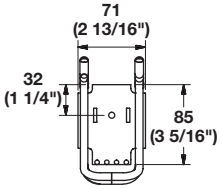

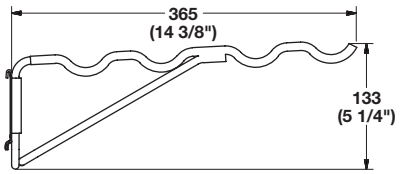

> Heavy duty, horizontal storage for multiple, long handled garden tools and bikes, beach chairs and coolers
> L x W x H: 365 x 71 x 133 mm (14 3/8" x 2 13/16" x 5 1/4")
> Weight capacity: 22 kg (50 lbs.)

	Item No.
	792.02.070

Wall track	page 4.20
Cover cap	page 4.30

Dimensional data not binding. Dimensions in mm, inches are approximate. We reserve the right to alter specifications without notice.

TAG Omni Track®

> Hooks are used with wall track 792.00.000
> Cover cap 792.02.349 sold separately, secures the hook to the wall track allowing the hooks to be repositioned horizontally and covers the hole in the base plate
> Hooks have a rubber non-slip protective coating
> Material: Steel, rubber-coated; Finish: matt aluminum/black

→ Activity Hook

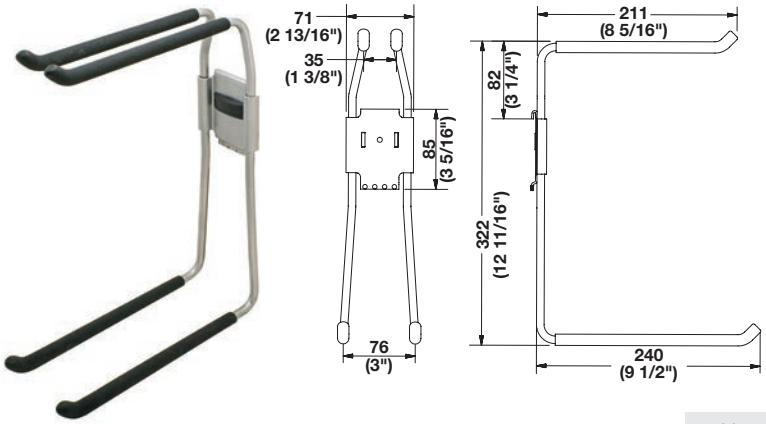

> Heavy duty, stores skis, snowboards, baseball bats, lacrosse sticks, rackets, etc.
> L x W x H: 240 x 76 x 322 mm (9 1/2" x 3" x 12 11/16")
> Weight capacity: 11 kg (25 lbs.)

	Item No.
	792.02.004

→ 16" Bike Hook

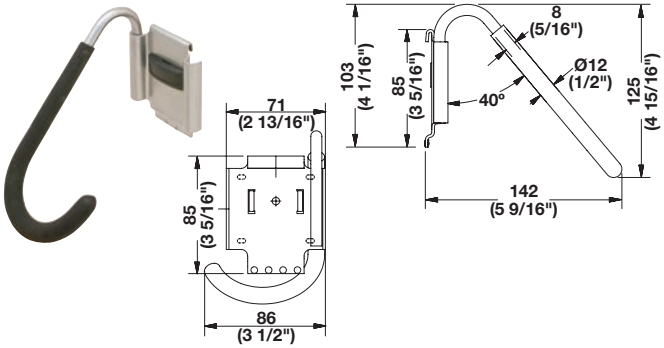

> Heavy duty, for vertical storage of one bike, golf bags, leaf blowers, etc.
> L x W x H: 142 x 86 x 125 mm (5 9/16" x 3 1/2" x 4 15/16")
> Weight capacity: 18 kg (40 lbs.)

	Item No.
	792.02.201

Wall track	page 4.20
Cover cap	page 4.30

Dimensional data not binding. Dimensions in mm, inches are approximate. We reserve the right to alter specifications without notice.

HÄFELE

TAG Omni Track®

> Hooks are used with wall track 792.00.000
> Cover cap 792.02.349 sold separately, secures the hook to the wall track allowing the hooks to be repositioned horizontally and covers the hole in the base plate
> Hooks have a rubber non-slip protective coating

→ Fishing Rod Hook

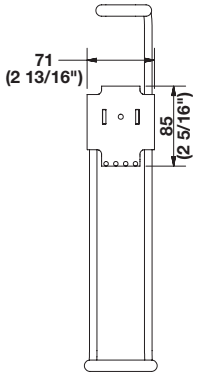

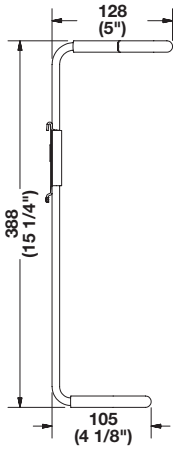

> For vertical storage of one fishing rod
> L x W x H: 128 x 71 x 388 mm (5" x 2 13/16" x 15 1/4")
> Weight capacity: 11 kg (25 lbs.)
> Material: Steel, rubber-coated

Finish	Item No.
matt aluminum/black	792.02.006

→ Cover Cap

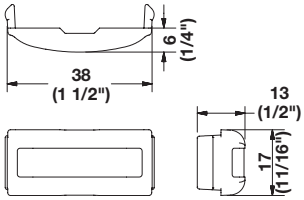

> For heavy duty hooks, garden hook, bike hook, hose hook, utility hook, activity hook, 16" utility hook, fishing rod hook and small shelf bracket
> Material: Plastic

Color	Item No.
black	792.02.349

Wall track page 4.20

Dimensional data not binding. Dimensions in mm, inches are approximate. We reserve the right to alter specifications without notice.

TAG Omni Track®

> Hooks are used with wall track 792.00.000
> Cover cap, 792.02.399, sold separately, secures the hook to the wall track allowing the hooks to be repositioned horizontally
> Hand tool hook has a rubber non-slip protective coating

→ Hand Tool Hook

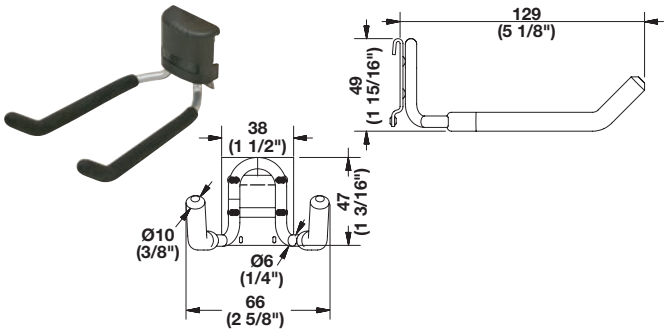

> Organizes hammers and other small hand tools
> L x W x H: 129 x 66 x 49 mm (5 1/8" x 2 5/8" x 1 15/16")
> Material: Steel, rubber-coated

Finish	Item No.
matt aluminum/black	792.02.255

→ Screwdriver Hook

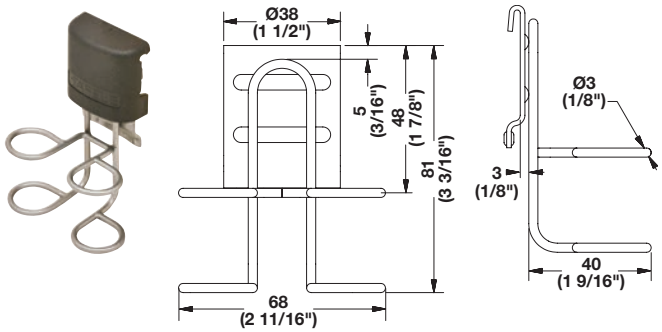

> Organizes two screwdrivers and other small items
> L x W x H: 40 x 68 x 81 mm (1 9/16" x 2 11/16" x 3 3/16")
> Material: Steel

Finish	Item No.
matt aluminum	792.02.252

→ Wrench Hook

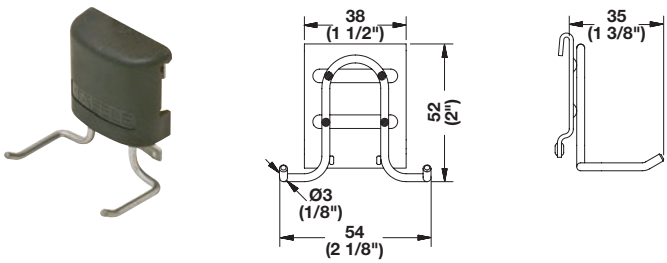

> Heavy duty, organizes two wrenches and other small items
> L x W x H: 35 x 54 x 52 mm (1 3/8" x 2 1/8" x 2")
> Material: Steel

Finish	Item No.
matt aluminum	792.02.251

→ Pliers Hook

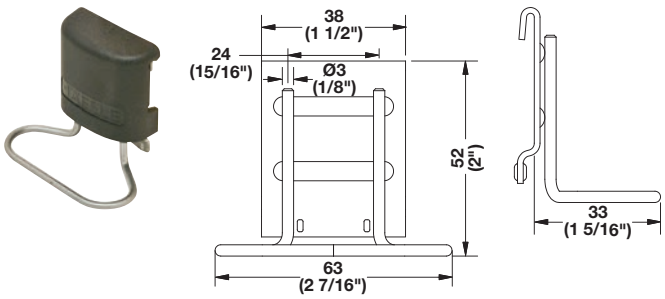

> Organizes pliers and other small items
> L x W x H: 33 x 63 x 52 mm (1 5/16" x 2 7/16" x 2")
> Material: Steel

Finish	Item No.
matt aluminum	792.02.250

Wall track	page 4.20
Cover cap	page 4.33

Dimensional data not binding. Dimensions in mm, inches are approximate. We reserve the right to alter specifications without notice.

TAG Omni Track®

> To be used with wall track 792.00.000
> Cover cap, 792.02.399, sold separately, secures the hook to the wall track allowing the hooks to be repositioned horizontally, see next page
> Material: Steel; Finish: matt aluminum

→ Paper Organizer

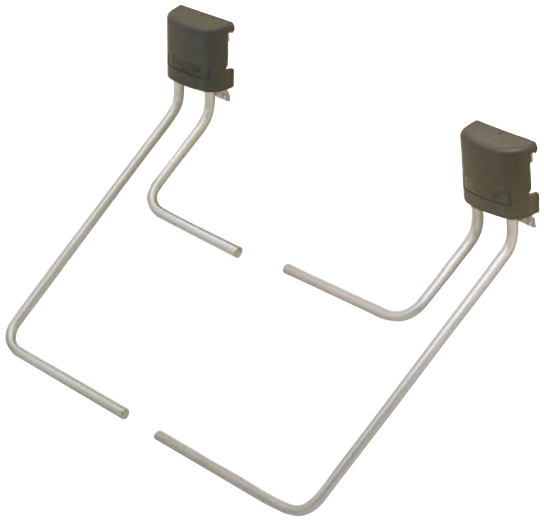

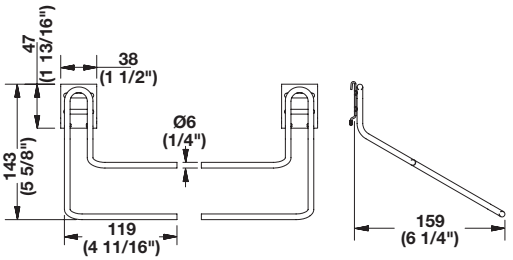

> Organizes rolls of paper towels or wrapping paper
> L x W x H (one side): 159 x 119 x 143 mm
(6 1/4" x 4 11/16" x 5 5/8")

	Item No.
	792.02.254

Supplied With
1 Left piece
1 Right piece

→ Single Hook

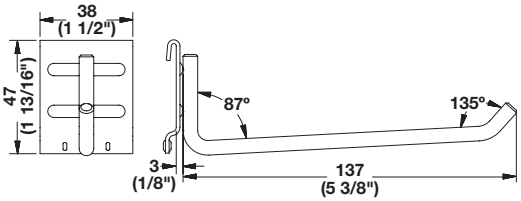

> For general use
> L x W x H: 137 x 38 x 47 mm (5 3/8" x 1 1/2" x 1 13/16")

	Item No.
	792.02.253

Wall track	page 4.20
Cover cap	page 4.33

Dimensional data not binding. Dimensions in mm, inches are approximate. We reserve the right to alter specifications without notice.

TAG Omni Track®

> Hooks are used with wall track 792.00.000
> Cover cap 792.02.349 sold separately, secures the hook to the wall track allowing the hooks to be repositioned horizontally and covers the hole in the base plate

→ Basket Hook

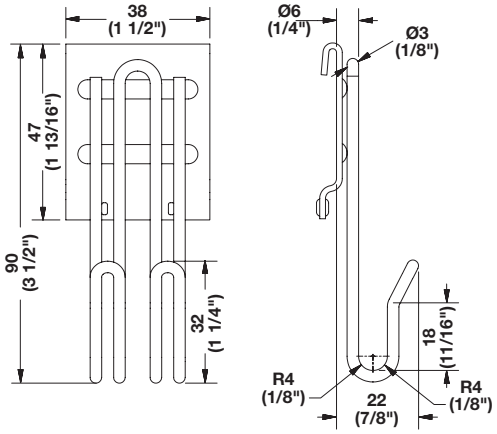

> For use with baskets, 547.XX.XXX
> L x W x H: 22 x 38 x 90 mm (7/8" x 1 1/2" x 3 1/2")
> Material: Steel

Finish	Item No.
matt aluminum	792.02.007

→ Cover Cap

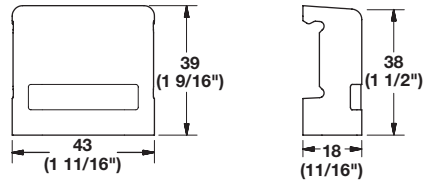

> For small base plate hooks
> For use on hand tool hook, pliers hook, wrench hook, screwdriver hook, basket hook, single hook, and paper organizer hook
> Material: Plastic

Color	Item No.
black	792.02.399

Wall track	page 4.20
Wire baskets	page 4.122

Dimensional data not binding. Dimensions in mm, inches are approximate. We reserve the right to alter specifications without notice.

HÄFELE

TAG Omni Track®

→ Storage Bin

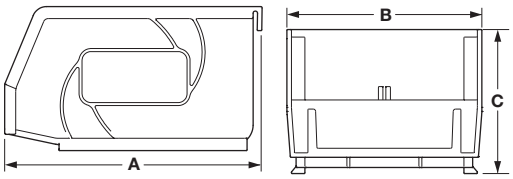

> Slot on bin fronts allow for applying labels
> Hook onto wall track 792.00.000
> Material: Plastic; Color: black

A x B	C	Item No.
133 x 108 (5 1/4" x 4 1/4")	76 (3")	792.02.380
184 x 108 (7 1/4" x 4 1/4")	76 (3")	792.02.381
273 x 140 (10 3/4" x 5 1/2")	127 (5")	792.02.382

→ Small Shelf Bracket

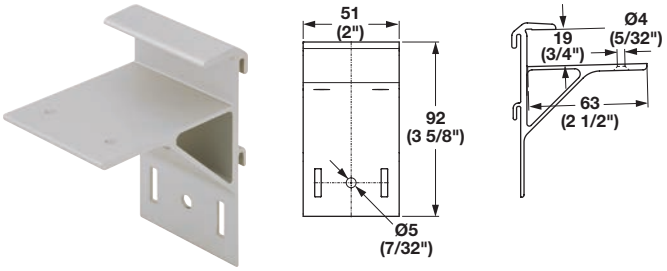

> Used with wall track 792.00.000
> Cover cap, 792.02.349 sold separately, secures the bracket to the wall track, allowing the bracket to be repositioned horizontally
> Made for a 19 mm (3/4") thick shelf
> Application determines number of supports needed
> Recommended for a max. shelf depth of 254 mm (10") and weight up to 23 kg (50 lbs.), provided track is properly secured to studs
> Material: Aluminum

Finish	Item No.
matt aluminum	792.02.060

→ Leveler

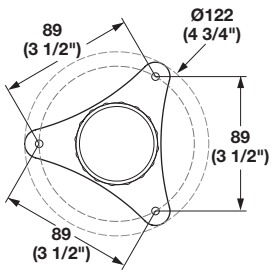

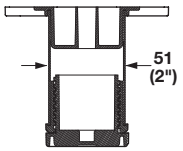

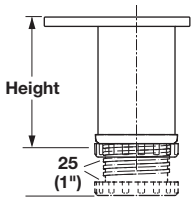

> Adjustable: Offers customization and flexibility for quick installation
> Fluted aluminum tube is strong and non-corrosive in damp conditions
> Tube is easy to cut for custom lengths (saw blade for cutting non-ferrous metals recommended)
> Adjustable foot is pre-inserted in tube
> Offers + 25 mm (1") of adjustment
> Press fit tube onto surface-mounted base plate
> Base plate can be mounted and used as a glide during production
> Levelers are for added support, secure cabinets to wall
> Static weight rating: 160 kg (352 lbs.) per leg
> Material: Tube: Aluminum; Base plate/adjustable foot: Plastic; Color: black

Finish	matt aluminum	black
76 (3")	792.01.080	792.01.380
152 (6")	792.01.081	792.01.381
228 (9")	792.01.082	792.01.382
305 (12")	792.01.083	–

Wall track	page 4.20
Cover cap	page 4.30

Dimensional data not binding. Dimensions in mm, inches are approximate. We reserve the right to alter specifications without notice.

HandiWALL®

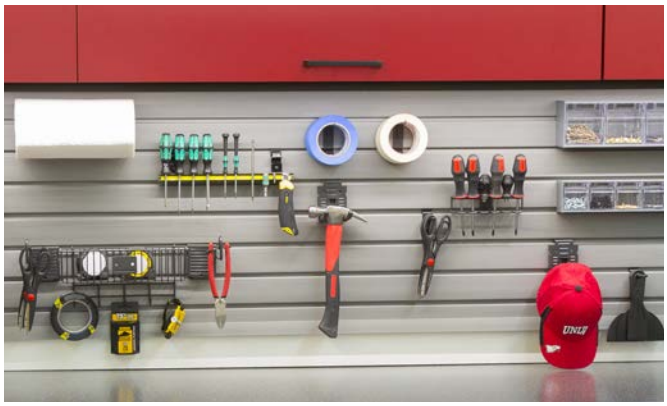

- > Manufactured in the USA with blended Cellular PVC material that has a flame retardant rating of 94 V-O
- > Scratch resistant with normal use; color throughout the product makes surface scratches less noticeable
- > 32 square feet per carton
- > Color coordinated installation screws and trim available
- > Water and moisture resistant
- > Strong and durable
- > Easy to clean

→ Panels

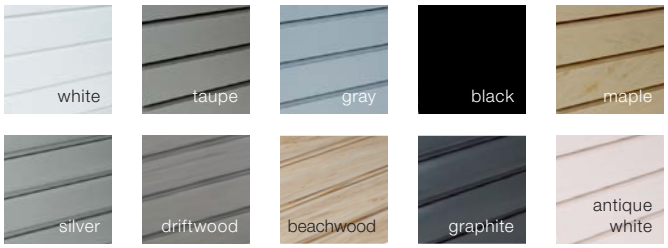

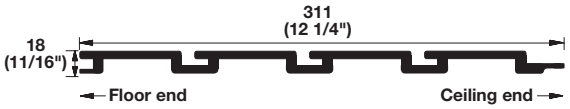

- > Weight capacity: 45 kg (100 lbs.)/square ft.
- > H x L: 305 x 2438 mm (12" x 8')
- > Material: Cellular PVC

Finish	Model No.	Item No.
white	HSW1008	792.10.721
taupe	HSW2008	792.10.621
gray	HSW3008	792.10.521
black	HSW4008	792.10.321
maple	HSW5008	792.10.121
silver	HSW15008	792.10.931
driftwood	HSW16008	792.10.821
antique white	HSW8008	792.10.731
beachwood	HSW14008	792.10.021
graphite	HSW13008	792.10.431

Supplied With
4 Panels/carton

→ Flat Head Tapcon® Screws

- > Ø x L: 5 x 45 mm (3/16" x 1 3/4")
- > Material: Steel

Color	Model No.	Item No.	Packing
white	HSWS100WTC	792.16.730	1000 pcs.
taupe	HSWS200TTC	792.16.630	1000 pcs.
gray	HSWS300GTC	792.16.530	1000 pcs.
maple	HSWS500MTC	792.16.130	1000 pcs.
black	HSWS400BTC	792.16.380	1000 pcs.
graphite	HSWS1308GTC	792.16.480	1000 pcs.

HandiSCREWS™

- > Color matched to the various HandiWALL colors ensuring a seamless application and appearance.
- > Steel construction provides a heavy-duty installation.

→ Drywall Screws

- > Length: 40 mm (1 5/8")
- > Material: Steel

Color	Model No.	Item No.	Packing
white	HSWS100W	792.16.700	1000 pcs.
white	HSWS100TBK	792.16.701	100 pcs.
taupe	HSWS200T	792.16.600	1000 pcs.
taupe	HSWS200TBK	792.16.601	100 pcs.
gray	HSWS300G	792.16.500	1000 pcs.
gray	HSWS300TBK	792.16.501	100 pcs.
black	HSWS400B	792.16.300	1000 pcs.
black	HSWS400BTBK	792.16.301	100 pcs.
maple	HSWS500M	792.16.100	1000 pcs.
maple	HSWS500TBK	792.16.101	100 pcs.
silver	HSWS1500S	792.16.900	1000 pcs.
silver	HSWS1500STBK	792.16.901	100 pcs.
driftwood	HSWS1600S	792.16.400	1000 pcs.
driftwood	HSWS1600STBK	792.16.401	100 pcs.
antique white	HSWS800AW	792.16.710	1000 pcs.
antique white	HSWS800TBK	792.16.711	100 pcs.
beachwood	HSWS1400BW	792.16.000	1000 pcs.
beachwood	HSWS1400BWTBK	792.16.001	100 pcs.
graphite	HSWS1308G	792.16.410	1000 pcs.
graphite	HSWS1308GTBK	792.16.411	100 pcs.

- > Length: 64 mm (2 1/2")

Color	Model No.	Item No.	Packing
white	HSWS125W	792.16.760	1000 pcs.
taupe	HSWS225T	792.16.660	1000 pcs.
gray	HSWS325G	792.16.560	1000 pcs.
maple	HSWS525M	792.16.160	1000 pcs.
silver	HSWS1525S	792.16.960	1000 pcs.
driftwood	HSWS1625S	792.16.460	1000 pcs.
antique white	HSWS825AW	792.16.770	1000 pcs.
beachwood	HSWS1425BW	792.16.060	1000 pcs.
graphite	HSWS1325G	792.16.470	1000 pcs.

Dimensional data not binding. Dimensions in mm, inches are approximate. We reserve the right to alter specifications without notice.

HandiTRIM™

> Wide array of extrusions help to finish off the HandiWALL® installation
> Designed to frame out a wall, eliminate seams and make 90° angle connections visually appealing
> Length: 2438 mm (96")
> Material: PVC

→ Division Molding

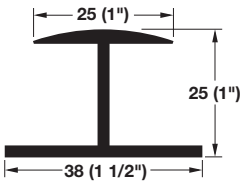

Color	Model No.	Item No.
white	HST1096D	792.10.742
taupe	HST2096D	792.10.642
gray	HST3096D	792.10.542
black	HST4096D	792.10.342
maple	HST5096D	792.10.142
silver	HST15096D	792.10.952
driftwood	HST16096D	792.10.842
antique white	HST8096D	792.10.752
beachwood	HST14096D	792.10.042
graphite	HST13096D	792.10.452

→ Indented Edge Cap

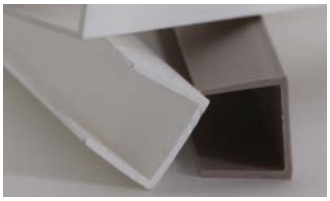

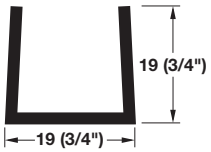

Color	Model No.	Item No.
white	HST1096E	792.10.762
taupe	HST2096E	792.10.662
gray	HST3096E	792.10.562
black	HST4096E	792.10.362
maple	HST5096E	792.10.162
silver	HST15096E	792.10.972
driftwood	HST16096E	792.10.862
antique white	HST8096E	792.10.772
beachwood	HST14096E	792.10.062
graphite	HST13096E	792.10.472

→ Inside/Outside Corner Molding

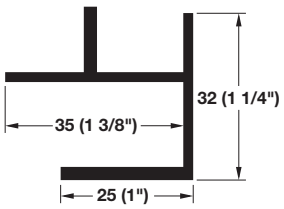

Color	Model No.	Item No.
white	HST1096M	792.11.702
taupe	HST2096M	792.11.602
gray	HST3096M	792.11.502
black	HST4096M	792.11.302
maple	HST5096M	792.11.102
silver	HST15096M	792.11.912
driftwood	HST16096M	792.11.802
antique white	HST8096M	792.11.712
beachwood	HST14096M	792.11.002
graphite	HST13096M	792.11.412

→ Large J Molding

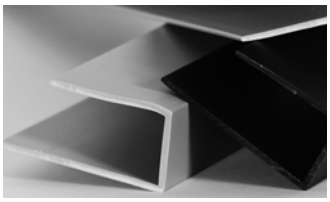

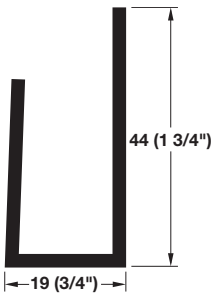

Color	Model No.	Item No.
white	HST1096L	792.10.782
taupe	HST2096L	792.10.682
gray	HST3096L	792.10.582
black	HST4096L	792.10.382
maple	HST5096L	792.10.182
silver	HST15096L	792.10.992
driftwood	HST16096L	792.10.882
antique white	HST8096L	792.10.792
beachwood	HST14096L	792.10.082
graphite	HST13096L	792.10.492

Dimensional data not binding. Dimensions in mm, inches are approximate. We reserve the right to alter specifications without notice.

HandiTRIM™

→ Handi Color Strips

> Use to hide screws or as decorative accent to add color to HandiWall®
> Each color strip includes self-adhesive tape on the back to ensure the strip remains securely in place
> Color strips will not affect installation of accessories
> Length: 2438 mm (96")
> Material: ABS Plastic

Color	Model No.	Item No.
white	HSCST1008-30	792.11.750
taupe	HSCST2008-30	792.11.650
gray	HSCST3008-30	792.11.550
black	HSCST4008-30	792.11.350
maple	HSCST5008-30	792.11.150
silver	HSCST15008-30	792.11.950
driftwood	HSCST21008-30	792.11.850
antique white	HSCST8008-30	792.11.760
beachwood	HSCST14008-30	792.11.050
graphite	HSCST13008-30	792.11.460

Supplied With
30 pcs. per package

Note
Image shows finishes in table order.

Dimensional data not binding. Dimensions in mm, inches are approximate. We reserve the right to alter specifications without notice.

HandiKITS™

→ Deluxe Accessory Kit

	Item No.
	792.15.051

Supplied With

Description	Model No.	Item No.	Qty.
Basket, 8" x 12"	HSB0812B	792.12.010	2
Basket, 12" x 18"	HSB1218B	792.12.020	1
Basket, 12" x 24"	HSB1224B	792.12.030	1
Loop Hook, 4"	HSH04LBWL	792.12.050	1
Loop Hook, 8"	HSH08LBWL	792.12.051	2
Double Hook, 4"	HSH04DBWL	792.12.060	4
Double Hook, 8"	HSH08DBWL	792.12.061	3
Snap Hook, 1"	HSH01SH	792.12.070	6
Snap Hook, 4"	HSH04SH	792.12.071	6
Snap Hook, 6"	HSH06SH	792.12.072	6
Snap Hook, 8"	HSH08SH	792.12.073	3
J Hook, 6"	HSH06JBWL	792.12.080	2
Long Tool Bar with Hooks, 24"	HSH03SBWL	792.12.090	2
Shelf, 14" x 24"	HSS1424B	792.13.030	1
Shelf, 14" x 48"	HSS1448B	792.13.040	1
Shoe Rack, 14" x 24"	HSS2414G	792.22.300	2

Note
Requires 4' x 16' (2 cartons) of Handiwall panels.

→ Basic Accessory Kit

	Item No.
	792.15.031

Supplied With

Description	Model No.	Item No.	Qty.
Basket, 8" x 12"	HSB0812B	792.12.010	1
Basket, 12" x 24"	HSB1224B	792.12.030	1
Loop Hook, 4"	HSH04LBWL	792.12.050	1
Loop Hook, 8"	HSH08LBWL	792.12.051	1
Double Hook, 4"	HSH04DBWL	792.12.060	2
Double Hook, 8"	HSH08DBWL	792.12.061	1
Snap Hook, 1"	HSH01SH	792.12.070	3
Snap Hook, 4"	HSH04SH	792.12.071	6
J Hook, 6"	HSH06JBWL	792.12.080	1
Long Tool Bar with Hooks, 24"	HSH03SBWL	792.12.090	1

Note
Requires 4' x 8' section (1 carton) of Handiwall panels.

Dimensional data not binding. Dimensions in mm, inches are approximate. We reserve the right to alter specifications without notice.

HandiKITS™

→ Intermediate Accessory Kit

	Item No.
	792.15.041

Supplied With

Description	Model No.	Item No.	Qty.
Basket, 8" x 12"	HSB0812B	792.12.010	1
Basket, 12" x 18"	HSB1218B	792.12.020	1
Basket, 12" x 24"	HSB1224B	792.12.030	1
Loop Hook, 4"	HSH04LBWL	792.12.050	1
Loop Hook, 8"	HSH08LBWL	792.12.051	2
Double Hook, 4"	HSH04DBWL	792.12.060	3
Double Hook, 8"	HSH08DBWL	792.12.061	2
Snap Hook, 1"	HSH01SH	792.12.070	3
Snap Hook, 4"	HSH04SH	792.12.071	6
Snap Hook, 6"	HSH06SH	792.12.072	3
Snap Hook, 8"	HSH08SH	792.12.073	3
J Hook, 6"	HSH06JBWL	792.12.080	1
Long Tool Bar with Hooks, 24"	HSH03SBWL	792.12.090	1
Shelf, 14" x 24"	HSS1424B	792.13.030	1
Shoe Rack, 14" x 24"	HSS2414G	792.22.300	1

Note
Requires 4' x 16' (2 cartons) of Handiwall panels.

Dimensional data not binding. Dimensions in mm, inches are approximate. We reserve the right to alter specifications without notice.

HandiKITS™

→ Sports Accessory Kit

	Item No.
	792.15.081

Supplied With

Description	Model No.	Item No.	Qty.
Basket, 8" x 12"	HSB0812B	792.12.010	1
Double Hook, 4"	HSH04DBWL	792.12.060	1
Double Hook, 8"	HSH08DBWL	792.12.061	3
J Hook, 6"	HSH06JBWL	792.12.080	1
Tennis Accessory Holder	HSTAHNL	792.13.090	1
Horizontal Bike Rack	HSHBRNL	792.14.010	1
Large Mesh Storage Basket, mesh	HSLSB3426B	792.14.030	1

Note
Requires 4' x 8' section (1 carton) of Handiwall panels.

→ Garden Center Accessory Kit

	Item No.
	792.15.091

Supplied With

Description	Model No.	Item No.	Qty.
Basket, 12" x 18"	HSB1218B	792.12.020	1
Garden Center	HSGCNL	792.12.040	1
Loop Hook, 8"	HSH08LBWL	792.12.051	1
Double Hook, 4"	HSH04DBWL	792.12.060	1
Double Hook, 8"	HSH08DBWL	792.12.061	1
J Hook, 6"	HSH06JBWL	792.12.080	2
Long Tool Bar with Hooks, 24"	HSH03SBWL	792.12.090	1
S Hook	HSSHKBNL	792.13.000	2
Double Utility Hook	HSDUHBWL	792.13.010	1
Shelf, 14" x 24"	HSS1424B	792.13.030	2

Note
Requires 4' x 8' section (1 carton) of Handiwall panels.

Dimensional data not binding. Dimensions in mm, inches are approximate. We reserve the right to alter specifications without notice.

HandiKITS™

→ Work Bench Accessory Kit

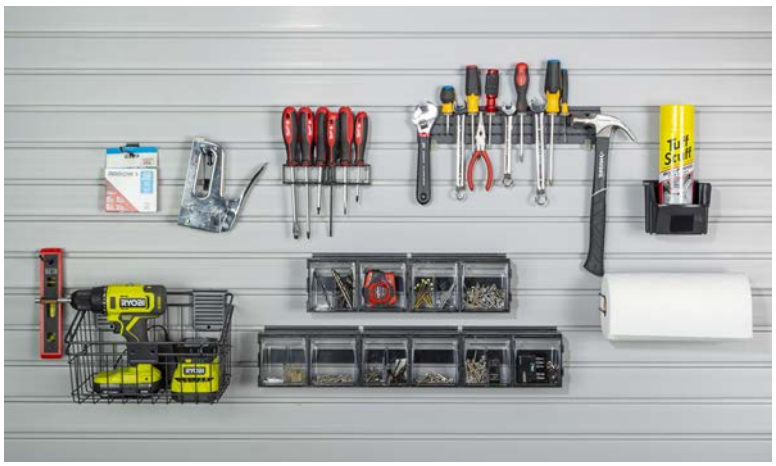

	Item No.
	792.15.071

Supplied With

Description	Model No.	Item No.	Qty.
Basket, 8" x 12"	HSB0812B	792.12.010	1
Snap Hook, 4"	HSH04SH	792.12.071	3
9 Tilt Bin Storage Unit	HSB09TOB	792.14.050	1
6 Tilt Bin Storage Unit	HSB06TOB	792.14.051	1
Screwdriver Rack	HSSDHB	792.14.060	1
Magnetic Tool Pad	HSMTP15400	792.22.360	1
Multi-Purpose Roll Holder	HSMPRH	792.14.080	1

Note
Requires 4' x 8' section (1 carton) of HandiWALL panels.

→ Golf Accessory Kit

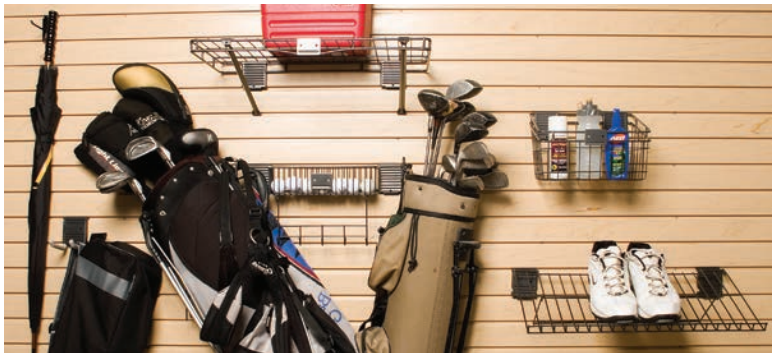

	Item No.
	792.15.060

Supplied With

Description	Model No.	Item No.	Qty.
Basket, 8" x 12"	HSB0812B	792.12.010	1
Double Hook, 4"	HSH04DBWL	792.12.060	1
Snap Hook, 4"	HSH04SH	792.12.071	1
Shelf, 14" x 24"	HSS1424B	792.13.030	1
Shoe Rack, 14" x 24"	HSS2414G	792.22.300	1
Golf Accessory Holder	HSGAHB	792.13.060	1

Note
Requires 4' x 8' section (1 carton) of HandiWALL panels.

Dimensional data not binding. Dimensions in mm, inches are approximate. We reserve the right to alter specifications without notice.

HandiACCESSORIES™

→ Storage Basket

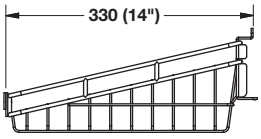

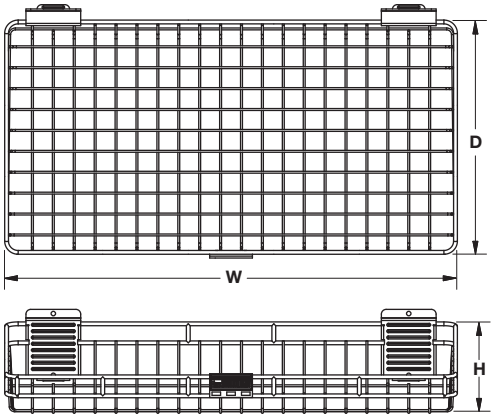

> Designed to easily secure to HandiWALL®
> Several convenient sizes for endless storage configurations
> Material: Steel, powder-coated; Finish: graphite

W x D x H	Weight capacity	Model No.	Item No.
308 x 92 x 83 (12 1/8" x 3 5/8" x 3 1/4")	9 kg (20 lbs.)	HSB0312B	792.12.000
302 x 216 x 197 (11 7/8" x 8 1/2" x 7 3/4")	18 kg (40 lbs.)	HSB0812B	792.12.010
454 x 324 x 194 (17 7/8" x 12 3/4" x 7 5/8")	27 kg (60 lbs.)	HSB1218B	792.12.020
606 x 314 x 121 (23 7/8" x 12 3/8" x 4 3/4")	27 kg (60 lbs.)	HSB1224B	792.12.030

→ Garden Center

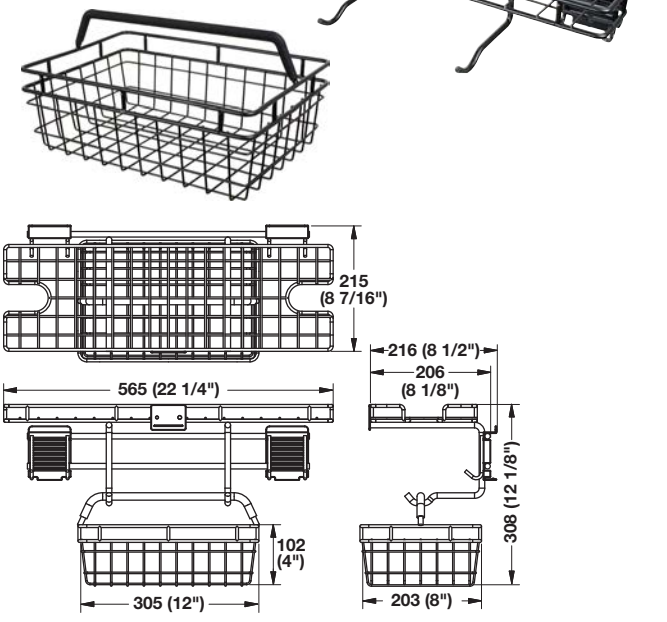

> Designed with a detachable hanging basket to carry tools where needed
> W x D x H: 565 x 216 x 308 mm (22 1/4" x 8 1/2" x 12 1/8")
> Basket - W x D x H: 305 x 203 x 102 mm (12" x 8" x 4")
> Material: Steel, powder-coated; Finish: graphite

Model No.	Item No.
HSGNL	792.12.040

Dimensional data not binding. Dimensions in mm, inches are approximate. We reserve the right to alter specifications without notice.

HandiACCESSORIES™

→ Hooks

> Wide variety of steel constructed hooks and brackets for maximum strength
> Durable wire construction allows for easy mounting to HandiWALL®
> Hooks are rubber-coated for secure gripping with a rust-resistant powder-coated finish
> Ideal for long handled tools, cords, folding chairs, ladders, heavy tools, bicycles, and much more

Note
Locking feature: The hook engages automatically when installing, and once seated into the slot of the HandiWALL®, the lock will then close and hold it firmly in place. To remove it, simply press down on the spring-loaded lock.

→ Loop Hook

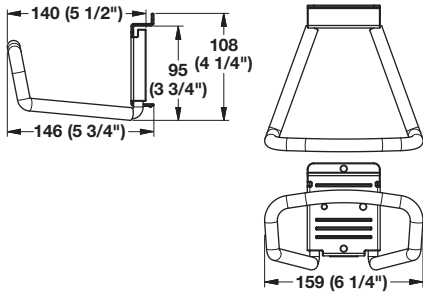

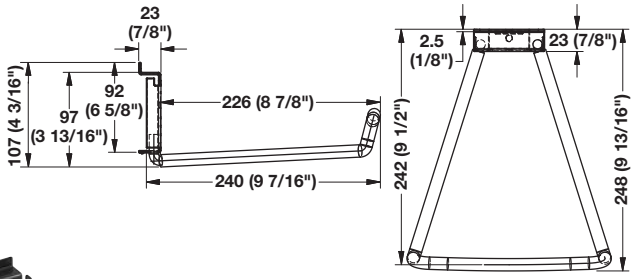

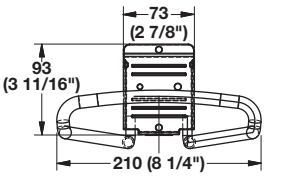

> Includes locking feature
> Length: 101 mm (4")
> Weight capacity: 13.6 kg (30 lbs.)
> Material: Steel, powder-coated, Soft Vinyl; Finish: graphite

Model No.	Item No.
HSH04LBWL	792.12.050

> Includes locking feature
> Length: 203 mm (8")
> Weight capacity: 18 kg (40 lbs.)
> Material: Steel, powder-coated, Soft Vinyl; Finish: graphite

Model No.	Item No.
HSH08LBWL	792.12.051

→ Snap Hook

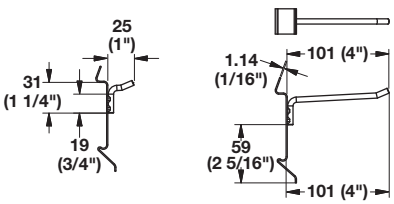

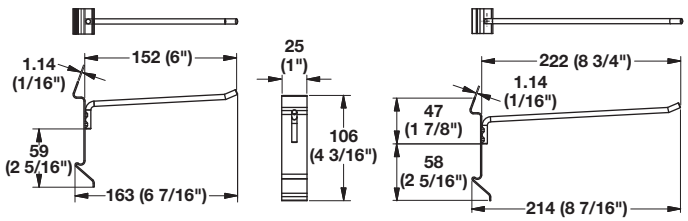

> Material: Steel, powder-coated; Finish: graphite

Length	Model No.	Item No.
25 (1")	HSH01SH	792.12.070
102 4")	HSH04SH	792.12.071
152 (6")	HSH06SH	792.12.072
203 (8")	HSH08SH	792.12.073

Dimensional data not binding. Dimensions in mm, inches are approximate. We reserve the right to alter specifications without notice.

HandiACCESSORIES™

→ Hooks

- > Wide variety of steel constructed hooks and brackets for maximum strength
- > Durable wire construction allows for easy mounting to HandiWALL®
- > Hooks are rubber-coated for secure gripping with a rust-resistant powder-coated finish
- > Ideal for long handled tools, cords, folding chairs, ladders, heavy tools, bicycles, and much more
- > Material: Steel, powder-coated, Soft Vinyl; Finish: graphite

Note
Locking feature: The hook engages automatically when installing, and once seated into the slot of the HandiWALL®, the lock will then close and hold it firmly in place. To remove it, simply press down on the spring-loaded lock.

→ Double Hook

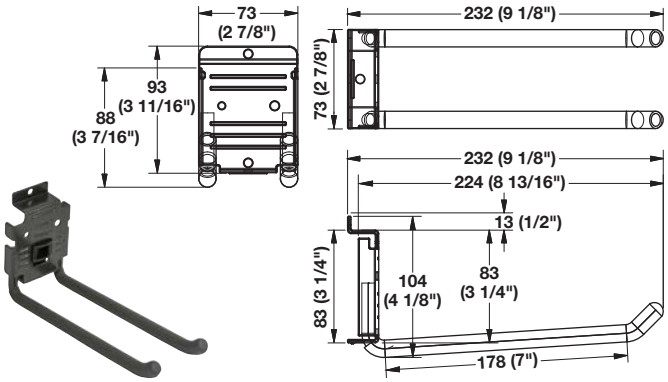

- > Includes locking feature
- > Length: 203 mm (8")
- > Weight capacity: 23 kg (50 lbs.)

Model No.	Item No.
HSH08DBWL	792.12.061

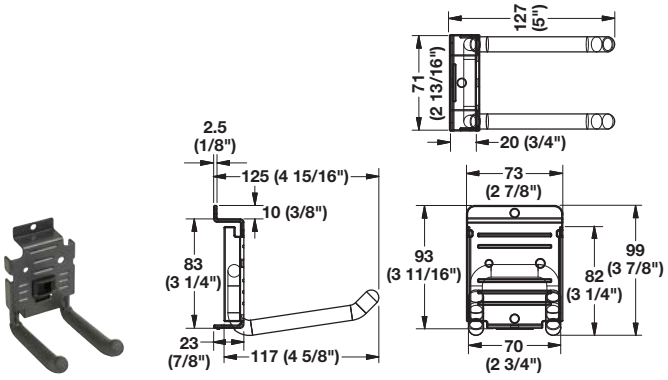

- > Includes locking feature
- > Length: 102 mm (4")
- > Weight capacity: 18 kg (40 lbs.)

Model No.	Item No.
HSH04DBWL	792.12.060

→ J Hook

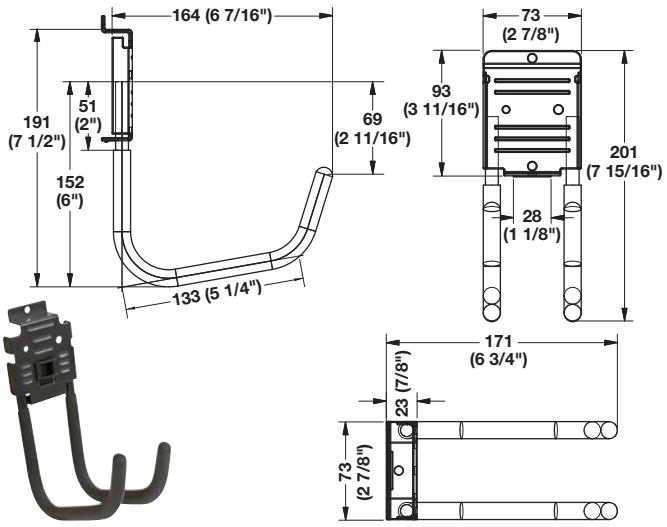

- > Includes locking feature
- > Length: 152 mm (6")
- > Weight capacity: 18 kg (40 lbs.)

Model No.	Item No.
HSH06JBWL	792.12.080

→ S Hook

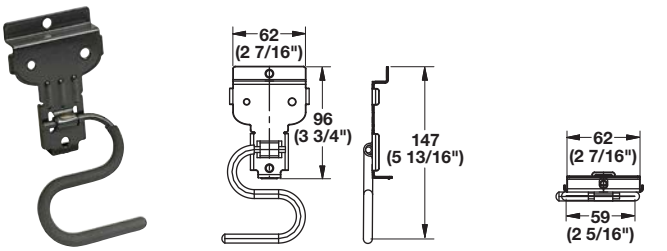

Model No.	Item No.
HSSHKBNL	792.13.000

Dimensional data not binding. Dimensions in mm, inches are approximate. We reserve the right to alter specifications without notice.

HandiACCESSORIES™

→ Tool Bar with Hooks

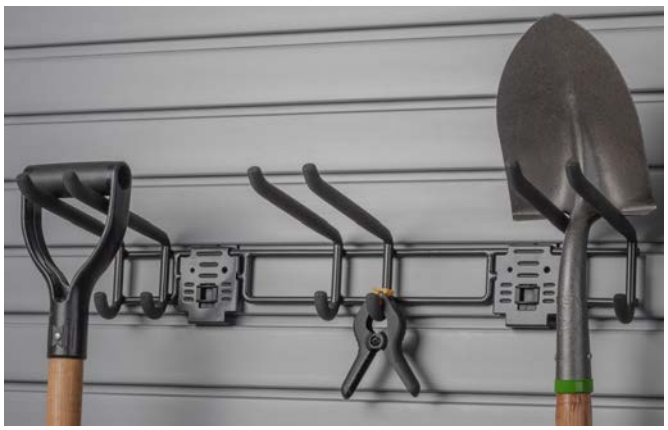

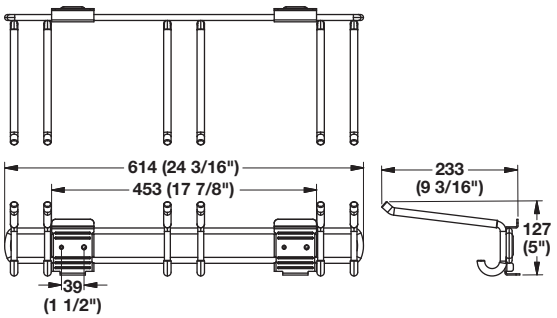

> Includes locking feature
> Weight capacity: 27.2 kg (60 lbs.)
> Material: Steel, powder-coated, Soft Vinyl; Finish: graphite

Model No.	Item No.
HSH03SBWL	792.12.090

→ Double Utility Hook

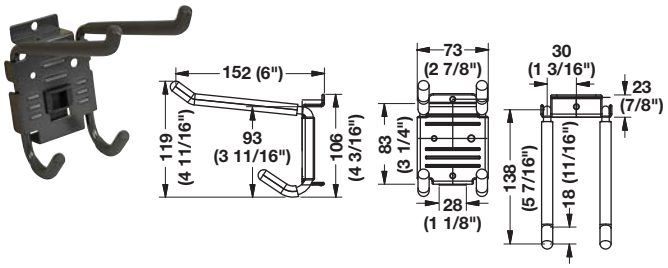

> Includes locking feature
> Material: Steel, powder-coated, Soft Vinyl; Finish: graphite

Model No.	Item No.
HSDUHBWL	792.13.010

→ Garment Hook

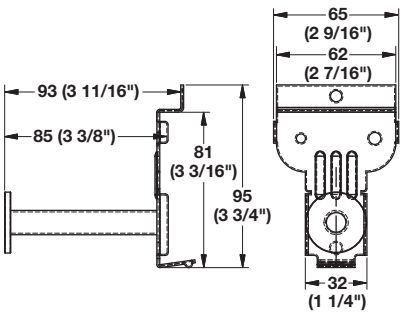

> Material: Steel, powder-coated; Finish: graphite

Model No.	Item No.
HSHGHPK	792.13.020

Dimensional data not binding. Dimensions in mm, inches are approximate. We reserve the right to alter specifications without notice.

HandiACCESSORIES™

> Shelves help organize, add functionality, and clear clutter from the floor
> Durable wire construction with a rust-resistant powder-coated finish
> Material: Steel, powder-coated; Finish: graphite

→ Shelves

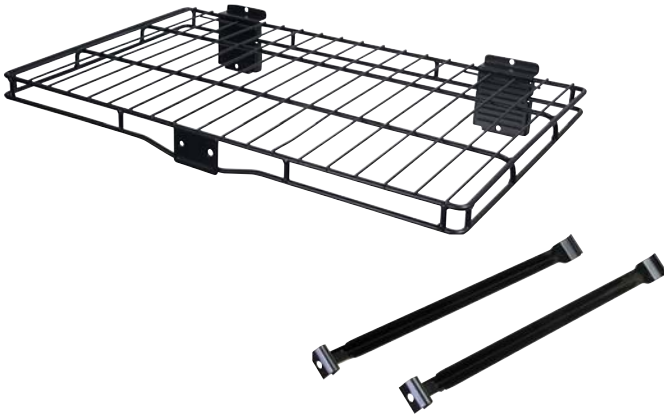

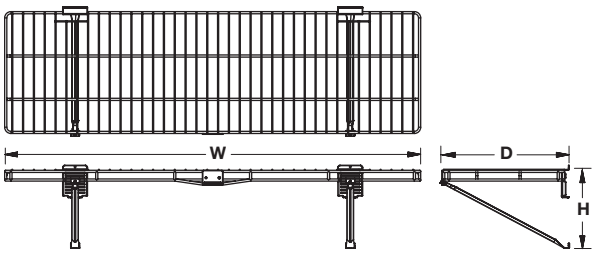

W x D x H	Weight capacity	Model No.	Item No.
610 x 365 x 152 (24" x 14 3/8" x 6")	34 kg (75 lbs.)	HSS1424B	792.13.030
1219 x 365 x 152 (48" x 14 3/8" x 6")	56.6 kg (125 lbs.)	HSS1448B	792.13.040

→ Shoe Rack

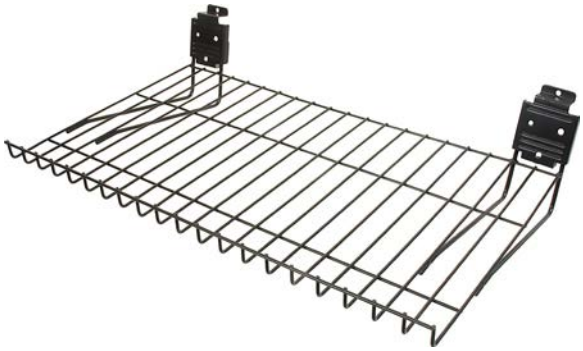

> W x D x H: 610 x 375 x 176 mm (24" x 14 3/4" x 6 15/16")
> Weight capacity: 6.8 kg (15 lbs.)

Model No.	Item No.
HSS2414G	792.22.300

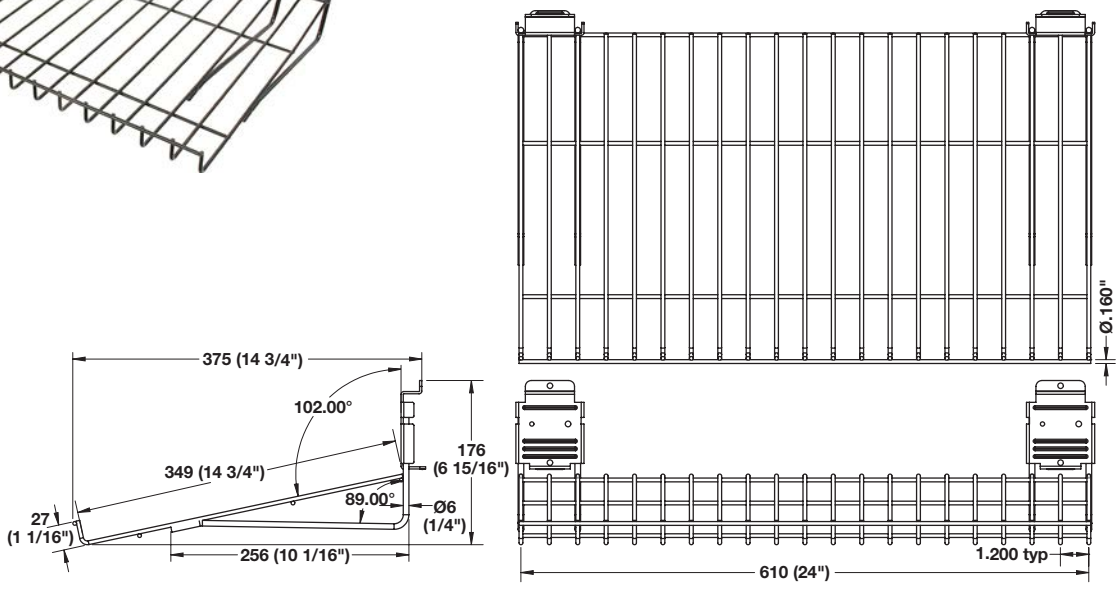

Dimensional data not binding. Dimensions in mm, inches are approximate. We reserve the right to alter specifications without notice.

HandiBASKET - Mini Bin Kit

> Clear bins provide visibility to contents
> Bins can be stacked
> Additional bins can be purchased separately
> Lids do not snap into place; they rest on top of the bins
> Material: Shelf: Steel, powder-coated;
Finish: graphite; Bins: Plastic

→ Basket-Mini Bin Kit

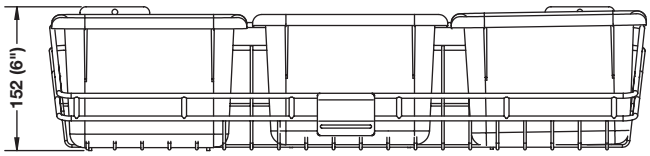

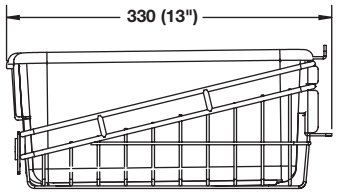

	Item No.
	792.22.430

Supplied With
1 Shelf
3 Bins with lids

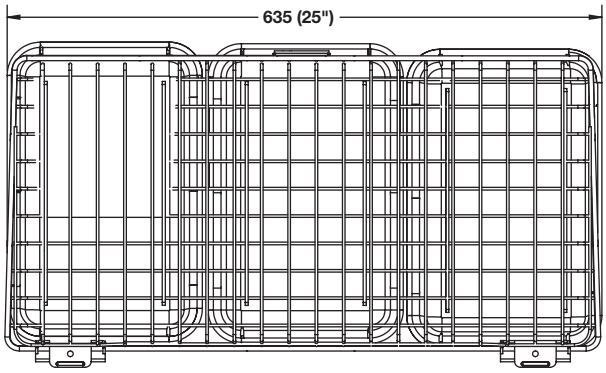

→ Mini Bin Pack

> Lids do not snap into place; they rest on top of the bins
> Material: Plastic

	Item No.
	792.22.431

Supplied With
3 Bins with lids

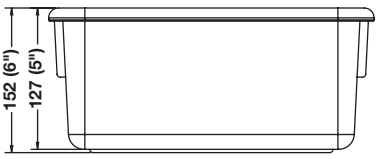

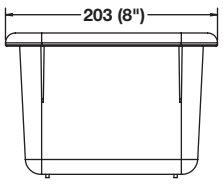

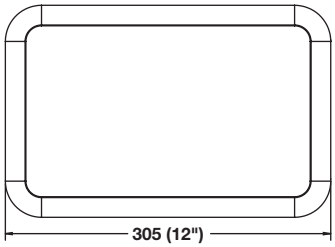

Dimensional data not binding. Dimensions in mm, inches are approximate. We reserve the right to alter specifications without notice.

This page is left blank intentionally.

Dimensional data not binding. Dimensions in mm, inches are approximate. We reserve the right to alter specifications without notice.

HandiACCESSORIES™

→ Sports

> Sports storage accessories store and protect expensive sporting gear and much more
> Multi-functional and durable providing a clutter-free environment
> All accessories easily attach to the HandiWALL®
> W x D x H: 686 x 330 x 464 mm (27" x 13" x 18 1/4")
> Material: Steel, powder-coated; Finish: graphite

→ Sports Accessory Rack

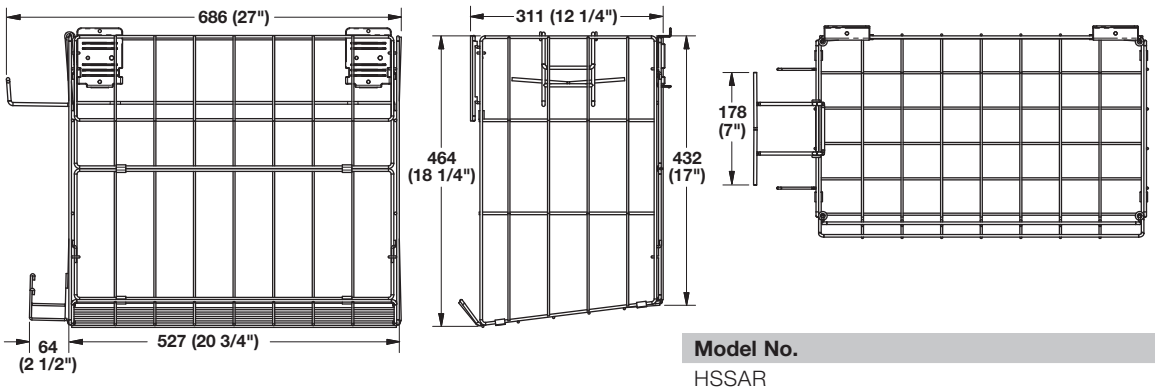

Model No.	Item No.
HSSAR	792.13.080

Dimensional data not binding. Dimensions in mm, inches are approximate. We reserve the right to alter specifications without notice.

HandiACCESSORIES™

→ Sports

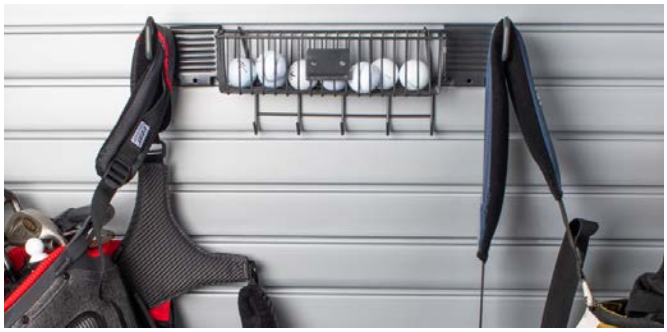

> Sports storage accessories store and protect expensive sporting gear and much more
> Multi-functional and durable providing a clutter-free environment
> All accessories easily attach to the HandiWALL®
> W x D x H: 473 x 86 x 210 mm (18 5/8" x 3 3/8" x 8 1/4")
> Material: Steel, powder-coated; Finish: graphite

→ Golf Accessory Holder

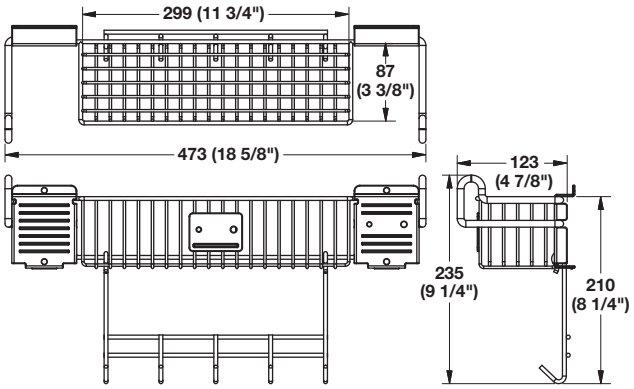

Model No.	Item No.
HSGAHB	792.13.060

Dimensional data not binding. Dimensions in mm, inches are approximate. We reserve the right to alter specifications without notice.

HandiACCESSORIES™

→ Tennis Accessory Holder

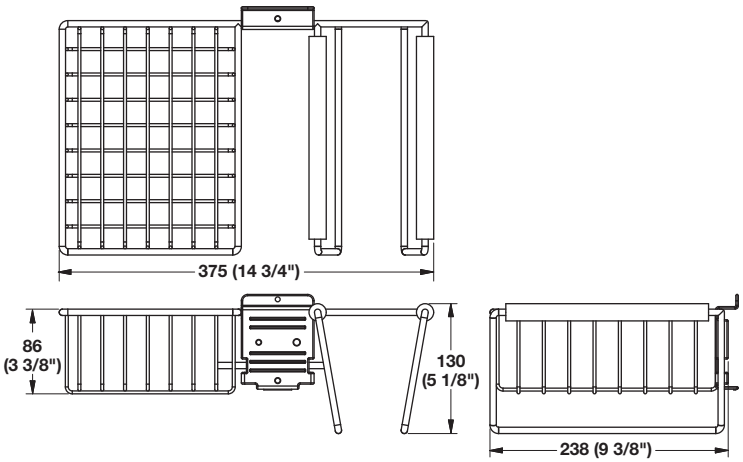

> W x D x H: 375 x 86 x 130 mm (14 3/4" x 3 3/8" x 5 1/8")
> Material: Steel, powder-coated; Finish: graphite

Model No.	Item No.
HSTAHNL	792.13.090

→ Fishing Rod Holder

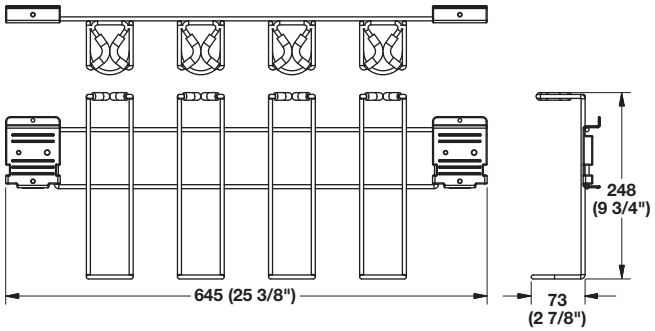

> W x D x H: 645 x 73 x 248 mm (25 3/8" x 2 7/8" x 9 3/4")
> Material: Steel, powder-coated; Finish: graphite

Model No.	Item No.
HSFRHNL	792.14.000

Dimensional data not binding. Dimensions in mm, inches are approximate. We reserve the right to alter specifications without notice.

HÄFELE

HandiACCESSORIES™

→ Sports

> Sports storage accessories store and protect expensive sporting gear and much more
> Multi-functional and durable providing a clutter-free environment
> All accessories easily attach to the HandiWALL®
> Material: Steel, powder-coated, Soft Vinyl; Finish: graphite

Note
Locking feature: The hook engages automatically when installing, and once seated into the slot of the HandiWALL®, the lock will then close and hold it firmly in place. To remove it, simply press down on the spring-loaded lock.

→ Horizontal Bike Rack

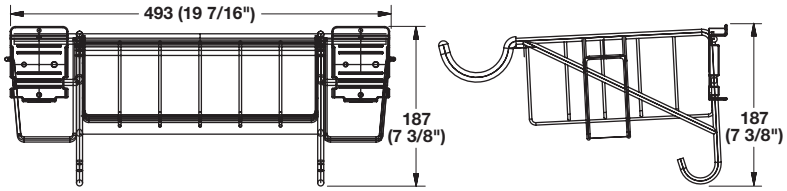

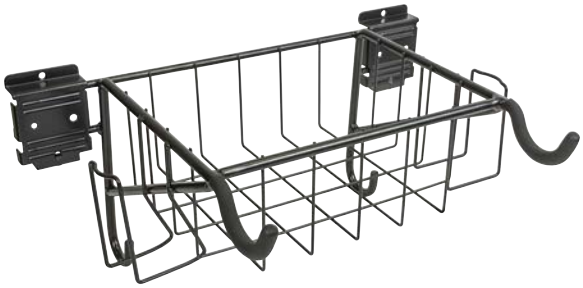

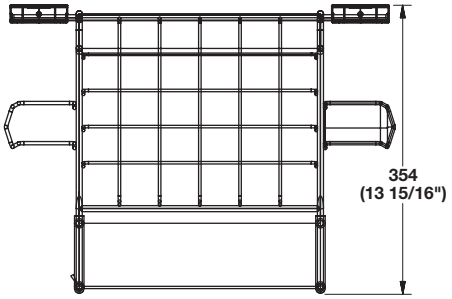

> W x D x H: 495 x 356 x 187 mm (19 1/2" x 14" x 7 3/8")

Model No.	Item No.
HSHBRNL	792.14.010

→ Bike Hook

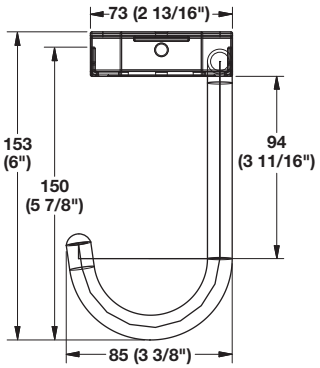

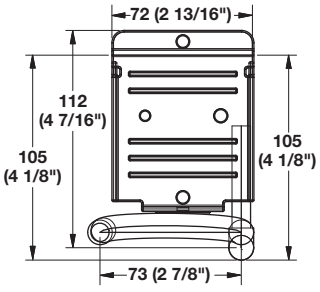

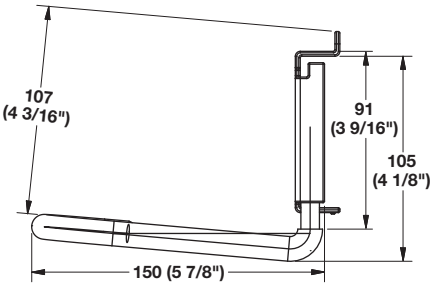

> Length: 127 mm (5")
> Includes locking feature
> W x D x H: 86 x 149 x 105 mm (3 3/8" x 5 7/8" x 4 1/8")

Model No.	Item No.
HSH05BWL	792.13.070

Dimensional data not binding. Dimensions in mm, inches are approximate. We reserve the right to alter specifications without notice.

HandiACCESSORIES™

→ Horizontal Bike Hook

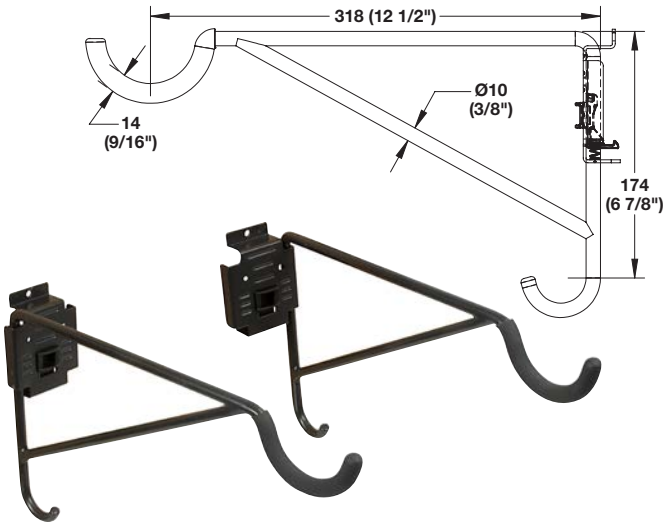

> Includes locking feature
> W x D x H: 73 x 384 x 209 mm (2 7/8" x 15 1/8" x 8 1/4")
> Material: Steel, powder-coated, Soft Vinyl; Finish: graphite

Model No.	Item No.
HSHBHWL	792.22.310

→ Fat Tire Bike Hook

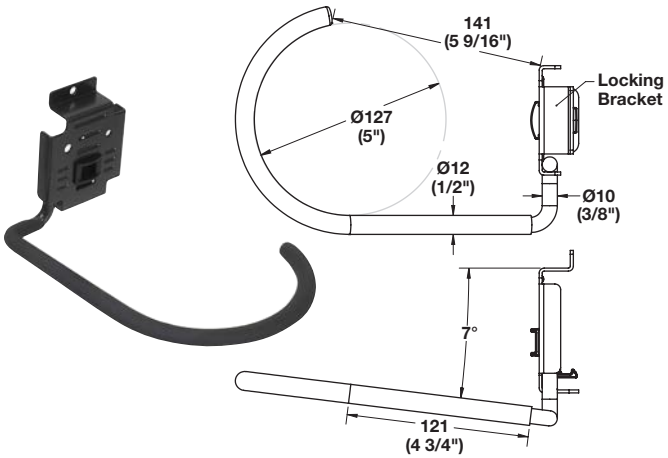

> Includes locking feature
> W x D x H: 159 x 229 x 203 mm (6 1/4" x 9" x 8")
> Material: Steel, powder-coated, Soft Vinyl; Finish: graphite

Model No.	Item No.
HSHFTBHWL	792.22.320

Dimensional data not binding. Dimensions in mm, inches are approximate. We reserve the right to alter specifications without notice.

HandiACCESSORIES™

→ Sports

> Sports storage accessories store and protect expensive sporting gear and much more
> Multi-functional and durable providing a clutter-free environment
> All accessories easily attach to the HandiWALL®

Note
Locking feature: The hook engages automatically when installing, and once seated into the slot of the HandiWALL®, the lock will then close and hold it firmly in place. To remove it, simply press down on the spring-loaded lock.

→ Ski Rack

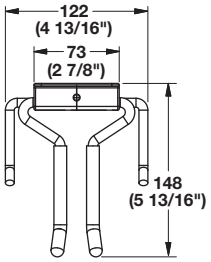

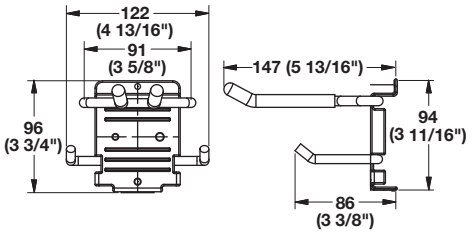

> Includes locking feature
> W x D x H: 121 x 140 x 92 mm (4 3/4" x 5 1/2" x 3 5/8")
> Material: Steel, powder-coated, Soft Vinyl; Finish: graphite

Model No.	Item No.
HSSRHWL	792.14.020

→ Large Mesh Storage Basket

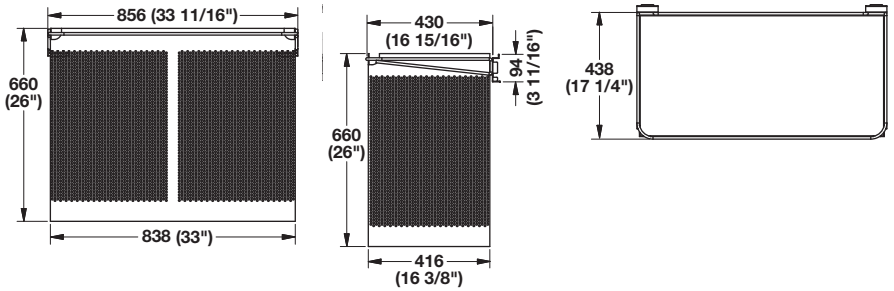

> W x D x H: 857 x 438 x 660 mm (33 3/4" x 17 1/4" x 26")
> Material: Steel, powder-coated; Finish: graphite

Model No.	Item No.
HSLSB3426B	792.14.030

Dimensional data not binding. Dimensions in mm, inches are approximate. We reserve the right to alter specifications without notice.

HandiACCESSORIES™

→ HandiTUB

> Includes shelf and removable tub
> Designed to prevent tub from tilting forward when opening and closing
> Tub includes clear window for labeling
> Material: Frame: Steel, powder-coated; Finish: black; Tub: Plastic; Color: smoke

	Item No.
	792.22.340

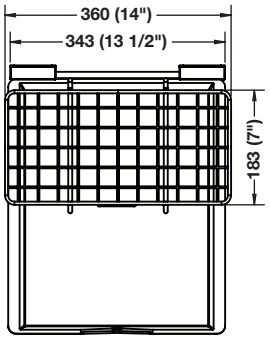

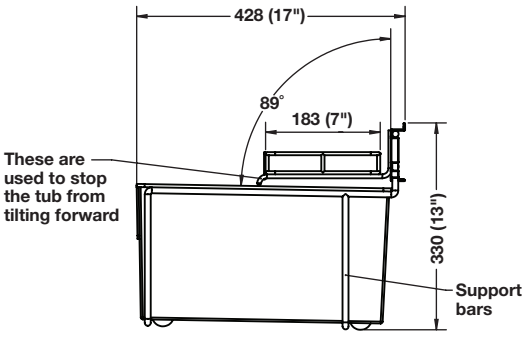

Dimensional data not binding. Dimensions in mm, inches are approximate. We reserve the right to alter specifications without notice.

This page is left blank intentionally.

Dimensional data not binding. Dimensions in mm, inches are approximate. We reserve the right to alter specifications without notice.

HandiACCESSORIES™

→ Storage Bins

> Organize small parts
> Bins attach securely and remove effortlessly
> Tilt bins feature a transparent bin that tips out at a 45° angle
> Clear bins provide a complete view of small items

→ Tilt Bins

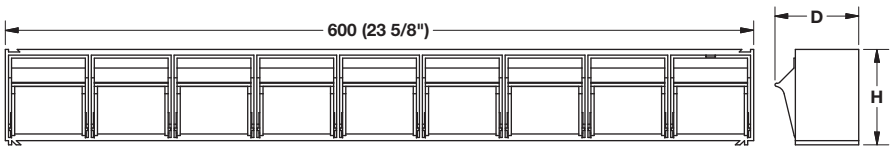

> Width: 600 mm (23 5/8")
> Material: Plastic, clear

Compartments	D x H	Model No.	Item No.
9	67 x 76 (2 5/8" x 3")	HSB09TOB	792.14.050
6	92 x 111 (3 5/8" x 4 3/8")	HSB06TOB	792.14.051

Note Locking Accessory Clip, item 792.15.300 is required for wall attachment, refer to page **4.54**.

→ Utility Bins

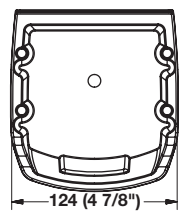

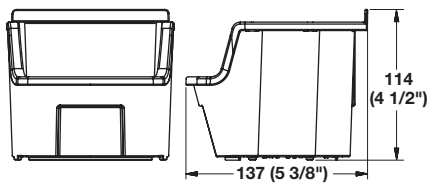

> W x D x H: 124 x 137 x 114 mm (4 7/8" x 5 3/8" x 4 1/2")
> Material: Plastic

Color	Model No.	Item No.
taupe	HSPUB	792.14.640
gray	HSPUBG	792.14.540

→ Locking Accessory Clip

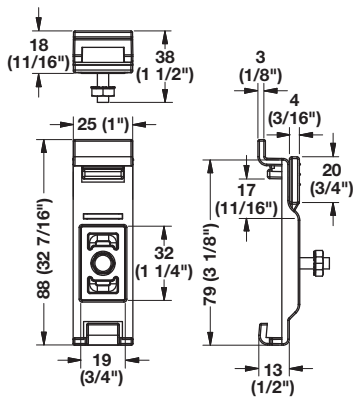

> Required for tilt bins and magnetic tool bar
> W x D x H: 25 x 38 x 89 mm (1" X 1 1/2" X 3 1/2")
> Material: Steel; Finish: graphite

Model No.	Item No.
HSHN3PAC	792.15.300

Supplied With 2 Clips, 2 Nuts, 2 Screws

Dimensional data not binding. Dimensions in mm, inches are approximate. We reserve the right to alter specifications without notice.

This page is left blank intentionally.

Dimensional data not binding. Dimensions in mm, inches are approximate. We reserve the right to alter specifications without notice.

HandiACCESSORIES™

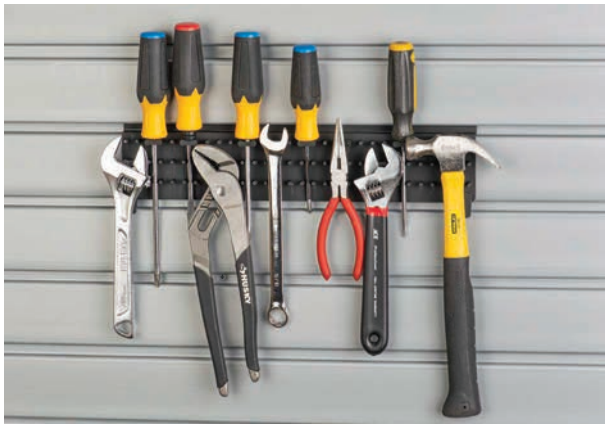

→ Magnetic ToolPAD

> Fits directly onto HandiWALL®
> Color coordinated to blend in perfectly with HandiWALL® panels
> Length: 381 mm (15")
> Material: Plastic

Color	Model No.	Item No.
white	HSMTP15100	792.22.760
taupe	HSMTP15200	792.22.660
gray	HSMTP15300	792.22.560
black	HSMTP15400	792.22.360
maple	HSMTP15500	792.22.160
graphite	HSMTP15130	792.22.460
beachwood	HSMTP15140	792.22.060
silver	HSMTP15150	792.22.960
driftwood	HSMTP15160	792.22.860

Supplied With
6 Magnetic pockets
6 Screwdriver pockets
2 Twist Locks to secure the ToolPAD in place on the HandiWALL®

Note
Pockets can be purchased separately if additional are needed.

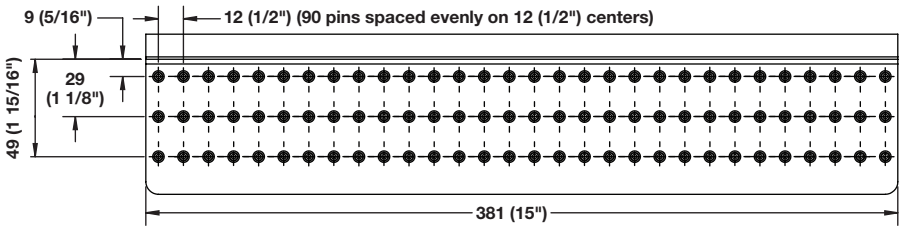

→ Pocket Kits

Version	Model No.	Item No.
Magnetic	HSMTPMPC	792.22.450
Screwdriver	HSMTPSDPC	792.22.451

Supplied With
6 pcs. per kit

Dimensional data not binding. Dimensions in mm, inches are approximate. We reserve the right to alter specifications without notice.

This page is left blank intentionally.

Dimensional data not binding. Dimensions in mm, inches are approximate. We reserve the right to alter specifications without notice.

HandiACCESSORIES™

→ Paper Towel Holder

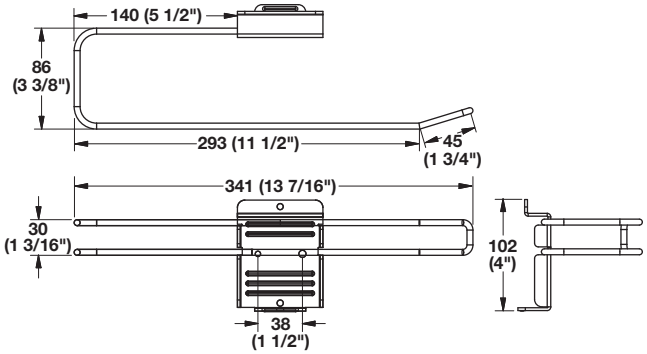

> W x D x H: 341 x 102 x 31 mm (13 7/16" x 4" x 3 3/4")
> Material: Steel; Finish: graphite

Model No.	Item No.
HSPTH	792.14.090

→ Screwdriver Rack

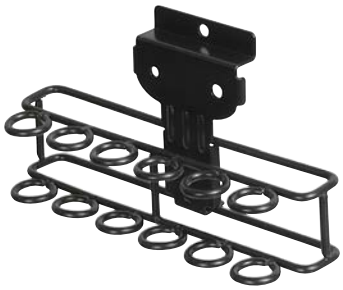

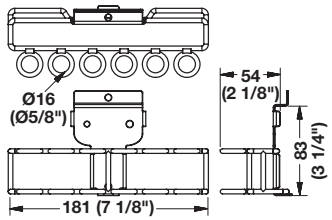

> W x D x H: 181 x 54 x 83 mm (7 1/8" x 2 1/8" x 3 1/4")
> Material: Steel; Finish: graphite

Model No.	Item No.
HSSDHB	792.14.060

→ Multi-Purpose Roll Holder

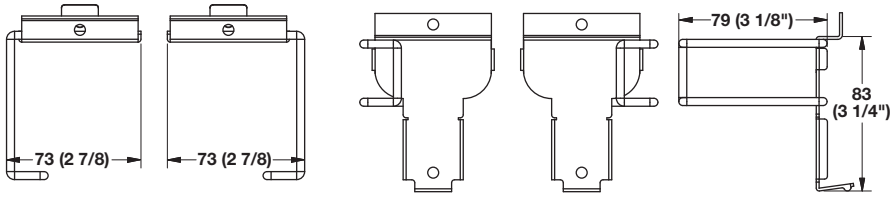

> W x D x H (each): 73 x 79 x 83 mm (2 7/8" x 3 1/8" x 3 1/4")
> Material: Steel; Finish: graphite

Model No.	Item No.
HSMPRH	792.14.080

Dimensional data not binding. Dimensions in mm, inches are approximate. We reserve the right to alter specifications without notice.

HÄFELE

Syzzor Loft

- Designed to eliminate the need for a ladder
- Raise/lower using a hand-crank or drill
- Installed dimensions: D x W: 1.2 x 2.1 m (4' x 7')
- Retraction: 1.8 m (6')
- Weight capacity: 318 kg (700 lbs.)
- No wires or power cables
- Syzzor for stability
- Cable for support
- Material: Steel, powder-coated; Finish: white

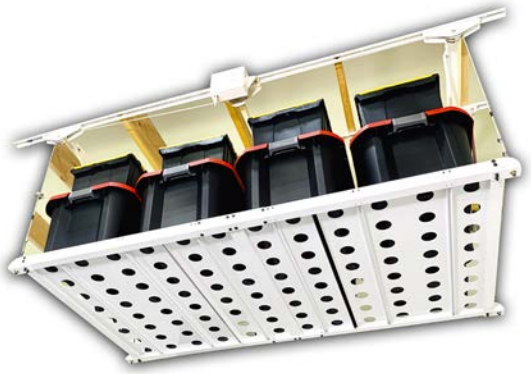

	Item No.
	792.30.000

Supplied With
Hand-crank
Mounting hardware

Note
Totes are not provided and must be purchased separately.

Lowered position (front view)

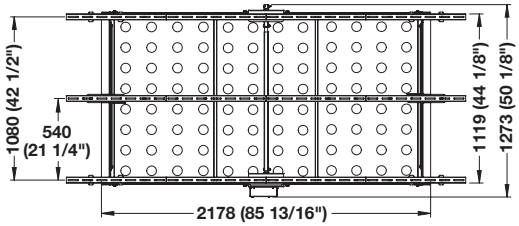

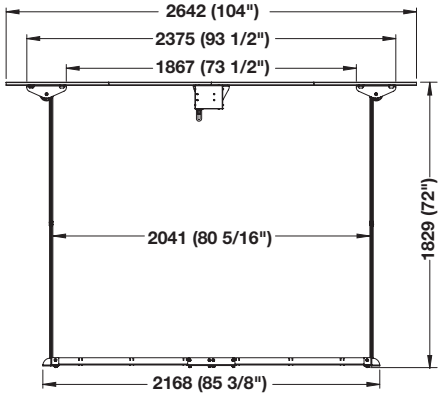

Lowered position (side view)

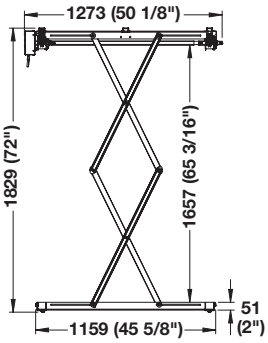

Raised position (front view)

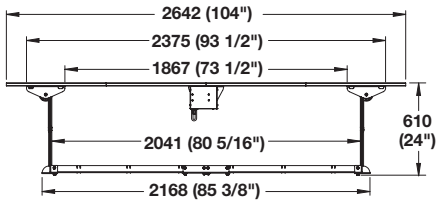

Raised position (side view)

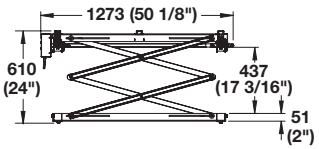

Dimensional data not binding. Dimensions in mm, inches are approximate. We reserve the right to alter specifications without notice.

Super Pro

- > Designed for seamless installation
- > Down-rods can be installed anywhere on the perimeter of the frame, allowing for versatility in the placement and configuration of each unit
- > Installed dimensions: D x W: 1.2 x 2.1 m (4' x 7')
- > Weight capacity: 362.8 kg (800 lbs.)
- > Material: Steel, powder-coated; Finish: white

	Item No.
	792.30.010

Supplied With
Mounting hardware

Note
Totes are not provided and must be purchased separately.

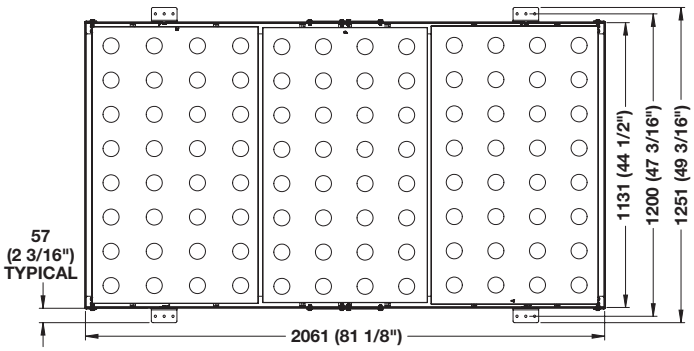

Front view

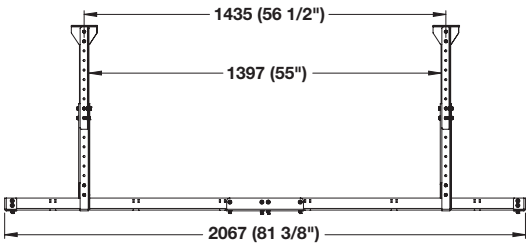

Side view

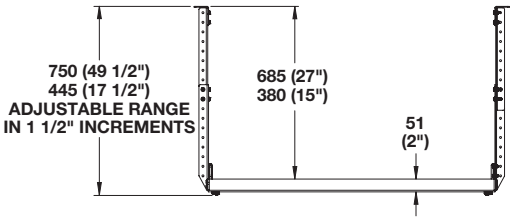

Dimensional data not binding. Dimensions in mm, inches are approximate. We reserve the right to alter specifications without notice.

Coloma

> For contemporary, sleek, European designed closets
> Designs can incorporate drawers and wood or glass shelves

→ Slotted Profile

> Three-way adjustable with the use of wall fasteners and adjustable legs
> Slots are 16 mm (5/8") apart
> D x H: 30 x 2800 mm (1 3/16" x 9' 2 1/4")
> Material: Aluminum

Mounting	Item No.
Between panels	793.00.113
End mounting	793.00.114

→ Wall Fastener, single-sided

> Designed specifically for use with slotted profiles that are mounted in corners or ends
> Unhanded
> Attaches the slotted profile to the wall
> With slotted hole for horizontal adjustment
> Mount a maximum of 610 mm (24") apart
> W x D x H: 60 x 19 x 28 mm (2 3/8" x 3/4" x 1 1/8")
> Material: Steel

Finish	Item No.
zinc-plated	793.00.001

Note
For all slotted profiles.

→ Wall Fastener, double-sided

> Attaches the slotted profile to the wall
> With slotted hole for horizontal adjustment
> Mount a maximum of 610 mm (24") apart
> W x D x H: 75 x 19 x 38 mm (2 15/16" x 3/4" x 1 1/2")
> Material: Aluminum

Finish	Item No.
zinc-plated	793.00.002

Note
For all slotted profiles.

Dimensional data not binding. Dimensions in mm, inches are approximate. We reserve the right to alter specifications without notice.

Coloma

→ Adjustable Leg

> For slotted profile 793.00.113
> Mounts to the bottom of the slotted profile
> Pin holds profile in place
> W x D: 41 x 41 mm (1 5/8" x 1 5/8")
> Height adjustable from: 22-37 mm (7/8"-1 7/16")
> Material: Steel

Finish	Item No.
zinc-plated	793.00.003

> For slotted profile 793.00.114
> Material: Steel

Orientation	Item No.
Right	793.00.129
Left	793.00.130

→ Panel Clip

> Attaches panels to slotted profiles
> Panels must be 19 mm (3/4") thick
> Clips allow back panel to be snapped into place by securing between profiles
> Quick mount with breakaway tabs for alignment
> W x D x H: 35 x 12 x 100 mm (1 3/8" x 1/2" x 4")
> Material: PVC

Color	Item No.
gray	793.00.004

Note
8 clips required per panel; for all slotted profiles.

→ Cover Brush

> Slides into slotted profile to conceal slots
> Width: 2800 mm (9' 2 1/4")

Color	Item No.
gray	793.00.005

Note
For all slotted profiles.

Dimensional data not binding. Dimensions in mm, inches are approximate. We reserve the right to alter specifications without notice.

Coloma

> Brackets mount to slotted profile
> Gives shelves a floating appearance
> Material: Steel, powder-coated; Finish: silver

→ Shelf Bracket Set

> Shelves can be independently adjusted
> Weight capacity: 50 kg (110 lbs.)

Depth	Shelf thickness	Item No.
305 (12")	28.6 (1 1/8")	793.00.401
356 (14")	28.6 (1 1/8")	793.00.413
457 (18")	28.6 (1 1/8")	793.00.425
559 (22")	28.6 (1 1/8")	793.00.437
305 (12")	38 (1 1/2")	793.00.404
356 (14")	38 (1 1/2")	793.00.416
457 (18")	38 (1 1/2")	793.00.428
559 (22")	38 (1 1/2")	793.00.440

→ Bottom Shelf Bracket Set

> Specially designed to utilize space for shelves at the bottom of the closet
> Shelves can be independently adjusted
> Weight capacity: 50 kg (110 lbs.)

Depth	Shelf thickness	Item No.
305 (12")	28.6 (1 1/8")	793.00.400
356 (14")	28.6 (1 1/8")	793.00.412
457 (18")	28.6 (1 1/8")	793.00.424
559 (22")	28.6 (1 1/8")	793.00.436
305 (12")	38 (1 1/2")	793.00.403
356 (14")	38 (1 1/2")	793.00.415
457 (18")	38 (1 1/2")	793.00.427
559 (22")	38 (1 1/2")	793.00.439

Note
Toe kicks should be installed under shelves for additional support.

→ Angled Shelf Bracket Set

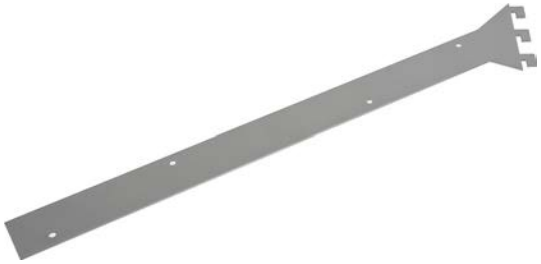

> For shoe shelves
> Depth: 356 mm (14")
> Weight capacity: 50 kg (110 lbs.)

Shelf thickness	Item No.
28.6 (1 1/8")	793.00.127
38 (1 1/2")	793.00.125

Dimensional data not binding. Dimensions in mm, inches are approximate. We reserve the right to alter specifications without notice.

Coloma

> Brackets mount to slotted profile
> Gives shelves and drawers a floating appearance
> Material: Steel, powder-coated; Finish: silver

→ Cabinet Bracket Set

> Specially designed to hold floating cabinets using 28.6 mm (1 1/8") or 38 mm (1 1/2") thick material
> Weight capacity: 60 kg (132 lbs.)

Depth	Shelf thickness	Silver
305 (12")	28.6 (1 1/8")	793.00.402
356 (14")	28.6 (1 1/8")	793.00.414
457 (18")	28.6 (1 1/8")	793.00.426
559 (22")	28.6 (1 1/8")	793.00.438
305 (12")	38 (1 1/2")	793.00.405
356 (14")	38 (1 1/2")	793.00.417
457 (18")	38 (1 1/2")	793.00.429
559 (22")	38 (1 1/2")	793.00.441

Note
Use two sets to double the weight capacity.
Cannot be combined with the Concealed Cabinet Bracket Set.

→ Screw for Coloma Brackets

Phillips Drive

> For attaching Coloma shelf and cabinet brackets
> Length: #6 x 30 mm (1 3/16")
> Material: Steel

Finish	Item No.
zinc-plated	010.09.906

→ Concealed Cabinet Bracket Set

> Attaches to the back of the cabinet and is not visible
> Weight capacity: 50 kg (110 lbs.)
> Height: 120 mm (4 3/4")

	Item No.
	793.00.448

Note
Use two sets to double the weight capacity.
Cannot be combined with the Cabinet Bracket Set.

→ Glass Shelf Bracket Set

> For glass thickness from 4-10 mm (3/16"-3/8")
> Weight capacity: 45 kg (100 lbs.)
> H x D: 81 x 127 mm (3 3/16" x 5")

	Item No.
	793.00.450

Dimensional data not binding. Dimensions in mm, inches are approximate. We reserve the right to alter specifications without notice.

HÄFELE

Shoptec

> Heavy duty
> Single slot design
> Adjustable in 50 mm (2") increments
> 12 gauge steel
> ANSI/BHMA 156.9-2003 Grade 2 Compliant
> Weight capacity: max. 425 lbs./pair

→ Single Standards

Flat Head #10

> W x D: 22 x 12 mm (7/8" x 11/16")
> Material: Steel; Finish: zinc-plated

Length	Item No.
610 (24")	774.10.601
915 (36")	774.10.603
1219 (48")	774.10.605
1524 (60")	774.10.606
1829 (72")	774.10.608
2134 (84")	774.10.610
2438 (96")	774.10.612

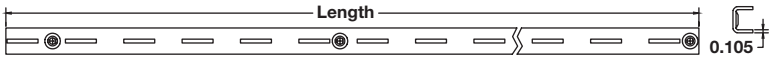

→ Brackets

> Three lug design adds support
> Cam lock secures bracket to standard
> Material: Steel; Finish: zinc-plated

Length	Item No.
305 (12")	774.11.606
356 (14")	774.11.608
406 (16")	774.11.610
457 (18")	774.11.611
508 (20")	774.11.613
559 (22")	774.11.614
610 (24")	774.11.615

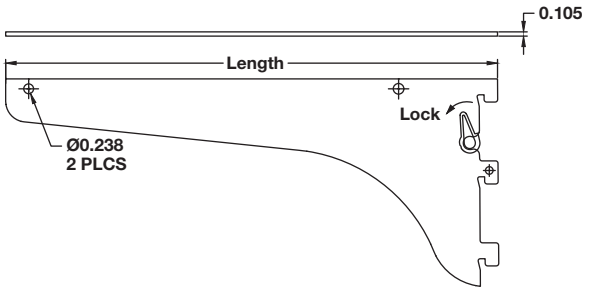

Flat head screws pages 12.7–12.8, 12.10, 12.13

Dimensional data not binding. Dimensions in mm, inches are approximate. We reserve the right to alter specifications without notice.

Shoptec

> Heavy duty
> Double slot design
> Adjustable in 25 mm (1") increments
> 16 gauge steel
> ANSI/BHMA 156.9-2003 Grade 2 Compliant
> Weight capacity: max. 425 lbs./pair

→ Double Standards

Flat Head #10

> W x D: 32 x 12 mm (1 1/4" x 1/2")
> Material: Steel; Finish: zinc-plated

Length	Item No.
610 (24")	774.10.621
915 (36")	774.10.623
1219 (48")	774.10.625
1524 (60")	774.10.626
1829 (72")	774.10.628
2134 (84")	774.10.630
2438 (96")	774.10.632

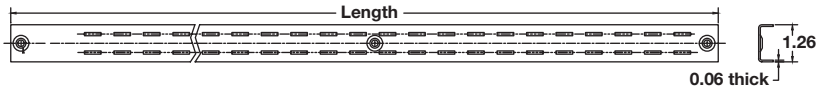

→ Brackets

Pan Head #10

> Double lug design provides secure support
> Material: Steel; Finish: zinc-plated

Length	Item No.
203 (8")	774.11.622
254 (10")	774.11.624
305 (12")	774.11.626
356 (14")	774.11.629
406 (16")	774.11.630
457 (18")	774.11.631
508 (20")	774.11.633
559 (22")	774.11.634
610 (24")	774.11.635

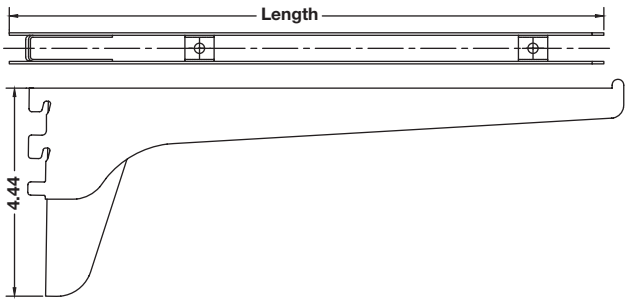

Flat head screws	pages 12.7–12.8, 12.10, 12.13
Pan head screws	pages 12.9–12.10

Dimensional data not binding. Dimensions in mm, inches are approximate. We reserve the right to alter specifications without notice.

Shoptec

> Heavy duty
> Double slot design
> Adjustable in 25 mm (1") increments
> 14 gauge steel
> ANSI/BHMA 156.9-2003 Grade 2 Compliant
> Weight capacity: max. 425 lbs./pair

→ Premium Double Standards

Flat Head #12

> W x D: 27 x 17.5 mm (1 1/16" x 11/16")
> Material: Steel; Finish: white

Length	Item No.
419 (16 1/2")	774.10.640
711 (28")	774.10.642
991 (39")	774.10.644
1219 (48")	774.10.645
1600 (63")	774.10.647
1981 (78")	774.10.649
2388 (94")	774.10.651

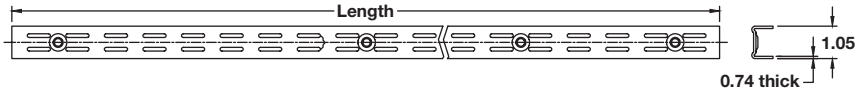

→ Premium Brackets

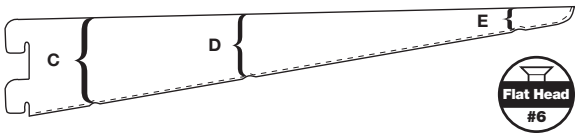

> Double lug design provides secure support
> Material: Steel; Finish: white

Length	Shelf depth	C	D	E	Item No.
267 (10 1/2")	305 (12")	–	36 (1 7/16")	12 (1/2")	774.11.645
318 (12 1/2")	356 (14")	–	36 (1 7/16")	12 (1/2")	774.11.647
368 (14 1/2")	406 (16")	–	65 (2 1/2")	19 (3/4")	774.11.649
470 (18 1/2")	508 (20")	72 (2 7/8")	41 (1 3/4")	16 (5/8")	774.11.652
622 (24 1/2")	610 (24")	70 (2 3/4")	40 (1 5/8")	15 (9/16")	774.11.656

Flat head screws pages 12.7–12.8, 12.10, 12.13

Dimensional data not binding. Dimensions in mm, inches are approximate. We reserve the right to alter specifications without notice.

Shoptec

> Heavy duty
> Adjustable in 12 mm (1/2") increments
> Stamped numbers for easy installation
> Pre-punched staple holes
> Pre-drilled screw holes
> ANSI/BHMA 156.9-2003 Grade 2 Compliant
> Weight capacity: max. 100 lbs./pair

→ Pilaster Standards

Flat Head #4

> 21 gauge steel
> W x D: 16 x 5 mm (5/8" x 3/16")
> Material: Steel; Finish: zinc-plated

Length	Item No.
305 (12")	283.18.921
356 (18")	283.18.922
610 (24")	283.18.923
762 (30")	283.18.924
915 (36")	283.18.925
1219 (48")	283.18.927
1524 (60")	283.18.928
1829 (72")	283.18.929
2134 (84")	283.18.930
2438 (96")	283.18.931

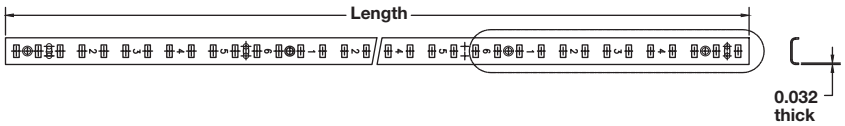

→ Pilaster Supports

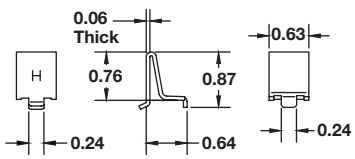

> 16 gauge steel
> Material: Steel

Finish	Item No.
zinc-plated	283.18.990

→ Nails for Pilaster Supports

> Material: Steel

Finish	Item No.
zinc-plated	283.19.999

Flat head screws pages 12.7–12.8, 12.10, 12.13

Dimensional data not binding. Dimensions in mm, inches are approximate. We reserve the right to alter specifications without notice.

KV

- > Regular duty
- > Single slot design
- > Adjustable in 1" increments
- > RoHS compliant
- > Made in USA
- > Weight capacity: up to 145 kg (320 lbs.)/pair*

***Note**
Proper installation and mounting required. Tested to meet or exceed ANSI/BHMA 156.9-2003 performance standards. Weight limits are based on standards mounted on 16" centers and are intended for use as general guidelines only. No warranty, expressed or implied, supplied by Häfele.

→ 80 Series Standards

Flat Head #6

- > 16 gauge steel
- > W x D: 16 x 10 mm (5/8" x 13/32")
- > Material: Steel; Finish: anochrome

Length	KV Model No.	Item No.
610 (24")	80 ANO 24	774.20.223
914 (36")	80 ANO 36	774.20.224
1219 (48")	80 ANO 48	774.20.225
1524 (60")	80 ANO 60	774.20.226
1829 (72")	80 ANO 72	774.20.227
2438 (96")	80 ANO 96	774.20.229

Note
Screws are not included.

→ 180 Series Brackets

- > 102–305 mm (4"–12") brackets: 16 gauge steel
  356–508 mm (14"–20") brackets: 14 gauge steel
- > Reinforced brackets provide strong, secure weight-bearing support with stabilizing spring clip
- > Material: Steel; Finish: anochrome

Length	KV Model No.	Item No.
152 (6")	180 ANO 6	774.23.281
203 (8")	180 ANO 8	774.23.282
254 (10")	180 ANO 10	774.23.283
305 (12")	180 ANO 12	774.23.284
356 (14")	180 ANO 14	774.23.285
406 (16")	180 ANO 16	774.23.286
457 (18")	180 ANO 18	774.23.287
508 (20")	180 ANO 20	774.23.288

Flat head screws pages 12.7–12.8, 12.10, 12.13

Dimensional data not binding. Dimensions in mm, inches are approximate. We reserve the right to alter specifications without notice.

KV

> Heavy duty
> Double slot design
> Adjustable in 1 1/4" increments
> RoHS compliant
> Made in USA
> Weight capacity: up to 205 kg (450 lbs.)/pair*

***Note**
Proper installation and mounting required. Tested to meet or exceed ANSI/BHMA 156.9-2003 performance standards. Weight limits are based on standards mounted on 16" centers and are intended for use as general guidelines only. No warranty, expressed or implied, supplied by Häfele.

→ 82 Series Standards

Flat Head #12

> 14 gauge steel
> W x D: 27 x 18 mm (1 1/16" x 11/16")
> Material: Steel; Finish: white

Length	KV Model No.	Item No.
419 (16.5")	82 WH 16.5	774.21.700
711 (28")	82 WH 28	774.21.702
991 (39")	82 WH 39	774.21.704
1219 (48")	82 WH 48	774.21.705
1600 (63")	82 WH 63	774.21.707
1981 (78")	82 WH 78	774.21.709
2388 (94")	82 WH 94	774.21.711

Note
Screws are not included.

→ 182 Series Brackets

Flat Head #6

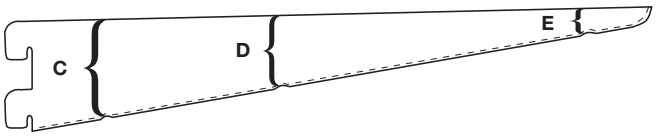

> 16 gauge steel
> Smooth, rounded corners for a soft, less intrusive appearance
> Recessed groove design provides a streamlined surface where the bracket and standard meet
> Double-lug brackets provide strong, secure weight-bearing support and help prevent shelves and contents from falling if bumped
> Material: Steel; Finish: white

Length	Shelf depth	C	D	E	KV Model No.	Item No.
267 (10 1/2")	305 (12")	-	36 (1 7/16")	12 (1/2")	182 WH 10.5	774.25.703
318 (12 1/2")	356 (14")	-	36 (1 7/16")	12 (1/2")	182 WH 12.5	774.25.704
368 (14 1/2")	406 (16")	-	65 (2 1/2")	19 (3/4")	182 WH 14.5	774.25.705
470 (18 1/2")	508 (20")	72 (2 7/8")	41 (1 3/4")	16 (5/8")	182 WH 18.5	774.25.706
610 (24")	610 (24")	70 (2 3/4")	40 (1 5/8")	15 (9/16")	182 WH 24	774.25.707

Flat head screws pages 12.7–12.8, 12.10, 12.13

Dimensional data not binding. Dimensions in mm, inches are approximate. We reserve the right to alter specifications without notice.

KV

> Heavy duty
> Single slot design
> Adjustable in 1" increments
> RoHS compliant
> Made in USA
> Weight capacity: up to 209 kg (460 lbs.)/pair*

***Note**
Proper installation and mounting required. Tested to meet or exceed ANSI/BHMA 156.9-2003 performance standards. Weight limits are based on standards mounted on 16" centers and are intended for use as general guidelines only. No warranty, expressed or implied, supplied by Häfele.

→ 83 Series Standards

Flat Head #7

> 16 gauge steel
> W x D: 19 x 12 mm (3/4" x 1/2")
> Material: Steel; Finish: anochrome

Length	KV Model No.	Item No.
610 (24")	83 ANO 24	774.20.243
914 (36")	83 ANO 36	774.20.244
1219 (48")	83 ANO 48	774.20.245
1524 (60")	83 ANO 60	774.20.246
1829 (72")	83 ANO 72	774.20.247
2134 (84")	83 ANO 84	774.20.248
2438 (96")	83 ANO 96	774.20.249

Note
Screws are not included.

→ 183 Series Brackets

Left Flange

Right Flange

Center Flange

> 16 gauge steel
> Flanges include keyhole style mounting holes to make attachment of wood shelves quick and simple
> Center flanged brackets are used to join two shelves together
> Material: Steel; Finish: anochrome

Pan Head #10

	Left flange		Right flange		Center flange	
Length	KV Model No.	Item No.	KV Model No.	Item No.	KV Model No.	Item No.
203 (8")	183L ANO 8	774.25.222	183R ANO 8	774.25.212	183C ANO 8	774.25.232
254 (10")	183L ANO 10	774.25.223	183R ANO 10	774.25.213	–	–
305 (12")	183L ANO 12	774.25.224	183R ANO 12	774.25.214	183C ANO 12	774.25.234
356 (14")	183L ANO 14	774.25.225	183R ANO 14	774.25.215	183C ANO 14	774.25.235
406 (16")	183L ANO 16	774.25.226	183R ANO 16	774.25.216	183C ANO 16	774.25.236
457 (18")	183L ANO 18	774.25.227	183R ANO 18	774.25.217	183C ANO 18	774.25.237
508 (20")	183L ANO 20	774.25.228	183R ANO 20	774.25.218	183C ANO 20	774.25.238

Flat head screws	pages 12.7–12.8, 12.10, 12.13
Pan head screws	pages 12.9–12.10

Dimensional data not binding. Dimensions in mm, inches are approximate. We reserve the right to alter specifications without notice.

KV

- > Heavy duty
- > Double slot design
- > Adjustable in 26 mm (1") increments
- > RoHS compliant
- > Made in USA
- > Weight capacity: up to 308 kg (680 lbs.)/pair*

***Note**
Proper installation and mounting required. Tested to meet or exceed ANSI/BHMA 156.9-2003 performance standards. Weight limits are based on standards mounted on 406 mm (16") centers and are intended for use as general guidelines only. No warranty, expressed or implied, supplied by Häfele.

→ 85 Series Standards

Flat Head #10

- > 16 gauge steel
- > All KV 1" adjustable brackets can be used with these standards
- > W x D: 32 x 12 mm (1 1/4" x 1/2")
- > Material: Steel; Finish: anochrome

Length	KV Model No.	Item No.
610 (24")	85 ANO 24	774.21.221
915 (36")	85 ANO 36	774.21.223
1219 (48")	85 ANO 48	774.21.225
1524 (60")	85 ANO 60	774.21.226
1829 (72")	85 ANO 72	774.21.228
2134 (84")	85 ANO 84	774.21.230
2438 (96")	85 ANO 96	774.21.231

Note
Screws are not included.

→ 185 Series Brackets

Pan Head #10

- > 203–305 mm (8"–12") brackets: 16 gauge steel
  356–610 mm (14"–24") brackets: 14 gauge steel
- > Double-lug brackets provide strong, secure weight-bearing support and help prevent shelves and contents from falling if bumped
- > Material: Steel; Finish: anochrome

Length	KV Model No.	Item No.
203 (8")	185 ANO 8	774.24.222
254 (10")	185 ANO 10	774.24.223
305 (12")	185 ANO 12	774.24.224
356 (14")	185 ANO 14	774.24.225
406 (16")	185 ANO 16	774.24.226
457 (18")	185 ANO 18	774.24.227
508 (20")	185 ANO 20	774.24.228
559 (22")	185 ANO 22	774.24.229
610 (24")	185 ANO 24	774.24.230

Flat head screws	pages 12.7–12.8, 12.10, 12.13
Pan head screws	pages 12.9–12.10

Dimensional data not binding. Dimensions in mm, inches are approximate. We reserve the right to alter specifications without notice.

KV

> Super duty
> KV 87 series standards, 186 and 187 brackets
> Single slot design
> Adjustable in 2" increments
> RoHS compliant
> Made in USA
> Weight capacity: up to 481 kg (1060 lbs.)/pair*

***Note**
Proper installation and mounting required. Tested to meet or exceed ANSI/BHMA 156.9-2003 performance standards. Weight limits are based on standards mounted on 406 mm (16") centers and are intended for use as general guidelines only. No warranty, expressed or implied, supplied by Häfele.

→ 87 Series Standards

Flat Head #10

> 12 gauge steel
> W x D: 22 x 12 mm (7/8" x 11/16")
> Material: Steel; Finish: anochrome

Length	KV Model No.	Item No.
610 (24")	87 ANO 24	774.20.263
915 (36")	87 ANO 36	774.20.264
1219 (48")	87 ANO 48	774.20.265
1524 (60")	87 ANO 60	774.20.266
1829 (72")	87 ANO 72	774.20.267
2134 (84")	87 ANO 84	774.20.268
2438 (96")	87 ANO 96	774.20.269

Note
Screws are not included.

→ 186 and 187 Series Brackets

186 Series

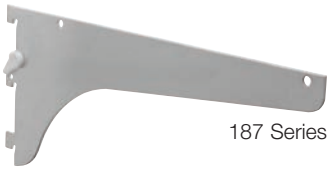

187 Series

> 12 gauge steel
> Nylon cam lock lever allows for easy installation while securing bracket to standard
> 187 brackets include 3 lugs for additional support
> Material: Steel; Finish: anochrome

Length	KV Model No.	Item No.
203 (8")	186LL ANO 8	774.24.242
254 (10")	186LL ANO 10	774.24.243
305 (12")	187LL ANO 12	774.24.264
356 (14")	187LL ANO 14	774.24.265
406 (16")	187LL ANO 16	774.24.266
457 (18")	187LL ANO 18	774.24.267
508 (20")	187LL ANO 20	774.24.268
559 (22")	187LL ANO 22	774.24.269
610 (24")	187LL ANO 24	774.24.270

Note
Screws are not included.

→ 186 and 187 Accessories

Shelf Cushion

End Shelf Rest

Center Shelf Rest

Front Shelf Rest anochrome

Front Shelf Rest zinc

Pan Head #6

Description	KV model No.	Material	Finish	Item No.
Shelf cushion	129 RUB	Rubber	gray	774.26.470
End shelf rest	210 ANO	Steel	anochrome	774.26.281
Center shelf rest	211 ANO	Steel	anochrome	774.26.282
Front shelf rest	212 ANO	Steel	anochrome	774.26.283
Front shelf rest	213C ZC	Steel	zinc	774.26.990

Flat head screws	pages 12.7–12.8, 12.10, 12.13
Pan head screws	pages 12.9–12.10

Dimensional data not binding. Dimensions in mm, inches are approximate. We reserve the right to alter specifications without notice.

KV

> Heavy duty
> Adjustable in 12 mm (1/2") increments
> BHMA Grade 1 compliant
> For surface or flush mounted applications
> Made in USA
> Weight capacity: up to 227 kg (500 lbs.)/pair*

***Note**
Proper installation and mounting required. Tested to meet or exceed ANSI/BHMA 156.9-2003 performance standards. Weight limits are based on standards mounted on 406 mm (16") centers and are intended for use as general guidelines only. No warranty, expressed or implied, supplied by Häfele.

→ 255 Series Pilaster Standards

> 23 gauge high strength steel
> Stamped numbers make installation easier
> Pre-drilled screw/nail holes
> Pre-punched staple holes
> W x D: 16 x 5 mm (5/8" x 3/16")
> Material: Steel; Finish: zinc

Length	KV Model No.	Item No.
305 (12")	255 ZC 12	283.18.901
356 (18")	255 ZC 18	283.18.902
610 (24")	255 ZC 24	283.18.903
762 (30")	255 ZC 30	283.18.904
915 (36")	255 ZC 36	283.18.905
1219 (48")	255 ZC 48	283.18.907
1524 (60")	255 ZC 60	283.18.908
1829 (72")	255 ZC 72	283.18.909
2134 (84")	255 ZC 84	283.18.910
2438 (96")	255 ZC 96	283.18.911

Note
Mounting hardware is not included.

→ 256 Series Pilaster Supports for 255 Pilaster Standards

> Material: Steel

Finish	KV Model No.	Item No.
zinc	256 ZC	283.19.983

→ Nails for 255 Pilaster Standards

> Material: Steel

Finish	KV Model No.	Item No.
zinc	255-81N ZC	283.19.999

Supplied With
650 Nails

Dimensional data not binding. Dimensions in mm, inches are approximate. We reserve the right to alter specifications without notice.

→ Wire Divider, rectangular

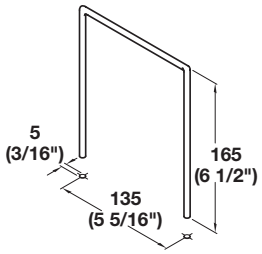

> Material: Steel

Finish	Item No.
chrome	771.80.208

→ Wire Divider, slanted

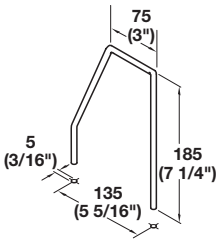

> Material: Steel

Finish	Item No.
chrome	771.80.253
black	771.80.351

→ Speaker/Acoustical Cloth

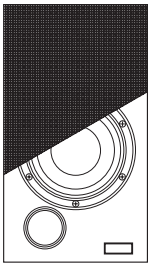

> Encloses speaker
> Fabric cover tack borders
> Acoustically transparent fabric will not distort sound
> Can be cut-to-size by customer
> W x D: 914 x 610 mm (36" x 24")
> Material: Polyester

Color	Item No.
black	811.07.300

Dimensional data not binding. Dimensions in mm, inches are approximate. We reserve the right to alter specifications without notice.

Full Extension TV Swivels

→ Extension Swivel

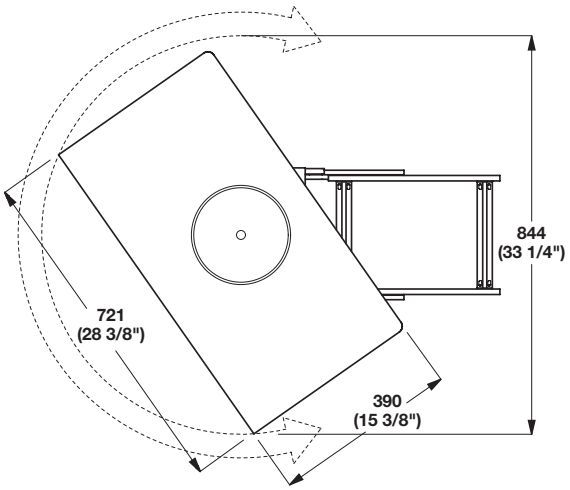

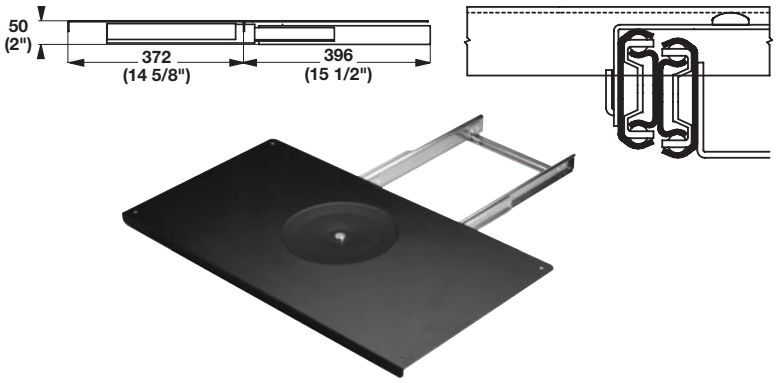

> Full size platform is included
> Pull-out strip for easy operation
> Pivot range: 180°
> Weight capacity: 60 kg (132 lbs.)
> Material: Slides: Steel, galvanized; Platform: Steel

Finish	Item No.
black	423.93.310

Note
Depending on installation and where load is actually placed, the weight rating can change (leverage effect). For commercial use, please conduct your own test.

→ Accuride

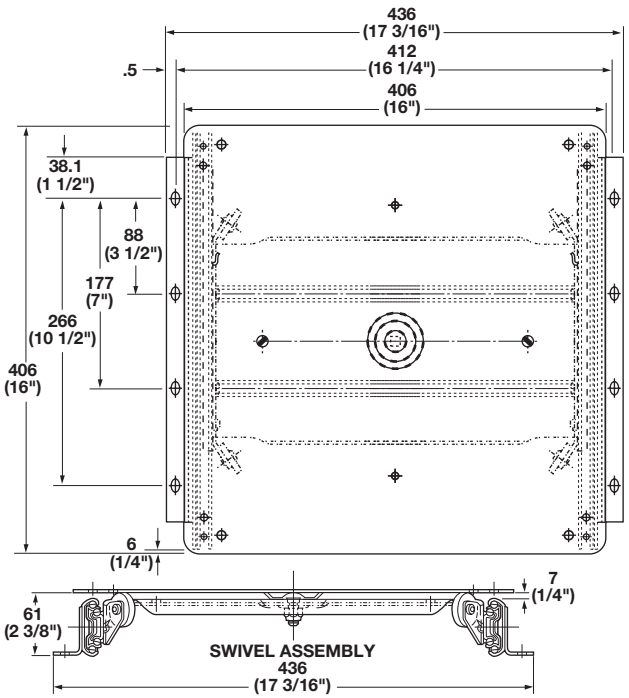

CB3620-258TV

> For TVs up to 36" diagonal max.
> Sturdy support brackets provide maximum stability, even at maximum extension
> Support rollers reduce unwanted rocking
> Bracket mounted; slide members rest on the cabinet
> Rotation: 360°
> Hold-in detent
> Silenced stops, in and out
> Travel: 356 mm (14"); Height: 62 mm (2 7/16")
> Plate: 406 x 406 mm (16" x 16")
> Weight capacity: max. 102 kg (225 lbs.), including shelf
> Material: Steel

Finish	Item No.
black	423.91.300

Supplied With
Mounting hardware

Dimensional data not binding. Dimensions in mm, inches are approximate. We reserve the right to alter specifications without notice.

HÄFELE

Motorized

- > The compact design is perfect for light duty applications in end-of-bed units, kitchen cabinets, conference tables, desks and other types of furniture where space is limited
- > Built-in height: 498 mm (19 5/8")
- > Thickness: 51 mm (2")
- > Stroke: approximately 596 mm (23 1/2")
- > Accommodates TVs up to 1016 mm (40") diagonal
- > The unit features a finished back with no visible screw holes or mechanical features, making it an appealing choice for applications where the lift will be seen from behind
- > Each lift comes with anti-squeeze technology that stops all motion upon encountering an object
- > IR remote operation is also available
- > Mounting brackets cover a range of VESA standards: 200 x 200, 100 x 200 & 100 x 100
- > Weight capacity: 11 kg (25 lbs.)
- > Material: Steel, powder-coated; Finish: black

→ Lift

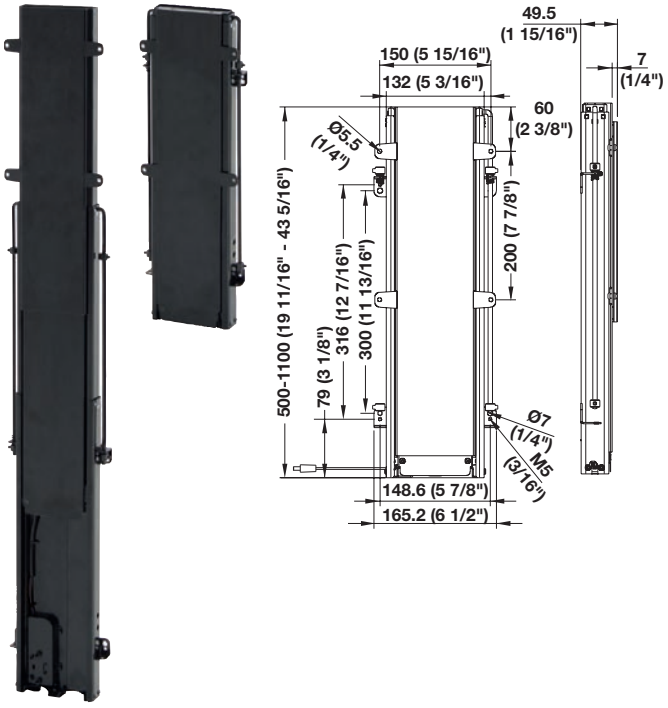

	Item No.
	421.68.510

Supplied With
Mounting brackets
Radio frequency remote
Rocker switch
Power supply

Note
IR remote operation is available.

→ Infrared Conversion Set

	Item No.
	421.68.518

Dimensional data not binding. Dimensions in mm, inches are approximate. We reserve the right to alter specifications without notice.

Motorized

> For computer monitors and flat panel TVs
> Simple and fast mounting
> Rack & Pinion design with unique stability system
> Handles most computer monitors and TVs up to 660 mm (26")
> Travel: 457 mm (18")
> Weight capacity: 50 kg (110 lbs.) mounted vertically
23 kg (50 lbs.) mounted horizontally
> Material: Steel; Finish: silver

→ Lift

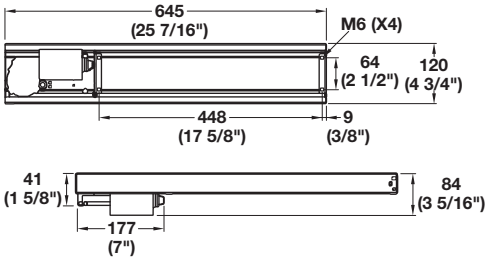

	Item No.
	421.68.441

Supplied With
Radio frequency remote control

→ Mounting Bracket

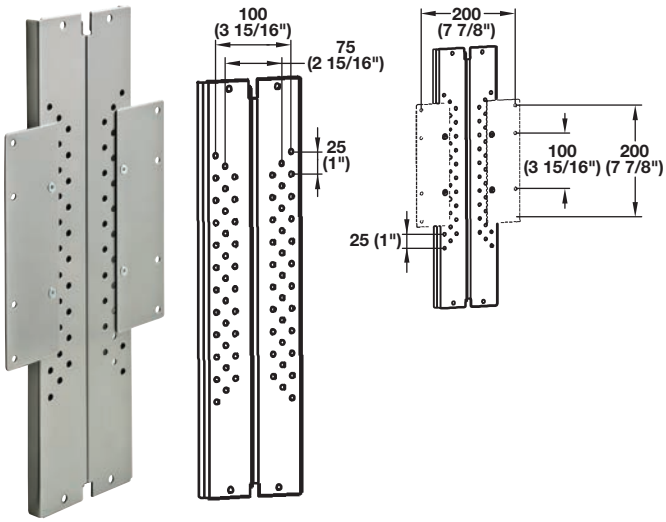

> Offers mounting flexibility by allowing numerous hole combinations
> VESA compliant

	Item No.
	421.68.442

Supplied With
2 Brackets

Dimensional data not binding. Dimensions in mm, inches are approximate. We reserve the right to alter specifications without notice.

HÄFELE

Motorized Flat Panel

> Simple and fast mounting
> Rack & Pinion design with unique stability system
> Universal mounting brackets
> Plug and Play electrical connections
> Wireless remote control operation and wired switch
> Height adjustable Lid Lifter
> Travel speed: 1.11" per second
> Manufacturers warranty: 5 yrs.; 2 yrs. on electrical components
> Material: Steel; Finish: black

→ Lift

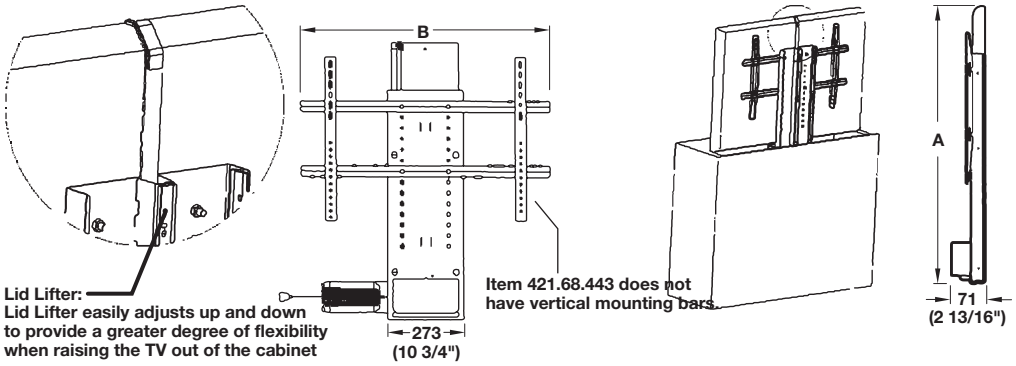

> Anti-pinch
> Adjustable travel stops
> Weight capacity: 66 kg (145 lbs.)
> Weight capacity is reduced to 29 kg (64 lbs.) when the lift is inverted

Max. TV/ Diagonal	Travel	A	B	Item No.
1168 (46")	698 (27 1/2")	600 (23 5/8")	432 (17")	421.68.443
1651 (65")	1001 (39 1/4")	750 (29 1/2")	762 (30")	421.68.444

Supplied With
Universal mounting brackets
Radio frequency remote
Power supply
Wired switch

Dimensional data not binding. Dimensions in mm, inches are approximate. We reserve the right to alter specifications without notice.

Digital Keypad Safe

- > Perfect for the closet
- > Designed to fit within a standard (W x D) 475 x 356 mm (18" x 14") opening
- > Electronic keypad accepts a customized 3-6 digit access code and features a master code option
- > Emergency keys (2) are included in case battery power is lost or the access code is forgotten
- > Includes mounting holes so the safe can be anchored securely to a wall or shelf
- > Fixed shelf inside for optimal storage
- > Strong, durable steel construction; 2 mm (1/16") thick sides, 5 mm (3/16") thick door
- > W x D x H: *Outside: 406 x 330 x 302 mm (16" x 13" x 11 7 /8")
  Inside: 394 x 254 x 292 mm (15 1/2" x 10" x 11 1/2")
- > Weight: 14 kg (31 lbs.)
- > Material: Steel, powder-coated; Finish: black

Note
*Outside depth includes keypad.
Requires 4 AA batteries (not supplied).

→ Safe

	Item No.
	836.21.351

Dimensional data not binding. Dimensions in mm, inches are approximate. We reserve the right to alter specifications without notice.

TAG

Häfele's entire line of TAG Hardware components perfectly complements one another in any project. No one else offers the closet industry this wide a range of products designed to match one another in form, function and fashion. Your customers expect the finish of the shoe fence they select will match perfectly the finish of the scarf rack, tie rack or the valet pin. The TAG Hardware Symphony Wall Mount Organizer elevates storage to the level of functional art while the TAG Hardware Illuminated Shelf — powered by Häfele's Loox LED lighting — adds visual appeal and brilliance to any space. TAG Hardware has even extended perfect matching to their knobs and pulls completing a look in closet design as flawlessly coordinated as their favorite outfit.

Dimensional data not binding. Dimensions in mm, inches are approximate. We reserve the right to alter specifications without notice.

TAG Symphony

- A wide range of widths and heights for various applications
- Smaller sizes are ideal for partitions or a closet back panel
- Bold metal finishes and soft faux leather options
- Comprised of mixed materials, adding texture and dimension to the aesthetic design
- Hooks can be placed anywhere along the horizontal bars and can easily be reconfigured to adapt to changing storage needs
- Attaches into drywall or a vertical panel; no studs required

→ Metal

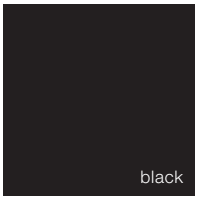

→ Leather

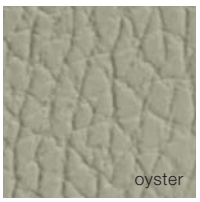

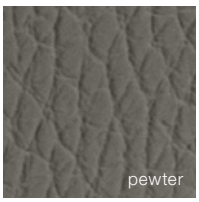

Scan the QR image for design tips and inspiration.

Dimensional data not binding. Dimensions in mm, inches are approximate. We reserve the right to alter specifications without notice.

HÄFELE

TAG Symphony

> A single bar system that is the most versatile of all the Symphony products - ideally suited to add hanging options almost anywhere in the home
> Add to a closet partition or above a counter or table or install in the mudroom or entry to hang keys, purses and dog leashes
> Perfect as a clean array of coat hooks behind a door or for organizing jewelry between upper and lower cabinets
> Weight capacity: max. 44 kg (20 lbs.)

→ Solo

> Height: 38 mm (1 1/2")
> Material: Aluminum/Faux Leather

		Width			
Metal finish	**Leather color**	**342 (13 1/2")**	**584 (23")**	**889 (35")**	**1194 (47")**
matt nickel	oyster	807.72.080	807.72.081	807.72.082	807.72.083
	winter	807.72.280	807.72.281	807.72.282	807.72.283
	pewter	807.72.180	807.72.181	807.72.182	807.72.183
matt aluminum	oyster	807.72.070	807.72.071	807.72.072	807.72.073
	winter	807.72.270	807.72.271	807.72.272	807.72.273
	pewter	807.72.170	807.72.171	807.72.172	807.72.173
slate gray	oyster	807.72.380	807.72.381	807.72.382	807.72.383
	winter	807.72.580	807.72.581	807.72.582	807.72.583
	pewter	807.72.480	807.72.481	807.72.482	807.72.483
matt gold	oyster	807.72.670	807.72.671	807.72.672	807.72.673
	winter	807.72.870	807.72.871	807.72.872	807.72.873
	pewter	807.72.770	807.72.771	807.72.772	807.72.773
black	oyster	807.72.370	807.72.371	807.72.372	807.72.373
	winter	807.72.570	807.72.571	807.72.572	807.72.573
	pewter	807.72.470	807.72.471	807.72.472	807.72.473
Recommended # of Hooks		2	3	4	5

Supplied With
1 horizontal bar, 2 mounts, Mounting hardware

Note
Order hooks separately, see pages **4.77–4.77A**.

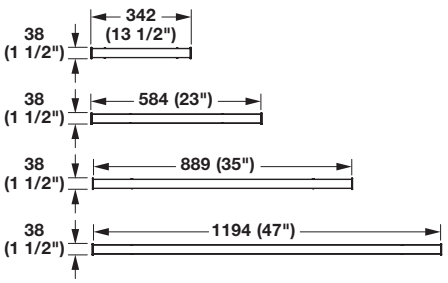

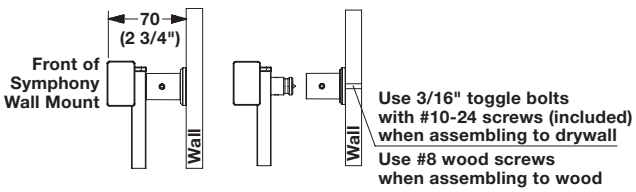

Dimensional data not binding. Dimensions in mm, inches are approximate. We reserve the right to alter specifications without notice.

TAG Symphony

> The double bar configuration provides ample space for a guest entryway, behind an office door or as additional hanging storage in a bedroom
> The Duet can be mounted lower on the wall as a stand-alone shoe rack or add another Duet above for backpacks and jackets
> Weight capacity: max. 22.7 kg (50 lbs.) per horizontal bar and max. 90 kg (200 lbs.) total for a system, evenly distributed

→ Duet

> Height: 190 mm (7 1/2")
> Material: Aluminum/Faux Leather

		Width			
Metal finish	**Leather color**	**342 (13 1/2")**	**584 (23")**	**889 (35")**	**1194 (47")**
matt nickel	oyster	807.74.084	807.74.085	807.74.086	807.74.087
	winter	807.74.284	807.74.285	807.74.286	807.74.287
	pewter	807.74.184	807.74.185	807.74.186	807.74.187
matt aluminum	oyster	807.74.074	807.74.075	807.74.076	807.74.077
	winter	807.74.274	807.74.275	807.74.276	807.74.277
	pewter	807.74.174	807.74.175	807.74.176	807.74.177
slate gray	oyster	807.74.384	807.74.385	807.74.386	807.74.387
	winter	807.74.584	807.74.585	807.74.586	807.74.587
	pewter	807.74.484	807.74.485	807.74.486	807.74.487
matt gold	oyster	807.74.674	807.74.675	807.74.676	807.74.677
	winter	807.74.874	807.74.875	807.74.876	807.74.877
	pewter	807.74.774	807.74.775	807.74.776	807.74.777
black	oyster	807.74.374	807.74.375	807.74.376	807.74.377
	winter	807.74.574	807.74.575	807.74.576	807.74.577
	pewter	807.74.474	807.74.475	807.74.476	807.74.477
Recommended # of Hooks		3	4	5	6

Supplied With
2 horizontal bars, 2 vertical mounts, Mounting hardware

Note
Order hooks and accessories separately, see pages **4.77–4.77C**.

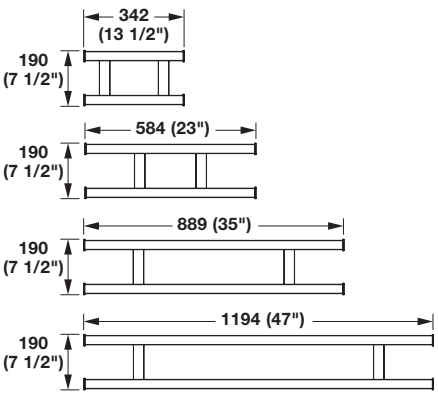

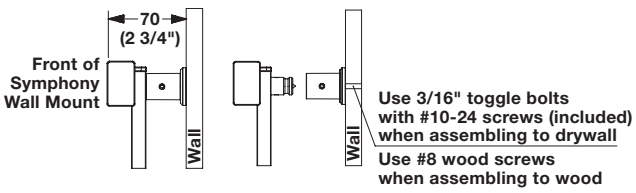

Dimensional data not binding. Dimensions in mm, inches are approximate. We reserve the right to alter specifications without notice.

HÄFELE

TAG Symphony

> The Duet Surface Mount is mounted directly to the desktop creating an integral component to the work area
> Add any of the Symphony multi-purpose hooks and storage accessories, to create the perfect organizational functionality in a home office, craft room or vanity area
> The Duet is the recommended model for most surface mount installations
> Weight capacity: max. 22.7 kg (50 lbs.) per horizontal bar and max. 90 kg (200 lbs.) total for a system, evenly distributed

→ Duet Surface Mount

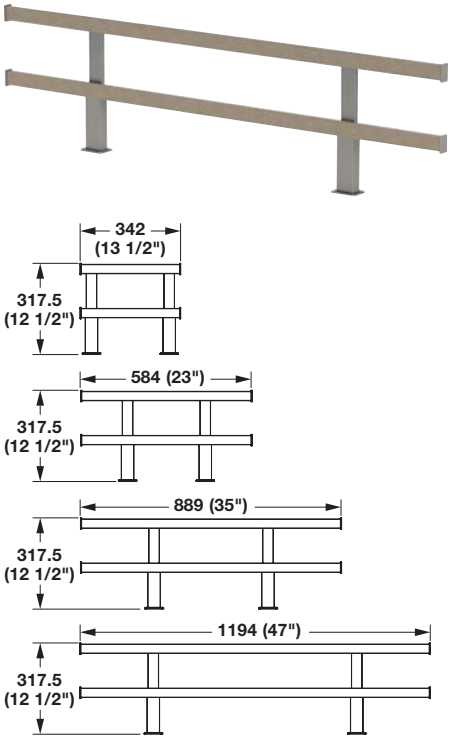

> Height: 318 mm (12 1/2")
> Material: Aluminum/Faux Leather

		Width			
Metal finish	**Leather color**	**342 (13 1/2")**	**584 (23")**	**889 (35")**	**1194 (47")**
matt nickel	oyster	807.74.080	807.74.081	807.74.082	807.74.083
	winter	807.74.280	807.74.281	807.74.282	807.74.283
	pewter	807.74.180	807.74.181	807.74.182	807.74.183
matt aluminum	oyster	807.74.070	807.74.071	807.74.072	807.74.073
	winter	807.74.270	807.74.271	807.74.272	807.74.273
	pewter	807.74.170	807.74.171	807.74.172	807.74.173
slate gray	oyster	807.74.380	807.74.381	807.74.382	807.74.383
	winter	807.74.580	807.74.581	807.74.582	807.74.583
	pewter	807.74.480	807.74.481	807.74.482	807.74.483
matt gold	oyster	807.74.670	807.74.671	807.74.672	807.74.673
	winter	807.74.870	807.74.871	807.74.872	807.74.873
	pewter	807.74.770	807.74.771	807.74.772	807.74.773
black	oyster	807.74.370	807.74.371	807.74.372	807.74.373
	winter	807.74.570	807.74.571	807.74.572	807.74.573
	pewter	807.74.470	807.74.471	807.74.472	807.74.473
Recommended # of Hooks		3	4	5	6

Supplied With
2 horizontal bars, 2 vertical mounts, Mounting hardware

Note
Order hooks and accessories separately, see pages **4.77–4.77C**.

Dimensional data not binding. Dimensions in mm, inches are approximate. We reserve the right to alter specifications without notice.

HÄFELE

TAG Symphony

> The Quartet is ideal for low-profile, quickly-accessible storage of hanging objects like umbrellas, coats, belts, and backpacks
> Narrower widths mount above vanities or on the sides of cabinets to store jewelry and accessories
> Broader widths deliver endless wall-mounted storage options wherever they are needed in the home
> Weight capacity: max. 22.7 kg (50 lbs.) per horizontal bar and max. 90 kg (200 lbs.) total for a system, evenly distributed

→ Quartet

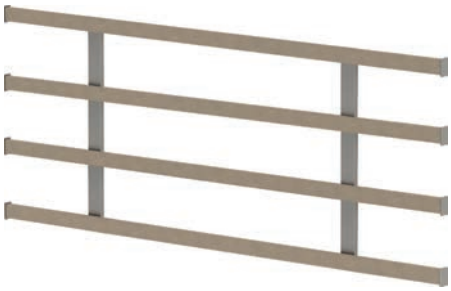

> Height: 483 mm (19")
> Material: Aluminum/Faux Leather

		Width			
Metal finish	**Leather color**	**342 (13 1/2")**	**584 (23")**	**889 (35")**	**1194 (47")**
matt nickel	oyster	807.73.002	807.73.001	807.73.000	807.73.602
	winter	807.73.601	807.73.600	807.73.802	807.73.801
	pewter	807.73.800	807.73.302	807.73.301	807.73.300
matt aluminum	oyster	807.73.012	807.73.011	807.73.010	807.73.612
	winter	807.73.611	807.73.610	807.73.812	807.73.811
	pewter	807.73.810	807.73.312	807.73.311	807.73.310
slate gray	oyster	807.73.022	807.73.021	807.73.020	807.73.622
	winter	807.73.621	807.73.620	807.73.322	807.73.321
	pewter	807.73.320	807.73.822	807.73.821	807.73.820
matt gold	oyster	807.73.032	807.73.031	807.73.030	807.73.632
	winter	807.73.631	807.73.630	807.73.832	807.73.831
	pewter	807.73.830	807.73.332	807.73.331	807.73.330
black	oyster	807.71.310	807.71.311	807.71.312	807.71.313
	winter	807.71.810	807.71.811	807.71.812	807.71.813
	pewter	807.71.610	807.71.611	807.71.612	807.71.613
Recommended # of Hooks		4	8	12	16

Supplied With
4 horizontal bars, 2 vertical mounts, Mounting hardware

Note
Order hooks and accessories separately, see pages **4.77–4.77C**.

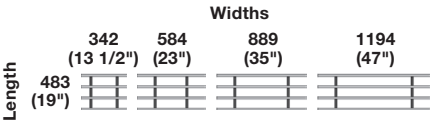

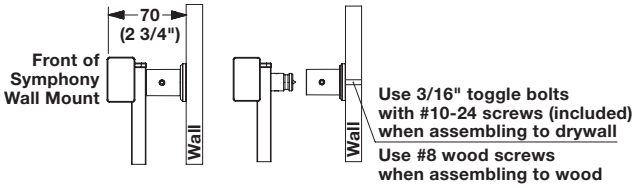

Dimensional data not binding. Dimensions in mm, inches are approximate. We reserve the right to alter specifications without notice.

This page is left blank intentionally.

Dimensional data not binding. Dimensions in mm, inches are approximate. We reserve the right to alter specifications without notice.

TAG Symphony

> Providing head to toe organization, the eight bar Octave can span across a bare wall or tuck tidily behind a door
> Great for a family entryway or as additional storage in the closet
> Narrower widths can be efficiently mounted on the sides of partitions or cabinets, while broader widths are ideal in bedrooms, closets, mudrooms, and foyers
> Hooks can be placed anywhere along the horizontal bars
> Weight capacity: max. 22.7 kg (50 lbs.) per horizontal bar and max. 90 kg (200 lbs.) total for a system, evenly distributed

→ Octave

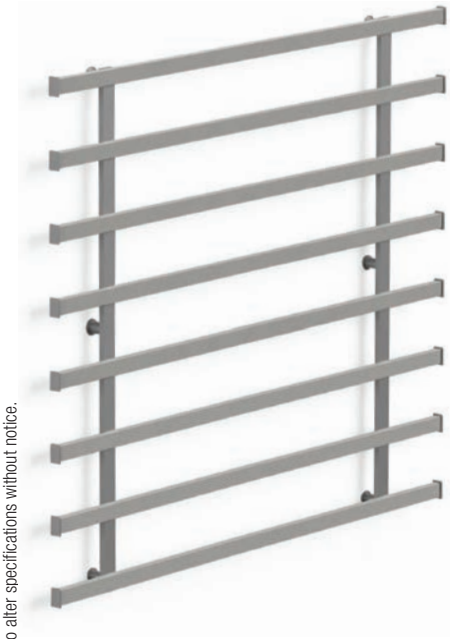

> Height: 1082 mm (42 5/8")
> Material: Aluminum/Faux Leather

Metal finish	Leather color	Width 342 (13 1/2")	584 (23")	889 (35")	1194 (47")
matt nickel	oyster	807.73.042	807.73.041	807.73.040	807.73.642
	winter	807.73.641	807.73.640	807.73.842	807.73.841
	pewter	807.73.840	807.73.342	807.73.341	807.73.340
matt aluminum	oyster	807.73.052	807.73.051	807.73.050	807.73.652
	winter	807.73.651	807.73.650	807.73.852	807.73.851
	pewter	807.73.850	807.73.352	807.73.351	807.73.350
slate gray	oyster	807.74.002	807.74.001	807.74.000	807.74.602
	winter	807.74.601	807.74.600	807.74.802	807.74.801
	pewter	807.74.800	807.74.302	807.74.301	807.74.300
matt gold	oyster	807.73.062	807.73.061	807.73.060	807.73.662
	winter	807.73.661	807.73.660	807.73.862	807.73.861
	pewter	807.73.860	807.73.362	807.73.361	807.73.360
black	oyster	807.71.320	807.71.321	807.71.322	807.71.323
	winter	807.71.820	807.71.821	807.71.822	807.71.823
	pewter	807.71.620	807.71.621	807.71.622	807.71.623
Recommended # of Hooks		8	12	16	20

Supplied With
8 horizontal bars, 2 vertical mounts, Mounting hardware

Note
Order hooks and accessories separately, see pages **4.77–4.77C**.

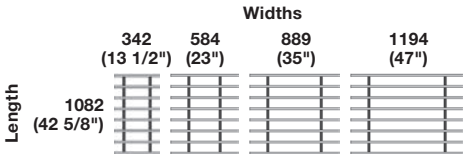

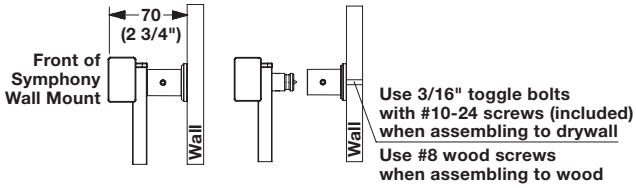

Dimensional data not binding. Dimensions in mm, inches are approximate. We reserve the right to alter specifications without notice.

TAG Symphony

> The tallest Symphony Wall Organizer is a functional piece of art, ideal for high-capacity, low-profile storage
> The Dodeca is an impressive display of twelve horizontal bars ideally suited for wide open walls where a diverse array of items can be stored
> In the closet, create a wall display of three dozen high-heeled shoes, or over a hundred ties; in an entryway, hang coats, hats and bags up high with shoes at the bottom

→ Dodeca

> Height: 1682 mm (66 1/4")
> Material: Aluminum/Faux Leather

Metal finish	Leather color	Width 342 (13 1/2")	584 (23")	889 (35")	1194 (47")
matt nickel	oyster	807.74.012	807.74.011	807.74.010	807.74.612
	winter	807.74.611	807.74.610	807.74.812	807.74.811
	pewter	807.74.810	807.74.312	807.74.311	807.74.310
matt aluminum	oyster	807.73.072	807.73.071	807.73.070	807.73.672
	winter	807.73.671	807.73.670	807.73.872	807.73.871
	pewter	807.73.870	807.73.372	807.73.371	807.73.370
slate gray	oyster	807.74.022	807.74.021	807.74.020	807.74.622
	winter	807.74.621	807.74.620	807.74.822	807.74.821
	pewter	807.74.820	807.74.322	807.74.321	807.74.320
matt gold	oyster	807.73.082	807.73.081	807.73.080	807.73.682
	winter	807.73.681	807.73.680	807.73.882	807.73.881
	pewter	807.73.880	807.73.382	807.73.381	807.73.380
black	oyster	807.71.330	807.71.331	807.71.332	807.71.333
	winter	807.71.830	807.71.831	807.71.832	807.71.833
	pewter	807.71.630	807.71.631	807.71.632	807.71.633
Recommended # of Hooks		12	16	20	24

Supplied With
12 horizontal bars, 2 vertical mounts, Mounting hardware

Note
Order hooks and accessories separately, see pages **4.77–4.77C**.

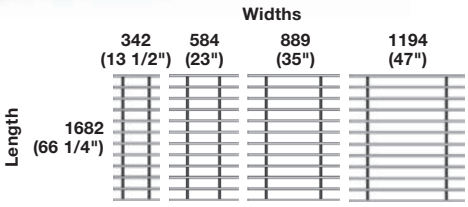

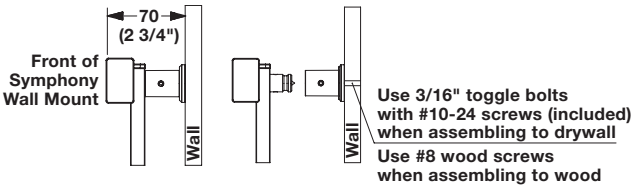

Dimensional data not binding. Dimensions in mm, inches are approximate. We reserve the right to alter specifications without notice.

TAG Symphony

> Hooks can be placed anywhere along the horizontal bars and can easily be reconfigured to adapt to changing storage needs
> The hooks project only a short distance from the organizer, allowing it to fit behind doors or in areas with limited space
> Material: Zinc

→ Triple Hook

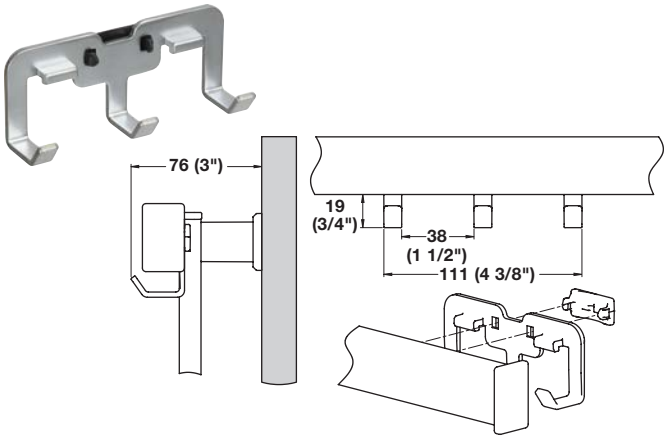

> The triple hook is small and flexible and can be used for bracelets, necklaces, belts and more
> Weight capacity: max. 4.5 kg (10 lbs.)

Finish	Item No.
matt aluminum	807.72.050
matt nickel	807.72.650
matt gold	807.72.850
slate	807.72.350
black	807.72.250

→ Coat Hook

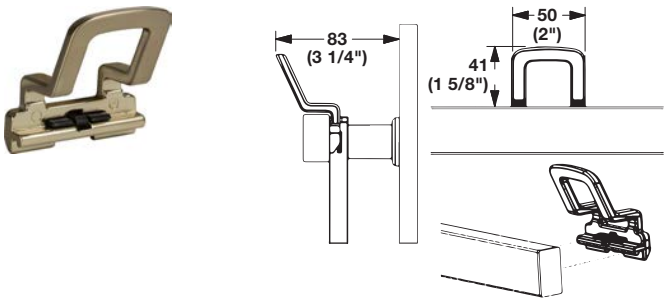

> The versatile coat hook is for more than just coats; hang robes, hats, backpacks, and large handbags
> This flexible hook is also great for sunglasses or clothes hangers
> Weight capacity: max. 9 kg (20 lbs.)

Finish	Item No.
matt aluminum	807.72.030
matt nickel	807.72.630
matt gold	807.72.830
slate	807.72.330
black	807.72.230

Dimensional data not binding. Dimensions in mm, inches are approximate. We reserve the right to alter specifications without notice.

HÄFELE

TAG Symphony

> Hooks can be placed anywhere along the horizontal bars and can easily be reconfigured to adapt to changing storage needs
> The hooks project only a short distance from the organizer, allowing it to fit behind doors or in areas with limited space
> Material: Zinc

→ Jewelry Hook

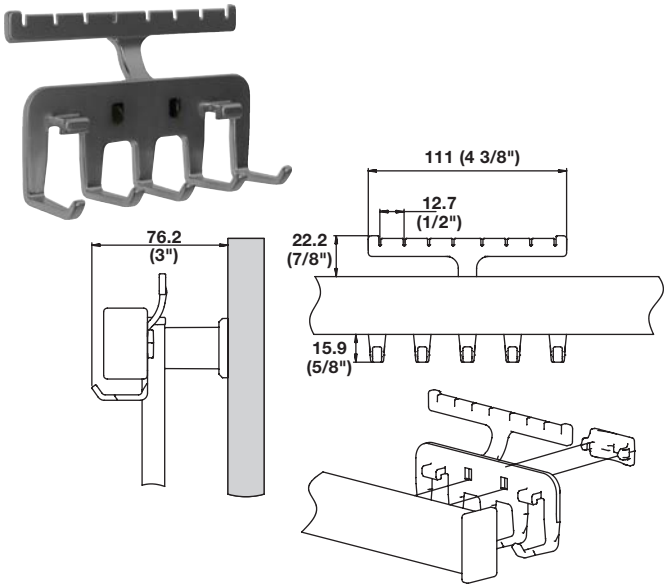

> Specifically intended to hang necklaces, bracelets and other jewelry from the forward-facing hooks
> With integrated earring slots to hold sets securely in place while beautifully displaying them with ease of accessibility
> Weight capacity: max. 4.5 kg (10 lbs.)

Finish	Item No.
matt aluminum	807.72.025
matt nickel	807.72.625
matt gold	807.72.825
slate	807.72.325
black	807.72.925

→ Shoe Hook

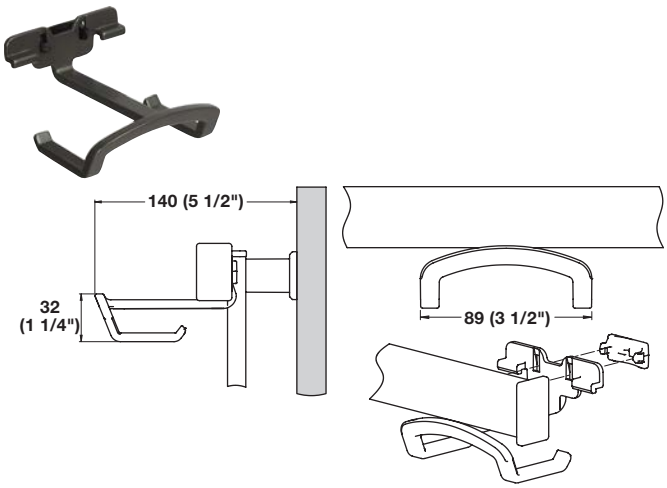

> Designed to hold various styles of men's and women's shoes
> This versatile hook can be used for other hanging items such as bracelets or scarves
> Weight capacity: max. 4.5 kg (10 lbs.)

Finish	Item No.
matt aluminum	807.72.060
matt nickel	807.72.660
matt gold	807.72.860
slate	807.72.360
black	807.72.260

Dimensional data not binding. Dimensions in mm, inches are approximate. We reserve the right to alter specifications without notice.

TAG Symphony Accessories

> Office accessories easily lock into horizontal bars without tools
> Repositioning on horizontal bars is quick and simple

→ Pencil Holder

> Stores pens, markers, scissors and more
> Material: Steel

Finish	Item No.
white	818.84.710

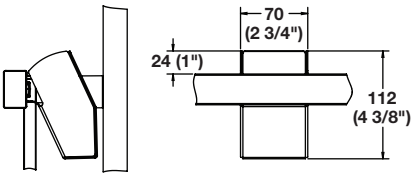

→ Pencil Tray with Plastic Containers

> Includes hidden hooks to hang small accessories
> Containers are removable and can be used to store small items like paper clips and USB drives
> Material: Steel/Plastic

Finish	Item No.
white	818.84.720

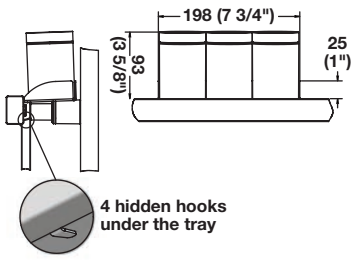

Dimensional data not binding. Dimensions in mm, inches are approximate. We reserve the right to alter specifications without notice.

HÄFELE

TAG Symphony Accessories

→ Tablet Stand and Glass Whiteboard

> Can be used with a tablet or whiteboard
> Place your tablet at eye level, making it ideal for video calls
> Material: Steel/Glass

Finish	Item No.
white	818.84.730

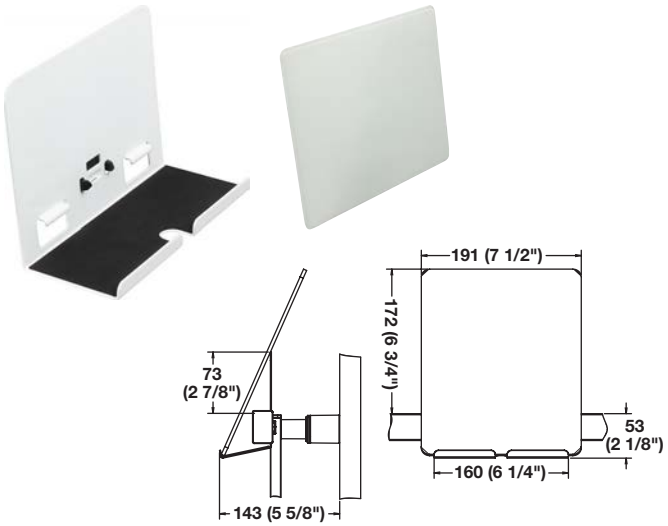

→ Paper Tray

> Holds notebooks, small books and loose documents
> Magnets can be added to hold additional notes
> Material: Steel

Finish	Item No.
white	818.84.740

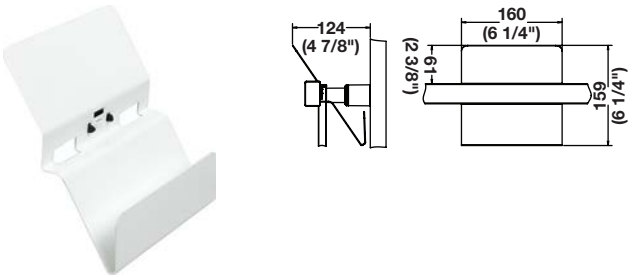

Dimensional data not binding. Dimensions in mm, inches are approximate. We reserve the right to alter specifications without notice.

TAG Symphony Accessories

→ Extension Attachment

Finish	Item No.
matt aluminum	818.84.000
matt gold	818.84.800
matt nickel	818.84.600
slate	818.84.300
black	818.84.200

Note
Extensions provide a greater distance from the wall to the backside of the horizontal bars and are required for use with the Symphony accessories.

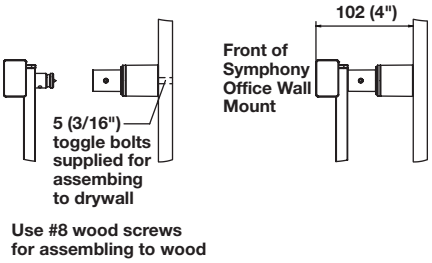

Dimensional data not binding. Dimensions in mm, inches are approximate. We reserve the right to alter specifications without notice.

TAG Illuminated Glass Shelf

> Can be mounted alone or above a drawer to showcase jewelry and other accessories
> Supplied with 12 V Loox LED Lighting in your choice of 3000K (warm white) and 4000K (cool white)
> Mounts quickly and easily with concealed hardware for an attractive installation
> Shelf frame coordinates with other accessories like ENGAGE, while the glass surface increases visibility
> Shelf has been tested to hold up to 25 kg (55 lbs.)
> Optional 25 mm (1") filler strip available to extend shelf depth
> Material: Aluminum/Tempered safety glass

→ Shelf

		Light color: 3000K warm white			Light color: 4000K cool white		
Depth	**Width**	**matt gold**	**matt nickel**	**slate**	**matt gold**	**matt nickel**	**slate**
349 (13 3/4")	457 (18")	807.76.800	807.76.600	807.76.300	807.76.810	807.76.610	807.76.310
	610 (24")	807.76.801	807.76.601	807.76.301	807.76.811	807.76.611	807.76.311
	762 (30")	807.76.802	807.76.602	807.76.302	807.76.812	807.76.612	807.76.312
	915 (36")	807.76.803	807.76.603	807.76.303	807.76.813	807.76.613	807.76.313
521 (20 1/2")	457 (18")	807.76.820	807.76.620	807.76.320	807.76.830	807.76.630	807.76.330
	610 (24")	807.76.821	807.76.621	807.76.321	807.76.831	807.76.631	807.76.331
	762 (30")	807.76.822	807.76.622	807.76.322	807.76.832	807.76.632	807.76.332
	915 (36")	807.76.823	807.76.623	807.76.323	807.76.833	807.76.633	807.76.333

Supplied With
12V Loox LED Lighting

→ Filler Strip, optional

> Allows shelf depth to be extended by 25 mm (1")
> Material: Aluminum

Width	matt gold	matt nickel	slate
457 (18")	807.76.890	807.76.690	807.76.390
610 (24")	807.76.891	807.76.691	807.76.391
762 (30")	807.76.892	807.76.692	807.76.392
915 (36")	807.76.893	807.76.693	807.76.393

Dimensional data not binding. Dimensions in mm, inches are approximate. We reserve the right to alter specifications without notice.

TAG Illuminated Glass Shelf

Includes wire lead from back of shelf:
> 356 mm (14") deep shelves have 1651 mm (65") lead
> 508 mm (20") deep shelves have 1499 mm (59") lead

Approximate power consumption:
> 8.4 W for 915 mm (36") shelf
> 6.9 W for 762 mm (30") shelf
> 5.4 W for 610 mm (24") shelf
> 4.0 W for 457 mm (18") shelf

> Use 12 V Loox Lighting system.

→ Installation

521 (20 1/2") Depth

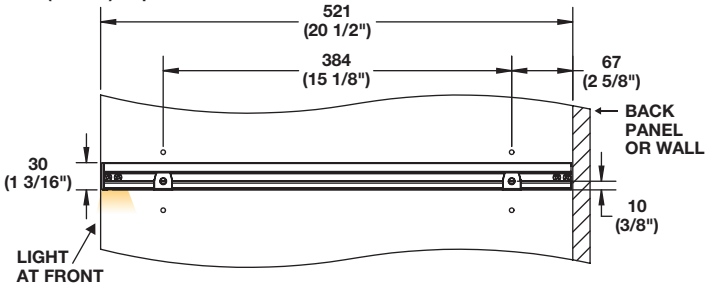

No filler

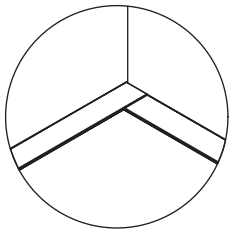

With filler

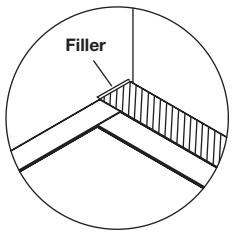

349 (13 3/4") Depth

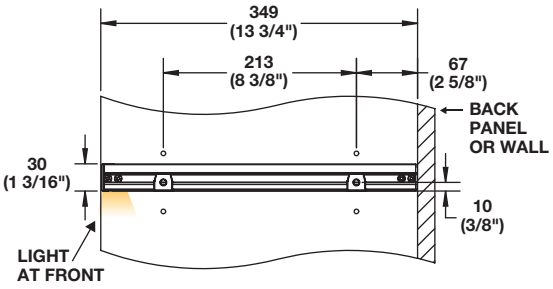

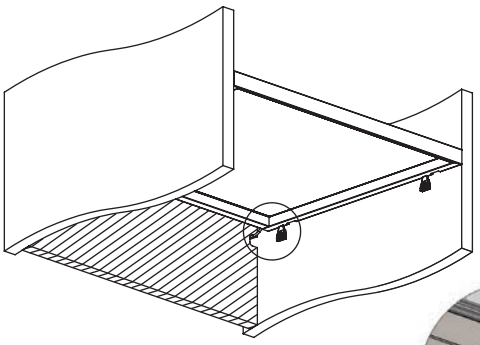

Insert the illuminated glass shelf on the supports.

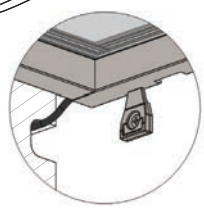

521 (20 1/2") Depth with filler

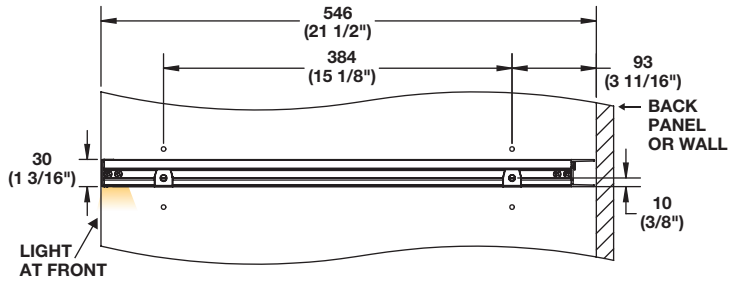

349 (13 1/4") Depth with filler

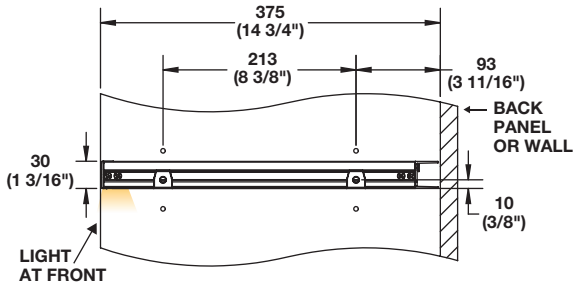

Dimensional data not binding. Dimensions in mm, inches are approximate. We reserve the right to alter specifications without notice.

TAG Illuminated Glass Shelf Accessories

→ LOOX LED Driver, 12 V

> With overload protection
> Degree of protection: IP20
> Input voltage: 100–240 V~; 50–60 Hz
> Output voltage: DC 12 V
> Number of connections: 1x socket Loox5 12 V
> Life time: >70,000 hours
> Safety Class 2
> Output: 60 Watts
> Output current: 5.00 Amps
> Standby power consumption: ≤0.3 Watts
> L x W x H: 230 x 70 x 16 (9 1/16" x 2 3/4" x 5/8")
> Material: Plastic

Color	Item No.
black	833.95.003

Supplied With
1 driver
Mounting accessories
US power cord

→ Häfele Loox5 box to box 6-way distributor, 12 V

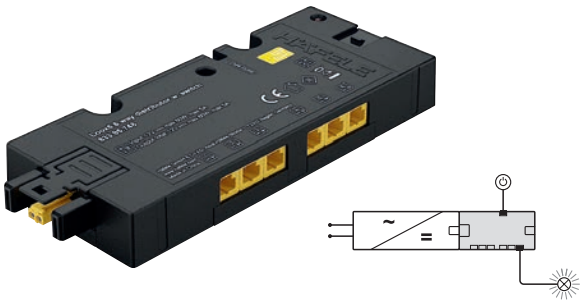

1 switch controls all output ports

> With switching function
> The connection of the distributors with the driver can be done via a box to box plug-in connection or via an extension lead, and observe maximum wattage
> Connected wattage: max. 60 Watts
> Number of connections: 1 x input port with box to box plug
1 x output port with box to box socket
1 x input port switch socket
6 x output ports
> L x W x H: 120 x 50 x 16 mm (4 3/4" x 2" x 5/8")
> Material: Plastic

Color	Item No.
black	833.95.748

Dimensional data not binding. Dimensions in mm, inches are approximate. We reserve the right to alter specifications without notice.

TAG Illuminated Glass Shelf Accessories

→ Dimmer Switches

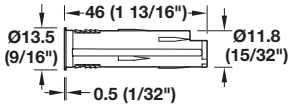

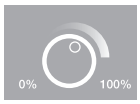

> Soft on/off switching
> Power consumption: ≤0.3 W
> Power rating: 90 W
> Degree of protection: IP20
> Drill hole Ø: 13 mm (1/2")
> Material: Plastic, Color: silver-colored

Switching	Sensor Range	Item No.
Touch	–	833.89.058
Touch-free	0–60 (0"–2 3/8")	833.89.126

Note
Dimming value is stored without the need for power supply (memory function). Order lead for modular switch to Loox driver separately.

→ Sensor Switch, Touchless

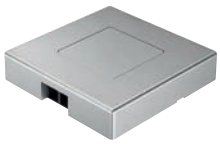

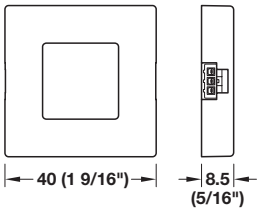

> Soft on/off switching
> For mounting under cabinet or shelf
> Power consumption: ≤0.3 W
> Power rating: 90 W
> Degree of protection: IP20
> L x W x H: 40 x 40 x 8 mm (1 9/16" x 1 9/16" x 5/16")
> Material: Plastic, Color: silver-colored

Sensor range	Item No.
0–80 mm (0"–2 1/8")	833.89.136

Supplied With
Mounting material

Note
On/off state is stored without the need for power supply (memory function). Lead with snap-in connector for modular switches, please order separately.

→ Dimmer Switch, Touch

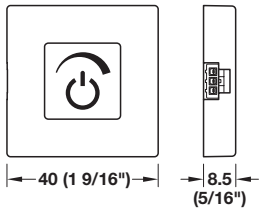

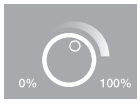

> Soft on/off switching
> For mounting under cabinet or shelf
> L x W x H: 40 x 40 x 8 mm (1 9/16" x 1 9/16" x 5/16")
> Power consumption: ≤0.3 W
> Power rating: 90 W
> Material: Plastic, Color: silver-colored

Sensor range	Item No.
0–80 mm (0"–2 1/8")	833.89.134

Supplied With
Mounting material

Note
On/off state is stored without the need for power supply (memory function). Lead with snap-in connector for modular switches, please order separately.

→ Lead for Modular Switches

> Degree of protection: IP20
> Material: Plastic, Color: black

Length	Item No.
500 (19 1/16")	833.89.140
1000 (39 3/8")	833.89.141
2000 (78 3/4")	833.89.142

Dimensional data not binding. Dimensions in mm, inches are approximate. We reserve the right to alter specifications without notice.

TAG ENGAGE

> Easily reconfigured to meet your storage needs
> Jewelry trays and dividers customize the pull-out shelf
> Fabric lined bottom is standard

When used as a jewelry organizer, see next page
> The perfect jewelry storage solution that tucks under a fixed shelf using minimal space
> A completely customizable grid specifically sized for jewelry, ties, glasses and more
> Any combination of grid dividers can be removed, changing the spacing so that it is perfectly sized for sunglasses, belts, larger jewelry, mobile phones, etc.

When used as a divided shelf, see next page
> Created specifically for jeans, shoes, handbags, hats and shirts
> Can be customized using 76 mm (3") tall shelf dividers, with as few or as many as desired
> Color coordinated dividers can be set at any position

When used as a folding station:
> A clutter free space to fold clothing before storing
> Tucks neatly under a fixed shelf
> Simply remove the bottom, add a 19 mm (3/4") thick piece of material and then reinstall the bottom to create a flush mounted folding station

Bottom should be cut to the following dimensions when used as a folding station

Shelf width	Length	Depth
457 mm (18")	376 mm (14 13/16")	306 mm (12 1/16")
610 mm (24")	529 mm (20 13/16")	306 mm (12 1/16")
762 mm (30")	681 mm (26 13/16")	306 mm (12 1/16")

→ Pull-Out Shelf

> H x D: 71 x 353 mm (2 13/16" x 13 7/8")
> Material: Frame: Aluminum; Bottom: Fabric

Width	matt nickel; slate fabric	black; beach fabric	matt gold; beach fabric	slate; slate fabric	matt aluminum; slate fabric
457 (18")	807.77.601	807.78.301	807.77.901	807.78.101	807.77.001
610 (24")	807.77.602	807.78.302	807.77.902	807.78.102	807.77.002
762 (30")	807.77.603	807.78.303	807.77.903	807.78.103	807.77.003
915 (36")	807.77.604	807.78.304	807.77.904	807.78.104	807.77.004

Supplied With
Full extension, soft close undermount slides

→ Drawer Face Adapter, optional

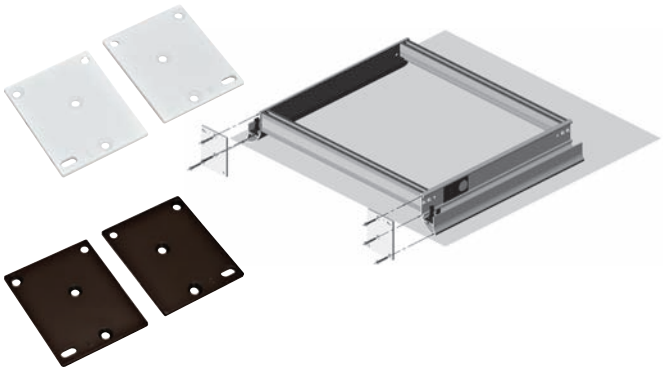

> Allows a drawer front to be fixed to the front of the pull-out frame
> Conceals the frame and dividers and makes it possible to add a lock to jewelry drawers
> A unique design feature for limitless customization to the appearance of the closet
> Simple to install and makes drawer face mounting easy
> Drawer front maximum height: 127 mm (5")
> W x H x D: 60 x 75 x 4 mm (2 3/8" x 2 15/16" x 1/8")
> Material: Steel

Finish	Item No.
white	807.77.796
black	807.77.596

Note Cannot be used with the Engage Pant Organizer.

Dimensional data not binding. Dimensions in mm, inches are approximate. We reserve the right to alter specifications without notice.

TAG ENGAGE Pull-Out Shelf Accessories

→ Jewelry Organizer

When used with pull-out shelf:
> The perfect jewelry storage solution that tucks under a fixed shelf using minimal space
> A completely customizable grid specifically sized for jewelry, ties, scarves and more
> Any combination of grid dividers can be removed, changing the spacing so that it is perfectly sized for sunglasses, belts, larger jewelry, mobile phones, etc.
> Material: Aluminum

Each space is 76 mm (3") wide x 100 mm (4") deep

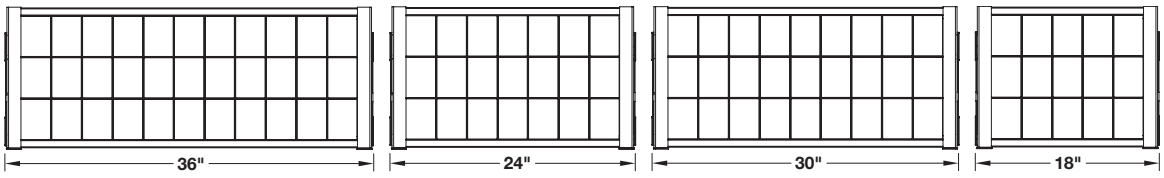

Additional Configurations

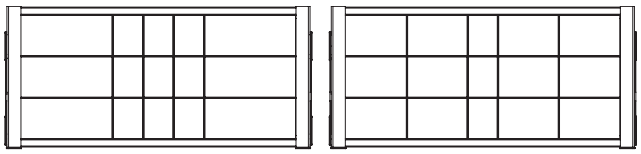

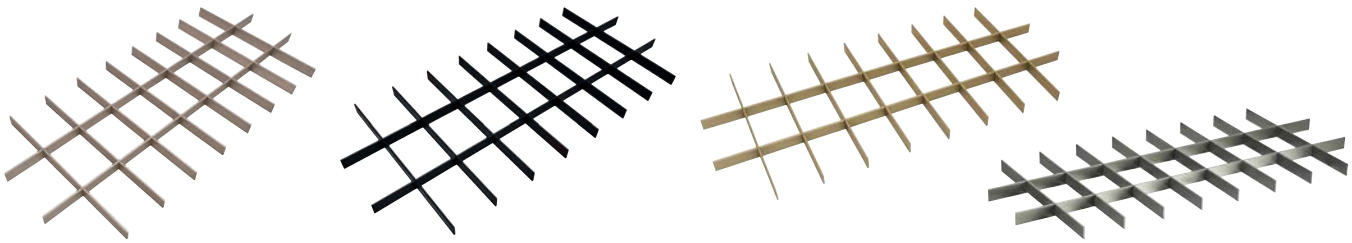

> H x D: 24 x 305 mm (15/16" x 12")

Pull-out shelf width	Width	matt nickel	black	matt gold	slate	matt aluminum
457 (18")	376 (14 13/16")	807.77.681	807.78.581	807.77.981	807.77.281	807.77.081
610 (24")	529 (20 13/16")	807.77.682	807.78.582	807.77.982	807.77.282	807.77.082
762 (30")	681 (26 13/16")	807.77.683	807.78.583	807.77.983	807.77.283	807.77.083
915 (36")	818 (32 13/16")	807.77.684	807.78.584	807.77.984	807.77.284	807.77.084

→ Shelf Dividers

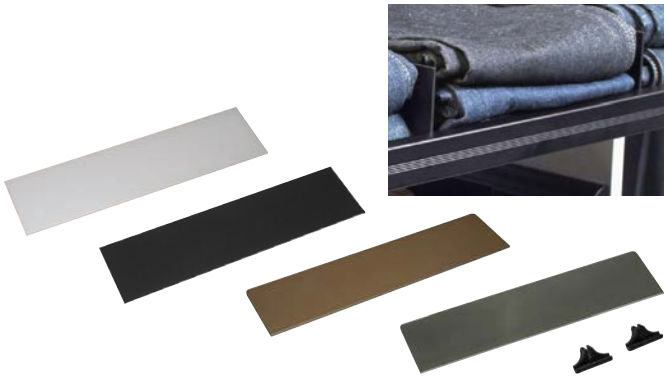

When used with pull-out shelf:
> Created specifically for jeans, shoes, handbags, hats and shirts
> Color coordinated dividers can be set at any desired position
> Easily reconfigurable
> W x H x D: 322 x 80 x 41 mm (12 11/16" x 3 1/8" x 1 5/8")

Finish	Item No.
matt nickel	807.77.199
black	807.78.599
matt gold	807.77.999
slate	807.77.299
matt aluminum	807.77.699

Supplied With
Clips

Dimensional data not binding. Dimensions in mm, inches are approximate. We reserve the right to alter specifications without notice.

TAG ENGAGE Divided Drawers

→ Lingerie Drawers

> Designed specifically for lingerie to organize more pieces in less space than conventional drawers
> Dividers are lined with the ENGAGE fabric, creating a luxurious space
> Dividers can be set at any spacing required – 100% customizable compartments
> H x D: 126 x 353 mm (5" x 13 7/8")
> Material: Frame: Aluminum; Drawer: Fabric

Width	matt nickel; slate fabric	black; beach fabric	matt gold; beach fabric	slate; slate fabric	matt aluminum; slate fabric
457 (18")	807.77.611	807.78.311	807.77.911	807.78.111	807.77.011
610 (24")	807.77.612	807.78.312	807.77.912	807.78.112	807.77.012
762 (30")	807.77.613	807.78.313	807.77.913	807.78.113	807.77.013
915 (36")	807.77.614	807.78.314	807.77.914	807.78.114	807.77.014

Supplied With
Full extension, soft close undermount slides
Dividers

→ Additional Lingerie Drawer Dividers

> Easily reconfigurable to customize drawers
> W x H x D: 330 x 74 x 41 mm (13" x 2 7/8" x 1 5/8")
> Material: Fabric

Color	Item No.
beach	807.77.391
slate	807.77.491

Supplied With
Clips

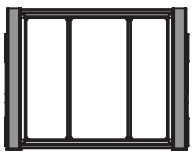

18" - standard
with 2 dividers

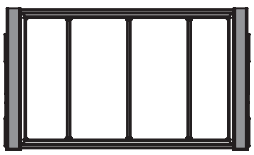

24" - standard
with 3 dividers

30" - standard
with 4 dividers

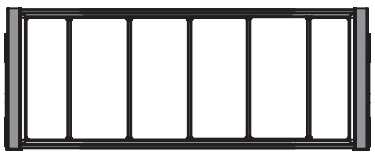

36" - standard
with 5 dividers

Dimensional data not binding. Dimensions in mm, inches are approximate. We reserve the right to alter specifications without notice.

TAG ENGAGE Divided Drawers

→ Deep Drawers

> A sophisticated bulk storage solution specifically designed for the closet
> Fully lined fabric basket with a deep divider and rigid wooden base
> Dividers are lined with the ENGAGE fabric, creating a luxurious space
> The 204 mm (8") deep basket is large enough to organize but not too deep to lose things
> 457 mm (18") width supplied with one divider, 610, 762 and 915 mm (24", 30" and 36") supplied with two dividers
> Dividers can be set at any spacing required -100% customizable compartments
> H x D: 227 x 353 mm (8 15/16" x 13 7/8")
> Material: Frame: Aluminum; Drawer: Fabric

Width	matt nickel; slate fabric	black; beach fabric	matt gold; beach fabric	slate; slate fabric	matt aluminum; slate fabric
457 (18")	807.77.621	807.78.321	807.77.921	807.78.121	807.77.021
610 (24")	807.77.622	807.78.322	807.77.922	807.78.122	807.77.022
762 (30")	807.77.623	807.78.323	807.77.923	807.78.123	807.77.023
915 (36")	807.77.624	807.78.324	807.77.924	807.78.124	807.77.024

Supplied With
Full extension, soft close undermount slides
Dividers

→ Additional Deep Drawer Dividers

> Easily reconfigurable to customize drawers
> W x H x D: 330 x 172 x 41 mm (13" x 6 3/4" x 1 5/8")
> Material: Fabric

Color	Item No.
beach	807.77.392
slate	807.77.492

Supplied With
Clips

Dimensional data not binding. Dimensions in mm, inches are approximate. We reserve the right to alter specifications without notice.

TAG ENGAGE

→ Shoe Rack

> The perfect solution for shoes to utilize closet depth and allow easy access
> Specially designed Sandal Clips convert the front row into sandal or flip flop storage
> H x D: 190 x 353 mm (7 1/2" x 13 7/8")
> Material: Aluminum

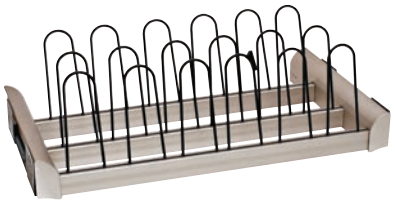

Width	No. of shoes (pairs)	matt nickel	black	matt gold	slate	matt aluminum
457 (18")	6	807.77.671	807.77.571	807.77.971	807.77.271	807.77.071
610 (24")	9	807.77.672	807.77.572	807.77.972	807.77.272	807.77.072
762 (30")	12	807.77.673	807.77.573	807.77.973	807.77.273	807.77.073
915 (36")	15	807.77.674	807.77.574	807.77.974	807.77.274	807.77.074

Supplied With
Full extension, soft close undermount slides
Sandal clips: 4 for 457 mm (18")
6 for 610 mm (24")
8 for 762 mm (30")
10 for 915 mm (36")

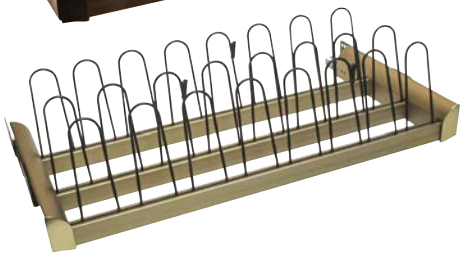

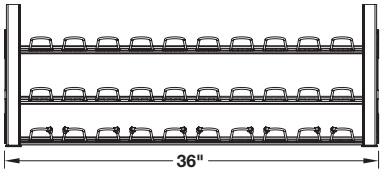

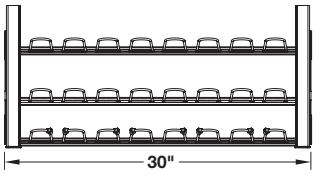

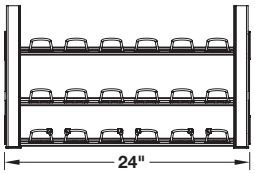

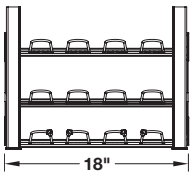

Dimensional data not binding. Dimensions in mm, inches are approximate. We reserve the right to alter specifications without notice.

TAG ENGAGE

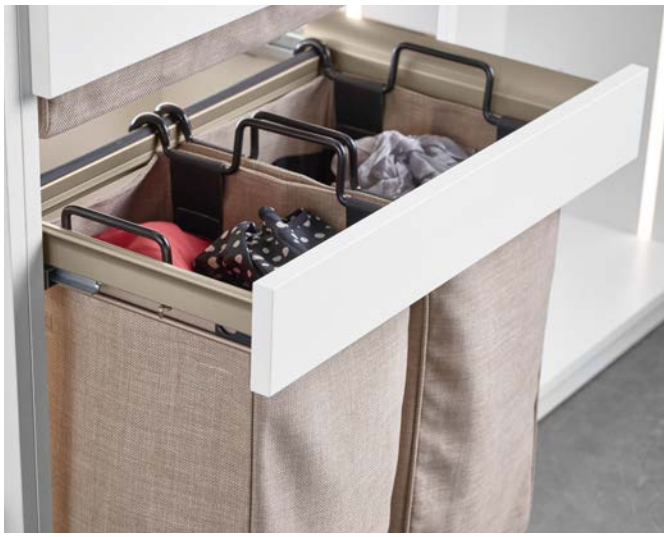

> Beautiful, deep, removable laundry hampers in 4 widths
> Bags are simple to remove and carry to the laundry room with one hand
> Frame: H x D: 71 x 353 mm (2 13/16" x 13 7/8")
> Material: Aluminum

→ Laundry Organizer

Width	Bags	matt nickel/ slate bags	black/ beach bags	matt gold/ beach bags	slate/ slate bags	matt aluminum; slate bags
457 (18")	1 x 18" Bag	807.81.510	807.82.320	807.81.920	807.81.710	807.81.410
610 (24")	2 x 12" Bags	807.81.511	807.82.321	807.81.921	807.81.711	807.81.411
762 (30")	2 x 15" Bags	807.81.512	807.82.322	807.81.922	807.81.712	807.81.412
915 (36")	2 x 18" Bags	807.81.513	807.82.323	807.81.923	807.81.713	807.81.413

Supplied With
Soft close undermount slides
Laundry bags

Dimensional data not binding. Dimensions in mm, inches are approximate. We reserve the right to alter specifications without notice.

HÄFELE

TAG ENGAGE

> Plastic strips allow the pant hangers to glide effortlessly
> Garment clips can be added for hanging skirts or pants by the cuff
> Frame: H x D: 71 x 353 mm (2 13/16" x 13 7/8")
> Material: Aluminum

→ Pant Organizer

Width	# of hangers	matt nickel	black	matt gold	slate	matt aluminum
457 (18")	12	807.81.600	807.82.500	807.81.900	807.81.200	807.81.000
610 (24")	18	807.81.601	807.82.501	807.81.901	807.81.201	807.81.001
762 (30")	24	807.81.602	807.82.502	807.81.902	807.81.202	807.81.002
915 (36")	30	807.81.603	807.82.503	807.81.903	807.81.203	807.81.003

Supplied With
Soft close undermount slides
Hangers

Dimensional data not binding. Dimensions in mm, inches are approximate. We reserve the right to alter specifications without notice.

TAG ENGAGE Pull-Out Laundry/Pant Organizer Accessories and Spare Parts

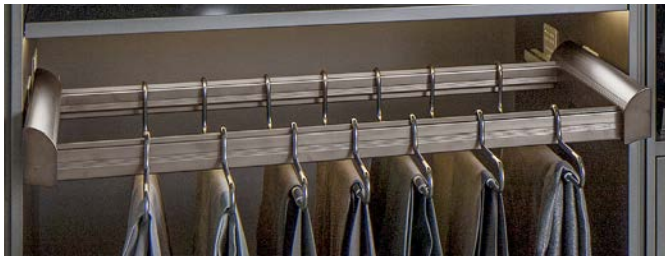

> Easy to remove and carry to the laundry room with one hand
> Handles included
> H x D: 476 x 279 mm (18 3/4" x 11")

→ Laundry Bag

> Material: Fabric; Color: slate

Width	Item No.
305 (12")	807.77.440
381 (15")	807.77.441
457 (18")	807.77.442

> Material: Fabric; Color: beach

Width	Item No.
305 (12")	807.77.340
381 (15")	807.77.341
457 (18")	807.77.342

→ Wire Pants Hanger

> For pant rack
> Material: Steel, powder-coated

Color	Item No.
black	805.58.330

Supplied With
18 pcs.

→ Garment Clip, optional

> Attaches to above hangers for skirts, pants, etc.
> Material: Plastic

Color	Item No.
black	805.58.331

Note
2 required per hanger.

Dimensional data not binding. Dimensions in mm, inches are approximate. We reserve the right to alter specifications without notice.

TAG ENGAGE

> Available in the same slate & beach fabrics to match the entire ENGAGE collection
> Perfectly sized to fit into the 457, 610, 762 and 915 mm (18", 24", 30" and 36") closet sections
> 188 mm (7 3/8") height, fits perfectly on the top shelf of an 86" high closet with an 8 ft. ceiling
> H x D: 188 x 343 mm (7 3/8" x 13 1/2")
> Material: Fabric

→ Storage Boxes

Width	slate	beach
368 (14 1/2")	807.77.460	807.77.360
444 (17 1/2")	807.77.461	807.77.361
596 (23 1/2")	807.77.462	807.77.362

Dimensional data not binding. Dimensions in mm, inches are approximate. We reserve the right to alter specifications without notice.

TAG Synergy Elite

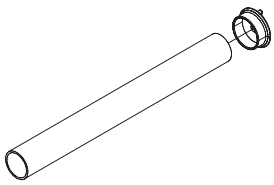

→ Wardrobe Tube

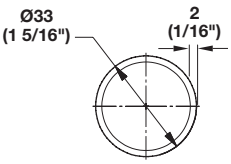

> Round with protective cap
> Insert on top
> Ø x L: 33 x 2438 mm (1 5/16" x 8')
> Material: Aluminum, anodized; Cap: Plastic

Finish	Cap	Item No.
polished chrome	clear	801.42.240
matt aluminum	clear	801.42.440
matt nickel	clear	801.42.640
matt gold	clear	801.42.040
black	black	801.43.340
slate	black	801.42.340

Supplied With
12 pcs.

→ Wardrobe Tube Support

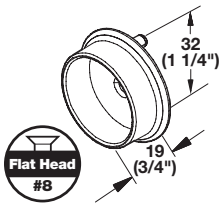

> Unique two-part design allows the support to fully surround the tube ends
> Connect the wedge shaped brackets into line bore holes and side supports onto the end of the tube, then slide supports onto the wedge shaped brackets
> With two pins for 5 mm (3/16") holes
> 32 mm (1 1/4") spacing with an additional screw hole for side panel mounting
> Material: Zinc-plated

Finish	Item No.
polished chrome	803.39.210
matt aluminum	803.39.410
matt nickel	803.39.610
matt gold	803.39.910
black	803.64.410
slate	803.39.710

→ Wardrobe Tube Center Support

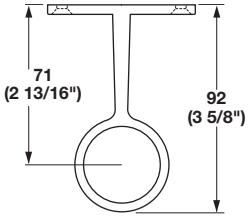

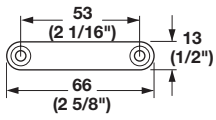

> Surface mount
> For Ø33 mm (1 5/16") tube
> Material: Zinc die-cast

Finish	Item No.
polished chrome	802.06.267
matt aluminum	802.06.367
matt nickel	802.06.667
black	802.06.767
matt gold	802.06.067
slate	802.06.467

Supplied With
Screws

Flat head screws pages 12.7–12.8, 12.10, 12.13

Dimensional data not binding. Dimensions in mm, inches are approximate. We reserve the right to alter specifications without notice.

HÄFELE

TAG Synergy Elite

→ Wardrobe Tube

> Round with protective cap
> Ø x L: 26 x 908 mm (1 5/16" x 35 3/4")
> Material: Vegan Leather; Insert: Plastic

Vegan Leather Color/Insert	Item No.
winter/sandstone	801.81.700
oyster/sandstone	801.81.400
pewter/sandstone	801.81.500

Supplied With
6 pcs.

→ Wardrobe Tube Support

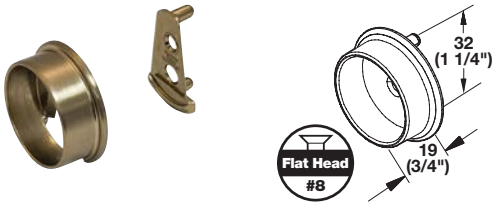

> Unique two-part design allows the support to fully surround the tube ends
> Connect the wedge shaped brackets into line bore holes and side supports onto the end of the tube, then slide supports onto the wedge shaped brackets
> With two pins for 5 mm (3/16") holes
> 32 mm (1 1/4") spacing with an additional screw hole for side panel mounting
> Material: Zinc-plated

Finish	Item No.
polished chrome	803.39.210
matt aluminum	803.39.410
matt nickel	803.39.610
matt gold	803.39.910
black	803.64.410
slate	803.39.710

Dimensional data not binding. Dimensions in mm, inches are approximate. We reserve the right to alter specifications without notice.

This page is left blank intentionally.

Dimensional data not binding. Dimensions in mm, inches are approximate. We reserve the right to alter specifications without notice.

TAG Synergy Elite

Service+

→ Wardrobe Tube with Supports

> Round, with protective cap
> Ø: 33 (1 5/16")
> Material: Aluminum, anodized; Cap: Plastic

Length	polished chrome/ clear cap	matt aluminum/ clear cap	matt nickel/ clear cap	matt gold/ clear cap	black/black cap	slate/ black cap
451 (17 3/4")	801.42.255	801.42.465	801.42.655	801.42.055	801.43.345	801.42.355
603 (23 3/4")	801.42.256	801.42.466	801.42.656	801.42.056	801.43.346	801.42.356
756 (29 3/4")	801.42.257	801.42.467	801.42.657	801.42.057	801.43.347	801.42.357
908 (35 3/4")	801.42.258	801.42.468	801.42.658	801.42.058	801.43.348	801.42.358
1217 (47 15/16")	801.42.259	801.42.469	801.42.659	801.42.059	801.43.349	801.42.359

Supplied With
Tube
2 Supports

Flat head screws pages 12.7–12.8, 12.10, 12.13

Dimensional data not binding. Dimensions in mm, inches are approximate. We reserve the right to alter specifications without notice.

TAG Synergy Elite

> With full extension slide
> W x H: 65 x 67 mm (2 9/16" x 2 5/8")
> Material: Aluminum anodized, Zinc

→ Tie Rack

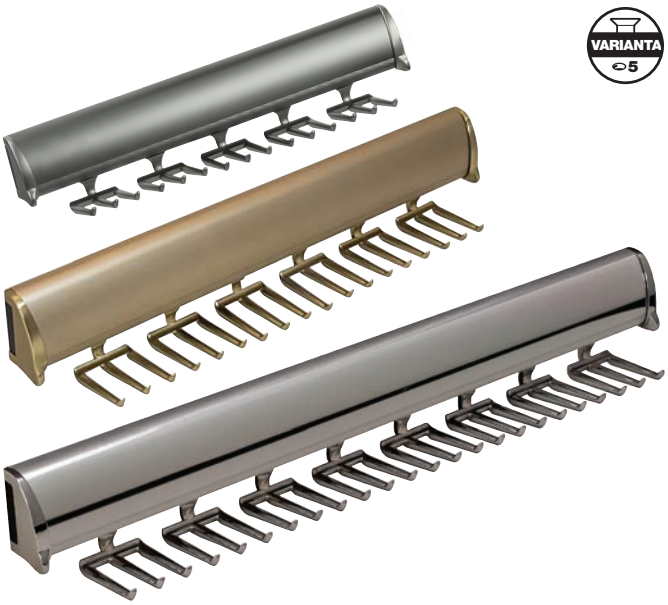

Finish	Hooks & End Cap	15 hook length: 301 mm (11 7/8")	18 hook length: 352 mm (13 7/8")	24 hook length: 455 mm (17 15/16")
polished chrome	–	807.67.201	807.67.203	807.67.205
matt aluminum	chrome	807.67.401	807.67.403	807.67.405
matt nickel	–	807.67.601	807.67.603	807.67.605
matt gold	–	807.67.901	807.67.904	807.67.905
black	–	807.67.501	807.67.503	807.67.505
slate	–	807.67.301	807.67.303	807.67.305

Varianta screws page 12.16

Dimensional data not binding. Dimensions in mm, inches are approximate. We reserve the right to alter specifications without notice.

TAG Synergy Elite

> With full extension slide
> W x H: 42 x 71 mm (1 5/8" x 2 13/16")
> Material: Aluminum anodized, Zinc

→ Belt Rack

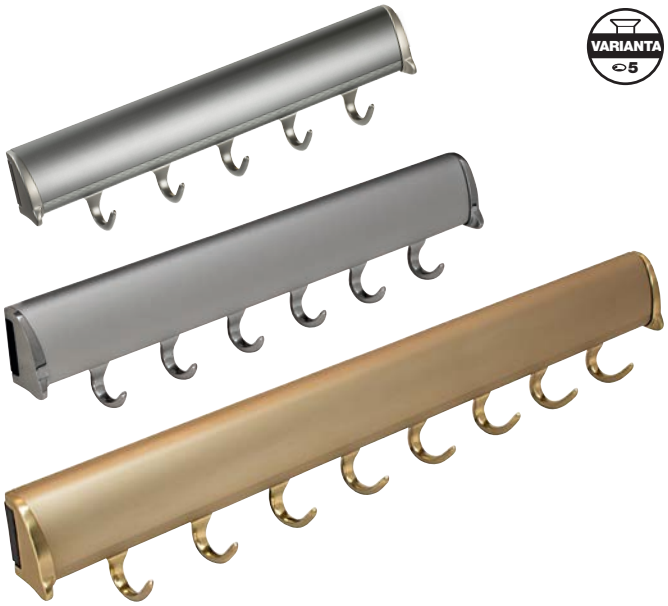

Finish	Hooks & End Cap	5 hook length: 301 mm (11 7/8")	6 hook length: 352 mm (13 7/8")	8 hook length: 455 mm (17 15/16")
polished chrome	–	807.67.211	807.67.213	807.67.215
matt aluminum	chrome	807.67.411	807.67.413	807.67.415
matt nickel	–	807.67.611	807.67.613	807.67.615
matt gold	–	807.67.911	807.67.913	807.67.915
black	–	807.67.511	807.67.513	807.67.515
slate	–	807.67.311	807.67.313	807.67.315

Varianta screws page 12.16

Dimensional data not binding. Dimensions in mm, inches are approximate. We reserve the right to alter specifications without notice.

TAG Synergy Elite

> With full extension slide
> W x H: 55 x 65 mm (2 3/16" x 2 9/16")
> Material: Aluminum anodized, Zinc

→ Scarf Rack

Finish	Hooks & End Cap	5 hook length: 301 mm (11 7/8")	6 hook length: 352 mm (13 7/8")	8 hook length: 455 mm (17 15/16")
polished chrome	–	807.67.221	807.67.223	807.67.225
matt aluminum	chrome	807.67.421	807.67.423	807.67.425
matt nickel	–	807.67.621	807.67.623	807.67.625
matt gold	–	807.67.921	807.67.923	807.67.925
black	–	807.67.521	807.67.523	807.67.525
slate	–	807.67.321	807.67.323	807.67.325

Varianta screws page 12.16

Dimensional data not binding. Dimensions in mm, inches are approximate. We reserve the right to alter specifications without notice.

HÄFELE

TAG Synergy Elite

> Material: Aluminum anodized, Zinc

→ Fixed Accessory Hook

> W x H: 42 x 71 mm (1 5/8" x 2 13/16")

Finish	Hooks & End Cap	6 hook length: 386 mm (15 1/4")	8 hook length: 489 mm (19 1/4")
polished chrome	–	807.67.283	807.67.285
matt aluminum	chrome	807.67.483	807.67.485
matt nickel	–	807.67.683	807.67.685
matt gold	–	807.67.983	807.67.985
black	–	807.67.583	807.67.585
slate	–	807.67.383	807.67.385

Varianta screws page 12.16

Dimensional data not binding. Dimensions in mm, inches are approximate. We reserve the right to alter specifications without notice.

TAG Synergy Elite

> For clothes hangers and hanging garment bags
> Mounts to a side panel
> Weight capacity: 30 lbs. in vertical position
> W x H: 24 x 24 mm (15/16" x 15/16")
> Material: Aluminum, anodized

→ Valet

VARIANTA 5

Finish	Length: 298 mm (11 3/4") Extension: 192 mm (7 9/16")	Length: 358 mm (14 1/8") Extension: 243 mm (9 9/16")
polished chrome	808.71.201	808.71.203
matt aluminum	808.71.401	808.71.403
matt nickel	808.71.601	808.71.603
matt gold	808.71.001	808.71.003
black	808.71.501	808.71.503
slate	808.71.301	808.71.303

Varianta screws page 12.16

Dimensional data not binding. Dimensions in mm, inches are approximate. We reserve the right to alter specifications without notice.

TAG Synergy Elite

> Provides a convenient location to hang a shirt or jacket
> Retracts into the partition, keeping it out of the way when not in use
> Not suitable for purses or heavy garments
> Weight capacity: 2 kg (5 lbs.)
> Length: 102 mm (4")
> Extension: 44 mm (1 3/4")
> Material: Aluminum

→ Valet Pin

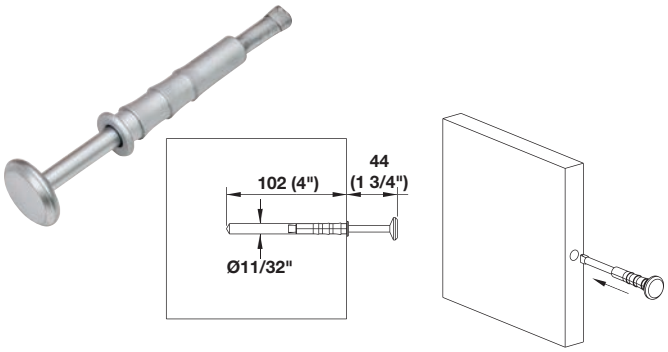

Finish	Item No.
matt aluminum	808.72.000
chrome	808.72.200
black	808.72.400
matt gold	808.72.900
matt nickel	808.72.600
slate	808.72.300

→ Drill Jig

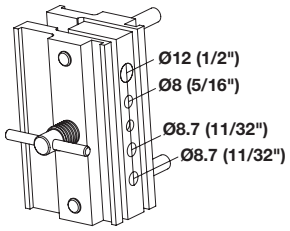

> For drill bit 001.25.910, below

	Item No.
	001.25.912

→ Drill Bit

> Drills holes the proper depth and diameter for the valet pins
> For drill jig 001.25.912, above
> Ø x Length: 8.7 x 165 mm (11/32" x 6 1/2")

	Item No.
	001.25.910

Dimensional data not binding. Dimensions in mm, inches are approximate. We reserve the right to alter specifications without notice.

HÄFELE

TAG Synergy Elite

> For shelving, available in standard widths
> Width can be reduced by sliding the end post off and cutting the aluminum rail; reattach post by tapping on with rubber mallet
> Center post slides back and forth for easy positioning, supplied for lengths over 584 mm (23")
> Horizontal rails are two-sided, one being smooth and other textured to match other Synergy Elite items
> Material: Aluminum

→ Shoe Fence Set

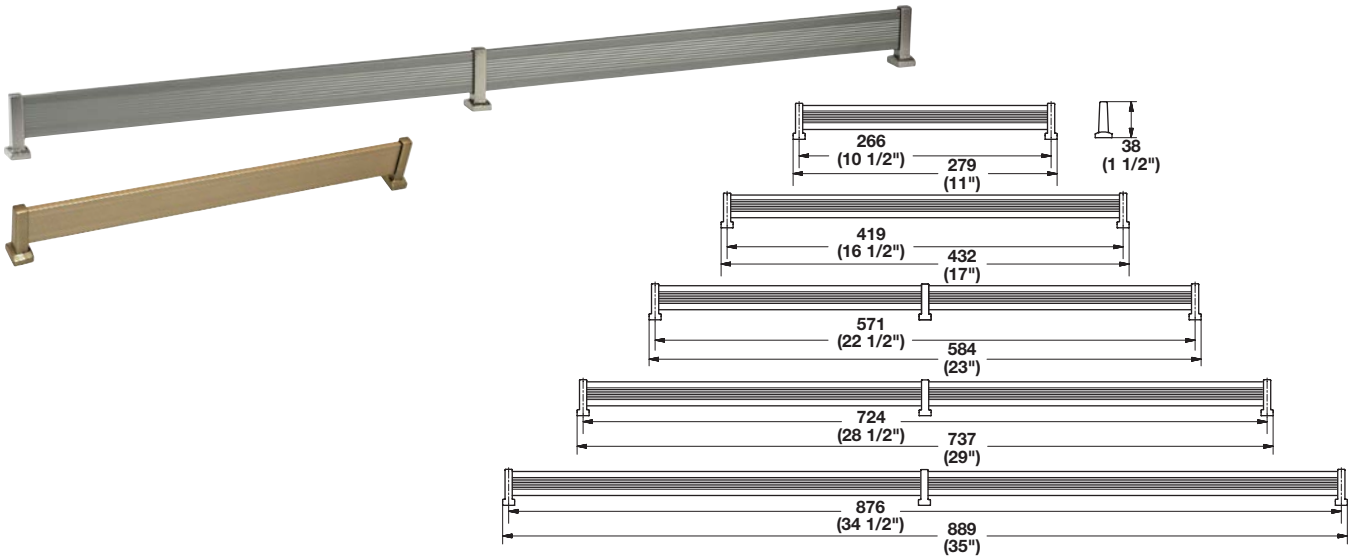

Length	polished chrome	matt aluminum: chrome post	matt nickel	matt gold: polished post	black	slate
279 (11")	547.52.221	547.52.421	547.52.621	547.52.921	547.52.521	547.52.321
432 (17")	547.52.222	547.52.422	547.52.622	547.52.922	547.52.522	547.52.322
584 (23")	547.52.223	547.52.423	547.52.623	547.52.923	547.52.523	547.52.323
737 (29")	547.52.224	547.52.424	547.52.624	547.52.924	547.52.524	547.52.324
889 (35")	547.52.226	547.52.426	547.52.626	547.52.926	547.52.526	547.52.326

Supplied With
Mounting hardware
Bar
2 posts

Dimensional data not binding. Dimensions in mm, inches are approximate. We reserve the right to alter specifications without notice.

TAG Synergy Elite

> Bar can be customized to fit the shelf of your choice
> Perfect for framing shelves, pull-out trays or creating your own shoe fence
> Use the versatile corner posts to create unified corners on L-shaped shoe shelves, frame pull-out shelves or create your own unique design
> Length: 2362 (93")
> Material: Aluminum

→ Shoe Fence Bar

Finish	Item No.
polished chrome	547.52.240
matt aluminum	547.52.040
matt nickel	547.52.640
matt gold	547.52.940
black	547.52.540
slate	547.52.340

→ Shoe Fence Post

> Corner posts provide a sleek solution to framing pull-out shelves, which can be used to store shoes or display your favorite items
> Ideal for framing floating angled shoe shelves
> Perfect for L-shaped shelves, providing a unified corner
> Material: Aluminum

Finish	Center	End	Corner
chrome	547.52.280	547.52.290	547.52.299
matt nickel	547.52.680	547.52.690	547.52.699
matt gold	547.52.980	547.52.990	547.52.999
black	547.52.580	547.52.590	547.52.599
slate	547.52.380	547.52.390	547.52.399

Supplied With
Mounting hardware

Dimensional data not binding. Dimensions in mm, inches are approximate. We reserve the right to alter specifications without notice.

Leather Wrapped Cleat Boards

> For use with cleat hooks on pages **4.101–4.103**
> Faux leather colors perfectly coordinate with Symphony and Synergy Elite wardrobe tubes
> Great for closets, pantries, laundry rooms and entryways

→ Cleat Board

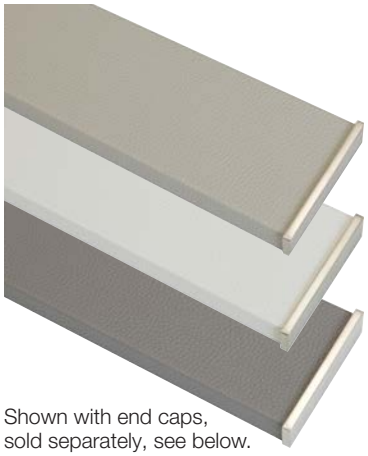

Shown with end caps, sold separately, see below.

> L x W x H: 1118 x 22 x 92 mm (44”x 7/8” x 3 5/8”)
> Material: Particle Board/Faux Leather

Color	Item No.
Oyster	807.83.152
Winter	807.83.752
Pewter	807.83.552

→ End Caps

> Finishes coordinate with cleat hooks on pages **4.101–4.103**
> Press-fit onto leather wrapped cleat boards
> Material: Zinc

Finish	Item No.
polished chrome	807.83.260
matt aluminum	807.83.060
matt nickel	807.83.660
matt gold	807.83.860
black	807.83.460
slate	807.83.360

→ Drill Jig

> For quick and easy cleat hook installation
> L x W x H: 35 x 22 x 109 mm (1 3/8" x 7/8" x 4 5/16")

	Item No.
	001.25.913

Dimensional data not binding. Dimensions in mm, inches are approximate. We reserve the right to alter specifications without notice.

This page is left blank intentionally.

Dimensional data not binding. Dimensions in mm, inches are approximate. We reserve the right to alter specifications without notice.

TAG Synergy Elite Cleat System

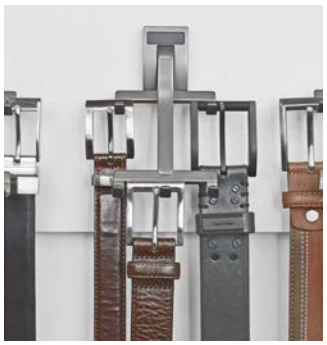

> Hooks are to be used on customer supplied cleat boards
> There are 5 mm (3/16") pins on back of base to help pre-install by lining up the hooks on the boards
> To secure hook to board, there are two #8 holes for screws with cover caps to conceal from view
> Cleat mount
> Material: Zinc

→ Tie Hook

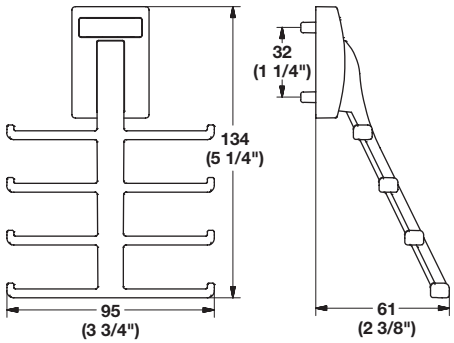

> Stores 8 ties
> L x W x H: 95 x 61 x 134 (3 3/4" x 2 3/8" x 5 1/4")

Finish	Item No.
polished chrome	807.69.200
matt aluminum	807.69.000
matt nickel	807.69.600
matt gold	807.69.901
black	807.68.300
slate	807.69.370

Supplied With
Screws
Cover caps

→ Belt Hook

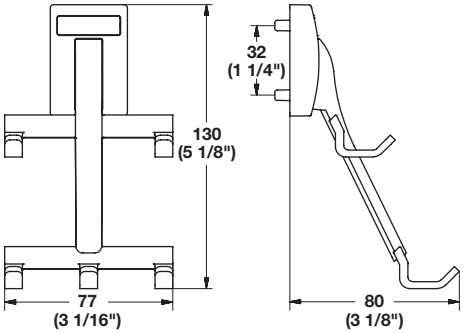

> Stores 5 belts
> L x W x H: 77 x 80 x 130 mm (3 1/16" x 3 1/8" x 5 1/8")

Finish	Item No.
polished chrome	807.69.220
matt aluminum	807.69.020
matt nickel	807.69.620
matt gold	807.69.920
black	807.68.320
slate	807.69.320

Supplied With
Screws
Cover caps

Dimensional data not binding. Dimensions in mm, inches are approximate. We reserve the right to alter specifications without notice.

HÄFELE

TAG Synergy Elite Cleat System

→ Waterfall Hook

> Cleat mount
> Each hook holds 3 coat hangers
> L x W x H: 95 x 12 x 165 mm (3 3/4" x 1/2" x 6 1/2")
> Material: Zinc

Finish	Item No.
polished chrome	807.69.260
matt aluminum	807.69.060
matt nickel	807.69.660
matt gold	807.69.960
black	807.68.360
slate	807.69.360

Supplied With
Screws
Cover caps

→ Double Hook

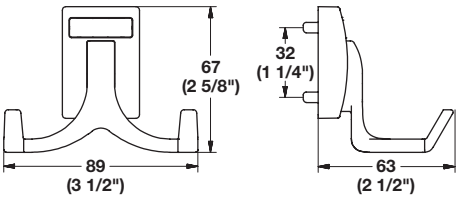

> Cleat mount
> L x W x H: 89 x 63 x 67 mm (3 1/2" x 2 1/2" 2 5/8")
> Material: Zinc

Finish	Item No.
polished chrome	807.69.240
matt aluminum	807.69.040
matt nickel	807.69.640
matt gold	807.69.940
black	807.68.340
slate	807.69.340

Supplied With
Screws
Cover caps

Dimensional data not binding. Dimensions in mm, inches are approximate. We reserve the right to alter specifications without notice.

TAG Synergy Elite Cleat System

> Hooks are to be used on customer supplied cleat boards
> There are 5 mm (3/16") pins on back of base to help pre-install by lining up the hooks on the boards
> To secure hook to board, there are two #8 holes for screws with cover caps to conceal from view
> Cleat mount
> Material: Zinc

→ Coat Hook

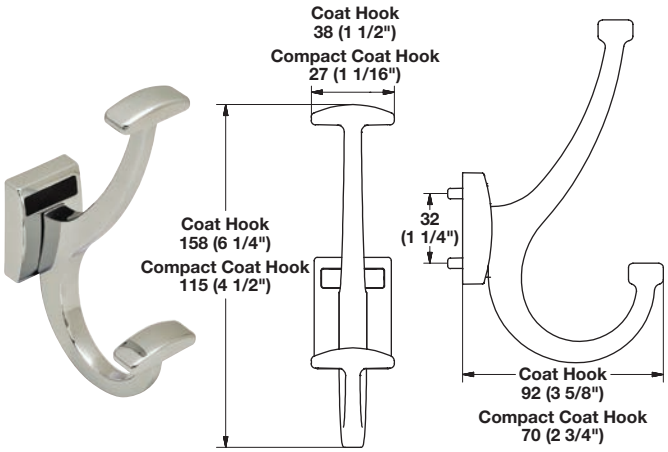

> L x W x H: 38 x 92 x 158 mm (1 1/2" x 3 5/8" x 6 1/4")

Finish	Coat Hook	Compact Coat Hook
polished chrome	807.69.230	807.69.231
matt aluminum	807.69.030	807.69.031
matt nickel	807.69.630	807.69.631
matt gold	807.69.930	807.69.931
black	807.68.330	807.68.331
slate	807.69.330	807.69.331

Supplied With
Screws
Cover caps

→ Broom Hook

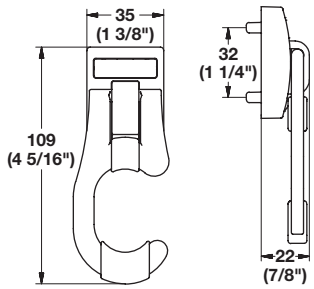

> For long handle items like brooms and mops
> L x W x H: 35 x 22 x 109 mm (1 3/8" x 7/8" x 4 5/16")

Finish	Item No.
polished chrome	807.69.250
matt aluminum	807.69.050
matt nickel	807.69.650
matt gold	807.69.950
black	807.68.350
slate	807.69.350

Supplied With
Screws
Cover caps

Dimensional data not binding. Dimensions in mm, inches are approximate. We reserve the right to alter specifications without notice.

TAG Synergy Elite

> Easy to use, pull out and rotate for full viewing
> Mounts with four screws
> Slides have detent in and out to hold mirror in place
> Ideal for spaces where installation is required on the outside of a panel and rotated inwards
> Mirror extends 151 mm (6") from the front edge of the closet allowing up to 345° rotation
> Provides great viewing angles from almost anywhere in a closet
> 889 mm (35") height mirrors allow for installation above jewelry drawers, inside upper hanging sections or anywhere you're a little short on space.
> Length: 333 mm (13 1/8")
> Width: 889 mm (35") mirror: 33 mm (1 5/16")
1203 mm (47 3/8") mirror: 38 mm (1 1/2")
> Material: Aluminum

→ Full Rotation Mirror

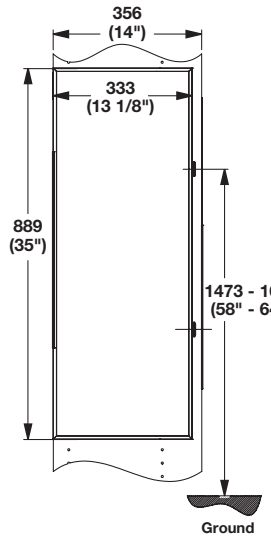

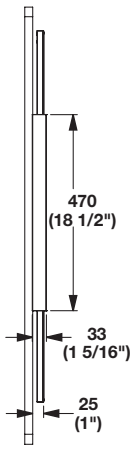

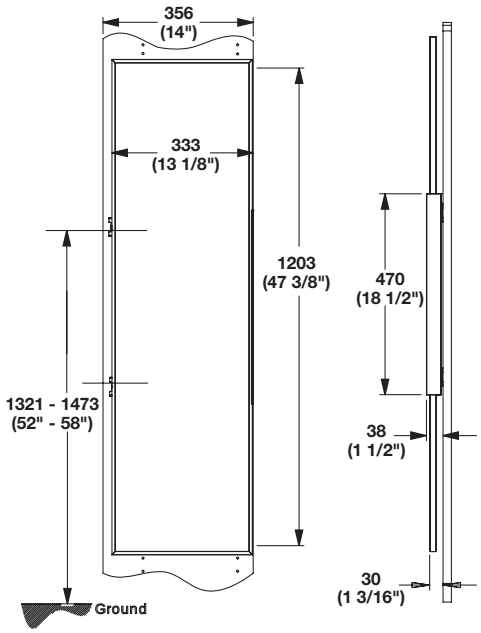

Finish	Height	Item No.
matt aluminum	889 (35")	805.73.021
black	889 (35")	805.73.421
matt gold	889 (35")	805.73.921
matt nickel	889 (35")	805.73.621
slate	889 (35")	805.73.321
matt aluminum	1203 (47 3/8")	805.73.022
black	1203 (47 3/8")	805.73.422
matt gold	1203 (47 3/8")	805.73.922
matt nickel	1203 (47 3/8")	805.73.622
slate	1203 (47 3/8")	805.73.322

Dimensional data not binding. Dimensions in mm, inches are approximate. We reserve the right to alter specifications without notice.

TAG Synergy Elite

- Slim, full frame mirror features a low profile design
- Perfect for unused wall space or behind a door
- Style and finish coordinate perfectly with all Synergy Elite and Synergy accessories
- L x W: 333 x16 mm (13 1/8" x 5/8")
- Material: Aluminum

→ Fixed Mirror

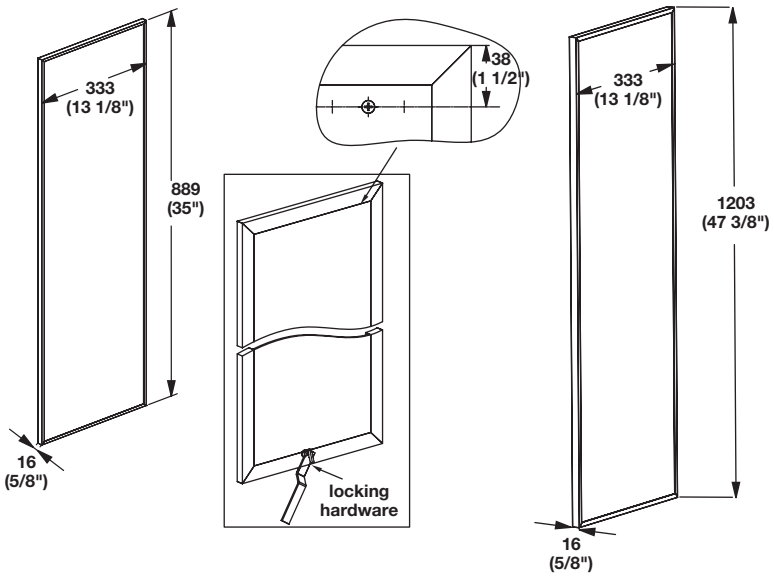

Finish	Height	Item No.
matt aluminum	889 (35")	805.73.011
black	889 (35")	805.73.411
matt gold	889 (35")	805.73.911
matt nickel	889 (35")	805.73.611
slate	889 (35")	805.73.311
matt aluminum	1203 (47 3/8")	805.72.030
black	1203 (47 3/8")	805.72.430
matt gold	1203 (47 3/8")	805.72.930
matt nickel	1203 (47 3/8")	805.72.630
slate	1203 (47 3/8")	805.72.330

Supplied With
Locking and Installation Hardware

Dimensional data not binding. Dimensions in mm, inches are approximate. We reserve the right to alter specifications without notice.

TAG Signature Collection

> Protective cap reduces noise and prevents scratching
> Unique design adds style to any closet
> Flexible mounting options allow the tube to be mounted to side panels or suspended from a shelf
> Finishes match Synergy Elite and Synergy accessories

→ Wardrobe Tube

> D x H x L: 19 x 32 x 2438 mm (3/4" x 1 1/4" x 8')
> Material: Aluminum, anodized; Cap: plastic

Finish/Cap	Item No.
polished chrome/clear	801.78.212
matt aluminum/clear	801.78.412
matt nickel/clear	801.78.612
matt gold/clear	801.78.912
black/black	801.78.712
slate/black	801.78.312

Supplied With
18 pcs.
8 pcs. (matt gold only)

→ Wardrobe Tube Support

> W x H: 32 x 45 mm (1 1/4" x 1 3/4")
> Material: Zinc

Finish	Item No.
polished chrome	803.39.250
matt aluminum	803.39.450
matt nickel	803.64.650
matt gold	803.39.950
black	803.64.450
slate	803.39.750

→ Wardrobe Tube Suspended Support

> W x H: 32 x 92 mm (1 1/4" x 3 5/8")
> Material: Zinc

Finish	Item No.
polished chrome	803.64.200
matt aluminum	803.64.000
matt nickel	803.64.600
matt gold	803.64.900
black	803.64.500
slate	803.64.300

Supplied With
Mounting hardware

→ Wardrobe Tube Center Suspended Support

> W x H: 32 x 92 mm (1 1/4" x 3 5/8")
> Material: Zinc

Finish	Item No.
polished chrome	802.13.200
matt aluminum	802.13.000
matt nickel	802.13.600
matt gold	802.13.900
black	802.13.500
slate	802.13.300

Supplied With
Mounting hardware

Dimensional data not binding. Dimensions in mm, inches are approximate. We reserve the right to alter specifications without notice.

TAG Signature Collection

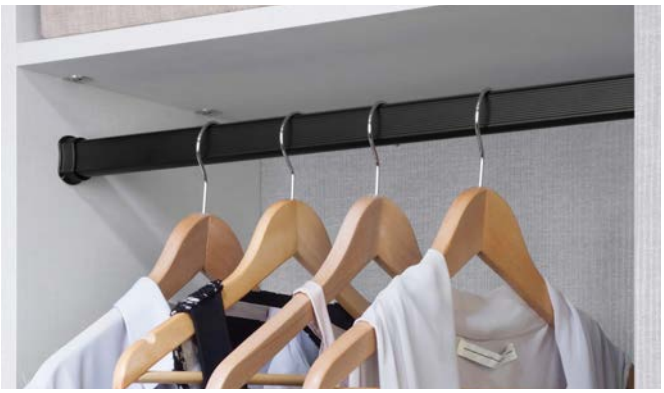

> Protective cap reduces noise and prevents scratching
> Unique design adds style to any closet
> Flexible mounting options allow the tube to be mounted to side panels or suspended from a shelf
> Finishes match Synergy Elite and Synergy accessories
> D x H: 19 x 32 mm (3/4" x 1 1/4")
> Material: Tube: Aluminum, anodized, Supports: Zinc; Cap: Plastic

Service+

→ Wardrobe Tube with Supports

Length	polished chrome/ clear cap	matt aluminum/ clear cap	matt nickel/ clear cap	matt gold/ clear cap	black/ black cap	slate/ black cap
451 (17 3/4")	801.78.291	801.78.491	801.78.691	801.78.991	801.78.715	801.78.391
603 (23 3/4")	801.78.292	801.78.492	801.78.692	801.78.992	801.78.716	801.78.392
756 (29 3/4")	801.78.293	801.78.493	801.78.693	801.78.993	801.78.717	801.78.393
908 (35 3/4")	801.78.294	801.78.494	801.78.694	801.78.994	801.78.718	801.78.394
1217 (47 15/16")	801.78.295	801.78.495	801.78.695	801.78.995	801.78.719	801.78.395

Supplied With
Tube
Supports

Dimensional data not binding. Dimensions in mm, inches are approximate. We reserve the right to alter specifications without notice.

TAG Synergy

→ Wardrobe Tube

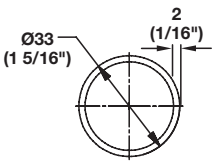

> Round
> Ø x L: 33 x 2438 mm (1 5/16" x 8')
> Material: Aluminum

Finish	Anodized	Powder-coated
polished chrome	801.42.200	–
matt aluminum	801.42.900	–
matt nickel	801.42.600	–
black	830.28.715	–
white	–	801.42.710

Supplied With
12 pcs.

→ Wardrobe Tube Support

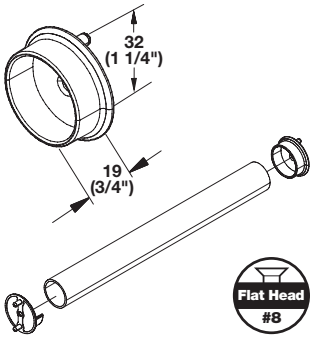

> With two pins for 5 mm holes
> 32 mm (1 1/4") spacing with an additional screw hole for side panel mounting
> Material: Zinc-plated

Finish	Anodized	Powder-coated
polished chrome	803.56.200	–
matt aluminum	803.56.900	–
matt nickel	803.56.600	–
black	803.56.300	–
white	–	803.56.710

Supplied With
1 Half closed support
1 Fully closed support

→ Wardrobe Tube Center Support

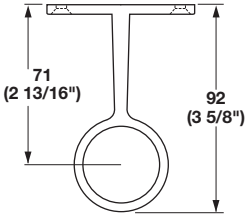

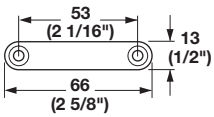

> Surface mounted
> For Ø33 mm (1 5/16") tube
> Material: Zinc die-cast

Finish	Item No.
polished chrome	802.06.267
matt aluminum	802.06.367
matt nickel	802.06.667
black	802.06.767

Supplied With
Screws

Flat head screws pages 12.7–12.8, 12.10, 12.13

Dimensional data not binding. Dimensions in mm, inches are approximate. We reserve the right to alter specifications without notice.

TAG Synergy

> Round
> Ø: 33 mm (1 5/16")
> Material: Aluminum, anodized or powder-coated

Service+

→ Wardrobe Tube with Supports

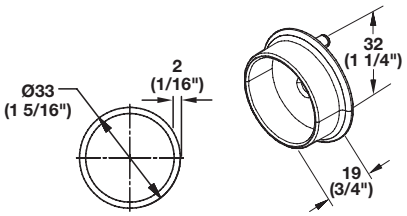

Length	white powder-coated	polished chrome	matt aluminum	matt nickel	black
451 (17 3/4")	801.42.735	801.42.235	801.42.935	801.42.635	830.28.830
603 (23 3/4")	801.42.736	801.42.236	801.42.936	801.42.636	830.28.831
756 (29 3/4")	801.42.737	801.42.237	801.42.937	801.42.637	830.28.832
908 (35 3/4")	801.42.738	801.42.238	801.42.938	801.42.638	830.28.833
1217 (47 15/16")	801.42.734	801.42.234	801.42.934	801.42.634	830.28.834

Supplied With
Tube
2 Supports

Flat head screws pages 12.7–12.8, 12.10, 12.13

Dimensional data not binding. Dimensions in mm, inches are approximate. We reserve the right to alter specifications without notice.

TAG Synergy

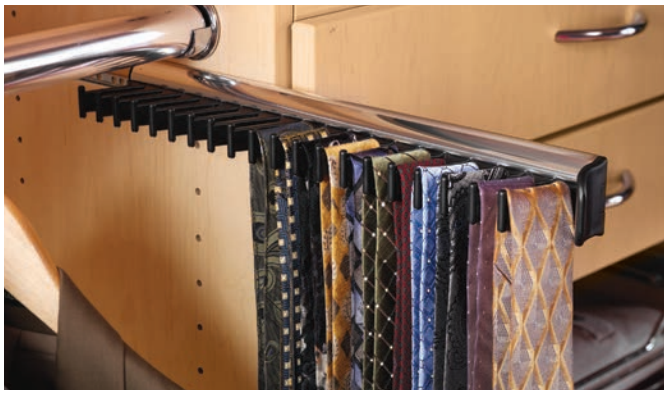

→ Tie Rack with 3/4 extension slide

VARIANTA 5

> W x H: 56 x 43 mm (2 3/16" x 1 11/16")
> Material: Aluminum, anodized or powder-coated

Finish	20 hook length: 358 mm (14 1/8")	17 hook length: 303 mm (11 15/16")
polished chrome	807.54.233	807.54.232
matt aluminum	807.54.933	807.54.932
matt nickel	807.54.633	807.54.632
black	807.54.333	807.54.332
white powder-coated	807.54.773	807.54.772

→ Belt Rack with 3/4 extension slide

VARIANTA 5

> W x H: 56 x 43 mm (2 3/16" x 1 11/16")
> Material: Aluminum, anodized or powder-coated

Finish	6 hook length: 358 mm (14 1/8")	5 hook length: 303 mm (11 15/16")
polished chrome	807.54.231	807.54.230
matt aluminum	807.54.931	807.54.930
matt nickel	807.54.631	807.54.630
black	807.54.331	807.54.330
white powder-coated	807.54.771	807.54.770

Flat head screws pages 12.7–12.8, 12.10, 12.13

Dimensional data not binding. Dimensions in mm, inches are approximate. We reserve the right to alter specifications without notice.

TAG Synergy

→ Scarf Rack with 3/4 extension slide

VARIANTA ⌀5

> With 6 hooks
> L x W x H: 358 x 61 x 43 mm (14 1/8" x 2 3/8" x 1 11/16")
> Material: Aluminum, anodized

Finish	Item No.
polished chrome	807.54.234
matt aluminum	807.54.934
matt nickel	807.54.634
black	807.54.334

→ Valet

VARIANTA ⌀5

> For clothes hangers and hanging garment bags
> Mounts to a side panel
> Weight capacity: 30 lbs. in vertical position
> W x H: 28 x 48 mm (1 1/16" x 1 7/8")
> Material: Aluminum, anodized or powder-coated

Finish	Length: 362 (14 1/4") Extension: 243 (9 9/16")	Length: 300 (11 13/16") Extension: 192 (7 9/16")
polished chrome	808.70.231	808.70.230
matt aluminum	808.70.931	808.70.930
matt nickel	808.70.631	808.70.630
black	808.70.331	808.70.330
white powder-coated	808.70.771	808.70.770

Varianta screws page 12.16

Dimensional data not binding. Dimensions in mm, inches are approximate. We reserve the right to alter specifications without notice.

TAG Synergy

> Rear rod can be positioned upwards, allowing shoes to be displayed on an incline.

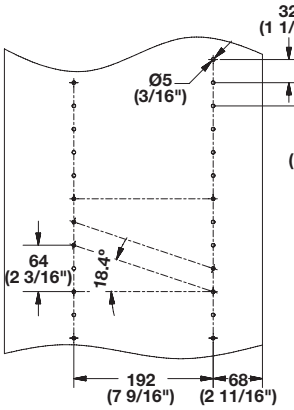

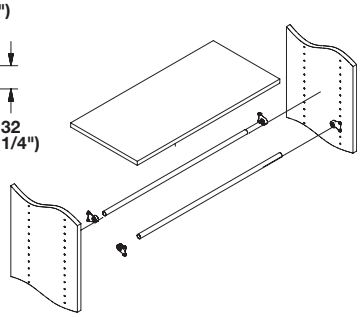

The rail can be positioned on the same plane – shoes are displayed in a horizontal plane.

→ Shoe Rail

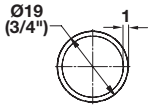

> Cut-to-size
> Requires shoe rail bracket, order separately
> Length: 914 mm (36")
> Ø: 19 mm (3/4")
> Material: Aluminum, anodized

Finish	Item No.
polished chrome	805.87.210
matt aluminum	805.87.910

→ Shoe Rail Bracket

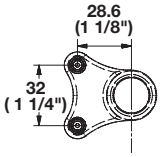

> To mount rails, order separately
> Connects shoe rail to side panel using 32 mm (1 1/4") line bore holes with 5 mm press in dowels
> Material: Plastic

Color	Item No.
black	805.87.993

Dimensional data not binding. Dimensions in mm, inches are approximate. We reserve the right to alter specifications without notice.

TAG Synergy

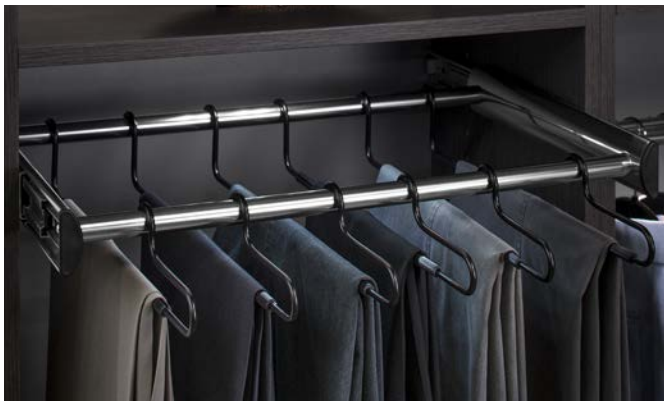

→ Pants Rack

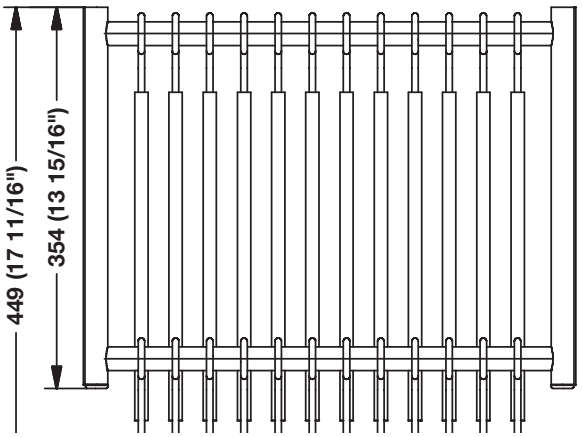

> Pull-out, with full extension slides
> D x H: 354 x 58 mm (14" x 2 5/16")
> Material: Aluminum, anodized

Length	# of Hangers	polished chrome	matt aluminum	matt nickel	black
457 (18")	12	805.58.231	805.58.931	805.58.631	805.58.431
610 (24")	18	805.58.233	805.58.933	805.58.633	805.58.433
762 (30")	24	805.58.235	805.58.935	805.58.635	805.58.435

Supplied With
Frame
Hangers

→ Wire Pants Hanger

> For pant rack
> Material: Steel, powder-coated

Color	Item No.
black	805.58.330

Supplied With
18 pcs.

→ Garment Clip

> Attaches to hangers for skirts, pants, etc.
> Material: Plastic

Color	Item No.
black	805.58.331

Note
2 required per hanger.

Flat head screws pages 12.7–12.8, 12.10, 12.13

Dimensional data not binding. Dimensions in mm, inches are approximate. We reserve the right to alter specifications without notice.

TAG Synergy

→ Hamper

VARIANTA 5

> Pull-out, with full extension slides and removable bags
> D x H: 355 x 546 mm (14" x 21 1/2"); height is from the top of the handle to the bottom of the bag
> Material: Aluminum, anodized; Bag: Nylon; Finish: black

Width	Bags	polished chrome	matt aluminum	matt nickel	black
457 (18")	1 large bag	807.52.231	807.52.931	807.52.631	807.52.331
610 (24")	2 small bags	807.52.233	807.52.933	807.52.633	807.52.333
762 (30")	1 large & 1 small bag	807.52.235	807.52.935	807.52.635	807.52.335

Supplied With
Frame
Bag/Bags

Note
Handles are above the bags, which allow the bags to be easily removed.

Varianta screws page 12.16

Dimensional data not binding. Dimensions in mm, inches are approximate. We reserve the right to alter specifications without notice.

TAG Synergy

> Frame attaches to the back of a tilt-out door
> Flap Stay Kit sold separately, see page **4.119**

→ Tilt-out Hamper

Hole Pattern

Dimension	Width
405 (15 15/16")	18"
557 (21 15/16")	24"
710 (27 15/16")	30"

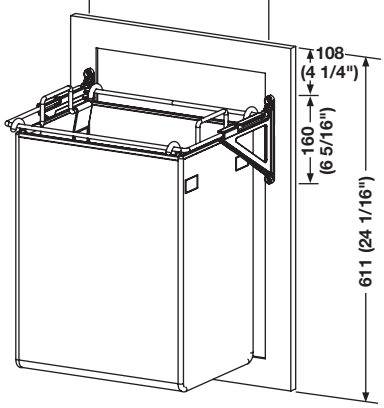

> Screw mounted to back of door, with removable bags
> D x H: 353 x 557 mm (13 7/8" x 22"); height is from the top of the frame to the bottom of the bag
> Material: Frame: Plastic/Steel; Finish: black
Bag: Nylon; Finish: black

Width	Bags	Item No.
457 (18")	1 large bag	547.43.311
610 (24")	2 small bags	547.43.313
762 (30)	1 large & 1 small bag	547.43.315

Supplied With
Frame
Bag/Bags

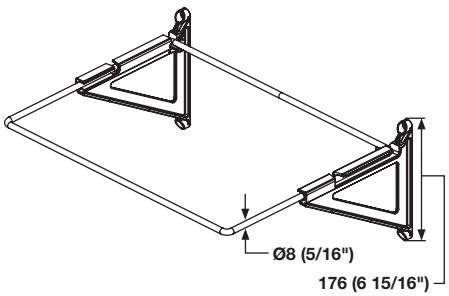

→ Replacement Handles

> Without bags
> Material: Steel, rubber

Finish	Item No.
black	547.43.399

Supplied With
2 Handles

→ Replacement Bag

> Without handles
> Material: Nylon; Finish: black

W x D x H	Item No.
286 x 280 x 506 (11 1/4" x 11" x 19 15/16")	547.43.390
403 x 280 x 506 (15 7/8" x 11" x 19 15/16")	547.43.391

Dimensional data not binding. Dimensions in mm, inches are approximate. We reserve the right to alter specifications without notice.

Laundry Hampers

> The door is opened under spring tension approximately 27° by simply applying pressure directly to the door
> The release function can be activated with light pressure on the door
> Door opens automatically
> To close door, light pressure against door is required
> Material: Steel; Finish: chrome-plated

Note
Flap-ex flap hinge and mini latch are required for door operation, see page **4.119**.

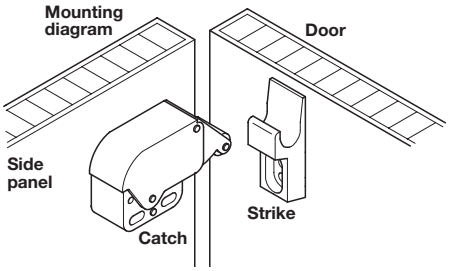

→ Laundry Hamper

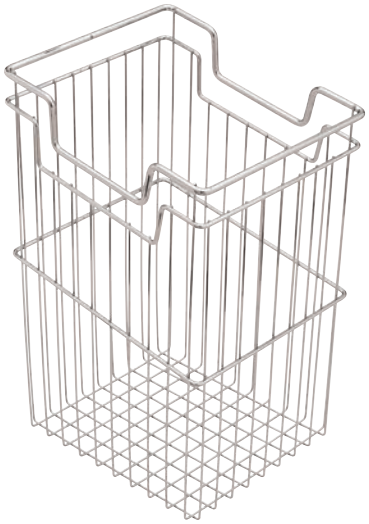

> With lowered handles, hangs on mounting rail
> For cabinet width: 300 mm (11 3/4")
> Capacity: 23.5 liters (6 gal.)
> W x D: 238 x 259 mm (9 3/8" x 10 3/16")
> Height: rear 365 mm (14 3/8"); front 420 mm (16 1/2")

	Item No.
	540.02.112

> With lowered handles, hangs on mounting rail
> For cabinet width: 450 mm (17 3/4")
> Capacity: 39 liters (10 gal.)
> W x D: 388 x 259 mm (15 1/4" x 10 3/16")
> Height: rear 365 mm (14 3/8"); front 420 mm (16 1/2")

	Item No.
	540.02.121

→ Mounting Bracket

> For laundry hamper above
> Screw mounted
> Width: 214 mm (8 7/16")
> Spacing between holes: 160 mm (6 19/64")

	Item No.
	540.02.194

Pan head screws pages 12.9-12.10

Dimensional data not binding. Dimensions in mm, inches are approximate. We reserve the right to alter specifications without notice.

Laundry Hampers

→ Hook-on Hamper, slanted

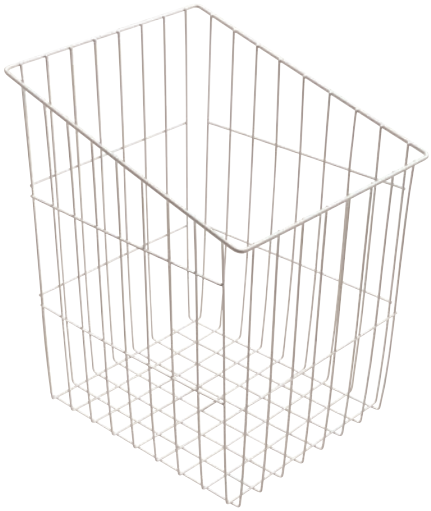

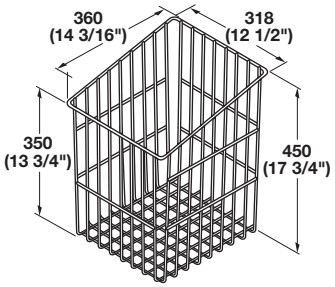

> For hanging on mounting bracket below
> Inside cabinet width: min. 343 mm (13 1/2")
> Material: Steel wire, epoxy-coated

Finish	Item No.
white	540.09.755

→ Mounting Bracket

> For laundry hamper above, screw mounted
> W x D x H: 225 x 16 x 26 mm (8 7/8" x 5/8" x 1")
> Spacing between holes: 190 mm (7 1/2")
> Material: Steel

Finish	Item No.
white	540.06.996

Dimensional data not binding. Dimensions in mm, inches are approximate. We reserve the right to alter specifications without notice.

HÄFELE

Laundry Hampers

→ Hook-on Hamper, slanted

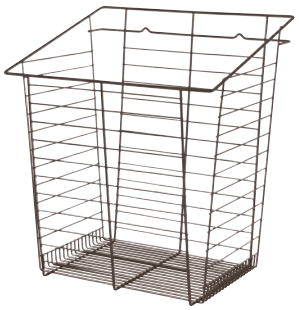

> Mount by hanging on the back of a tilt-out door using the mounting bracket below
> Unique V notches indicate the location of the mounting bracket Height: 495 mm (19 1/2")
> Material: Steel

Width	Depth	chrome-plated	white powder-coated	matt nickel powder-coated	matt gold powder-coated	slate painted	black powder-coated
432 (17")	341 (13 7/16")	547.42.231	547.42.731	547.42.631	547.42.831	547.42.531	547.42.331
	392 (15 7/16")	547.42.241	547.42.741	547.42.641	547.42.841	–	547.42.341
584 (23")	341 (13 7/16")	547.42.232	547.42.732	547.42.632	547.42.832	547.42.532	547.42.332
	392 (15 7/16")	547.42.242	547.42.742	547.42.642	547.42.842	–	547.42.342

Note Flap stays and hinges, refer to next page.

→ Bracket

Pan Head #8

> For laundry hamper above
> Screw mounted with 4.0 mm screws
> Space between holes: 160 mm (6 5/16")
> W x D x H: 214 x 25 x 68 mm (8 7/16" x 1" x 2 11/16")
> Material: Steel

Finish	Item No.
chrome-plated	547.42.990
white powder-coated	547.42.991
matt nickel powder-coated	547.42.690
matt gold painted	547.42.890
slate painted	547.42.590
black powder-coated	547.42.390

→ Laundry Hamper Bag

> Handles attached on both sides and elastic band around the top edge allow for easy removal
> Height: 495 mm (19 1/2")
> Material: 100% Cotton; Color: cream

Width	Depth	Item No.
432 (17")	341 (13 7/16")	547.42.485
	392 (15 7/16")	547.42.486
584 (23")	341 (13 7/16")	547.42.487
	392 (15 7/16")	547.42.488

→ Laundry Hamper Liner

> Creates a smooth, solid surface on the hamper bottom
> Material: Plastic, translucent

Width	Depth	Item No.
432 (17")	341 (13 7/16")	547.95.431
	392 (15 7/16")	547.95.433
584 (23")	341 (13 7/16")	547.95.432
	392 (15 7/16")	547.95.434

Pan head screws pages 12.9-12.10

Dimensional data not binding. Dimensions in mm, inches are approximate. We reserve the right to alter specifications without notice.

Laundry Hampers

→ Flap Stay Hamper Kit

> Material: Steel

Finish	Item No.
nickel-plated	547.42.993
black	547.42.994

Supplied With

Smove shock absorber
Smove adapter bracket
2 Duo flap stays
2 37 mm Cabinet brackets
2 Wood door brackets
4 Varianta screws
6 Countersunk wood screws
2 Pan head screws
4 mm hex key

→ FLAP-EX Flap Hinge

The door is opened by pushing against the door panel. The pressure triggers the release spring in the fitting and the door opens automatically.
To close the door, slightly press against the door panel.

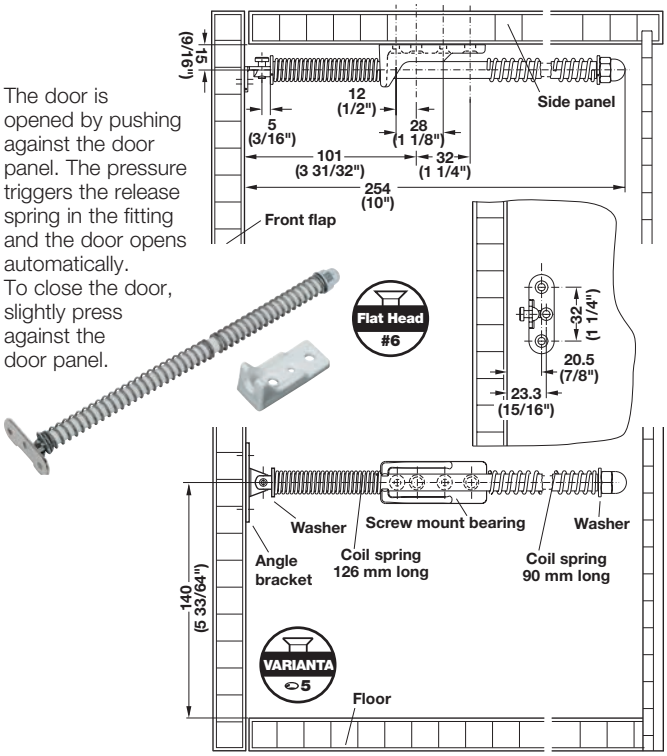

> Particularly suitable for installing in cabinets with a laundry hamper
> The door is opened approximately 27°
> When the door is closed, the flap is pushed back into the cabinet and secured by the Mini Latch, required
> For cabinet sizes from 820 mm (32 5/16") high, 400 mm (15 3/4") wide inside cabinet depth of at least 270 mm (10 5/8")
> Material: Steel; Bearing: Plastic

Finish	Item No.
nickel-plated	365.52.708

Supplied With

Angle bracket, Rod and plastic sleeve, 2 Washers, 2 Coil Springs, Bearing

Note

Completely assembled. For installation of the front flap, 2 cup hinges and a Mini Latch are required. The hinge with the coil springs is designed to support a particle board front with maximum dimensions 590 mm (23 1/4") high, 400 mm (15 3/4") wide and 19 mm (3/4") thick and a maximum weight when full of 5 kg (11 lbs).

Mounting Instructions

Screw the angle bracket to front panel and screw mount bearing to cabinet side panel; see mounting drawing on the right. Push round rod into the screw-on bearing between the two coil springs.

→ Mini Latch

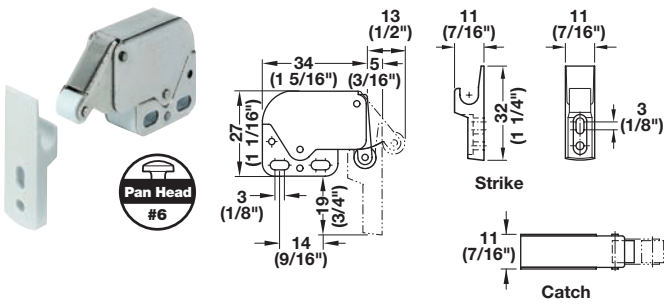

> Screw mounted
> With strike
> Material: Catch: Steel; Strike: Plastic; Color: white

Finish	Item No.
nickel-plated	245.54.701

Varianta screws	page 12.16
Flat head screws	pages 12.7–12.8, 12.10, 12.13
Pan head screws	pages 12.9-12.10

Dimensional data not binding. Dimensions in mm, inches are approximate. We reserve the right to alter specifications without notice.

Hailo Laundry Hamper

> Sidewall mounted with over extension soft close slides
> Supplied with a lid that can be used for storage or to contain odors
> Weight capacity: 100 lbs.
> Material: Steel; Hampers: Plastic; Lid: Steel
Finish: Frame/Hamper: white/white/light blue

soft&silent

→ Laundry Hamper 45

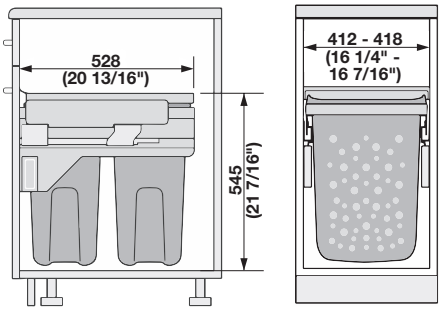

> For 457 mm (18") wide base cabinets
> Capacity: 2 x 35 qts. (70 qts.)
> W x H x D: 412-418 x 545 x 528 mm
(16 1/4"-16 7/16" x 21 7/16" x 20 13/16")

	Item No.
	502.72.722

Supplied With
2 Hampers, Built-in Lid

→ Laundry Hamper 45 - Short

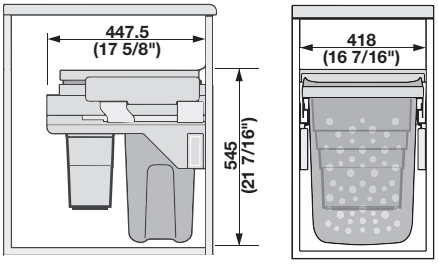

> For 457 mm (18") wide base cabinets
> Capacity: Hamper - 35 qts., Bin - 12 qts.
> W x H x D: 418 x 545 x 447.5 mm
(16 7/16" x 21 7/16" x 17 5/8")

	Item No.
	502.72.701

Supplied With
Hamper, Bin, Built-in Lid

→ Laundry Hamper 60

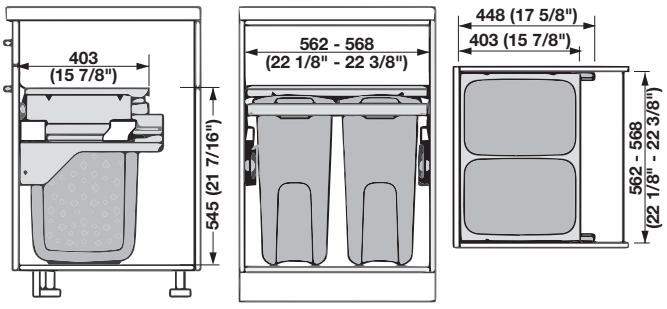

> For 610 mm (24") wide base cabinets
> Capacity: 2 x 35 qts. (70 qts.)
> W x H x D: 562-568 x 545 x 448 mm
(22 1/8"-22 3/8" x 21 7/16" x 17 5/8")

	Item No.
	502.72.705

Supplied With
2 Hampers, Built-in Lid

→ Replacement Hampers

> Capacity: 35 qts.
> Material: Plastic

Color	Item No.
white	502.72.990
blue	502.72.993

Dimensional data not binding. Dimensions in mm, inches are approximate. We reserve the right to alter specifications without notice.

Matrix Laundry Hamper

- For vanity or laundry cabinets
- Progressive action runners with soft close
- Double wall steel frame system provides heavy duty structure and a stylish design
- Bottom mount unit designed for face frame or frameless cabinets
- Quick mounting, bottom bracket rests against the back of the face frame (3/4" from front edge)
- Add your door thickness for inset applications
- Weight capacity: 50 kg (110 lbs.)
- For 457 mm (18") wide base cabinets with no drawer above
- Minimum Opening Width:
  Face frame - 375 mm (14 3/4")
  Frameless - 394 mm (15 1/2")
  Door brackets are reversable for full overlay 5 piece doors - 413 mm (16 1/4")
- D x H: min. 500 x 563 mm (19 11/16" x 22 3/16")
- Material: Steel; Bottom and Back: Melamine (2-Sided); Bag: Nylon

soft&silent

→ Laundry Hamper 18"

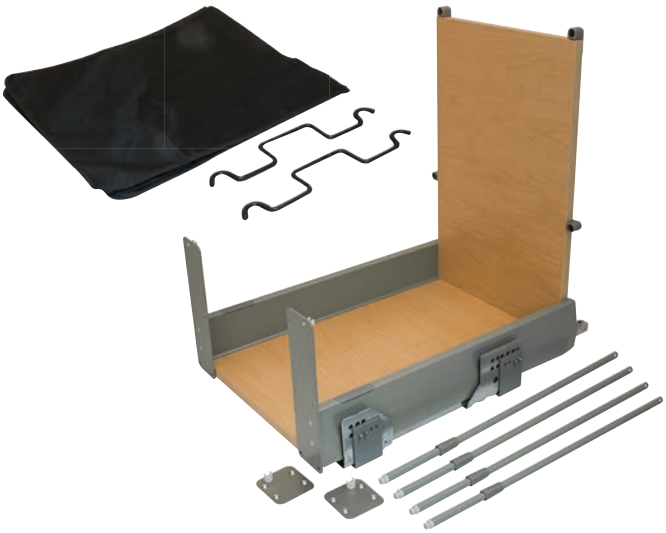

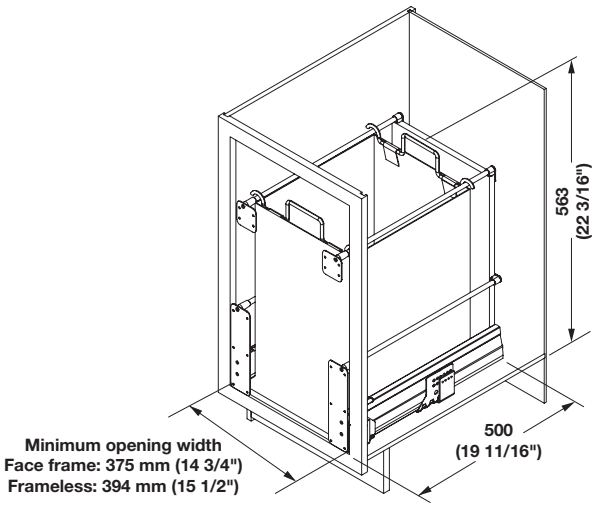

Frame	Bottom and Back	Bag	Item No.
white	white	black	503.15.765
anthracite	black	black	503.15.365
champagne	maple	black	503.15.865

Supplied With
Mounting screws
Mounting instructions

Dimensional data not binding. Dimensions in mm, inches are approximate. We reserve the right to alter specifications without notice.

Closet Baskets

> Ideal for storage of clothing and shoes
> Sloped basket front allows easy access to contents
> Unique side is designed with location for placement of slide
> Baskets easily disconnect for portability
> For optional closet basket liners, see page **4.123**
> For 457 mm (18"), 610 mm (24") and 762 mm (30") interior openings
> Material: Steel

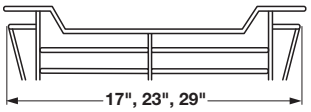

> Basket widths are measured on the second horizontal wire from top where slides attach.
> Slides add 1" of additional width.

→ Wire Basket

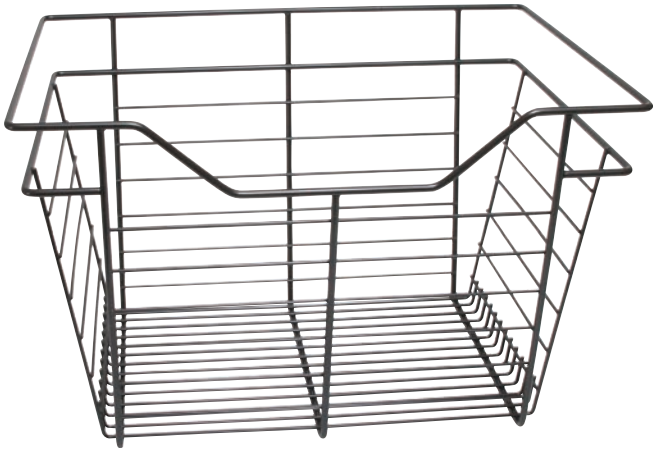

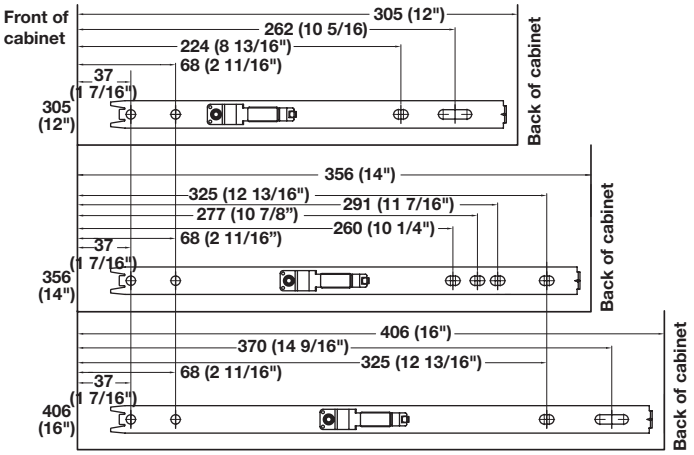

Interior opening	Width	Depth	Height	chrome-plated	white powder-coated	matt nickel powder-coated	matt gold powder-coated	slate painted	black powder-coated
457 (18")	432 (17")	305 (12")	152 (6")	547.38.212	-	-	547.38.812	-	-
			279 (11")	547.38.216	547.38.716	-	547.38.816	-	-
			432 (17")	547.38.218	547.38.718	-	547.38.818	-	-
		356 (14")	152 (6")	547.38.232	547.38.732	547.38.632	547.38.832	547.38.532	547.38.332
			279 (11")	547.38.236	547.38.736	547.38.636	547.38.836	547.38.536	547.38.336
			432 (17")	547.38.238	547.38.738	547.38.638	547.38.838	547.38.538	547.38.338
		406 (16")	152 (6")	547.38.252	547.38.752	547.38.652	547.38.852	-	547.38.352
			279 (11")	547.38.256	547.38.756	547.38.656	547.38.856	-	547.38.356
			432 (17")	547.38.258	547.38.758	547.38.658	547.38.858	-	547.38.358
610 (24")	584 (23")	305 (12")	152 (6")	547.40.212	547.40.712	-	547.40.812	-	-
			279 (11")	547.40.216	547.40.716	-	547.40.816	-	-
			432 (17")	547.40.218	547.40.718	-	547.40.818	-	-
		356 (14")	152 (6")	547.40.232	547.40.732	547.40.632	547.40.832	547.40.532	547.40.332
			279 (11")	547.40.236	547.40.736	547.40.636	547.40.836	547.40.536	547.40.336
			432 (17")	547.40.238	547.40.738	547.40.638	547.40.838	547.40.538	547.40.338
		406 (16")	152 (6")	547.40.252	547.40.752	547.40.652	547.40.852	-	547.40.352
			279 (11")	547.40.256	547.40.756	547.40.656	547.40.856	-	547.40.356
			432 (17")	547.40.258	547.40.758	547.40.658	547.40.858	-	547.40.358
762 (30")	737 (29")	305 (12")	152 (6")	547.41.212	-	-	547.41.812	-	-
			279 (11")	547.41.216	-	-	547.41.816	-	-
			432 (17")	547.41.218	-	-	547.41.818	-	-
		356 (14")	152 (6")	547.41.232	547.41.732	547.41.632	547.41.832	547.41.532	547.41.332
			279 (11")	547.41.236	547.41.736	547.41.636	547.41.836	547.41.536	547.41.336
			432 (17")	547.41.238	547.41.738	547.41.638	547.41.838	547.41.538	547.41.338
		406 (16")	152 (6")	547.41.252	547.41.752	547.41.652	547.41.852	-	547.41.352
			279 (11")	547.41.256	547.41.756	547.41.656	547.41.856	-	547.41.356
			432 (17")	547.41.258	547.41.758	547.41.658	547.41.858	-	547.41.358

Supplied With Basket, Slides

Dimensional data not binding. Dimensions in mm, inches are approximate. We reserve the right to alter specifications without notice.

Liners

> For baskets on page **4.122**

→ Cloth Basket Liners

> Liners affix to the basket with fabric loops with hook and loop fasteners
> Liners for 432 mm (17") high baskets have handles
> Material: 100% Cotton; Color: cream

For basket sizes			
Width	**Depth**	**Height**	**Item No.**
432 (17")	356 (14")	152 (6")	547.35.484
		279 (11")	547.35.485
		432 (17")	547.35.486
	406 (16")	152 (6")	547.35.487
		279 (11")	547.35.488
		432 (17")	547.35.489
584 (23")	356 (14")	152 (6")	547.36.484
		279 (11")	547.36.485
		432 (17")	547.36.486
	406 (16")	152 (6")	547.36.487
		279 (11")	547.36.488
		432 (17")	547.36.489
737 (29")	356 (14")	152 (6")	547.37.484
		279 (11")	547.37.485
		432 (17")	547.37.486
	406 (16")	152 (6")	547.37.487
		279 (11")	547.37.488
		432 (17")	547.37.489

→ Plastic Basket Liners

> Ideal for storage of clothing and other items when a solid bottom is needed
> Material: Plastic, translucent

For basket sizes			
Width	**Depth**	**Height**	**Item No.**
432 (17")	356 (14")	152 (6")	547.98.452
		279 (11") and 432 (17")	547.98.441
	406 (16")	152 (6")	547.98.472
		279 (11") and 432 (17")	547.98.461
584 (23")	356 (14")	152 (6")	547.98.454
		279 (11") and 432 (17")	547.98.443
	406 (16")	152 (6")	547.98.474
		279 (11") and 432 (17")	547.98.463
737 (29")	356 (14")	152 (6")	547.98.456
		279 (11") and 432 (17")	547.98.445
	406 (16")	152 (6")	547.98.476
		279 (11") and 432 (17")	547.98.465

Dimensional data not binding. Dimensions in mm, inches are approximate. We reserve the right to alter specifications without notice.

HÄFELE

Wine Storage

> Ideal for storing wine and spices
> Full extension slides allow for easy access to bottles and spices
> Height: 60 mm (2 3/8")
> For 356 mm (14") deep cabinets
> Material: Steel

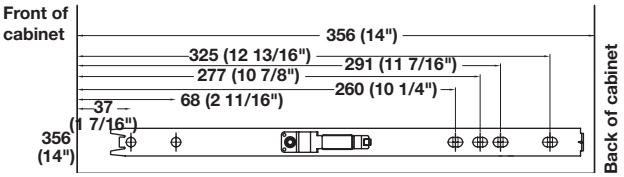

→ Wine Tray

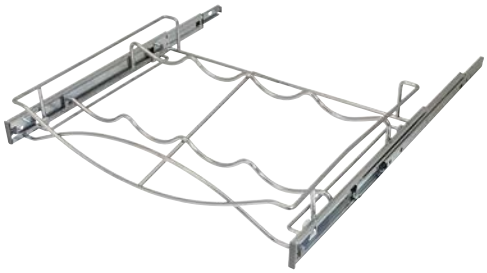

Storage	For interior cabinet width	chrome	black
4 wine bottles	457 (18")	540.50.214	540.50.314
6 wine bottles	610 (24")	540.50.217	540.50.317

Supplied With
Full extension slides

→ Spice Tray

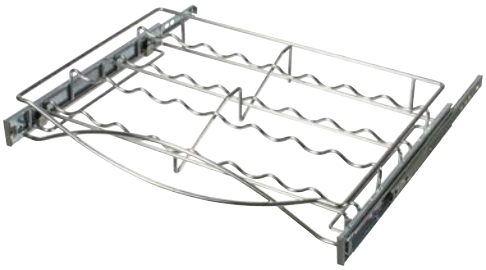

> Spices are angled for clear visibility

Storage	For interior cabinet width	chrome	black
16 spices	457 (18")	540.50.204	540.50.304
22 spices	610 (24")	540.50.207	540.50.307

Supplied With
Full extension slides

Dimensional data not binding. Dimensions in mm, inches are approximate. We reserve the right to alter specifications without notice.

Wine Storage

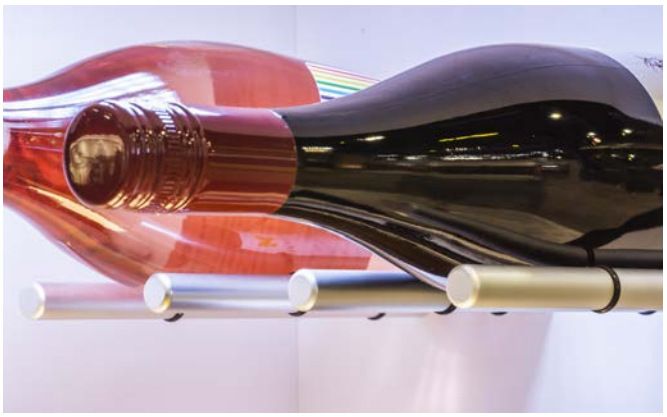

→ Wine Post

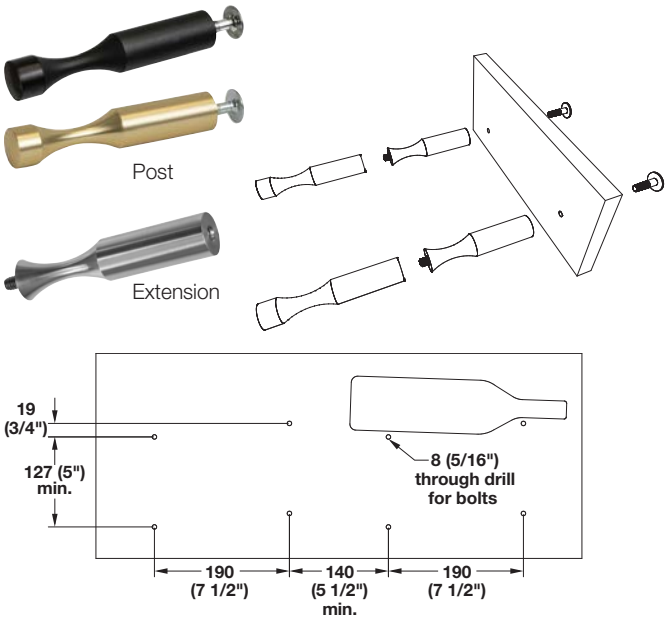

> Stores and displays wine bottles so the label can be viewed from the front
> Posts are threaded and can be expanded to store 1, 2 or 3 wine bottles
> Easily attaches to 19 mm (3/4") substrate from back
> Ø x Depth: 19 x 100 mm (3/4" x 4")
> Material: Anodized Aluminum

Description	Finish	Item No.
Post	black	521.99.300
Extension	black	521.99.310
Post	silver	521.99.900
Extension	silver	521.99.910
Post	matt gold	521.99.800
Extension	matt gold	521.99.810

Supplied With
1/4-20 screws for 19 mm (3/4") substrate

→ Wine Peg

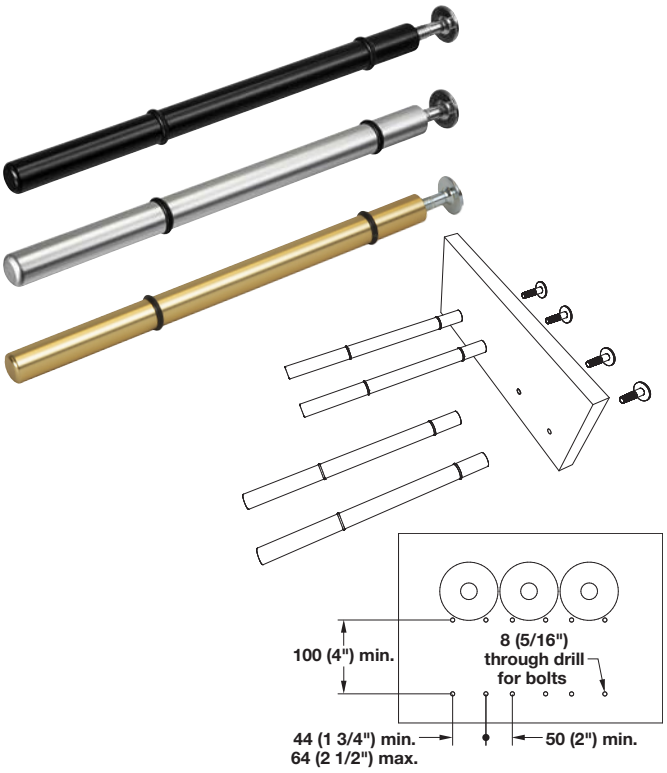

> Stores and displays wine bottles with the neck facing out
> O-rings help cushion and grip wine bottles and are designed for Bordeaux and Burgundy shaped bottles
> Easily attaches to 19 mm (3/4") substrate from back
> Ø x Depth: 12 x 190 mm (1/2" x 7 1/2")
> Material: Anodized Aluminum

Finish	Item No.
black	521.99.320
silver	521.99.920
matt gold	521.99.820

Supplied With
1/4-20 screws for 19 mm (3/4") substrate

Dimensional data not binding. Dimensions in mm, inches are approximate. We reserve the right to alter specifications without notice.

HÄFELE

Wine Storage

- > Stores and displays wine bottles so the label can be viewed from the front
- > Rods span between two vertical substrates
- > Internal splines allow rods to be cut and fastened at any length
- > Installs with 1/4-20 screws
- > Allows for flexible design options; accommodates multiple cabinet depths and bottle types
- > Ø x Depth: 19 x 100 mm (3/4" x 4")
- > Material: Anodized Aluminum

→ Parallel Rods

Finish	Length	Storage*	Item No.
black	432 (17")	1 bottle	521.99.331
black	686 (27")	2 bottles	521.99.332
black	991 (39")	3 bottles	521.99.333
silver	432 (17")	1 bottle	521.99.931
silver	686 (27")	2 bottles	521.99.932
silver	991 (39")	3 bottles	521.99.933
matt gold	432 (17")	1 bottle	521.99.831
matt gold	686 (27")	2 bottles	521.99.832
matt gold	991 (39")	3 bottles	521.99.833

Supplied With
18 pcs.

Note
Screws are not supplied.
*Storage is based on the length of the rod. Two rods are required for support.

1/4-20 Screws pages 12.18

Dimensional data not binding. Dimensions in mm, inches are approximate. We reserve the right to alter specifications without notice.

Wine Storage

> The parallel rods attach to the brackets to create a ventilated shelf
> Brackets can be used in a fixed application or add slides for a pull-out shelf
> 305 mm (12") length uses 6 parallel rods, 559 mm (22") length uses 11 parallel rods
> H x W: 25 x 12 mm (1" x 1/2")
> Material: Wood/Maple

Note
For use with parallel rods on previous page.

→ Parallel Rod Brackets

Depth	Finish	Item No.
305 (12")	black, painted	521.99.340
305 (12")	unfinished	521.99.140
559 (22")	black, painted	521.99.341
559 (22")	unfinished	521.99.141

Supplied With
Screws to attach parallel rods

Shown with black parallel rods.

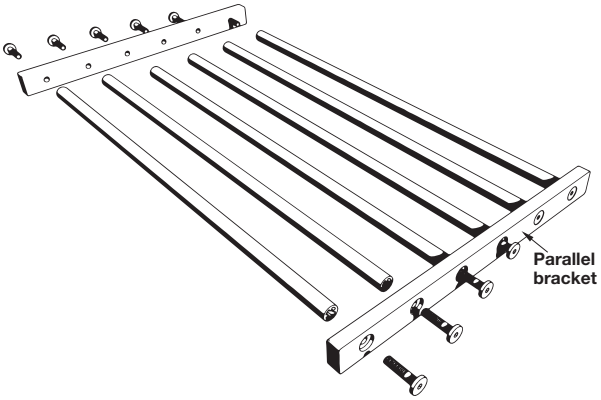

Dimensional data not binding. Dimensions in mm, inches are approximate. We reserve the right to alter specifications without notice.

HÄFELE

Shoe Fences

> For shelves
> Attaches to shelf with press-in dowels that fit Ø5 mm (3/16") drilled holes
> Dowels are on 32 mm (1 1/4") center increments
> Material:Steel

→ Fence

Length	chrome-plated	black	matt nickel powder-coated
278 (10 15/16")	547.51.201	547.51.301	547.51.601
432 (17")	547.51.202	547.51.302	547.51.602
584 (23")	547.51.203	547.51.303	547.51.603
736 (29")	547.51.204	547.51.304	547.51.604
889 (35")	547.51.206	547.51.306	547.51.606

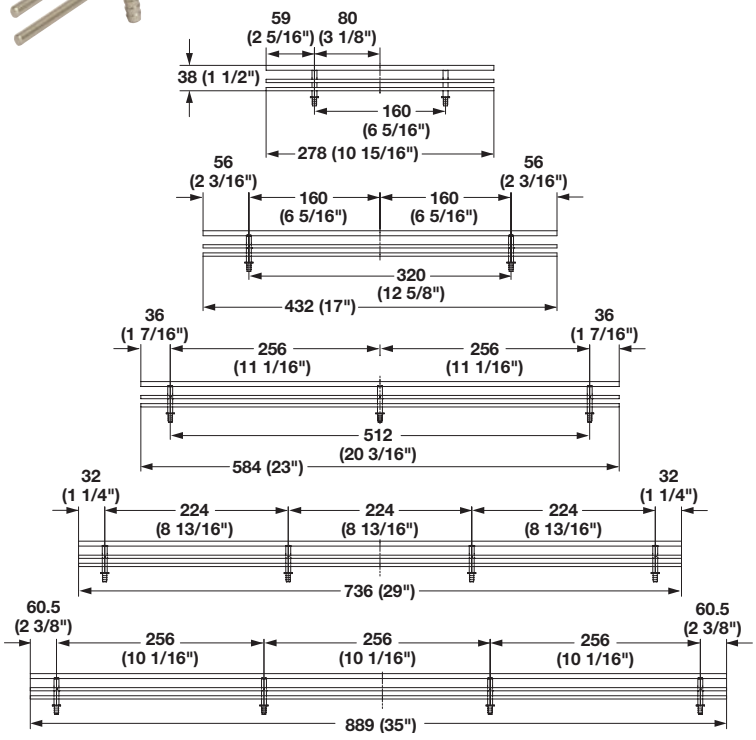

Dimensional data not binding. Dimensions in mm, inches are approximate. We reserve the right to alter specifications without notice.

Wardrobe Tubes

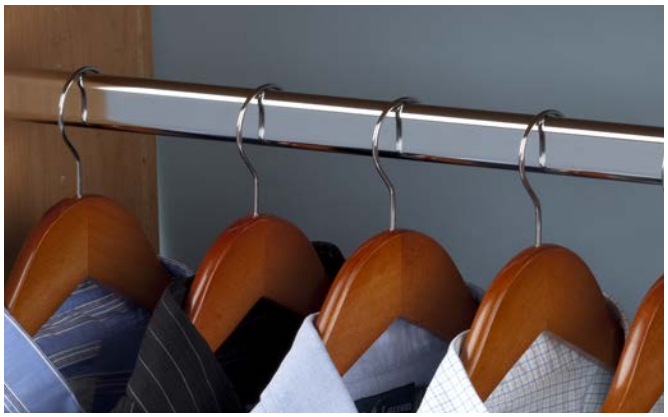

Welded tube

→ Oval Wardrobe Tube, welded

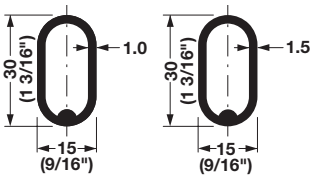

> Material: Steel

Material thickness	Finish	Length	Item No.
1.0	chrome-plated	2500 (98 7/16")	801.13.201
1.5	chrome-plated	2500 (98 7/16")	801.09.239
1.0	chrome-plated	2337 (92")	801.13.209
1.0	black	2337 (92")	801.13.309

Note
Supports ordered separately, see next page.

→ Oval Wardrobe Tube

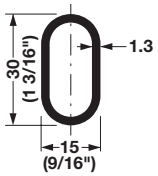

> Length: 2438 mm (96")
> Material thickness: 1.3 mm
> Material: Aluminum

Finish	Item No.
matt aluminum	801.13.391
matt nickel	801.13.691
black	801.13.381

Note
Supports ordered separately.

→ End Caps

> For oval tubes 801.13.201 and 801.13.209
> Caps are inserted by pushing into the end of the tube
> Material: Plastic

Finish	Item No.
chrome-plated	802.05.295

Supports page 4.130

Dimensional data not binding. Dimensions in mm, inches are approximate. We reserve the right to alter specifications without notice.

HÄFELE

Supports

→ Oval Center Bracket, surface mount

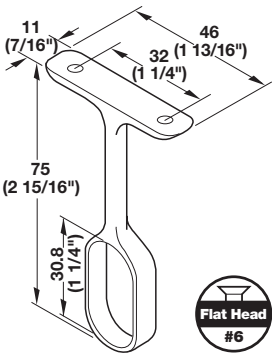

> For 15 x 30 mm (9/16" x 1 3/16") tube
> Material: Zinc die-cast

Finish	Item No.
chrome-plated	802.04.208
black	802.04.308

→ Oval Center Bracket, top mount

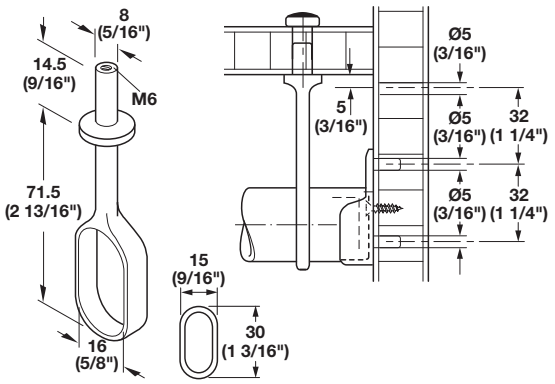

> For 15 x 30 mm (9/16" x 1 3/16") tube
> Material: Zinc die-cast

Finish	Item No.
chrome-plated	802.03.201

Supplied With
M6 x 12 mm screw

→ Wardrobe Tube Support

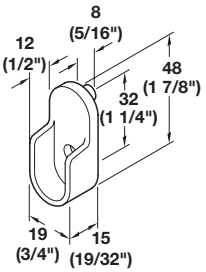

> For insertion in 32 mm system holes, with attached dowels and an additional screw hole
> Material: Zinc die-cast

Finish	Item No.
nickel-plated	803.33.722
chrome	803.33.210
matt aluminum	803.39.300
matt nickel	803.39.600
black	803.64.400

→ Center Bracket

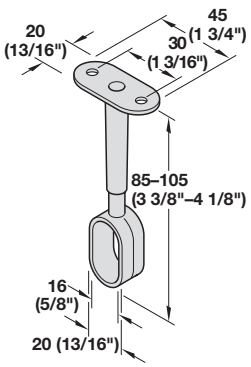

> For screw mounting under shelves, height adjustable 85–105 mm (3 3/8"–4 1/8")
> Material: Zinc

Finish	Item No.
chrome-plated	802.07.200

Flat head screws pages 12.7–12.8, 12.10, 12.13

Dimensional data not binding. Dimensions in mm, inches are approximate. We reserve the right to alter specifications without notice.

→ Wardrobe Tube Support

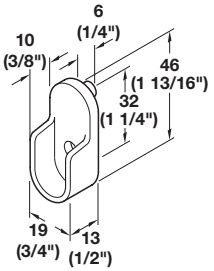

> For insertion in 32 mm system holes, with attached dowels and an additional screw hole
> Material: Zinc die-cast

Finish	Item No.
black	803.06.330

→ Wardrobe Tube Support

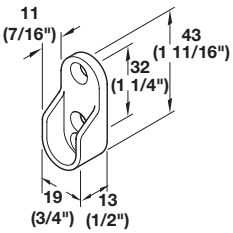

> Material: Zinc die-cast

Finish	Item No.
nickel-plated	803.33.757

→ Wardrobe Tube Support

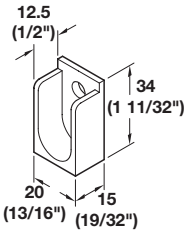

> Screw mounted on side panel
> Material: Plastic

Finish	Item No.
chrome-plated	803.25.220

Flat head screws pages 12.7–12.8, 12.10, 12.13

Dimensional data not binding. Dimensions in mm, inches are approximate. We reserve the right to alter specifications without notice.

This page is left blank intentionally.

Dimensional data not binding. Dimensions in mm, inches are approximate. We reserve the right to alter specifications without notice.

Tubes and Supports

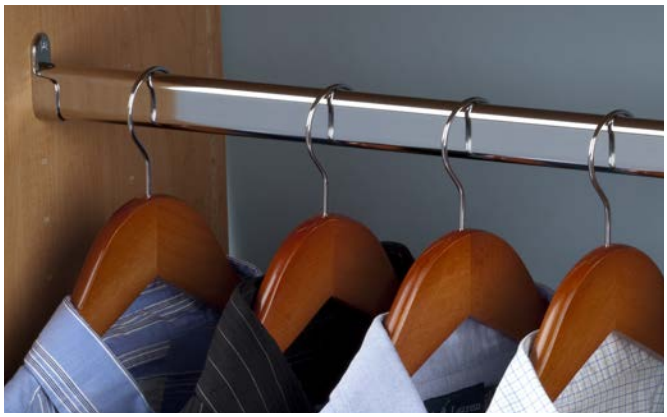

Service+

→ Oval Wardrobe Tube with Supports

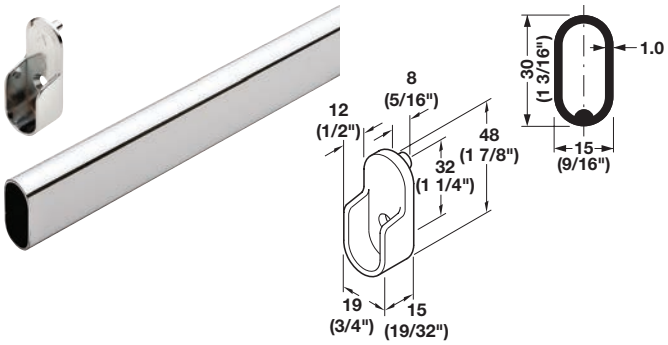

> Material: Steel; Finish: chrome-plated

Length	Item No.
451 (17 3/4")	801.13.245
603 (23 3/4")	801.13.246
756 (29 3/4")	801.13.247
908 (35 3/4")	801.13.248
1217 (47 15/16")	801.13.244

Supplied With
Tube
Supports

→ Oval Wardrobe Tube with Supports

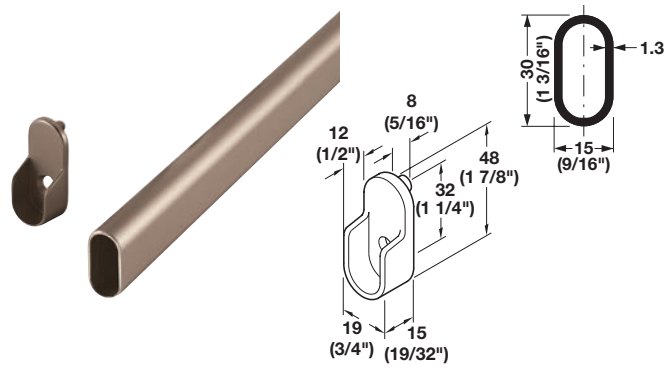

> Material: Aluminum

Length	matt aluminum	matt nickel	black
451 (17 3/4")	801.13.385	801.13.685	801.13.365
603 (23 3/4")	801.13.386	801.13.686	801.13.366
756 (29 3/4")	801.13.387	801.13.687	801.13.367
908 (35 3/4")	801.13.388	801.13.688	801.13.368
1217 (47 15/16")	801.13.384	801.13.684	801.13.369

Supplied With
Tube
Supports

Dimensional data not binding. Dimensions in mm, inches are approximate. We reserve the right to alter specifications without notice.

HÄFELE

Tubes and Supports

→ Wardrobe Tube

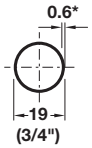

> Round, welded
> Add 0.5 mm for PVC coating*
> Ø: 19 mm (3/4")
> Length: 2500 mm (98 7/16")
> Material: Steel, electro-plated or Plastic, PVC

Finish	Item No.
chrome-plated	801.23.200
black PVC	801.23.300

Supplied With
10 pcs.

→ Wardrobe Tube Support

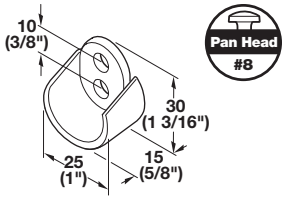

> For mounting on the side panel
> Material: Plastic

Color	Item No.
black	803.03.300

→ Wardrobe Tube Support

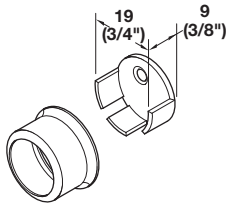

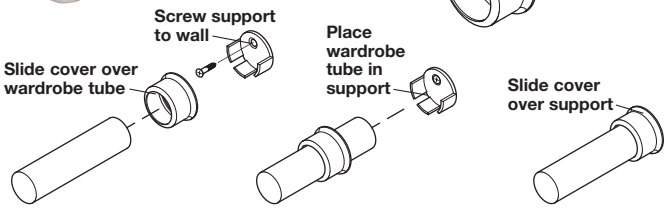

> Two-piece
> For mounting on the side panel
> Material: Steel, electro-plated

Finish	Item No.
chrome-plated	803.52.200

Pan head screws pages 12.9–12.10

Dimensional data not binding. Dimensions in mm, inches are approximate. We reserve the right to alter specifications without notice.

KV Wardrobe Tubes

→ 750 1 Series

> Round
> Heavy duty
> Commercial grade
> Wall thickness: 2 mm
> Ø: 27 mm (1 1/16")
> Material: Steel; Finish: chrome

Length	Item No.
8'	801.56.235
12'	801.56.239

Supplied With
6 pcs.

→ Supports

> For Ø27 mm (1 1/16") tubes
> Two screw holes on 51 mm (2") center to center
> Material: Zinc; Finish: chrome

Version	Mfg. No.	Item No.
Fully enclosed	KV 734	803.60.200
Half enclosed	KV 735	803.60.210

Supplied With
Mounting screws

→ 750 5 Series

> Round
> Heavy duty
> Commercial grade
> Wall thickness: 2 mm
> Ø: 33 mm (1 5/16")
> Material: Steel; Finish: chrome

Length	Item No.
8'	801.56.245
12'	801.56.249

Supplied With
6 pcs.

→ Supports

> For Ø33 mm (1 5/16") tubes
> Three screw holes spaced 28 mm (1 1/8") from center
> Material: Zinc; Finish: chrome

Version	Mfg. No.	Item No.
Fully enclosed	KV 764	803.60.202
Half enclosed	KV 766	803.60.212

Supplied With
Mounting screws

Flat head screws pages 12.7–12.8, 12.10, 12.13

Dimensional data not binding. Dimensions in mm, inches are approximate. We reserve the right to alter specifications without notice.

HÄFELE

Heavy Duty Wardrobe Tubes

→ Wardrobe Tube

> Round
> Thickness: 2 mm (1/16")
> Ø: 27 mm (1 1/16")
> Material: Steel; Finish: chrome

Length	Item No.
8'	801.54.261
12'	801.54.263

→ Supports

Flat Head #8

> For Ø27 mm (1 1/16") tubes
> Material: Zinc; Finish: chrome

Version	Item No.
Fully enclosed	803.06.257
Half enclosed	803.06.227

→ Wardrobe Tube

> Round
> Thickness: 2 mm (1/16")
> Ø: 33 mm (1 5/16")
> Material: Steel; Finish: chrome

Length	Item No.
8'	801.54.281
12'	801.54.283

→ Supports

Flat Head #8

> For Ø33 mm (1 5/16") tubes
> Material: Zinc; Finish: chrome

Version	Item No.
Fully enclosed	803.06.258
Half enclosed	803.06.228

→ Wardrobe Tube Center Support

Flat Head #8

> Screw mounted under a shelf
> Material: Zinc; Finish: chrome

For Wardrobe Tube	Item No.
Ø33 (1 5/16")	802.09.228

Flat head screws pages 12.7–12.8, 12.10, 12.13

Dimensional data not binding. Dimensions in mm, inches are approximate. We reserve the right to alter specifications without notice.

Heavy Duty Wardrobe Tubes

→ Wardrobe Tube

> Round
> Ø: 33 mm (1 5/16")
> Thickness: 2 mm (1/16")
> Length: 2337 mm (92")
> Material: Steel

Finish	Item No.
black	801.54.384

→ Tube Supports

Flat Head #8

> For Ø33 mm (1 5/16") tube
> Material: Zinc; Finish: black

Version	Item No.
Fully enclosed	803.06.358
Half enclosed	803.06.328

→ Center Support

Flat Head #8

> For screw mounting under a shelf
> Material: Zinc

Finish	Item No.
black	802.09.328

Flat head screws pages 12.7–12.8, 12.10, 12.13

Dimensional data not binding. Dimensions in mm, inches are approximate. We reserve the right to alter specifications without notice.

HEWI

> The wardrobe tube is non-returnable if cut
> Certain items are special ordered and are non-returnable

→ Wardrobe Tube

> Available in 4 stock lengths, cut-to-size on site
> Rosette Ø: 70 mm (2 3/4")
> Ø: 33 mm (1 5/16")
> Material: Polyamide, with steel core

Cutable range	Standard length	Item No.
140–500 (5 1/2"–19 11/16")	500 (19 11/16")	988.50.1..
501–1000 (19 3/4"–39 3/8")	1000 (39 3/8")	988.50.2..
1001–1500 (39 7/16"–59 1/16")	1500 (59 1/16")	988.50.3..
1501–2000 (59 1/8"–78 3/4")	2000 (78 3/4")	988.50.4..

Supplied With
Rosettes
Mounting hardware for wood

→ Clothes Hanger

> Theft-proof
> Slides onto wardrobe tubes up to Ø40 mm (1 9/16")
> Ø: 15 mm (5/8")
> Length: 450 mm (18")
> Material: Polyamide

	Item No.
	804.57.1..

→ Clothes Hanger

> Hangs onto wardrobe tubes up to Ø40 mm (1 9/16")
> Ø: 15 mm (5/8")
> Length: 450 mm (18")
> Material: Polyamide

	Item No.
	804.56.1..

→ Coat/Trouser Hanger

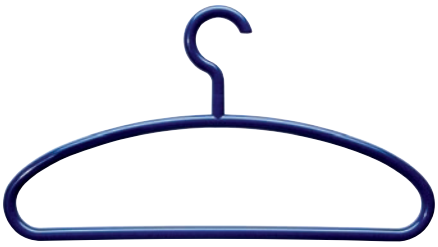

> With swivel feature
> Hangs onto wardrobe tubes up to Ø33 mm (1 5/16")
> Ø: 15 mm (5/8")
> Length: 440 mm (17 5/16")
> Material: Polyamide

	Item No.
	804.58.2..

Color specification: replace the decimals (. .) at the end of the stated item number with the color number of your choice.

18	24	33	36	50	55	72	74
mustard yellow	orange	ruby red	coral	steel blue	aqua blue	may green	apple green

84	86	90	92	95	97	98	99
umber	sand	jet black	anthracite gray	stone gray	light gray	signal white	pure white

Dimensional data not binding. Dimensions in mm, inches are approximate. We reserve the right to alter specifications without notice.

Brackets

> Heavy duty steel
> Horizontal member adjusts 19 mm (3/4") for optional 19 mm (3/4") cleat
> Material: Steel, plated or epoxy-coated

→ Wardrobe Bracket

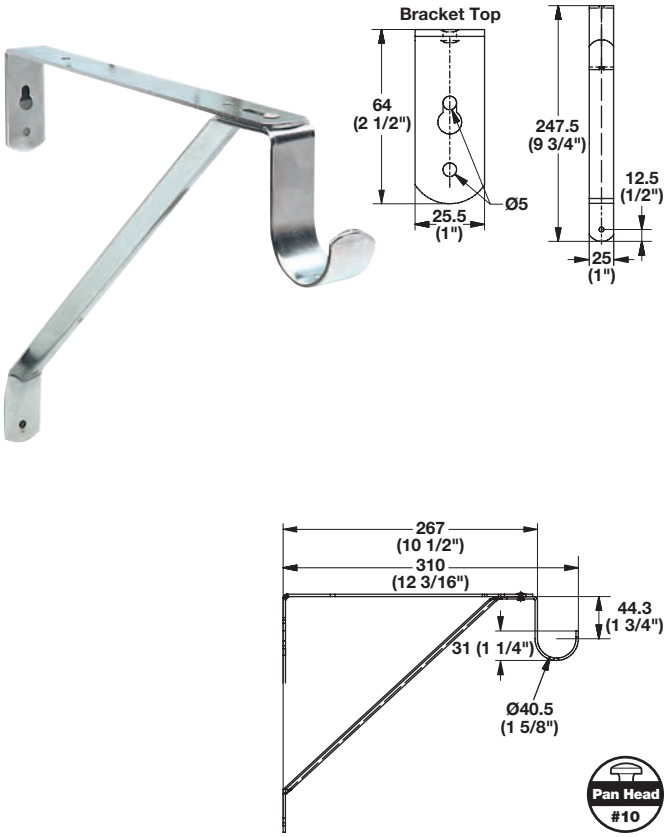

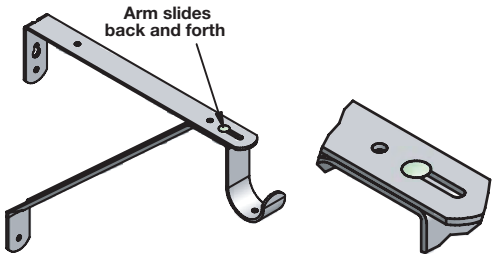

> For round tube Ø40 mm (1 9/16")

Finish	Item No.
chrome	805.39.202
white epoxy	805.39.702

→ Wardrobe Bracket

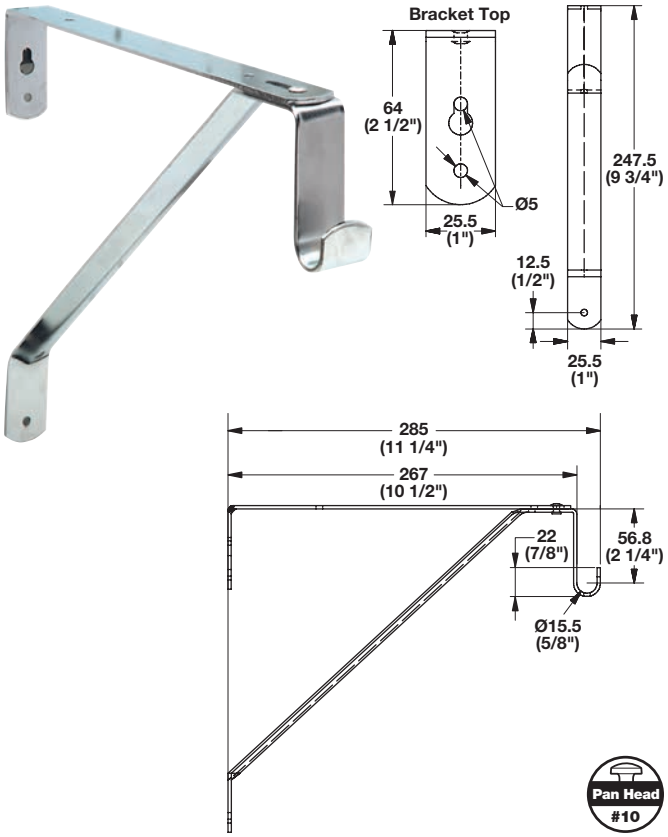

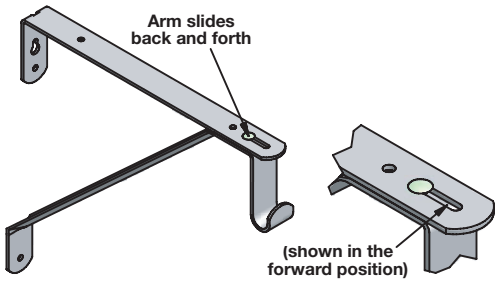

> For oval tube Ø15 mm (9/16")

Finish	Item No.
chrome	805.39.201
white epoxy	805.39.701

Pan head screws pages 12.9–12.10

Dimensional data not binding. Dimensions in mm, inches are approximate. We reserve the right to alter specifications without notice.

HÄFELE

Tie and Belt Racks

→ Belt Rack with Slide

> Single extension slide, extends 140 mm (5 1/2")
> 5 hooks
> L x D x H: 279 x 50 x 45 mm (11" x 2" x 1 3/4")
> Material: Steel

Finish	Item No.
chrome-plated	807.53.250

Supplied With
2 pcs.
Mounting screws

→ Tie Rack with Slide

> Single extension slide, extends 146 mm (5 3/4")
> 12 hooks
> L x D x H: 279 x 50 x 55 mm (11" x 2" x 2 3/16")
> Material: Steel

Finish	Item No.
chrome-plated	807.53.260

Supplied With
2 pcs.
Mounting screws

Dimensional data not binding. Dimensions in mm, inches are approximate. We reserve the right to alter specifications without notice.

Rails and Valet

→ Wardrobe Rail

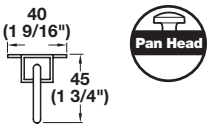

> Mounts under the cabinet top
> Retractable
> Weight capacity: 10 kg (22 lbs.)
> Material: Track: Steel, epoxy-coated; Color: almond
Rail: Steel; Finish: nickel-plated

Length	Item No.
290 (11 5/8")	805.12.303
340 (13 1/2")	805.12.358
390 (15 1/2")	805.12.401
440 (17 1/2")	805.12.456

Supplied With
Mounting hardware

→ Wardrobe Rail

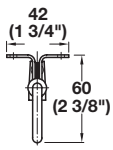

> With plastic runner
> Mounts under the cabinet top
> Retractable
> Material: Steel; Finish: nickel-plated

Length	Weight capacity	Item No.
260 (10 1/4")	8 kg (17 1/2 lbs.)	805.01.752
310 (12 1/4")	6 kg (13 lbs.)	805.01.761

→ Laundry Valet

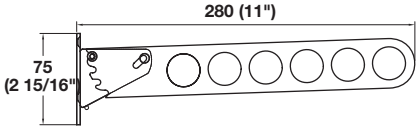

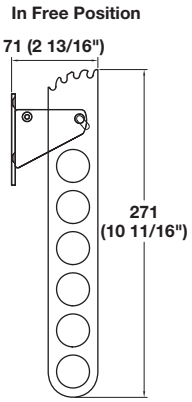

> For hanging clothing on clothes hangers
> Four angled positions for the arm
> Weight capacity: 10 kg (22 lbs.)
> L x H: 280 x 271 mm (11" x 10 11/16")
> Material: Steel

Finish	Item No.
polished chrome	805.43.250

Supplied With
Mounting screws

Dimensional data not binding. Dimensions in mm, inches are approximate. We reserve the right to alter specifications without notice.

HÄFELE

Wardrode Rails

→ Swing Wardrobe Rail

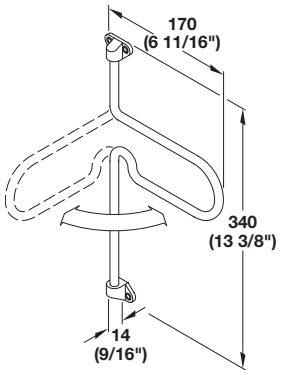

> Pivotable, screw mounted
> 180° pivoting range
> Material: Steel; Mounts: Zinc die-cast

Finish	Item No.
chrome-plated	805.40.209

Supplied With
Mounting screws

Dimensional data not binding. Dimensions in mm, inches are approximate. We reserve the right to alter specifications without notice.

Shoe Racks

→ Shoe Rack

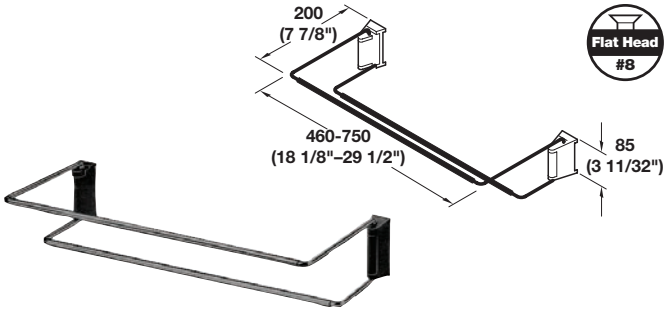

> Attaches to wall with screws
> Extension: 460–750 mm (18 1/8"–29 1/2")
> Material: Steel; Mounting parts: Plastic

Finish	Item No.
chrome-plated/silver	892.12.906

→ Wall Track

> For shoe rack
> Height adjustable
> Length with end caps: 1120 mm (44")
> Material: Rail: Aluminum, oxidized; End caps: Plastic

Finish	Item No.
silver	892.12.990

Supplied With
2 Tracks

Flat head screws pages 12.7–12.8, 12.10, 12.13

Dimensional data not binding. Dimensions in mm, inches are approximate. We reserve the right to alter specifications without notice.

Drawer Trays and Liners

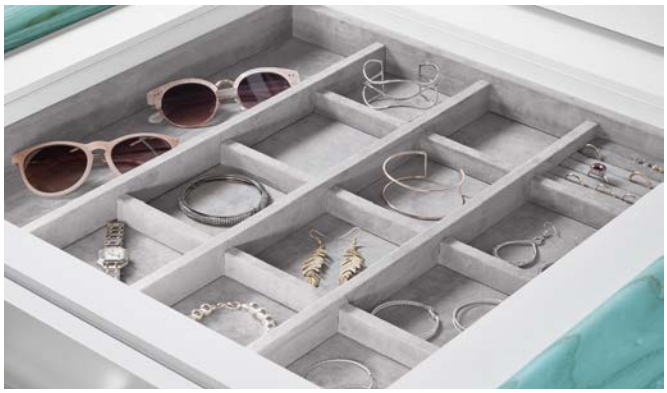

> Optional drawer fronts and slides can be mounted directly to the trays
> Lined with brushed nylon or faux suede for a plush feel

→ Jewelry Tray

> Features one large compartment and nine small compartments, one specially designed for rings
> W x D x H: 582 x 356 x 50 mm (22 15/16" x 14" x 2")

Material	Color	Item No.
Nylon, Felt	black	811.03.301
Faux Suede		811.03.320
Velvet		811.03.380
Nylon, Felt	gray	811.03.504
Faux Suede		811.03.520
Nylon, Felt	maroon	811.03.110
Nylon, Felt	royal blue	811.03.800
Nylon, Felt	teal green	811.03.000
Velvet	silver	811.03.980
Faux Suede	plum	811.03.120

→ Belt Tray

> Features one long compartment and four smaller compartments
> 102 mm (4") depth makes it ideal for storing belts, scarves, underwear, socks, watches and other accessories
> W x D x H: 582 x 356 x 50 mm (22 15/16" x 14" x 2")

Material	Color	Item No.
Nylon, Felt	gray	811.03.513
Faux Suede		811.03.530

Dimensional data not binding. Dimensions in mm, inches are approximate. We reserve the right to alter specifications without notice.

Shelf Dividers and Liners

→ Acrylic Shelf Dividers

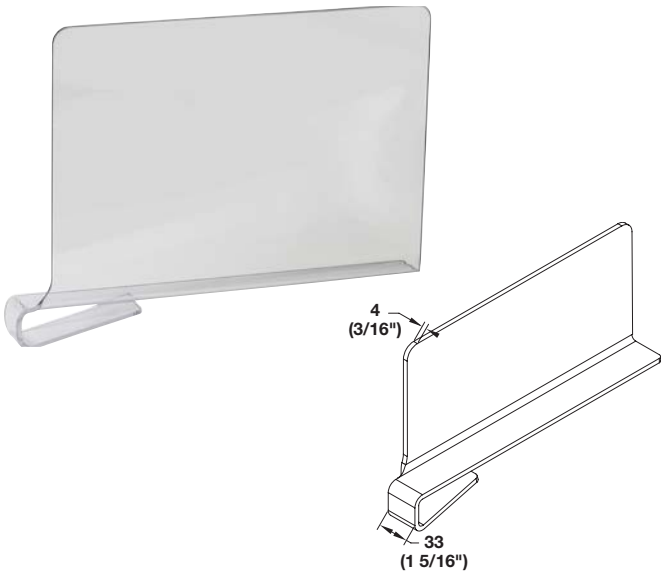

> For 19 mm (3/4") shelves
> Keeps clothes, purses, towels, etc. organized
> Clear for excellent visibility
> Durable, one piece construction
> Installs quickly and easily by sliding over shelf
> Material: Acrylic, clear

Depth	Height	Item No.
305 (12")	127 (5")	771.80.430
356 (14")	127 (5")	771.80.431
305 (12")	203 (8")	771.80.435
356 (14")	203 (8")	771.80.436

→ Felt Cloth

> Self-adhesive
> For lining drawers in wardrobes and closets
> W x D: 584 x 914 mm (23" x 36")
> Material: Nylon, Felt

Color	Item No.
teal green	811.05.000
maroon	811.05.110
gray	811.05.500
royal blue	811.05.800

→ Flock Non-Slip Mat - Agoform

> Luxurious, velvety finish
> Noise-dampening and vibration resistant
> Cut-to-size non-slip mats prevent sliding or movement of items on shelves, drawers, etc.
> W x L: 590 x 1170 mm (23 1/4" x 46 1/16")
> Material: Face: Flock; Back: Polystyrene

Color	Item No.
anthracite gray	547.94.385
black	547.94.485

Note
Sold in sheets.

Dimensional data not binding. Dimensions in mm, inches are approximate. We reserve the right to alter specifications without notice.

Häfele Ironfix®

> Rotates 180° degrees with seven pre-set positions
> Clothing remains free from grease or pinch-point damage due to the absence of ball bearing slides
> Mounts to a shelf with through bolts (included)
> Fits into a 610 x 356 mm (24" x 14") wide x deep space

Note
See Iron Holder on page **4.148**.

→ Shelf-Mounted Ironing Board

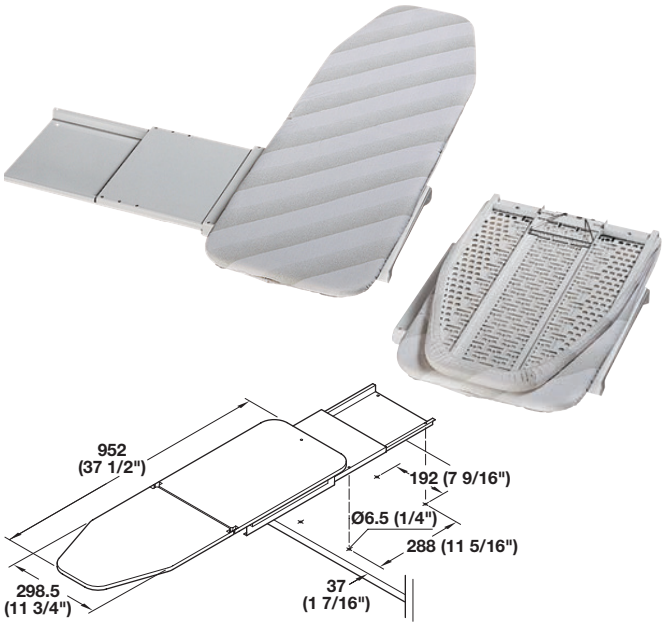

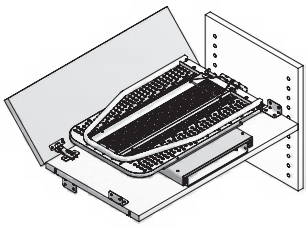

> W x D x H: 520 x 350 x 130 mm (20 1/2" x 13 3/4" x 5 1/8")
> Extended board length: 952 mm (37 1/2")
> Material: Steel, epoxy-coated; Cover: Natural White Cotton with gray stripes, foam-backed

Finish	Item No.
white RAL 9016	568.60.781
slate RAL 7022	568.60.581

Supplied With
Installation hardware

→ Replacement Heat-Resistant Cover

> For ironing board with elastic band
> Material: Natural Cotton, foam-backed

Color	Item No.
white/gray striped	568.60.907

Dimensional data not binding. Dimensions in mm, inches are approximate. We reserve the right to alter specifications without notice.

Häfele Ironfix®

- > Space-saving, cabinet drawer installation
- > Integrated spring mechanism
- > Drawer front folds down to allow for trousers, shirts, etc.
- > Support extends automatically as ironing board is pulled out
- > Continuous width adjustment for inside clear widths: 362–500 mm (14 1/4"–19 11/16")
- > Inside clear depth: 500 mm (19 11/16")

Note
See Iron Holder on page **4.148**.

→ Built-In Ironing Board

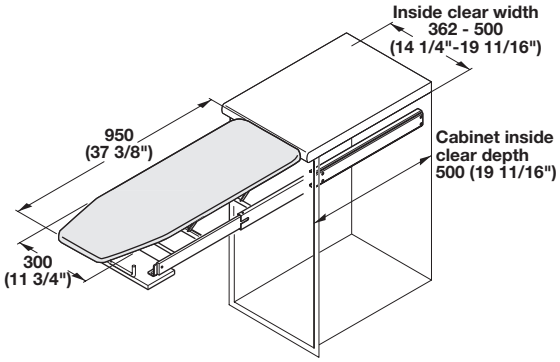

Use the below dimensions to match ironing surface to countertop height. The maximum countertop overhang is 55 mm (2 3/16").

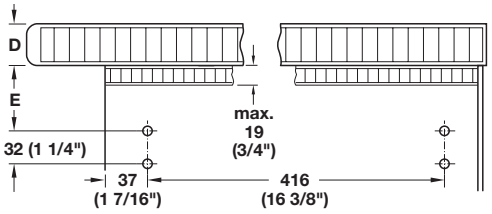

D	20 mm (7/8")	30 mm (1 1/8")	40 mm (1 1/2")	50 mm (2")
E	86 mm (3 3/8")	76 mm (3")	66 mm (2 1/2")	66 mm (2 1/2")

- > Material: Steel, epoxy-coated; Surface: heat-resistant striped fabric-covered

Finish	Item No.
white RAL 9016	568.60.710

Supplied With
Installation hardware
Runners

→ Replacement Heat-Resistant Cover

- > For ironing board with elastic band
- > Material: Natural Cotton, foam-backed

Color	Item No.
white/gray striped	568.60.907

→ Sleeve Board, optional

- > Retrofits easily to Ironfix™ built-in ironing board

Color	Item No.
white RAL 9016	568.61.700

→ Replacement Heat-Resistant Cover for Sleeve Board

- > With elastic band
- > Material: Natural Cotton, foam-backed

Color	Item No.
white/gray striped	568.60.916

Dimensional data not binding. Dimensions in mm, inches are approximate. We reserve the right to alter specifications without notice.

Häfele Ironfix®

> Turning mechanism; swivel range 180°
> Locks in left, right, or inclined position

Note
See Iron Holder on page **4.148**.

→ Wall-Mounted Ironing Board

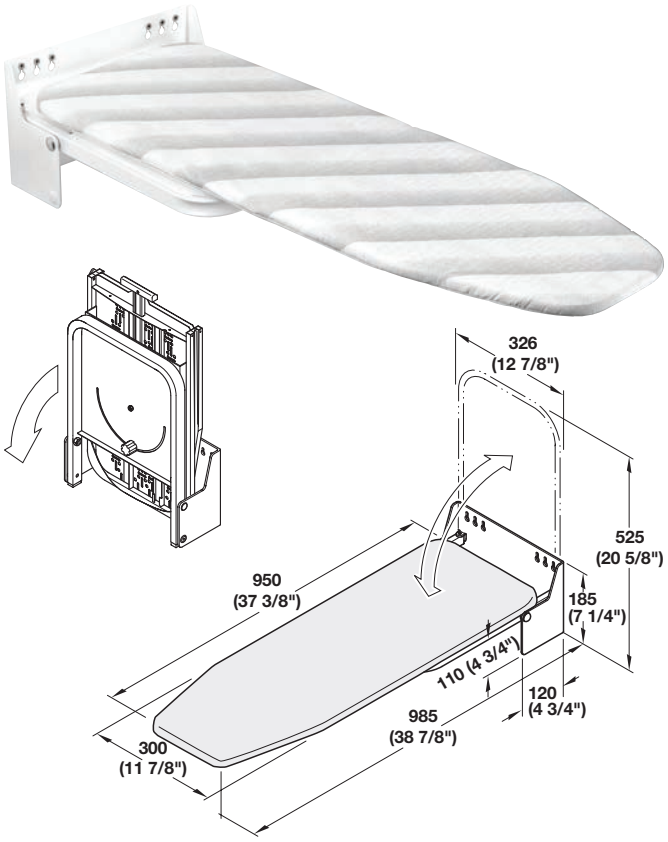

> Material: Steel, epoxy-coated; Cover: Natural White Cotton with gray stripes, foam-backed

Finish	Item No.
white RAL 9016	568.66.700

Supplied With
Installation hardware

→ Wall Cover, optional

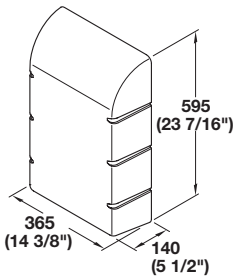

> Material: Polystyrene

Finish	Item No.
white RAL 9016	568.66.790

→ Replacement Heat-Resistant Cover

> For ironing board
> With elastic band
> Material: Natural Cotton, foam-backed

Color	Item No.
white/gray striped	568.60.907

Dimensional data not binding. Dimensions in mm, inches are approximate. We reserve the right to alter specifications without notice.

Ironing Board

→ Rotating Vertical Mount Ironing Board

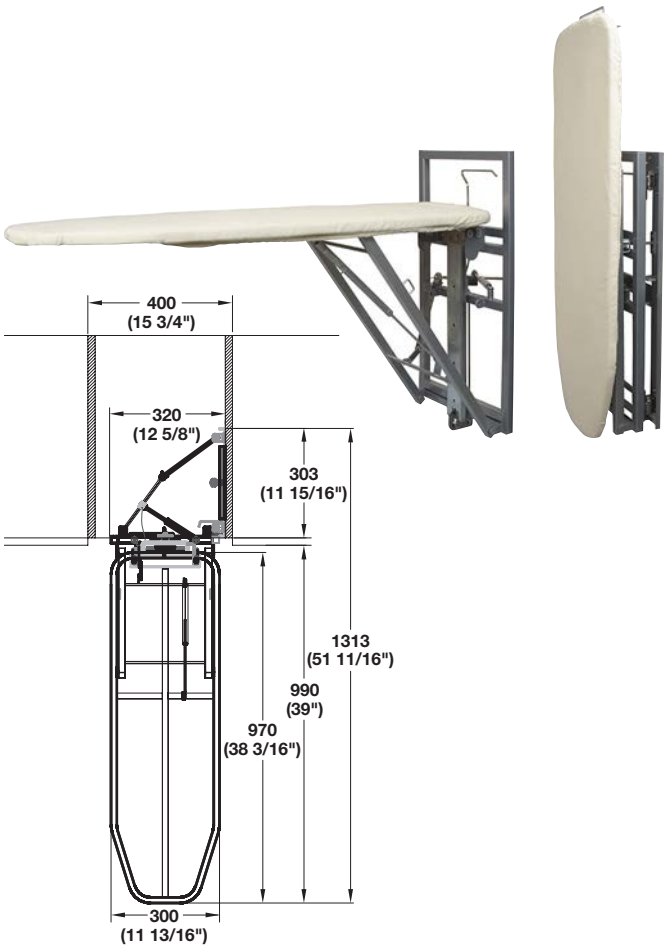

> Easy opening and release
> Strong and sturdy
> Ideal for closets, laundry rooms and more
> Minimum inside depth: 310 mm (12 3/16")
> Minimum inside width: 340 mm (13 3/8")
> Material: Steel

Item No.
568.67.900

Supplied With
Installation hardware and cover

Note
See Iron Holder on page **4.148**.

→ Replacement Cover

> Heat resistant
> Material: Cotton

Item No.
568.67.990

Dimensional data not binding. Dimensions in mm, inches are approximate. We reserve the right to alter specifications without notice.

> Stores iron and cord
> Mounts quickly and easily
> Great accompaniment for Ironfix® ironing boards
> Material: Steel

→ Iron Holder

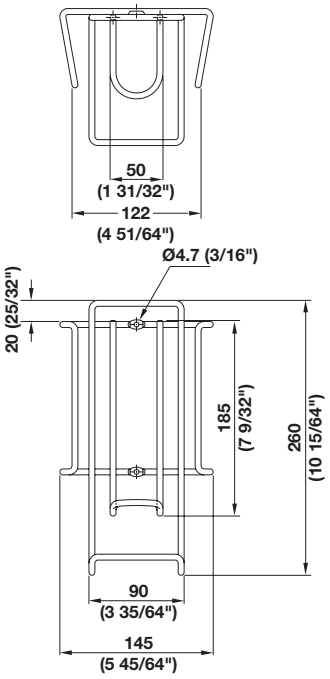

Finish	Item No.
polished chrome	520.20.280

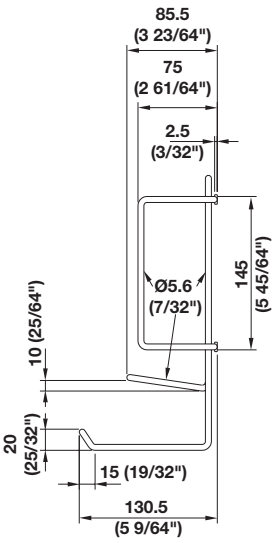

Dimensional data not binding. Dimensions in mm, inches are approximate. We reserve the right to alter specifications without notice.

Lifts

> For attachment to closet sides with screws
> Bumpers add protection to the housing when lowering the clothes bar
> Spacers provide optimal distance between the back wall and hangers
> Height: 839 mm (33 1/16")
> Wardrobe tubes Ø: 22 mm (7/8"), with adjustment feature for different closet widths
> Material: Arms and Pole: Steel; Housing: Plastic

→ Wardrobe Lift

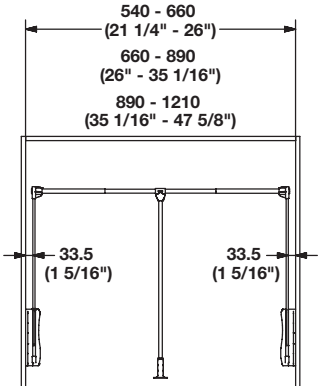

> Weight capacity: 12 kg (26 lbs.)

For inside closet widths	chrome-plated/black	black powder-coated/black	white
540–660 (21 1/4"–26")	805.31.201	805.31.301	805.31.701
660–890 (26"–35 1/16")	805.31.202	805.31.302	805.31.702
890–1210 (35 1/16"–47 5/8")	805.31.203	805.31.303	805.31.703

Supplied With
Mounting hardware

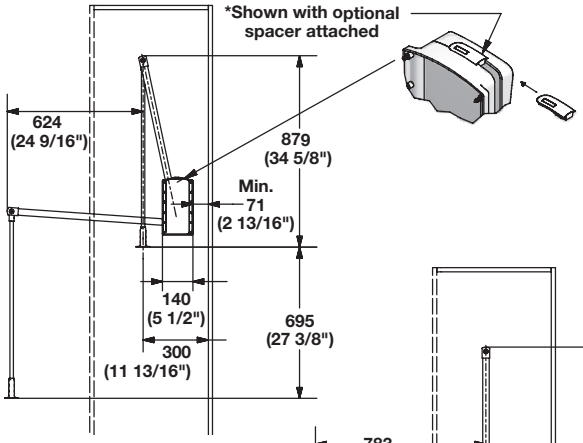

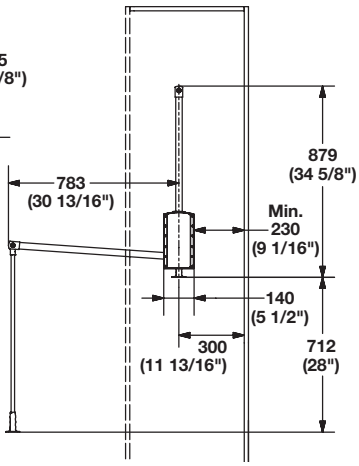

> For inside closet widths: 890–1210mm (35 1/16"–47 5/8")
> Weight capacity: 15 kg (33 lbs.)

Finish	Item No.
chrome-plated/black	805.31.223
black powder-coated/black	805.31.323
white powder-coated/white	805.31.723

Supplied With
Mounting hardware

→ Pole, optional

> For optional pole length of the 805.31.xxx wardrobe lifts
> Poles can replace the handle pole
> Two screw holes provided; one at each end for attachment to the clothes bar connector and the handle
> Pole can be cut to size but hole must be redrilled for either the clothes bar connector or the handle
> Ø: 16 mm (5/8")
> Material: Steel; Finish: chrome-plated

Length	chrome-plated	white powder-coated
1800 (70 7/8")	805.31.295	805.31.795
1524 (60")	805.31.296	805.31.796
1219 (48")	805.31.297	805.31.797

Dimensional data not binding. Dimensions in mm, inches are approximate. We reserve the right to alter specifications without notice.

Motorized Lift

→ Motorized Wardrobe Lift

- > Store items with the ease of motorization
- > For use when greater weight capacity is required
- > Store clothing in higher spaces when there is limitation in reach and/or strength
- > Accessible without the use of a ladder
- > Motorized 110v electrical plug included but can be hardwired by electrician
- > Each unit draws 2 amps
- > Wireless remote programs upward and lower range of motion
- > Material: Arms and Crossbars: Steel
  Housing: Plastic

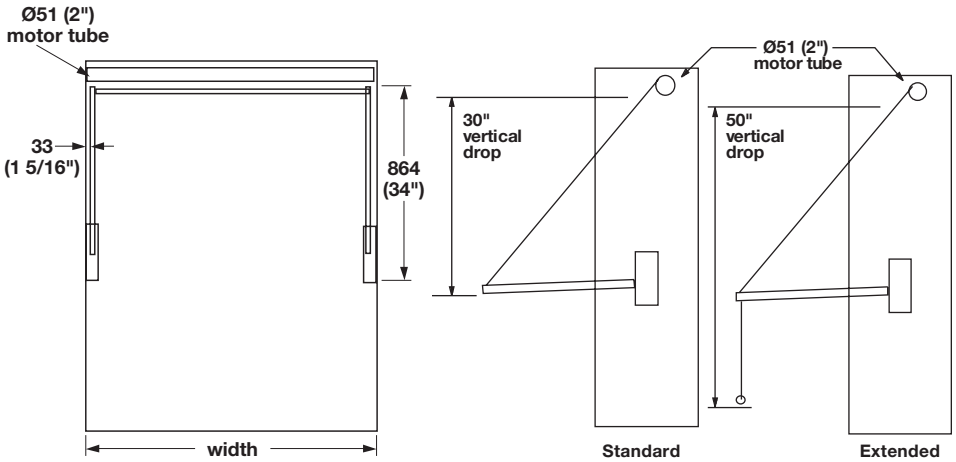

Recommended motor tube placement is one to two inches from the top of the cabinet.

Lift	Width	Weight capacity	Vertical lowering range of clothes rail	Tube	Arm	Housing	Item No.
Standard	635–686 (25"–27")	60 lbs.	762 (30")	chrome	chrome	black	805.32.251
				chrome	black	black	805.32.351
				chrome	chrome	white	805.32.661
	686–838 (27"–33")	60 lbs.	762 (30")	chrome	chrome	black	805.32.246
				chrome	black	black	805.32.358
				chrome	chrome	white	805.32.766
	864–1219 (34"–48")	60 lbs.	762 (30")	chrome	chrome	black	805.32.254
				chrome	black	black	805.32.354
				chrome	chrome	white	805.32.764
Extended	635–737 (25"–29")	45 lbs.	1270 (50")	chrome	chrome	black	805.32.261
				chrome	black	black	805.32.461
				chrome	chrome	white	805.32.761
	737–1219 (29"–48")	70 lbs.	1270 (50")	chrome	chrome	black	805.32.262
				chrome	black	black	805.32.362
				chrome	chrome	white	805.32.763

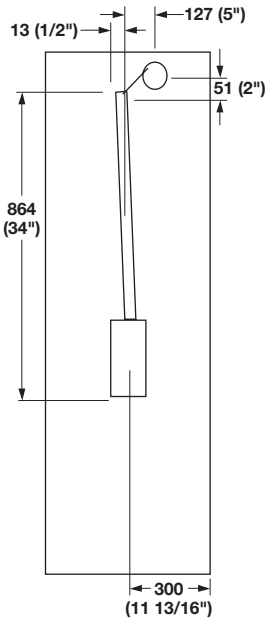

Supplied With
Instructions to size the unit to desired width

Dimensional data not binding. Dimensions in mm, inches are approximate. We reserve the right to alter specifications without notice.

Strips, Rail and Cabinet Hangers

→ Wall Rail

> Rail used to hang cabinets or closets
> First and last screw holes are 2337 mm (92") on 290.11.907 and 2438 mm (96") on 290.11.901 with 12 mm (1/2") of rail on each end
> Hole center to center equals 25 mm (1")
> There is an "A" marked on the rail in intervals of 100 mm (4") to help locate studs in the wall; Four A's equal 400 mm (16")
> Length: 2463 mm (97")
> Material: Steel, galvanized

Length	Item No.
2362 (93")	290.11.907
2463 (97")	290.11.901

Supplied With
25 pcs.

→ Covering Strip

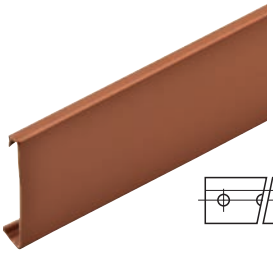

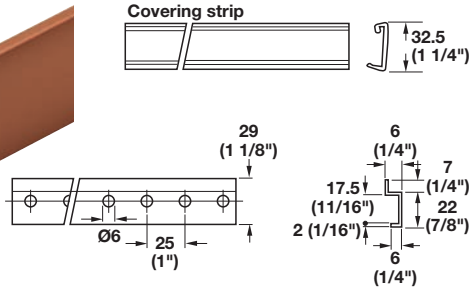

> Gives clean appearance to exposed rail
> Material: Plastic

Color	Length	
	2362 (93")	2463 (97")
white	290.12.790	290.12.781
beige/almond	290.12.490	290.12.481
brown	290.12.190	290.12.180
black	290.12.390	290.12.380
gray	290.12.590	290.12.581

Supplied With
25 pcs.

Note
We recommend attaching the wall rail to studs with Pan Head screws. Do not attach only to sheetrock/drywall. For additional attachment to sheetrock/drywall, use drywall wall anchors.

→ Cabinet Hanger

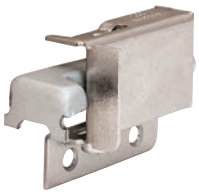

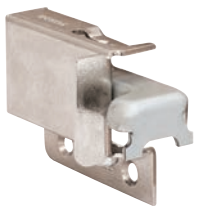

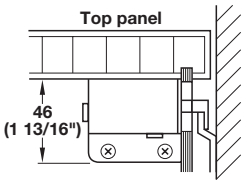

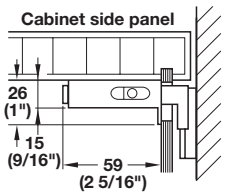

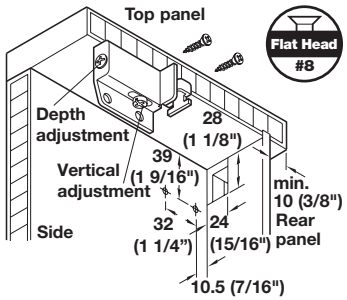

> Screw mounted
> Wall rail suspension
> Works with wall rail 290.11.901, above
> Weight capacity per pair: 200 kg (440 lbs.)
> Adjustments: Vertical: 16 mm (5/8"); Depth: 15 mm (9/16")

> Material: Steel; Finish: nickel-plated

Handing	Item No.
Left	290.02.721
Right	290.02.720

> Material: Steel, epoxy-coated; Finish: white

Handing	Item No.
Left	290.07.721
Right	290.07.720

Flat head screws	pages 12.7–12.8, 12.10, 12.13
Pan head screws	pages 12.9–12.10

Dimensional data not binding. Dimensions in mm, inches are approximate. We reserve the right to alter specifications without notice.

HÄFELE

Cabinet Hangers and Caps

→ Cabinet Hanger

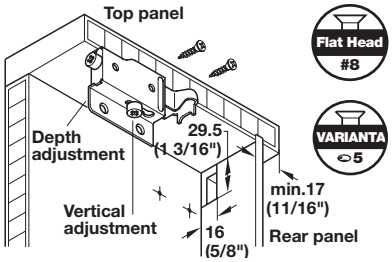

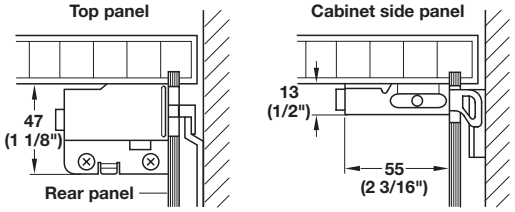

> Screw mounted
> For wall rail suspension
> Weight capacity per pair: 130 kg (286 lbs.)
> Adjustments: Vertical: 16 mm (5/8"); Depth: 14 mm (9/16")
> Material: Steel; galvanized

Handing	Item No.
Left	290.02.715
Right	290.02.714

Note For use with wall rails 290.11.901 and 290.11.907, see page **4.151**. For use with Euro Screw 013.02.904.

→ Cover Cap, optional

> Clip on
> For hanger 290.02.714/715 and 290.02.730/731
> Material: Plastic

Color	Left	Right
white	290.06.020	290.06.040
gray	290.06.028	290.06.048
taupe gray	290.06.032	290.06.052
stone gray	290.06.034	290.06.054
brown	290.06.025	290.06.045
black	290.06.022	290.06.042
cream white/almond	290.06.030	290.06.050
maple	290.06.033	290.06.053
candlelight	290.06.023	290.06.043

→ Euro Screw

Pan Head

> With #2 Pozi Drive
> For 5 mm system holes
> Length x Ø: 15 x 6.3 mm (9/16" x 1/4")
> Material: Steel

Finish	Item No.
zinc-plated	013.02.904

→ Screw-Mounted Cabinet hanger

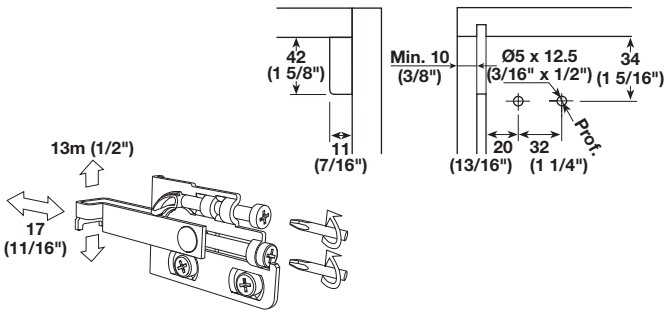

> Screw mounted
> For wall rail suspension
> Weight capacity per pair: 130 kg (286lbs.)
> Adjustments: Vertical: 13 mm (1/2"); Depth: 17 mm (11/16")
> Material: Steel; Finish: Zinc-plated

Handing	Item No.
Left	290.21.921
Right	290.21.920

Supplied With
Ø5 x 16 mm Euro screws

Note
For use with wall rail 290.11.901, see page **4.151**.

→ Cover Cap, optional

> Clip on
> For hanger 290.21.921/920
> Material: Plastic

Color	Left	Right
white	290.06.120	290.06.140
gray	290.06.128	290.06.148
taupe gray	290.06.132	290.06.152
stone gray	290.06.134	290.06.154
brown	290.06.125	290.06.145
black	290.06.122	290.06.142
cream white/almond	290.06.130	290.06.150
maple	290.06.133	290.06.153
candlelight	290.06.123	290.06.143

Flat head screws	pages 12.7–12.8, 12.10, 12.13
Varianta screws	pages 12.16

Dimensional data not binding. Dimensions in mm, inches are approximate. We reserve the right to alter specifications without notice.

Cabinet Hangers

→ Cabinet Hanger

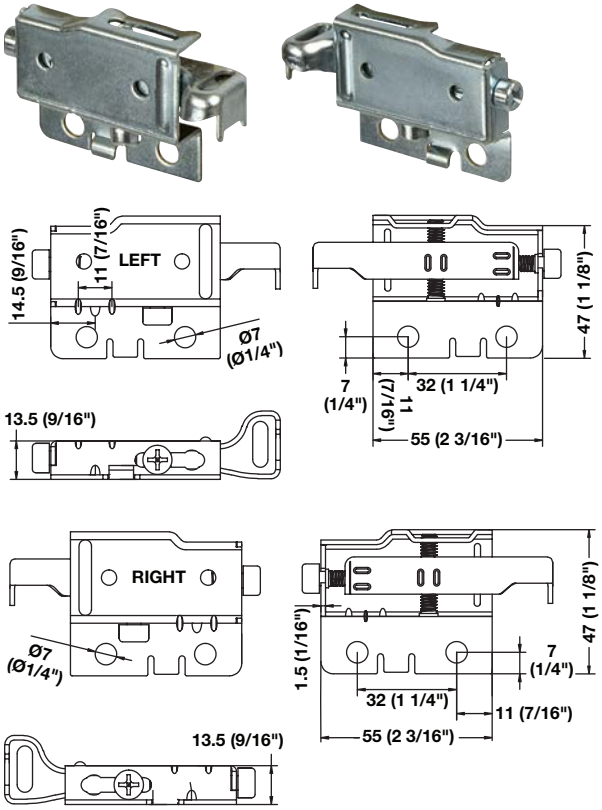

- > Screw mounted
- > For wall rail suspension
- > Weight capacity per pair: 130 kg (289 lbs.)
- > Adjustments: Vertical: 16 mm (5/8"); Depth: 14 mm (9/16")
- > Includes three gussets for added strength
- > Material: Steel, galvanized

Handing	Item No.
Left	290.02.731
Right	290.02.730

Note
For use with wall rails 290.11.901 and 290.11.907, see page **4.151**.
For use with Euro Screw 013.02.904.
Cover caps are on page **4.152**.

Dimensional data not binding. Dimensions in mm, inches are approximate. We reserve the right to alter specifications without notice.

This page is left blank intentionally.

Dimensional data not binding. Dimensions in mm, inches are approximate. We reserve the right to alter specifications without notice.

Heavy Duty Cabinet Hangers

> The cabinet hangers are concealed within the cabinet and are not visible when installed creating a floating appearance
> Cabinet hangers take up minimal space inside the cabinet and will not interfere with drawers
> Wall plate includes a safety feature to lock the cabinet hangers in place
> Weight capacity per pair: 240 kg (528 lbs.)
> Adjustments: Height: 22 mm (7/8"); Depth: 19 mm (3/4")

→ Concealed Cabinet Hanger

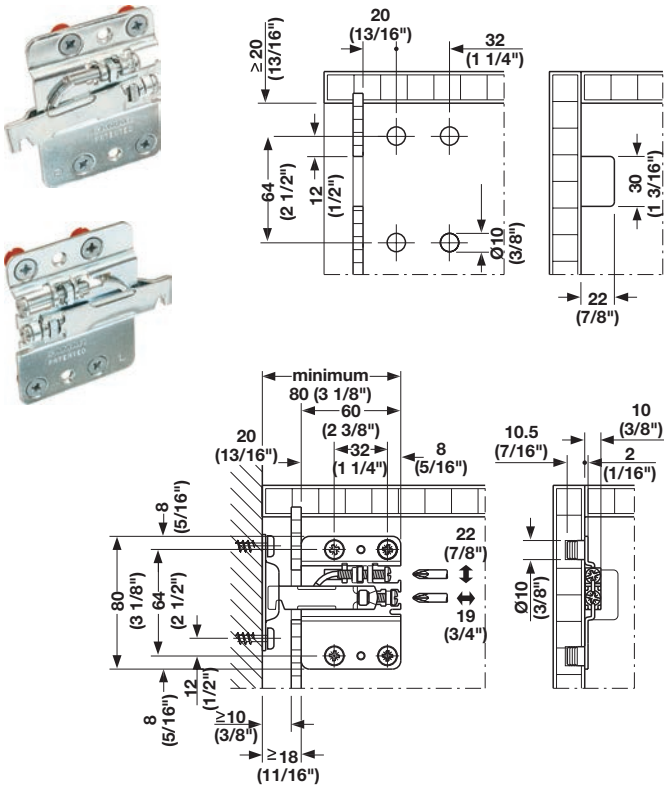

> Dowel mounted
> Material: Steel, galvanized

Handing	Item No.
Left	290.40.902
Right	290.40.901

→ Cover Cap, optional

> Material: Plastic; Color: white

Handing	Left
Left	290.40.702
Right	290.40.701

→ Wall Plate

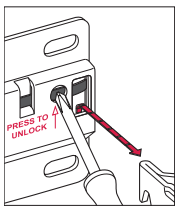

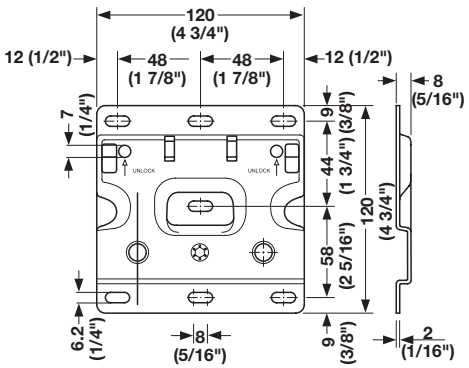

> Material: Steel, galvanized

	Right
	290.40.991

Dimensional data not binding. Dimensions in mm, inches are approximate. We reserve the right to alter specifications without notice.

HÄFELE

Heavy Duty Cabinet Hangers

> For base cabinets
> The cabinet hangers are concealed within the cabinet and are not visible when installed creating a floating appearance
> Cabinet hangers take up minimal space inside the cabinet and will not interfere with drawers
> Wall plate includes a safety feature to lock the cabinet hangers in place
> Weight capacity per pair: 369 kg (811 lbs.)
> Adjustments: Height: +/- 6 mm (1/4"); Depth: +/- 5.5 mm (3/16")
> Material: Steel; Finish: zinc-plated

→ Back Support

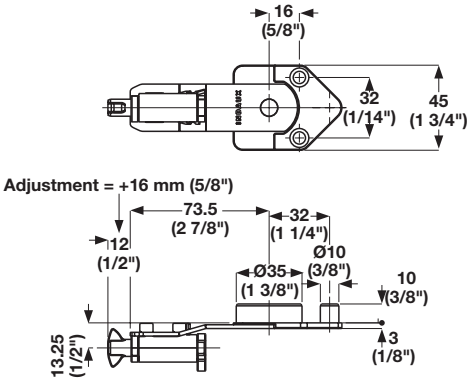

	Item No.
	290.24.910

→ Wall Plate

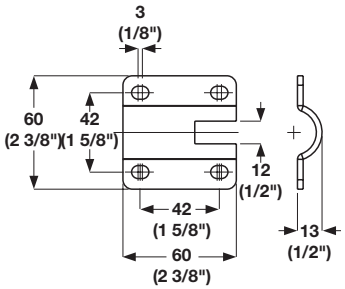

	Item No.
	290.24.919

→ Lower Support

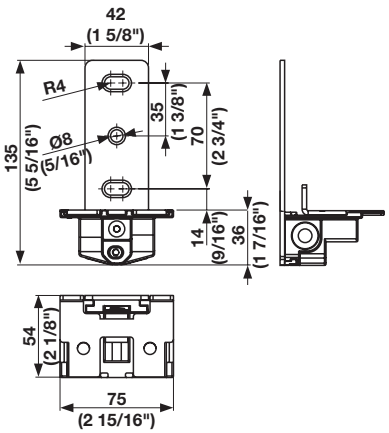

	Item No.
	290.24.920

Note
Lower support is surface mounted and requires no machining.
A third lower support is recommended to be mounted in the center of cabinets that are wider than 900 mm (35 7/16").

Dimensional data not binding. Dimensions in mm, inches are approximate. We reserve the right to alter specifications without notice.

Heavy Duty Cabinet Hangers

290.24.910

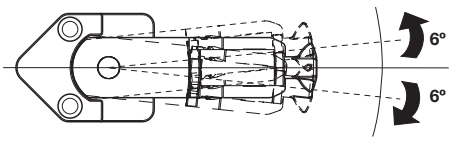

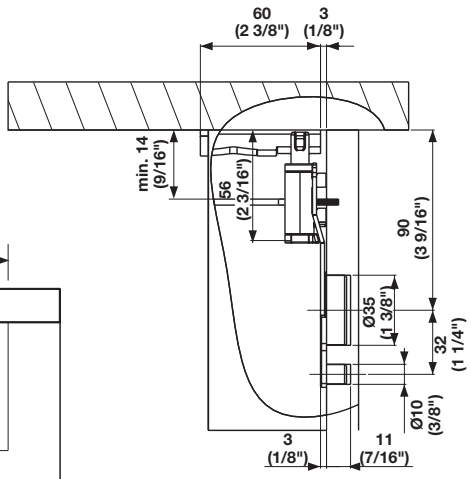

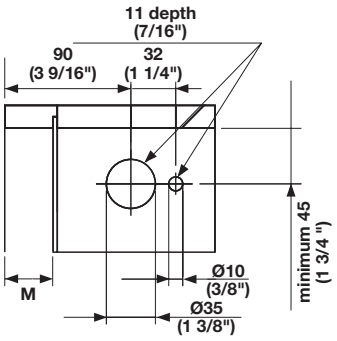

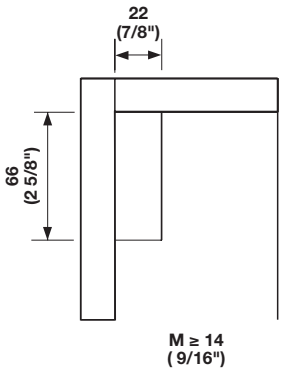

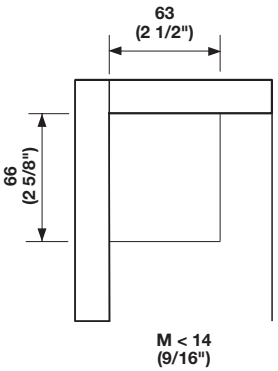

290.24.920

1. Install lower support

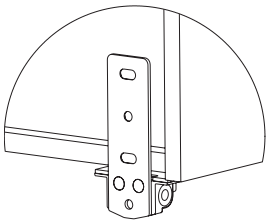

2. Loosely tighten screws

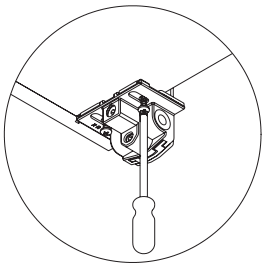

3. Adjust depth +/- 5.5 mm (3/16")

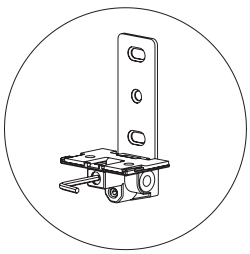

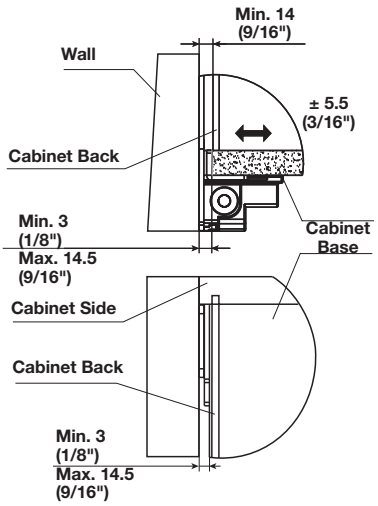

4. Fully tighten screws

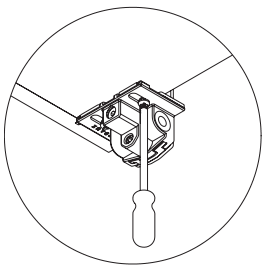

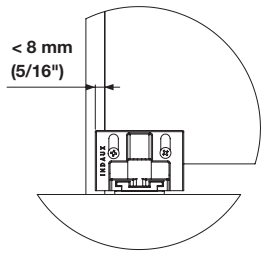

5. Adjust height +/- 6 mm (1/4")

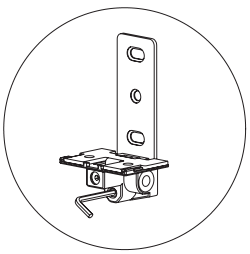

Dimensional data not binding. Dimensions in mm, inches are approximate. We reserve the right to alter specifications without notice.

HÄFELE

Brackets and H-Channel

→ Angle Bracket

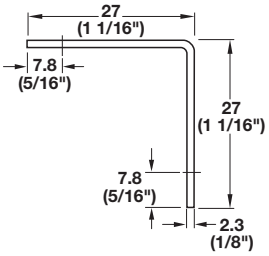

Flat Head #6

> Material: Steel, epoxy-coated

Finish	Item No.
white	260.35.740
brown	260.35.140

→ Angle Bracket

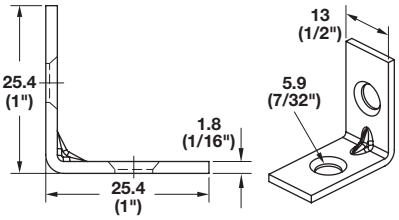

Flat Head #6

> Fits inside the 260.24.XXX brackets to provide additional support when attaching partitions to the wall
> Material: Steel

	Item No.
	260.35.990

Note
Requires 2 wood screws.

→ Angle Bracket

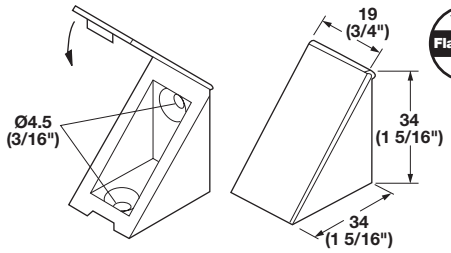

Flat Head #8

> With attached cover cap
> Material: Plastic

Color	Item No.
white	260.24.740
almond	260.24.440
brown	260.24.140
black	260.24.340
gray	260.24.541
bronze	260.24.141
ivory	260.24.741

→ H-Channel

Pan Head

> Used to attach two shelves together side by side in a corner application
> For use on 19 mm (3/4") material
> L x W x H: 327 x 22 x 25 mm (12 7/8" x 7/8" x 1")
> Material: Plastic

Color	Item No.
white	282.79.700
almond	282.79.400
black	282.79.300
brown	282.79.110
gray	282.79.501
bronze	282.79.101
ivory	282.79.701

Flat head screws	pages 12.7–12.8, 12.10, 12.13
Pan head screws	pages 12.9–12.10

Dimensional data not binding. Dimensions in mm, inches are approximate. We reserve the right to alter specifications without notice.

Outlet Grommet and Label Frames

→ Outlet Grommet

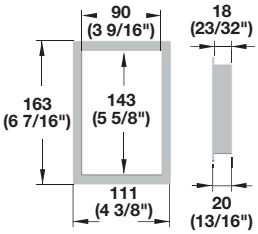

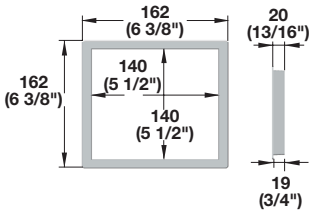

> Creates a finished look where partitions must be cut to allow access to a light switch or wall socket
> Material: Plastic

Color	Single	Double
white	631.24.760	631.24.761
almond	631.24.460	631.24.461
brown	631.24.170	631.24.171
black	631.24.360	631.24.361
gray	631.24.560	631.24.561
bronze	631.24.160	631.24.161
ivory	631.24.470	631.24.471

→ Label Frame

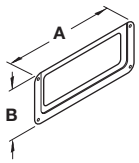

> Material: Steel; Finish: nickel-plated

A	B	Label	Window	Item No.
93 (3 11/16")	41 (1 5/8")	79 x 31 (3 1/8" x 1 1/4")	72 x 25 (2 13/16" x 1")	168.02.770
100 (3 15/16")	58 (2 5/16")	81 x 46 (3 3/16" x 1 13/16")	75 x 38 (2 15/16" x 1 1/2")	168.02.789
69 (2 11/16")	35 (1 3/8")	57 x 28 (2 1/4" x 1 1/8")	52 x 22 (2 1/16" x 7/8")	168.02.761

→ Label Frame

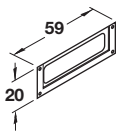

> Label: 52 x 14 mm (2 13/16" x 9/16")
> Window: 47 x 10 mm (1 7/8" x 3/8")
> Material: Steel

Finish	Item No.
nickel-plated	168.00.713

Dimensional data not binding. Dimensions in mm, inches are approximate. We reserve the right to alter specifications without notice.

HÄFELE

Ball Point and Coat Hooks

→ Ball Point Hook

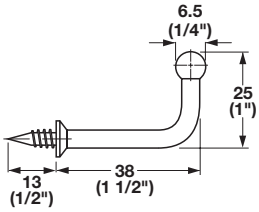

> Fits into 4 mm (5/32") holes
> Projection: 38 mm (1 1/2")
> Material: Steel

Finish	Item No.
chrome-plated	510.86.201
brass-plated	510.86.801
matt nickel	510.86.601

Note
Brass-plated image shown.

→ Ball Point Hook

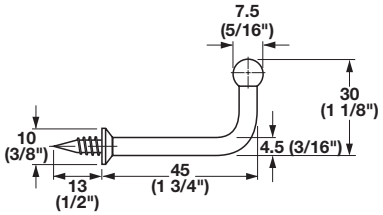

> Fits into 4 mm (5/32") holes
> Projection: 45 mm (1 3/4")
> Material: Steel

Finish	Item No.
chrome-plated	510.86.202
brass-plated	510.86.802
matt nickel	510.86.602

Note
Matt nickel image shown.

→ Knock-in Pin

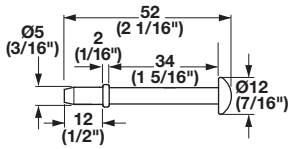

> Material: Steel

Finish	Item No.
black	510.86.350
chrome-plated	510.86.250
matt nickel	510.86.650

Supplied With
50 pcs.

Note
Dark oil-rubbed bronze image shown.

→ Coat Hook

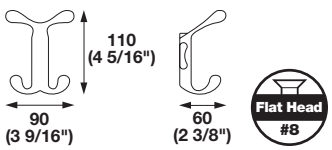

> Material: Zinc

Finish	Item No.
polished chrome	843.81.200
satin nickel	843.81.600

Note
Polished chrome image shown.

→ Coat Hook

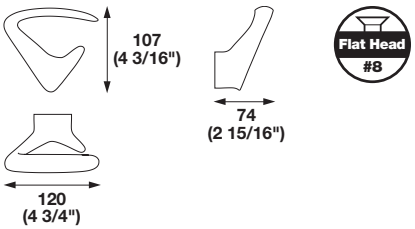

> Material: Zinc

Finish	Item No.
satin nickel	843.63.050

Flat head screws pages 12.7–12.8, 12.10, 12.13

Dimensional data not binding. Dimensions in mm, inches are approximate. We reserve the right to alter specifications without notice.

Coat Hooks

→ Coat Hook

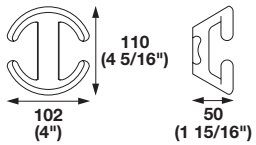

> Material: Zinc

Finish	Item No.
matt nickel	843.65.600
matt aluminum	843.65.900

Note
Matt nickel image shown.

→ Coat Hook

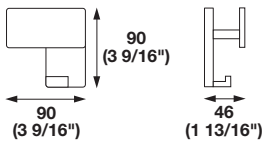

> Material: Zinc

Finish	Item No.
polished chrome	843.77.200
satin nickel	843.77.000
matt aluminum	843.77.900

Note
Polished chrome image shown.

→ Coat Hook

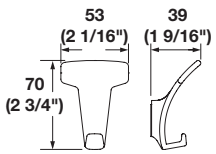

> Material: Zinc

Finish	Item No.
polished chrome	844.69.240
satin nickel	844.69.640

Note
Satin nickel image shown.

→ Coat Hook

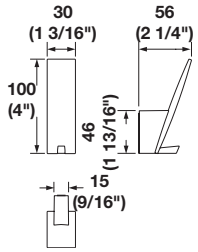

> Material: Zinc

Finish	Item No.
polished chrome	844.69.220

→ Coat Hooks

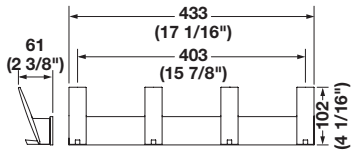

> Material: Zinc

Finish	Item No.
polished chrome	844.69.230
stainless steel look	844.69.630

Note
Polished chrome image shown.

Flat head screws pages 12.7–12.8, 12.10, 12.13

Dimensional data not binding. Dimensions in mm, inches are approximate. We reserve the right to alter specifications without notice.

Hat and Coat Hooks

→ Hat and Coat Hook

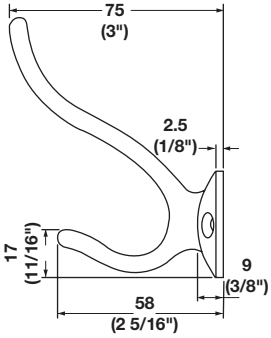

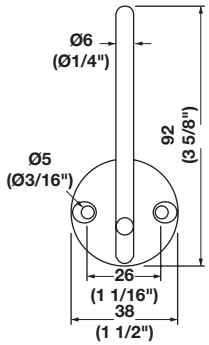

> Material: Zinc

Finish	Item No.
polished chrome	845.05.200
dark oil-rubbed bronze	845.05.300
matt nickel	845.05.600

Supplied With
Mounting hardware

Note
Polished chrome image shown.

→ Hat and Coat Hook

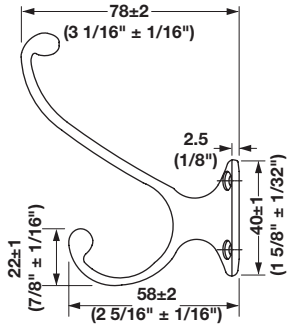

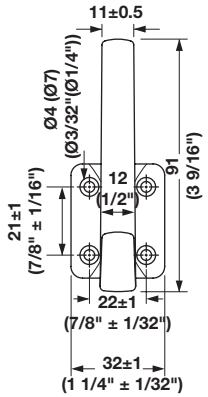

> Material: Zinc

Finish	Item No.
polished chrome	845.08.220
dark oil-rubbed bronze	845.08.120
matt nickel	845.08.620

Supplied With
Mounting hardware

Note
Dark oil-rubbed bronze image shown.

Dimensional data not binding. Dimensions in mm, inches are approximate. We reserve the right to alter specifications without notice.

Hat and Coat Hooks

→ Hat and Coat Hook

> W x D x H: 20 x 72 x 150 mm (7/8" x 2 7/8" x 6")
> CTC: 20 mm (7/8")
> Material: Stainless Steel

Finish	Item No.
matt	842.34.000

Supplied With
Mounting hardware

→ Hat and Coat Hook

Flat Head #8

> W x D x H: 18 x 93 x 158 mm (11/16" x 3 11/16" x 6 5/8")
> CTC: 20 mm (7/8")
> Material: Aluminum, anodized

Finish	Item No.
matt silver	842.02.906

→ Coat Hook

> W x D x H: 20 x 40 x 60 mm (7/8" x 1 1/2" x 2 3/8")
> CTC: 20 mm (7/8")
> Material: Stainless Steel

Finish	Item No.
matt	842.34.050

Supplied With
Mounting hardware

→ Coat Hook

Flat Head #8

> W x D x H: 18 x 35 x 60 mm (11/16" x 1 3/8" x 2 7/16")
> CTC: 20 mm (7/8")
> Material: Aluminum

Finish	Item No.
matt	842.01.909

→ Hat and Coat Hook

> W x D x H: 25 x 52 x 110 mm (1" x 2" x 4 3/8")
> CTC: 20 mm (7/8")
> Material: Stainless Steel

Finish	Item No.
matt	842.34.010

Supplied With
Mounting hardware

Flat head screws pages 12.7–12.8, 12.10, 12.13

Dimensional data not binding. Dimensions in mm, inches are approximate. We reserve the right to alter specifications without notice.

Coat Hooks

→ Coat Hook

Flat Head #6

> W x D x H: 53 x 53 x 55 mm (2 1/8" x 2 1/8" x 2 3/16")
> Material: Aluminum, polished

	Item No.
	846.52.808

→ Coat Hook

> W x D x H: 18 x 55 x 90 mm (11/16" x 2 3/16" x 3 9/16")
> Material: Zinc

Finish	Item No.
chrome polished	885.06.209
dark oil-rubbed bronze	845.01.300
matt nickel	845.01.600

Supplied With
Screws

Note
Dark oil-rubbed bronze image shown.

→ Coat Hook

Flat Head #6

> W x D x H: 13 x 22 x 30 mm (1/2" x 7/8" x 1 3/16")
> Material: Aluminum, polished

	Item No.
	845.00.809

→ Coat Hook

Flat Head #6

> Material: Aluminum, polished

W x D x H	Item No.
42 x 22 x 32 (1 11/16" x 7/8" x 1 1/4")	845.10.805
50 x 25 x 40 (2" x 1" x 1 9/16")	845.11.802
63 x 30 x 50 (2 1/2" x 1 3/16" x 2")	845.12.809

→ Coat Hook

W x D x H	Material/Finish	Item No.
19 x 28 x 38 (3/4" x 1 1/8" x 1 1/2")	Aluminum, polished	845.01.806
22 x 32 x 40 (7/8" x 1 1/4" x 1 9/16")	Aluminum, polished	845.02.803
18 x 40 x 40 (11/16" x 1 9/16" x 1 9/16")	Zinc, matt nickel	845.01.620*

***Supplied With**
Screws

Note
Aluminum, polished image shown.

Flat head screws pages 12.7–12.8, 12.10, 12.13

Dimensional data not binding. Dimensions in mm, inches are approximate. We reserve the right to alter specifications without notice.

HEWI

> Order mounting hardware separately
> Some items are special order and non-returnable
> Material: Polyamide

→ Hook

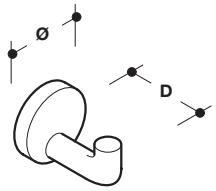

Pan Head #6

Pan Head #8

> Ø: 15 mm (5/8")

Ø Rosette x Depth D	Screw	Gloss	Matt
40 x 30 (1 9/16" x 1 3/16")	#6	842.61.1..	–
50 x 45 (2" x 1 3/4")	#8	842.61.2..	842.61.0..
60 x 65 (2 3/8" x 2 9/16")	#10	842.61.3..	–
70 x 100 (2 3/4" x 3 15/16")	#10	842.61.4..	842.62.3..

Note
Shown in matt finish.

→ Double Hook

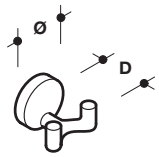

> Wall mounted

Ø Rosette x Depth D	Screw	Gloss	Matt
40 x 31 (1 9/16" x 1 1/4")	#6	842.62.1..	–
50 x 43.5 (2" x 1 3/4")	#8	842.62.2..	842.62.0..

Note
Shown in gloss finish.

→ Double Hook

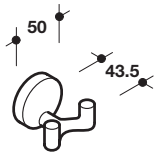

Pan Head #8

	Item No.
	842.65.7. .

Color specification: replace the decimals (. .) at the end of the stated item number with the color number of your choice.

18	24	33	36	50	55	72	74
mustard yellow	orange	ruby red	coral	steel blue	aqua blue	may green	apple green

84	86	90	92	95	97	98	99
umber	sand	jet black	anthracite gray	stone gray	light gray	signal white	pure white

Pan head screws pages 12.9–12.10

Dimensional data not binding. Dimensions in mm, inches are approximate. We reserve the right to alter specifications without notice.

HEWI

> Order mounting hardware separately
> Some items are special order and non-returnable

→ Hook with Door Buffer

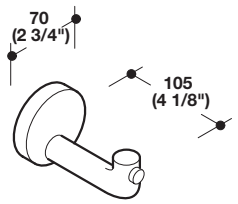

Pan Head #10

> Ø: 20 mm (13/16")
> Material: Polyamide; Buffer: Rubber; Color: black

	Item No.
	842.63.4..

→ Double Coat Hook

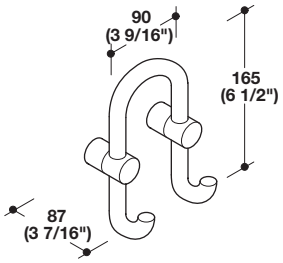

> Fixing points 75 mm (2 15/16") center to center
> Ø: 15 mm (5/8")
> Material: Polyamide

	Item No.
	842.84.0..

Supplied With
Mounting hardware

→ Ceiling Hook

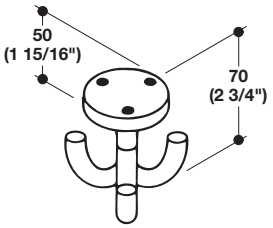

Flat Head #8

> Triple hook, rotates
> Ø: 11 mm (7/16")
> Material: Polyamide

	Item No.
	842.65.2..

→ Ceiling Hook

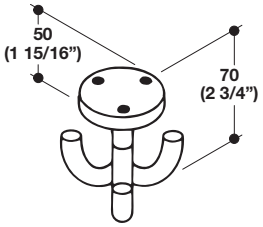

Flat Head #8

> Triple hook
> Ø: 11 mm (7/16")
> Material: Polyamide

	Item No.
	842.65.6..

Color specification: replace the decimals (. .) at the end of the stated item number with the color number of your choice.

18	24	33	36	50	55	72	74
mustard yellow	orange	ruby red	coral	steel blue	aqua blue	may green	apple green

84	86	90	92	95	97	98	99
umber	sand	jet black	anthracite gray	stone gray	light gray	signal white	pure white

Flat head screws	pages 12.7–12.8, 12.10, 12.13
Pan head screws	pages 12.9–12.10

Dimensional data not binding. Dimensions in mm, inches are approximate. We reserve the right to alter specifications without notice.

HEWI

> Order mounting hardware separately
> Some items are special ordered and non-returnable
> Material: Polyamide

→ Coat and Hat Hook

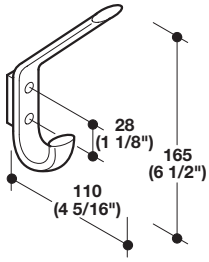

> Angled

Item No.
842.54.1..

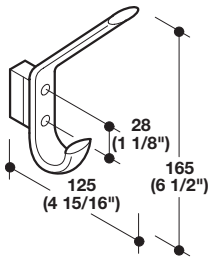

> Angled with 15 mm (9/16") depth spacer

Item No.
842.54.2..

Color specification: replace the decimals (. .) at the end of the stated item number with the color number of your choice.

18	24	33	36	50	55	72	74
mustard yellow	orange	ruby red	coral	steel blue	aqua blue	may green	apple green

84	86	90	92	95	97	98	99
umber	sand	jet black	anthracite gray	stone gray	light gray	signal white	pure white

Flat head screws pages 12.7–12.8, 12.10, 12.13

Dimensional data not binding. Dimensions in mm, inches are approximate. We reserve the right to alter specifications without notice.

HEWI

> Order mounting hardware separately
> Some items are special ordered and non-returnable
> Material: Polyamide

→ Coat and Hat Hook

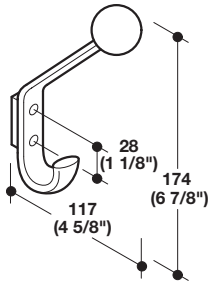

> Angled with ball top

Item No.
842.56.1..

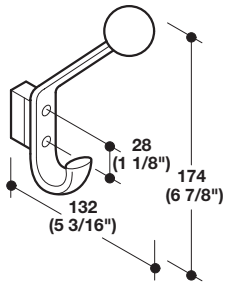

> Angled with ball top and 15 mm (9/16") depth spacer

Item No.
842.56.2..

→ Coat Hook

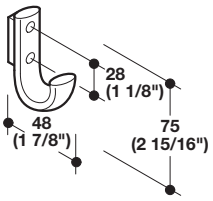

Item No.
842.52.1..

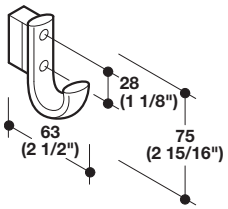

> With 15 mm (9/16") depth spacer

Item No.
842.52.2..

Color specification: replace the decimals (. .) at the end of the stated item number with the color number of your choice.

18	24	33	36	50	55	72	74
mustard yellow	orange	ruby red	coral	steel blue	aqua blue	may green	apple green

84	86	90	92	95	97	98	99
umber	sand	jet black	anthracite gray	stone gray	light gray	signal white	pure white

Flat head screws pages 12.7–12.8, 12.10, 12.13

Dimensional data not binding. Dimensions in mm, inches are approximate. We reserve the right to alter specifications without notice.

5

HÄFELE

OFFICE ORGANIZATION

Power and Charging

Docking Drawer 5.3-5.9
Quick Charging Units 5.10
Docking Stations 250/270/271 5.11-5.12
USB Charging Center 5.13
Charging Grommet 5.13
Hide-A-Dock 5.14
Pop-Up Power Stations 5.15-5.16
Dock 1100 5.17
Power Bars 5.18-5.19

Cable Management

Grommets 5.20-5.25
Waste Management Liner 5.26
Utility Grommets 5.27-5.28
Cable Managers 5.29-5.31
Wire Management 5.32

Organization

Hanging File System 5.33
Hanging File Brackets and Rails 5.34
Turntables 5.35

Computer Accessories

Monitor Arms 5.36
Sit to Stand Workstation 5.37
Pencil Drawers 5.38
Keyboard Trays 5.39-5.40, 5.44-5.45
Keyboard Arms 5.41-5.43
Keyboard Combo Packs 5.46-5.47
Monitor Suspension System 5.48-5.49
CPU Holders 5.50

Dimensional data not binding. Dimensions in mm, inches are approximate. We reserve the right to alter specifications without notice.

Docking Drawer from Häfele

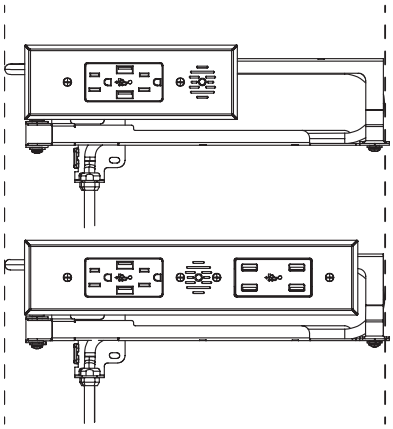

> Docking Drawer Blade Duo and Blade feature one size for all outlets for easy specification and installation
> All outlets can charge & power all of your devices
> Simplified electrical connection; every outlet now just plugs in
> 15 amp solutions feature 14 AWG cord approved for residential and commercial installations, most other devices do not use this approved power cord
> 20 amp outlets available
> ETL Listed for use in the US and Canada

Application examples:

Kitchens

Bathrooms

Home Office

Vanity Pull Out

Closet

Nightstand

Narrow Drawers

Entryway

Desks

Hotels

Dimensional data not binding. Dimensions in mm, inches are approximate. We reserve the right to alter specifications without notice.

Docking Drawer from Häfele

Choose Your Outlet Configuration
A variety of outlet configurations are available for all of your charging and powering needs from AC, USB-A and USB-C (PD) Power Delivery. Charge and power up to 8 devices with Docking Drawer Blade Duo or up to 4 devices with the Docking Drawer Blade.

15 amp solutions are perfect for any room and application. If your project requires 20 amps or the outlet will be plugged into a 20 amp NEMA 5-20R receptacle, specify a 20 amp Docking Drawer solution.

→ Start Your Project by Selecting the Drawer Type

Drawer Box Types	Minimum Drawer Box Width (OD)	Minimum Interior Drawer Box Height	Minimum Space Behind Drawer Box	Maximum Base Cabinet Depth
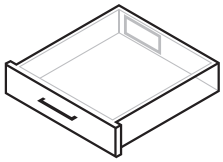 **Shallow Drawer** Most often found in kitchens, closets, offices, side tables, entryway tables, and retail projects.	**15"** or more	**3"** or more	**2"** or more	**24"** or less
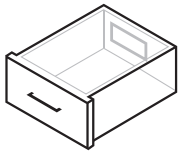 **Tall Drawer** Most often found in bathroom vanities and with above-glide mounting.	**13"** or more	**4"** or more	**2"** or more	**24"** or less
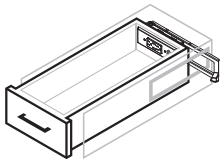 **Narrow Drawer** Most often found in bathroom vanities and with over-glide mounting. Requires a channel to be cut in the cabinet sidewall.	**9"** or more	**4"** or more	**2"** or more	**24"** or less
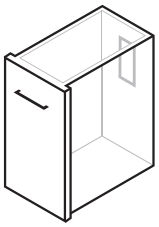 **Vertical Drawer** Most often found in bathroom vanities and kitchen pull-outs.	**8"** or more	**13"** or more	**2"** or more	**24"** or less

Dimensional data not binding. Dimensions in mm, inches are approximate. We reserve the right to alter specifications without notice.

Docking Drawer Blade Duo and Blade - 15 Amp Series

Outlet Features
> Keep your devices plugged in, ready to use and neatly stowed
> Outlets can be mounted horizontally, vertically, left or right
> Works with any side mount, undermount and soft close slides
> ETL Listed for use in the US and Canada

Cabinet Specifications
> Fits cabinet depths ≤ 610 mm (24") with a minimum drawer box width (OD) ≥ 380 mm (15")
> Minimum space behind drawer box: 51 mm (2")
> Minimum interior drawer box height: 76 mm (3")

Electrical Specifications
> 1.37 m (4 1/2') NEMA 5-15P power cord plugs into a NEMA 5-15R receptacle
> 15 amp outlets with 14 AWG cord approved for residential and commercial Installations
> Max rated current: 15 amps @ 120 VAC
> USB-C (Power Delivery): 3 amps @ 9 VDC" (30W)
> USB-A: 3.6 amps @ 5VDC or 4.2 amps @ 5VDC

Safety Features
> Interlock Thermostat de-energizes outlet when the surrounding temperature exceeds 120°F
> Optional Safety Interlock Box adds a limit switch that senses the drawer position and de-energizes the outlet when the drawer starts to close, see page **5.9**

Note
Safety Interlock Box is optional in the United States. Required in Canada to satisfy the requirements of the Canadian Electrical Code (CEC).

Docking Drawer Project Packs
> For larger projects such as hotels, lockers, commercial installations, etc.
> Minimum order quantity is 100 pcs.
> Bulk packed and shipped to a single location

IDEAL FOR TECHNOLOGY · IDEAL FOR HAIR DRYERS · INTERLOCKING THERMOSTAT · ELECTRICALLY LISTED & SAFE · ETL LISTED C US Intertek

→ Docking Drawer Blade with USB-C (PD) Power Delivery

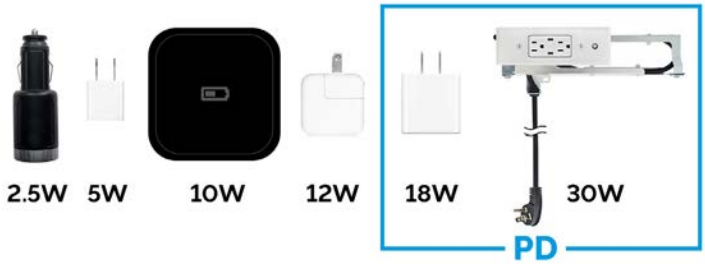

Benefits of Docking Drawer series with USB-C with Power Delivery
> USB-C is the new USB standard that is maturing in the market
> **Faster** - USB-C (PD) can charge your device up to 70% faster than standard 12W charging found in USB-A ports. Therefore, your devices will need less time to reach a full charge. A quick 10-minute charge with USB-C (PD) might be all you need to get going.
> **More Powerful** - With up to 2X more power than typical USB ports, Docking Drawer with USB-C (PD) have up to 30W of power available and can charge larger devices like tablets and laptops with just a USB-C cable.
> **Safer** - Docking Drawer series with USB-C (PD) contain a smart chip which makes charging safer with 3 key features:
- Recognizes and optimizes the charging requirements for each individual device and is especially designed to handle new higher levels of power.
- Built-in overcurrent protection safely keeps devices from receiving too much power.
- Features an internal thermoregulator to prevent electronics from overheating, which is not available for USB-A.

Dimensional data not binding. Dimensions in mm, inches are approximate. We reserve the right to alter specifications without notice.

HÄFELE

Docking Drawer Blade 15 Amp Series

→ Docking Drawer Blade

> With 2 x AC outlets and 2 x USB-A ports
> Material: Metal with Plastic and Electrical Components

Finish	Model	Item No.
black	1514-110B	822.53.359
white	1514-110W	822.53.360
stainless steel	1514-110S	822.53.361

→ Docking Drawer Blade

> With 4 x USB-A ports
> Material: Metal with Plastic and Electrical Components

Finish	Model	Item No.
black	1514-120B	822.53.362
white	1514-120W	822.53.363
stainless steel	1514-120S	822.53.364

→ Docking Drawer Blade

> With 2 x AC outlets
> Material: Metal with Plastic and Electrical Components

Finish	Model	Item No.
black	1514-160B	822.53.371
white	1514-160W	822.53.372
stainless steel	1514-160S	822.53.373

→ Docking Drawer Blade

> With 2 x AC outlets and 2 x USB-C (PD) ports
> Material: Metal with Plastic and Electrical Components

Finish	Model	Item No.
black	1514-130B	822.53.365
white	1514-130W	822.53.366
stainless steel	1514-130S	822.53.367

→ Designer Cover Plates

> Brushed brass finish
> Available for Blade and Blade Duo

Version	Item No.
Plate for Blade	822.53.197
Plate for Blade Duo	822.53.193

Dimensional data not binding. Dimensions in mm, inches are approximate. We reserve the right to alter specifications without notice.

Docking Drawer Blade Duo 15 Amp Series

→ Docking Drawer Blade Duo

> With 2 x AC outlets, 2 x USB-C (PD) ports and 4 x USB-A ports
> Material: Metal with Plastic and Electrical Components

Finish	Model	Item No.
black	1514-232B	822.53.350
white	1514-232W	822.53.351
stainless steel	1514-232S	822.53.352

→ Docking Drawer Blade Duo

> With 2 x AC outlets, 2 x USB-A and 4 x USB-A ports
> Material: Metal with Plastic and Electrical Components

Finish	Model	Item No.
black	1514-212B	822.53.353
white	1514-212W	822.53.354
stainless steel	1514-212S	822.53.355

→ Docking Drawer Blade Duo

> With 4 x AC outlets
> Material: Metal with Plastic and Electrical Components

Finish	Model	Item No.
black	1514-266B	822.53.368
white	1514-266W	822.53.369
stainless steel	1514-266S	822.53.370

→ Docking Drawer Blade Duo

> With 4 x AC outlets and 4 x USB-A ports
> Material: Metal with Plastic and Electrical Components

Finish	Model	Item No.
black	1514-211B	822.53.332
white	1514-211W	822.53.333
stainless steel	1514-211S	822.53.334

Dimensional data not binding. Dimensions in mm, inches are approximate. We reserve the right to alter specifications without notice.

Docking Drawer Blade Duo and Blade - 20 Amp Series

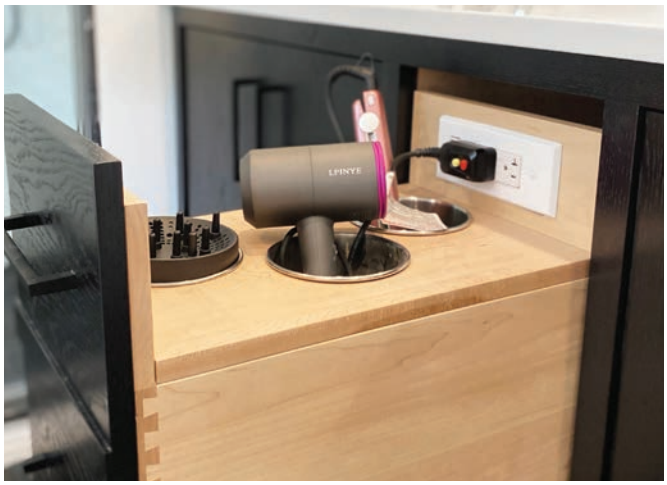

The Docking Drawer Blade and Blade Duo in-drawer outlets are rated for any charging or powering applications and are designed to fit into almost every cabinet. The 20 amp Docking Drawer Blade Duo and Blade are an all-in-one series which can charge AND power any type of device in even more compact spaces. All Docking Drawer Blade and Blade Duo feature an Interlock Thermostat that de-energizes the outlet if the surrounding temperature exceeds 120° F.

Outlet Features
> Keep your devices plugged in, ready to use and neatly stowed away
> Outlets can be mounted horizontally, vertically, left or right
> Works with any type of side mount, undermount and soft closing slides
> ETL Listed to UL962a

Cabinet Specifications
> Fits shallow drawers:
Minimum drawer box width (OD): 380 mm (15")
Minimum interior drawer box height: 76 mm (3")

> Fits tall drawers:
Minimum drawer box width (OD): 330 mm (13")
Minimum interior drawer box height: 101 mm (4")

> Fits narrow drawers:
Minimum drawer box width (OD): 228 mm (9")
Minimum interior drawer box height: 101 mm (4")

> Fits vertical drawers:
Minimum drawer box width (OD): 203 mm (8")
Minimum interior drawer box height: 330 mm (13")

Electrical Specifications
> 3' NEMA 5-20P power cord plugs into a NEMA 5-20R receptacle
> Max. current: AC: 16 amps @ 120 VAC
USB-A: 3.6 amps @ 5VDC

Safety Features
> Interlock Thermostat - De-energizes outlet when the surrounding temperature exceeds 120°F

Requires a 20 amp wall receptacle with T-shaped prongs for the NEMA 5-20P

Features 3' long heavy-duty 12 AWG power cord with NEMA 5-20P plug and 20 amp receptacle

Dimensional data not binding. Dimensions in mm, inches are approximate. We reserve the right to alter specifications without notice.

Docking Drawer Blade Duo and Blade - 20 Amp Series

→ Docking Drawer Blade

> With 2 x AC Outlets
> Material: Metal with Plastic and Electrical Components

Finish	Model	Item No.
black	2012-160B	822.53.392
white	2012-160W	822.53.393
stainless steel	2012-160S	822.53.394

→ Docking Drawer Blade

> With 2 x GFCI Outlets
> Material: Metal with Plastic and Electrical Components

Finish	Model	Item No.
black	2012-150B	822.53.401
white	2012-150W	822.53.400
stainless steel	2012-150S	822.53.399

→ Docking Drawer Blade Duo

> With 2 x AC Outlets, 2 x USB-C (PD) ports and 4 x USB-A ports
> Material: Metal with Plastic and Electrical Components

Finish	Model	Item No.
black	2012-232B	822.53.380
white	2012-232W	822.53.381
stainless steel	2012-232S	822.53.382

Dimensional data not binding. Dimensions in mm, inches are approximate. We reserve the right to alter specifications without notice.

Docking Drawer Style Drawer Flush 20 Amp Series

Need to Install Style Drawer Flush into a drawer less than 267 mm (10.5") wide? Try our Narrow Drawer Installation Tip:

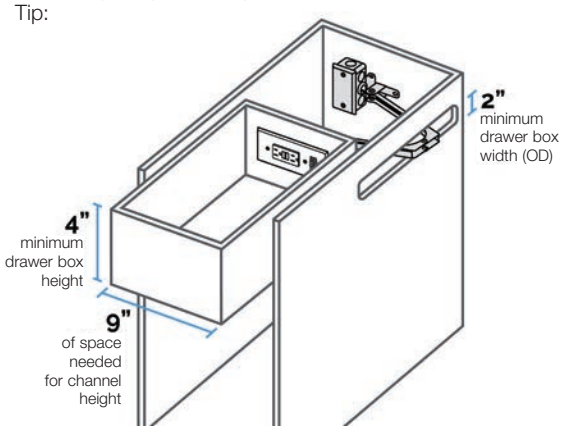

Ideally suited narrow and shallow drawers, the 20 amp Style Drawer Flush powering outlets are designed to fit into narrow vanity drawers. Style Drawer Flush features an Interlock Thermostat that de-energizes the outlet if the surrounding temperature exceeds 120° F.

Outlet Features
> Keep your devices plugged in, ready to use and neatly stowed
> Outlets can be mounted horizontally, vertically, left or right
> Works with any side mount, undermount and soft close slides
> ETL Listed to UL962a

Mounting Details
> Minimum space behind drawer box: 127 mm (5")
> Minimum interior drawer box height: 102 mm (4")

Electrical Specifications
> Hardwired connection
> Max rated current: AC: 20 amps @ 120 VAC

Safety Features
> Interlock Thermostat - De-energizes outlet when the surrounding temperature exceeds 120°F

→ Style Drawer Flush 18

> With 2 x AC GFCI Outlets
> For ≤ 457 mm (18") cabinet depths, min. drawer box with (OD) ≥ 268 mm (10.5")
> Material: Metal with Plastic and Electrical Components

Finish	Model	Item No.
black	0290-00050B	822.53.027
white	0290-00050W	822.53.028
stainless steel	0290-00050S	822.53.053

→ Style Drawer Flush 21

> With 2 x AC GFCI Outlets
> For ≤ 533 mm (21") cabinet depths, min. drawer box with (OD) ≥ 305 mm (12")
> Material: Metal with Plastic and Electrical Components

Finish	Model	Item No.
black	0290-00032B	822.53.019
white	0290-00032W	822.53.020
stainless steel	0290-00032S	822.53.072

→ Style Drawer Flush 24

> With 2 x AC GFCI Outlets
> For ≤ 610 mm (24") cabinet depths, min. drawer box with (OD) ≥ 343 mm (13.5")
> Material: Metal with Plastic and Electrical Components

Finish	Model	Item No.
black	0290-00033B	822.53.017
white	0290-00033W	822.53.018
stainless steel	0290-00033S	822.53.073

Dimensional data not binding. Dimensions in mm, inches are approximate. We reserve the right to alter specifications without notice.

Docking Drawer - Safety Interlock Outlet with Blade Limit Switch

The 15 amp Safety Interlock Outlet is a single gang electrical outlet featuring one NEMA 5-15 receptacle and one interlock switch connector. The Limit Switch plugs into safety outlet and mounts to any 15 amp Docking Drawer Blade series outlet to detect the drawer position and will de-energize the outlet when the drawer starts to close.

> ETL Listed for use in the US and Canada and satisfies the requirements of the Canadian Electrical Code (CEC) for AC outlets in enclosed spaces.
> In addition to meeting Canadian Codes, the Blade Limit Switch can add a second layer of protection, for example; second homes, timeshare or Airbnb properties, senior care facilities, teen bathrooms, etc.

→ 15 amp Safety Interlock Outlet with Blade Limit Switch

> With 1 NEMA 5-15R Tamper Resistant outlet
> LED indicator light displays interlock status
> Input: 100-125 VAC, 50/60 Hz
> AC Output: 15A @ 125 VAC, 1875 VA max.
> With 6 ft. low voltage cable
> Fastens to the rear mounting bracket of any 15 amp Blade series

	Item No.
	822.53.319

Supplied With
1 outlet and 1 limit switch

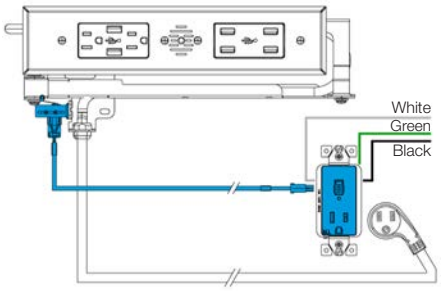

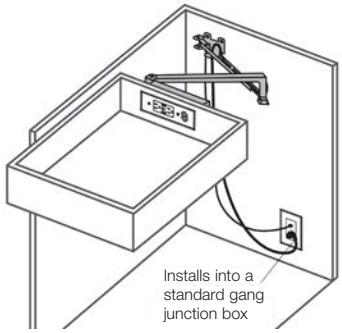

Please note:
Existing outlet is to be removed and replaced with Interlock outlet

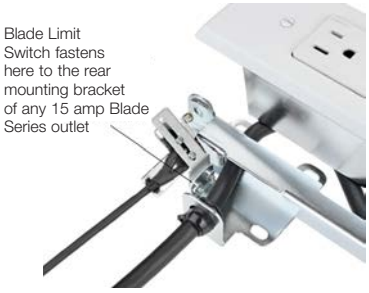

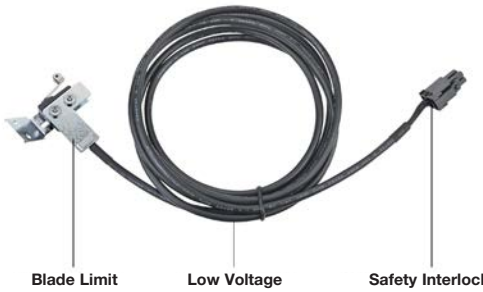

Blade Limit Switch
Connects to any 15 amp Blade Series outlet

Low Voltage Cable
6 ft. long

Safety Interlock Outlet Connector
Connects to the Safety Interlock Outlet

Dimensional data not binding. Dimensions in mm, inches are approximate. We reserve the right to alter specifications without notice.

Quick Charging Units with dual USB Ports

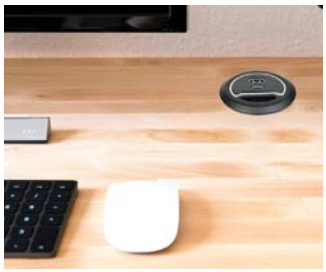

> USB-C power delivery 3.0 offers 46 watts of power and can charge devices up to 70% faster
> Includes a USB-A port allowing users to charge 2 units simultaneously
> Easy to install
> Available in grommet or edge mount versions

→ Grommet Mount

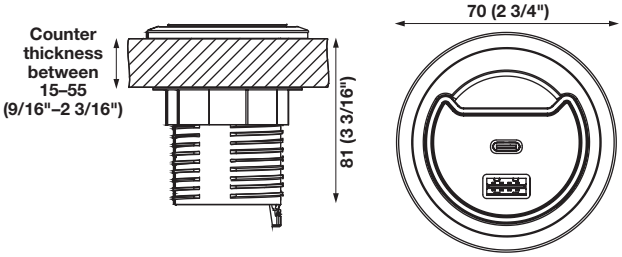

> For Ø50–Ø60 mm (2"–2 3/8") through holes
> With cable pass-through slot
> Material: Plastic

Color	Item No.
black	822.99.357
off-white	822.99.358

Supplied With
Power adapter
Power cord

→ Edge Mount

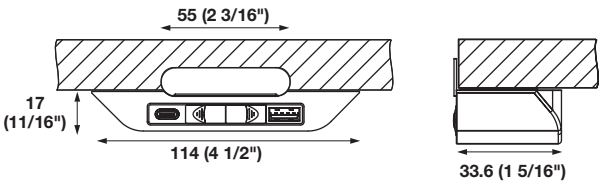

> Mounts with adhesive tape and/or screws
> Sliding covers protect the ports when not in use
> Material: Plastic

Color	Item No.
black	822.99.355
off-white	822.99.356

Supplied With
Power adapter
Power cord

Dimensional data not binding. Dimensions in mm, inches are approximate. We reserve the right to alter specifications without notice.

Docking Station

Top view of closed docking stations

> With touch release spring-loaded lid
> 1 AC grounded outlet: 125V 15A max.
> Installs in a Ø76 mm (3") hole and tightens with the nut from below
> Material: Plastic

UL LISTED

→ Docking Station 250

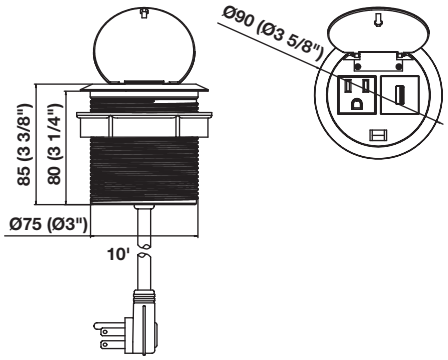

> With 1 USB-A port @ 10.5 watts

Color	Item No.
black	822.99.330
white	822.09.304

Supplied With
10' 14AWGx3C power cord

→ Docking Station 270/280

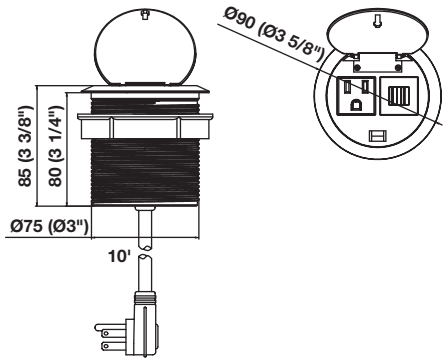

Version	Black	White
With 2 USB-A ports @ 10.5 watts each	822.09.305	822.09.306
With 1 USB-A port @ 10.5 watts and 1 USB-C port @ 12 watts	822.09.400	822.09.401

Supplied With
822.09.305/306 with 10' 14AWGx3C power cord
822.09.400/401 with 6' 14AWGx3C power cord

Dimensional data not binding. Dimensions in mm, inches are approximate. We reserve the right to alter specifications without notice.

Docking Station

→ Docking Station 271/281

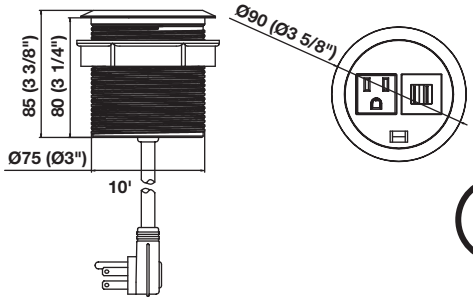

> Without lid
> 1 AC grounded outlet: 125V 15A max.
> Installs in a Ø75 mm (3") hole, tightens with the nut from below
> Material: Plastic

Version	Black	White
With 2 USB-A ports @ 10.5 watts each	822.09.307	822.09.308
With 1 USB-A port @ 10.5 watts and 1 USB-C port @ 12 watts	822.09.402	822.09.403

Supplied With
822.09.307/308 with 10' 14AWGx3C power cord
822.09.402/403 with 6' 14AWGx3C power cord

→ Dock 150 Wireless and USB Charging Station

> Offers wireless charging Qi V1.2 compliant
> With pop-up lid to expose 3 additional USB ports which can be hidden when not in use
> With rubberized finish to prevent unintentional cell phone movement during wireless charging
> Input: DC 5V 6 amps
> Output: Wireless charger 5 watts max.
> 1 x USB-C Port, DC 5V 2.4A/12 watts max.
> 2 x USB-A Ports, DC 5V 1A/5 watts max.
> With DC 5V 6A Transformer, with 8 ft power cord
> Press-fits in a 75 mm (3") diameter hole
> Material: Plastic

Color	Item No.
black	822.99.370

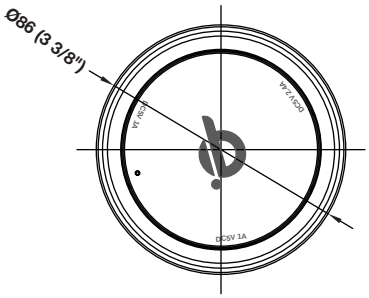

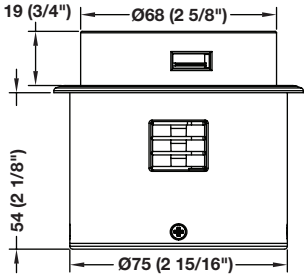

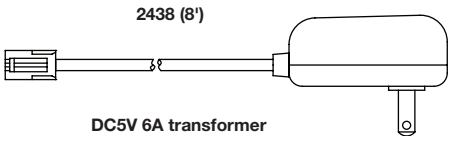

Dimensional data not binding. Dimensions in mm, inches are approximate. We reserve the right to alter specifications without notice.

Charging

→ Charging Grommet

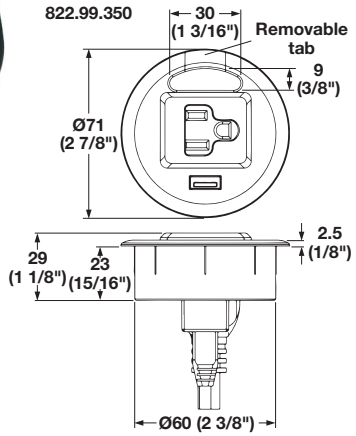

> With 120V socket and USB charging port 2.0A
> Easily replace a standard Ø60 mm (2 3/8") desktop cable grommet
> With cable opening and removable tab to feed cables through
> Material: Plastic

Color	Item No.
black	822.99.350

Supplied With
Wall transformer
10A X 1.5 m power cable
1 m USB cable

Dimensional data not binding. Dimensions in mm, inches are approximate. We reserve the right to alter specifications without notice.

Docking Stations

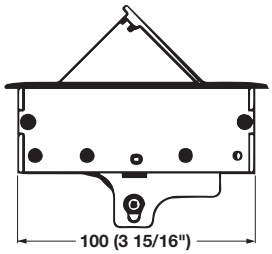

UL LISTED

> For home/small office, hotel furniture or cabinets
> Suitable for commercial applications
> Easily closes and hidden when not in use
> Simply press on the lid to open
> Great for charging iPhones, smart phones, iPads, tablets, digital cameras and other USB chargeable devices
> Requires approx. 102 mm (4") of space under worksurface
> Material: Aluminum

→ Hide-A-Dock

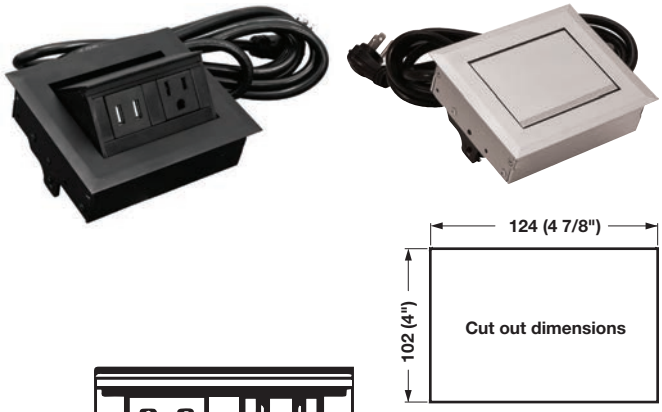

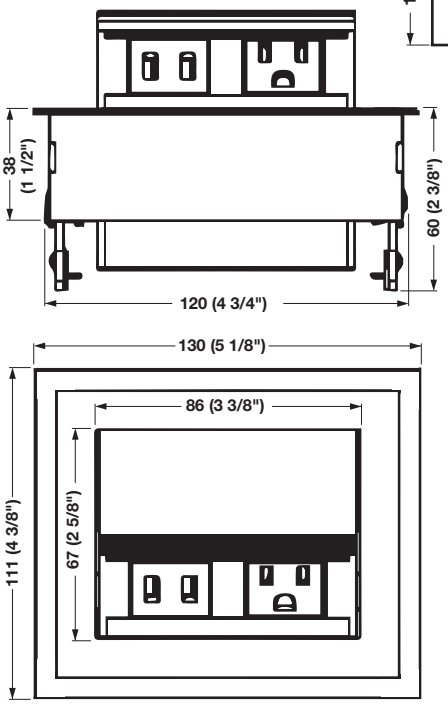

> With 1 grounded AC outlet; 125V 15A max.

Version	Black	Silver
With 2 USB-A ports @ 10.5 watts each	822.09.330	822.09.930
With 1 USB-A port @ 10.5 watts and 1 USB-C port @ 12 watts	822.09.405	822.09.404

Supplied With 10' Power cord

→ Hide-A-Dock

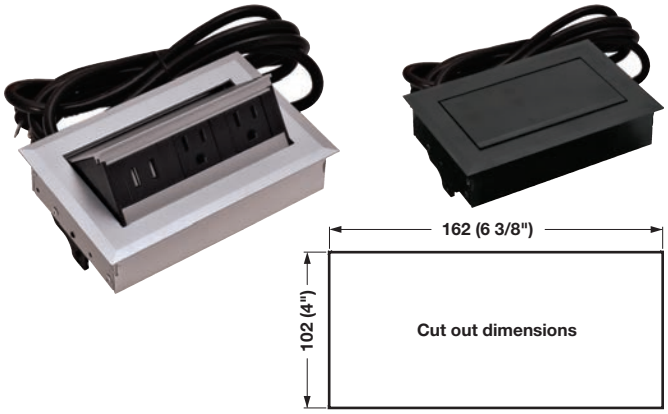

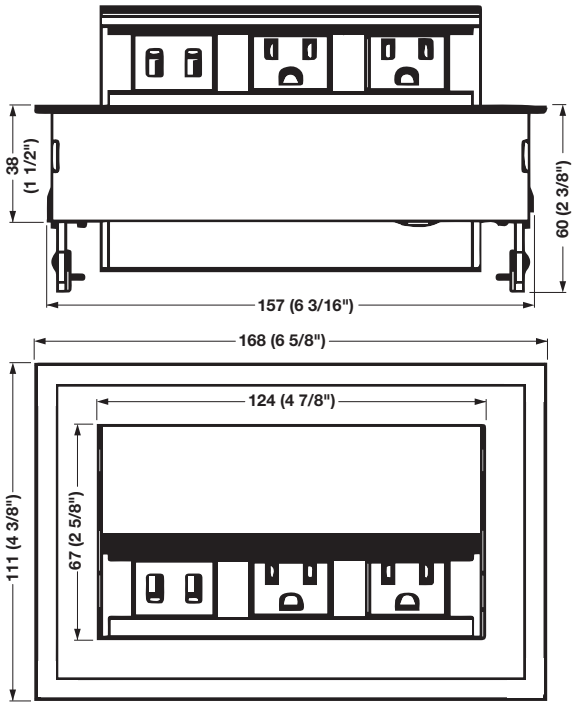

> With 2 grounded AC outlets; 125V 15A max.

Version	Black	Silver
With 2 USB-A ports @ 10.5 watts each	822.09.331	822.09.931
With 1 USB-A port @ 10.5 watts and 1 USB-C port @ 12 watts	822.09.406	822.09.407

Supplied With 10' Power cord

Dimensional data not binding. Dimensions in mm, inches are approximate. We reserve the right to alter specifications without notice.

Power Stations

> Requires Ø76 mm (3") hole for installation
> Requires 305 mm (12") space under work surface
> Material: Plastic; Color: black

UL LISTED

→ Pop-Up Power Station

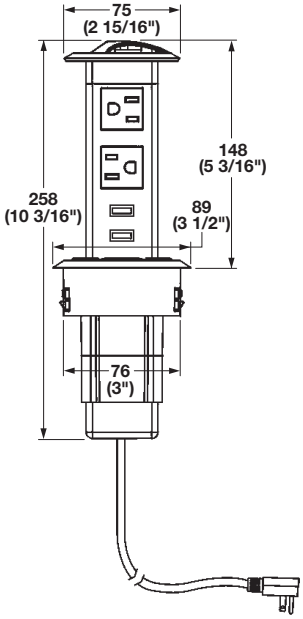

> With 2 AC grounded outlets; 125V 12A max.

Version	Item No.
With 2 USB-A ports @ 5.25 watts each	822.99.340
With 1 USB-A port @ 10.5 watts and 1 USB-C port @ 12 watts	822.09.409

Supplied With
6' Power cord

Note
USB ports charge through the unit's power cord.

→ Pop-Up Power Station

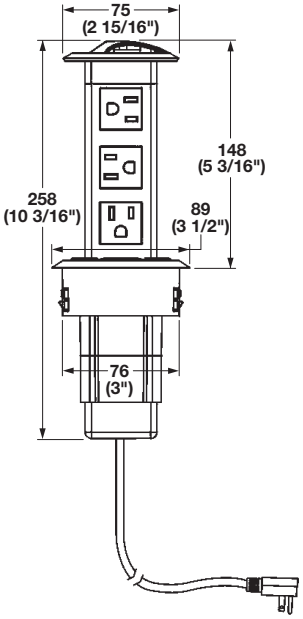

> With 3 AC grounded outlets; 125V 12A Max.

	Item No.
	822.99.320

Supplied With
6' Power cord

Dimensional data not binding. Dimensions in mm, inches are approximate. We reserve the right to alter specifications without notice.

HÄFELE

Powerdock

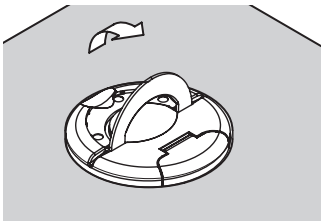

To use the Pop-up socket, gently lift up the handle on the top cover until all socket outlets are exposed and the green stop/release button clicks and locks in place.

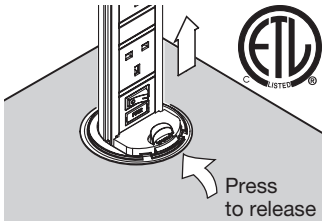

Press the master switch on. A green light confirms that the power is available. You can use all power sockets. The unit can be retracted in position by pressing the green stop/release button and pushing the unit down until it's flush with the surface, leaving the engaged cables on the window of the top cover.

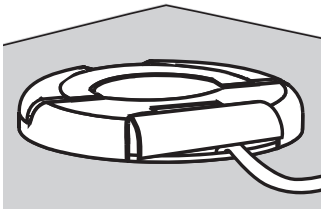

Insert SensioPod into the hole to discreetly hide away when not in use.

→ SensioPod Vertical Powerdock

> Ideal for kitchens, offices, hotel rooms, dorm rooms, etc.
> Includes an On/Off switch
> 2 USB charging ports 2.0A
> 3 power sockets, 120V–10A
> IP54 Rated- splash proof in retracted position
> 337 mm (13 1/4") space required above surface; 362 mm (14 1/2") required below
> Requires a Ø90–Ø92 mm (3 9/16"–3 5/8") hole for installation
> Material: Plastic

Color	Item No.
black/aluminum with chrome top	822.82.930
black/aluminum with black top	822.82.330

Supplied With
8' Power cord

Note
To use SensioPod in a kitchen or bathroom countertop application, plug power cord into a GFCI (ground fault circuit interrupter) outlet.

Dimensional data not binding. Dimensions in mm, inches are approximate. We reserve the right to alter specifications without notice.

Flush Mount Power and Data Module

> 1 tamper resistant grounded AC outlet, 125 V 15 A Max
> Through-bolt mounted
> Material: Aluminum; Color: black

UL LISTED

→ Dock 1100

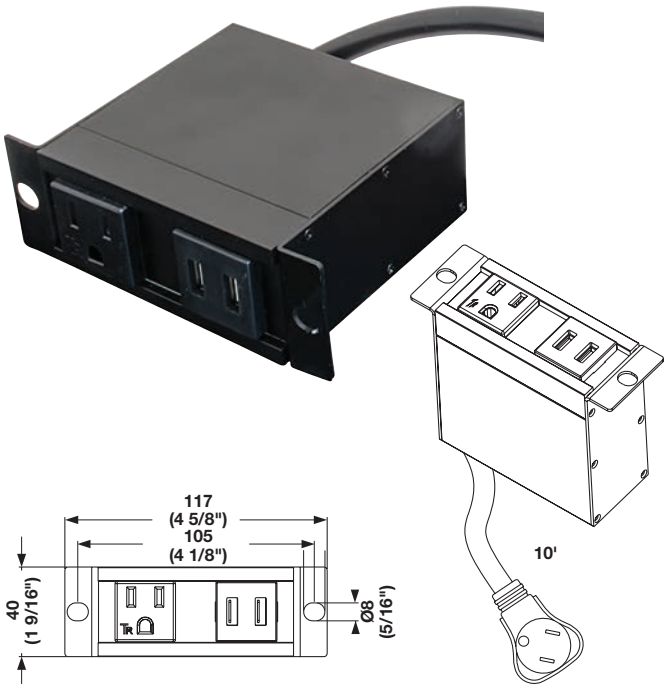

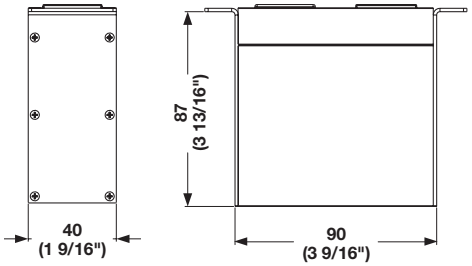

Version	Item No.
With 2 USB-A ports @ 10.5 watts each	822.09.350
With 1 USB-A port @ 10.5 watts and 1 USB-C port @ 12 watts	822.09.410

Supplied With
10' Power cord

Note
Order face plates separately, see below.

→ Flush Mount Face Plates

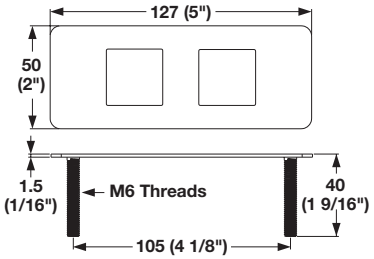

> Material: Steel, epoxy-coated

Finish	Item No.
black	822.09.360
white	822.09.760
silver	822.09.960

Dimensional data not binding. Dimensions in mm, inches are approximate. We reserve the right to alter specifications without notice.

Power Bars

→ Powering and Charging Bars

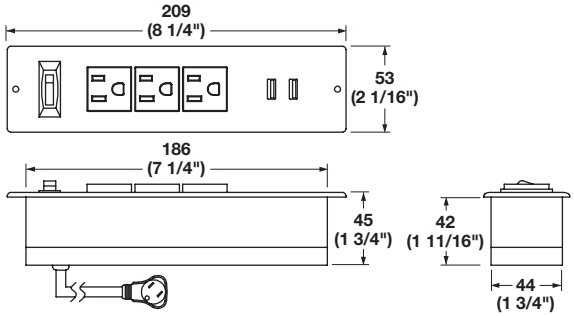

CUT OUT DIMENSIONS FOR FACE PLATE MOUNT: 187 x 48 (7 3/8" x 1 7/8")

> Face plate mounting
> 3 AC grounded outlets; 125V 12A max.
> Overload protection with reset switch
> Material: Plastic; Color: black

Version	Item No.
With 2 USB-A ports @ 5.25 watts each	822.09.310
With 1 USB-A port @ 10.5 watts and 1 USB-C port @ 12 watts	822.09.411

Supplied With
10' 14AWGx3C power cord

UL LISTED

→ Powering and Charging Bars

UL LISTED

> Face plate mounting
> Fast charging with 2 USB Ports 5V DC 4.2A (21 watts) of charging power
> 1 tamper resistant (TR) AC grounded outlet; 125V 12A max.
> Cutout dimension: 114 x 48 mm (4 1/2" x 1 7/8")
> Material: Plastic

Version	Black	White
With 2 USB-A ports @ 10.5 watts each	822.09.302	822.09.303
With 1 USB-A port @ 10.5 watts and 1 USB-C port @ 12 watts	822.09.413	822.09.415

Supplied With
10' 14AWGx3C power cord

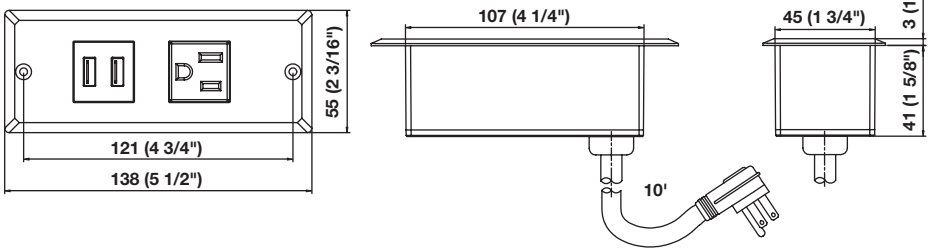

CUT OUT DIMENSIONS: 114 x 48 (4 1/2" x 1 7/8")

Dimensional data not binding. Dimensions in mm, inches are approximate. We reserve the right to alter specifications without notice.

Power Bars

> For home/small office, cabinets, etc.
> Ideal for use with Adjustable Table Systems
> With 6 tamper resistant grounded AC outlets
> Overload protection with reset switch
> Rating: 125V, 60Hz, 15A
> Screw mounted
> Cord length: Relaxed: 5'; Fully extended: 10'
> Material: Plastic; Color: black

→ Power Bar with Spiral Expandable Cord

	Item No.
	822.09.340

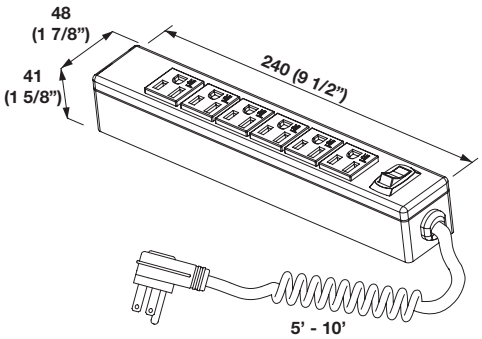

Dimensional data not binding. Dimensions in mm, inches are approximate. We reserve the right to alter specifications without notice.

Cable Grommets

→ Plastic Grommets

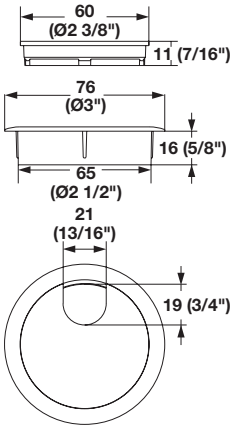

> Two-piece, round; with removable top
> Thin design, can be used with 16 mm (5/8") thick panels
> For press-fitting in 65 mm (2 1/2") holes
> Material: Plastic

Color	Item No.
bronze	631.26.111
dark brown	631.26.112
black	631.26.311
almond	631.26.411
ivory	631.26.412
gray	631.26.511
stone	631.26.512
candlelight	631.26.611
white	631.26.711

→ Metal Grommets, Height: 21 mm (7/8")

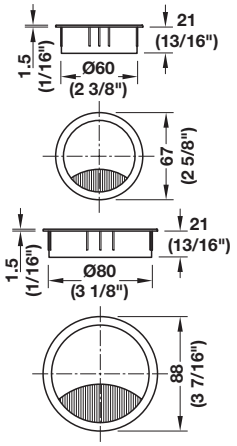

> Two-piece, round; lid with brush and locking mechanism
> Push fits into Ø60 or Ø80 mm (2 3/8" or 3 1/8") hole
> Height: 21 mm (13/16")
> Material: Zinc Alloy

Drill hole	Finish	Item No.
Ø60 (2 3/8")	matt chrome-plated	631.31.412
	stainless steel look	631.31.012
	black	631.31.312
Ø80 (3 1/8")	matt chrome-plated	631.31.414
	stainless steel look	631.31.014
	black	631.31.314

→ Metal Grommets, Height: 12 mm (1/2")

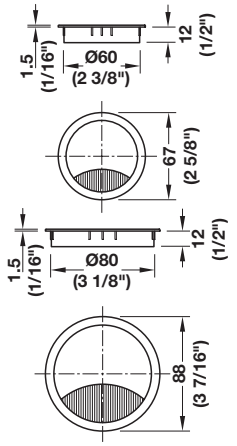

> Two-piece, round; lid with brush and locking mechanism
> Push fits into Ø60 or Ø80 mm (2 3/8" or 3 1/8") hole
> Height: 12 mm (1/2")
> Material: Zinc Alloy

Drill hole	Finish	Item No.
Ø60 (2 3/8")	stainless steel look	631.31.002
	black	631.31.302
Ø80 (3 1/8")	stainless steel look	631.31.004
	black	631.31.304

Dimensional data not binding. Dimensions in mm, inches are approximate. We reserve the right to alter specifications without notice.

Grommets

→ Cable Set, two-piece, round

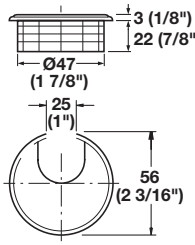

> With break-away tab cover cap
> For press-fitting or gluing into Ø47 mm (1 7/8") holes
> Material: Plastic

Color	Item No.
almond	429.93.019
brown	429.93.117
black	429.93.313

→ Cable Set, two-piece, round

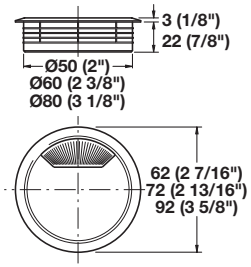

> With spring closure
> For press-fitting or gluing
> Material: Plastic

Color	Ø50 (2")	Ø60 (2 3/8")	Ø80 (3 1/8")
white	429.99.735	429.99.726	429.99.744
light gray	429.99.539	429.99.520	429.99.548
beige	429.99.431	429.99.422	429.99.440
almond	429.99.039	429.99.020	429.99.048
brown	429.99.137	429.99.128	429.99.146
black	429.99.333	429.99.324	429.99.342
chrome matt	429.97.222	429.97.231	429.97.240

→ Cable Set, two-piece, round

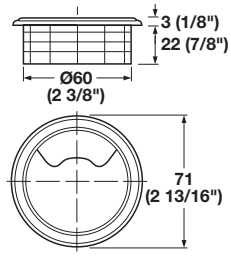

> With break-away tab cover cap
> For press-fitting or gluing into Ø60 mm (2 3/8") holes
> Material: Plastic

Color	Item No.
almond	429.93.028
brown	429.93.126
black	429.93.322

→ Oval Grommet, two-piece

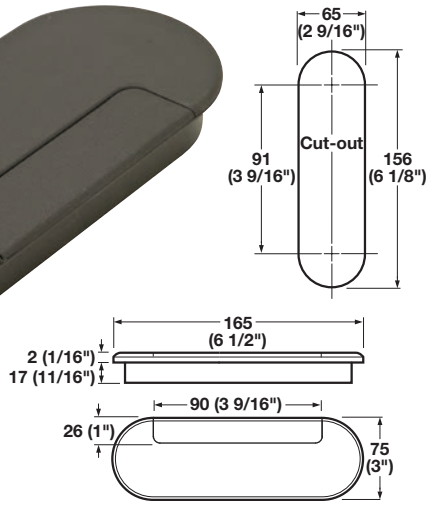

> With break-away tab cover cap
> For press-fitting or gluing
> Material: Plastic

Color	Item No.
black	429.87.306
white	429.87.700

Dimensional data not binding. Dimensions in mm, inches are approximate. We reserve the right to alter specifications without notice.

Metal Grommets

> Metal grommets are an elegant upgrade from standard plastic grommets
> With straight edge, they can be recessed into top for flush applications

→ One-piece, round

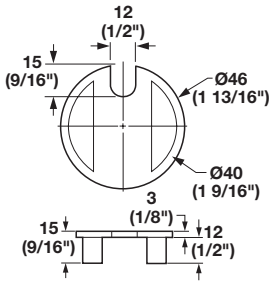

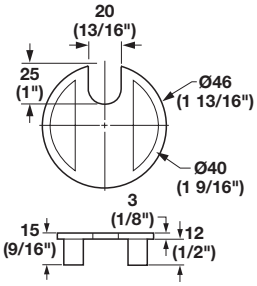

> For press-fitting or gluing in Ø40 mm (1 9/16") holes
> Two aperture openings to choose from
> Material: Zinc die-cast, plated or epoxy-coated

Finish	12 x 15 mm (1/2" x 9/16")	20 x 25 mm (13/16" x 1")
chrome polished	429.94.212	429.94.221
brass polished	429.94.810	429.94.829
black epoxy	429.94.310	429.94.319
brushed bronze	429.94.026	429.94.034
brushed nickel	429.94.612	429.94.621
matt nickel	429.94.412	429.94.421

→ One-piece, round

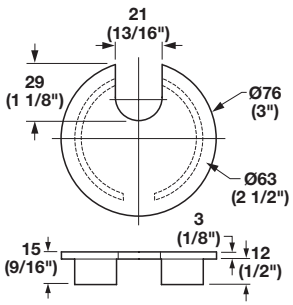

> For press-fitting or gluing in Ø63 mm (2 1/2") holes
> Opening: 21 x 29 mm (13/16" x 1 1/8")
> Material: Zinc die-cast, plated or epoxy-coated

Finish	Item No.
chrome polished	429.94.258
brass polished	429.94.856
antique copper	429.94.151
black epoxy	429.94.346
brushed bronze	429.94.061
brushed nickel	429.94.658
matt nickel	429.94.448

→ Two-piece, round

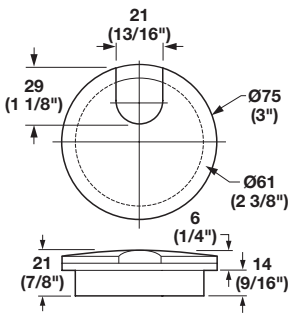

> For press-fitting or gluing in Ø61 mm (2 3/8") holes
> Opening: 21 x 29 mm (13/16" x 1 1/8")
> Material: Zinc die-cast, plated or epoxy-coated

Finish	Item No.
black epoxy	631.46.302
matt nickel	631.46.602
polished brass	631.46.802

Dimensional data not binding. Dimensions in mm, inches are approximate. We reserve the right to alter specifications without notice.

Grommets

→ Dually Grommet

Trim grommet to size

Problem:
Ragged and unsightly

Solution:
A professional finish

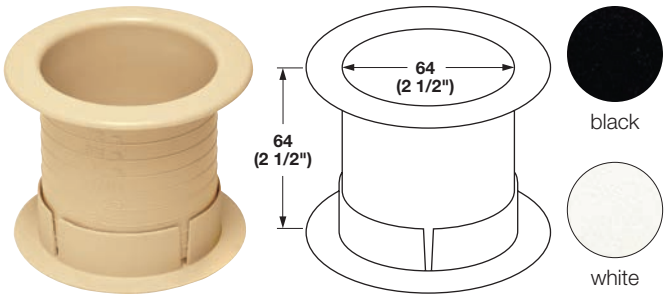

> Dual-sided locking grommet: gluing is not required
> Top panel thickness: 19–64 mm (3/4"-2 1/2")
> Cut to thickness required in 6 mm (1/4") increments with utility knife or scissors
> Ø64 mm (2 1/2") hole required
> Material: Plastic

Color	Item No.
black	631.24.340
white	631.24.740

→ Two-piece round

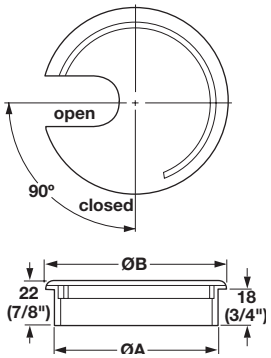

> With 90° rotating top
> Material: Plastic

Color	ØA	ØB	Item No.
black	60 (2 3/8")	70 (2 3/4")	631.26.301
silver	60 (2 3/8")	70 (2 3/4")	631.26.901
black	80 (3 1/8")	88 (3 7/16")	631.26.302
silver	80 (3 1/8")	88 (3 7/16")	631.26.902

→ Flexi-Top

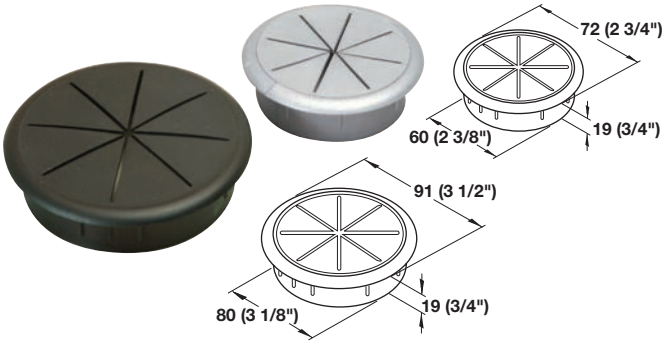

> Flexi-Top offers a unique look to any desk or counter
> Flexible top allows easy entry of multiple cables from any direction
> One-piece construction
> 2 sizes requiring a Ø60 or Ø80 mm (2 3/8" or 3 1/8") hole
> Material: Plastic

Color	Ø60 (2 3/8")	Ø80 (3 1/8")
black	631.43.302	631.43.304
silver	631.43.902	-

→ Grommet with Brush

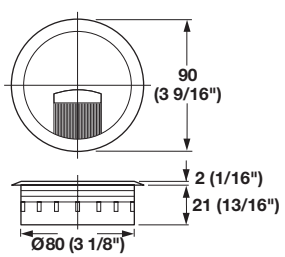

> Material: Plastic

Color	Item No.
stainless steel color	631.35.014
silver/aluminum RAL 9006	631.35.214
black	631.35.314

Dimensional data not binding. Dimensions in mm, inches are approximate. We reserve the right to alter specifications without notice.

Grommets

→ Oval Grommet

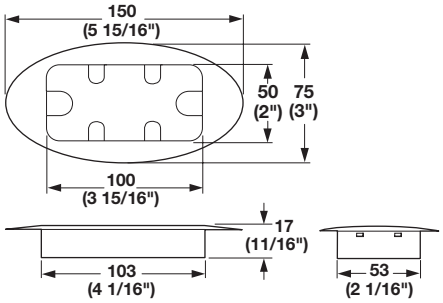

> With removable cover for large plugs
> Material: Plastic

Color	Item No.
black	631.24.310

→ Rectangular Grommet

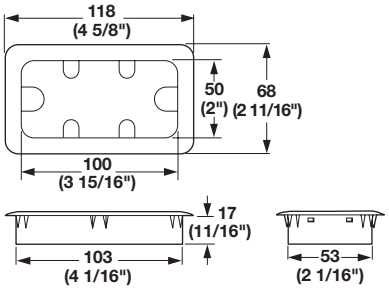

> With removable cover for large plugs
> Material: Plastic

Color	Item No.
black	631.24.300

Dimensional data not binding. Dimensions in mm, inches are approximate. We reserve the right to alter specifications without notice.

Anodized Aluminum Grommets with Brush

→ Square

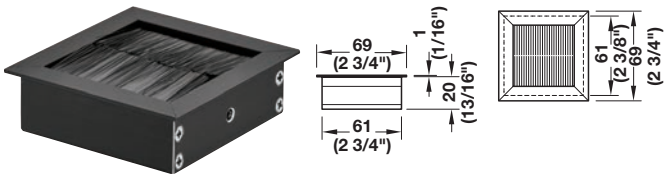

> One-piece with brush seal
> Screw mounted, corner radius R4
> W x D: 69 x 69 mm (2 3/4" x 2 3/4")
> Material: Aluminum

Finish	Item No.
black	631.29.340
silver	631.29.540

→ Rectangular

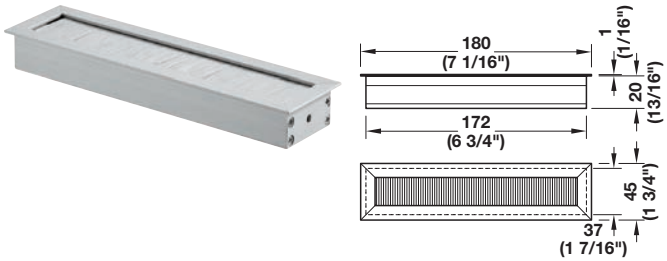

> One-piece with brush seal
> Screw mounted, corner radius R4
> W x D: 180 x 45 mm (7 1/2" x 1 3/4")
> Material: Aluminum

Finish	Item No.
black	631.29.341
silver	631.29.541

→ Rectangular with Lid

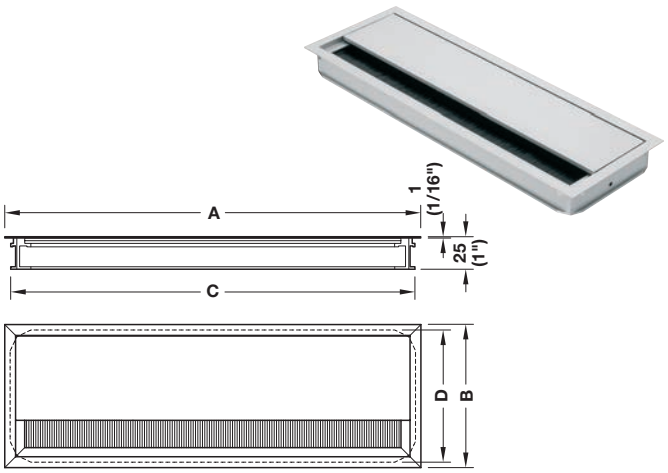

> With smooth closing mechanism
> One-piece with brush seal
> Screw mounted, corner radius R14
> Material: Aluminum

A	B	C	D	Finish	Item No.
320 (12 5/8")	110 (4 1/4")	311 (12 1/4")	102 (4")	black	631.29.301
				silver	631.29.901
240 (9 1/2")	120 (4 3/4")	231 (9 1/8")	113 (4 1/2")	black	631.29.312
				silver	631.29.912
450 (17 3/4")	120 (4 3/4")	441 (17 3/8")	113 (4 1/2")	black	631.29.313
				silver	631.29.913

→ Cable Slot with Brush

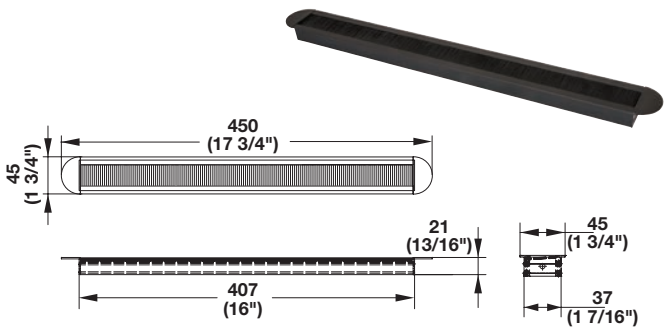

> One-piece with brush seal
> Screw mounted
> W x D: 450 x 45 mm (17 3/4" x 1 3/4")
> Material: Aluminum

Finish	Item No.
black	631.29.350
silver	631.29.950

Dimensional data not binding. Dimensions in mm, inches are approximate. We reserve the right to alter specifications without notice.

Grommets

→ Cable Outlet, round

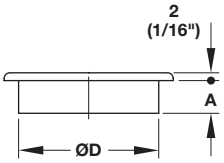

> Small, simple metal grommets
> Ideal for routing cables through side panels, holding small tools, vents, etc.
> For press-fitting in hole
> Material: Brass; Finish: nickel-plated

D	A	Item No.
12 (1/2")	15 (5/8")	631.02.702
20 (13/16")	15 (5/8")	631.02.700
35 (1 3/8")	19 (3/4")	631.02.701

→ Waste Management Liner

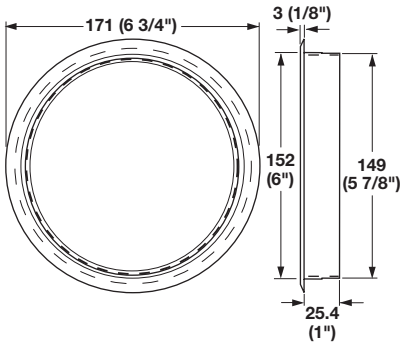

> For press fitting into 152 mm (6") hole
> Material: Plastic

Color	Item No.
black	631.24.320

Dimensional data not binding. Dimensions in mm, inches are approximate. We reserve the right to alter specifications without notice.

Grommets

→ Round Trash Rings

> Satin finish with bright polished flange top
> Flange height: 9 mm (3/8")
> Material: 304 Stainless Steel

Diameter	Height		Item No.
151 (6")	51 (2")	A	631.24.090
151 (6")	127 (5")	B	631.24.091
202 (8")	51 (2")	C	631.24.092
252 (10")	51 (2")	D	631.24.093
303 (12")	51 (2")	E	631.24.094

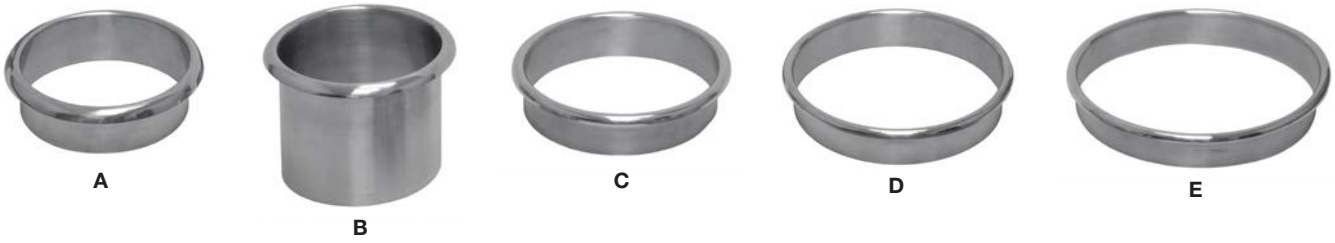

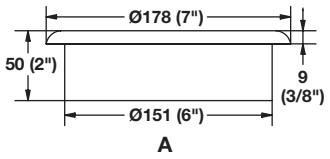

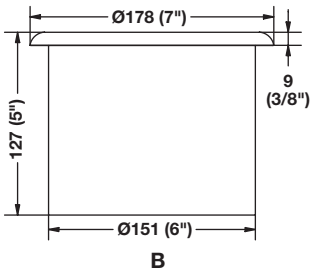

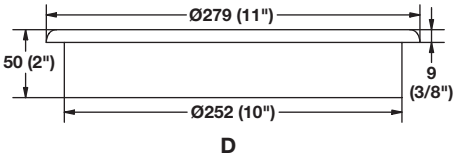

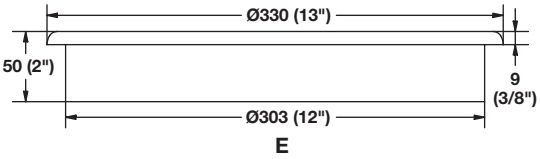

Dimensional data not binding. Dimensions in mm, inches are approximate. We reserve the right to alter specifications without notice.

This page is left blank intentionally.

Dimensional data not binding. Dimensions in mm, inches are approximate. We reserve the right to alter specifications without notice.

Grommets

→ Utility Grommets

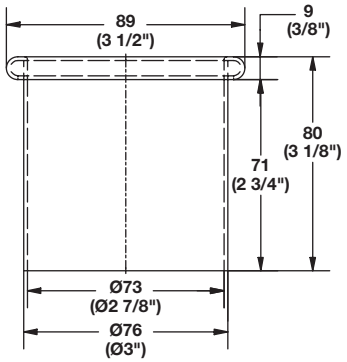

> Use for curling irons, hair dryers, tools, etc.
> High quality steel inside and out
> Material: Steel; Finish: chrome-plated

Ø x Height	Item No.
76 x 80 (3" x 3 1/8") - open bottom	520.99.200
38 x 131 (1 1/2" x 5 1/4") - open bottom	520.99.210
38 x 145 (1 1/2" x 5 3/4") - crimped bottom	520.99.220
51 x 131 (2" x 5 1/4") - open bottom	520.99.211
51 x 145 (2" x 5 3/4") - crimped bottom	520.99.221

Note
Wall mounted holder, see next page.

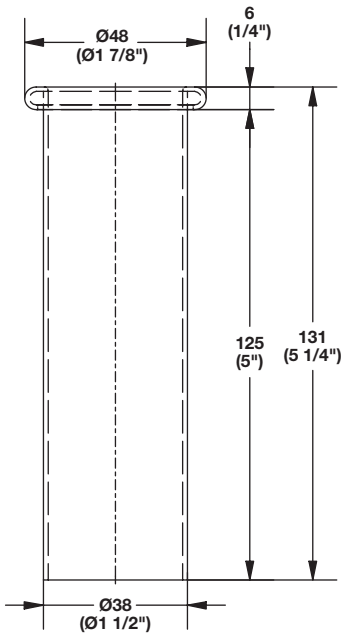

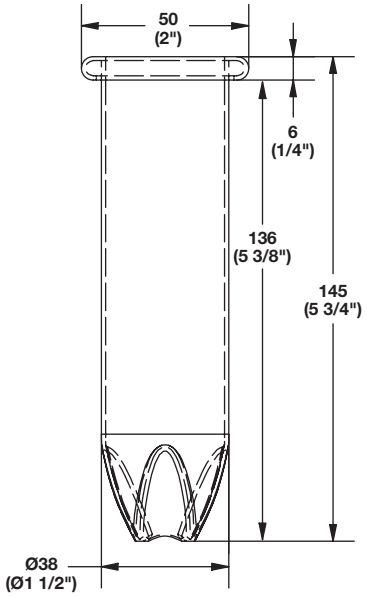

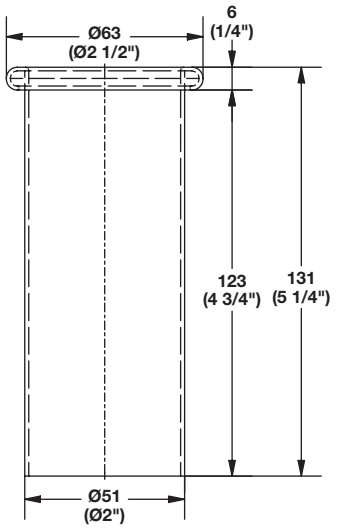

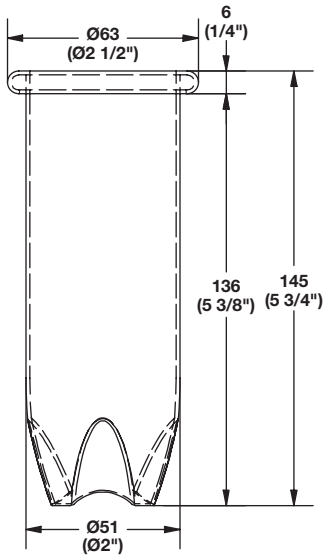

Dimensional data not binding. Dimensions in mm, inches are approximate. We reserve the right to alter specifications without notice.

Grommets

→ Premium Utility Grommets

> With removable bottom cap
  - Converts to an open bottom unit if needed
  - Removable for cleaning
> Use for curling irons, hair dryers, tools, etc.
> Manufactured with high-quality 430 Stainless Steel
> Material: Stainless Steel

Diameter	Item No.
51 (2")	520.99.040
76 (3")	520.99.041

520.99.040

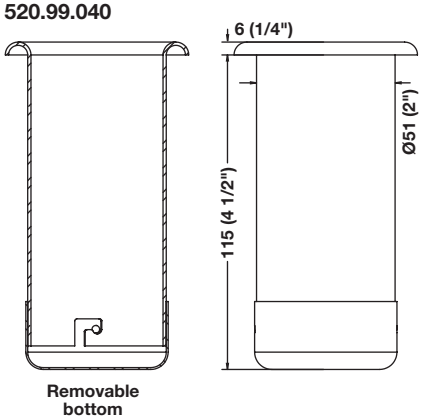

520.99.041

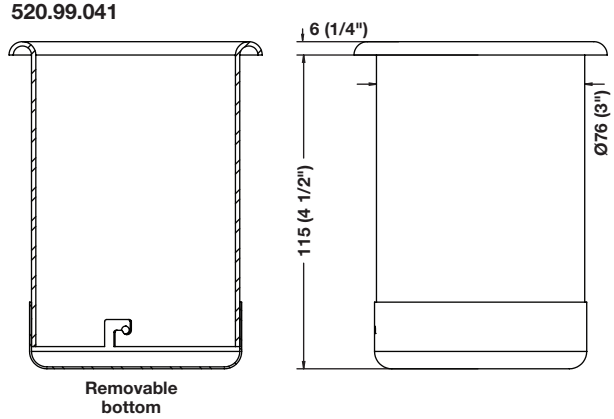

→ Wall Mounted Holder

> Holds 1 each; Ø38 (1 1/2"), Ø51 (2") and Ø76 (3") utility grommets
> Screw mounted
> Material: Steel

Finish	Item No.
chrome-plated	520.99.230

Note
For utility grommets above and on previous page.

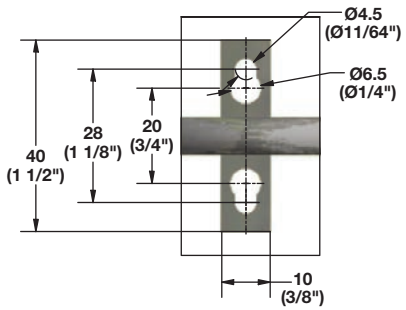

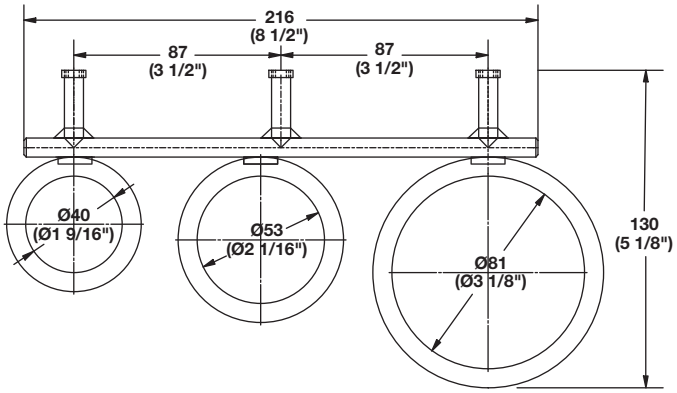

Dimensional data not binding. Dimensions in mm, inches are approximate. We reserve the right to alter specifications without notice.

Utility Containers

→ Storage Containers

> Round Bain Marie storage containers available in 1.25 and 2 quart sizes
> Rectangular storage pan
> Use for general storage of items in kitchen or vanity applications
> Material: Stainless Steel

Description	Finish	Item No.
Round 1.25 quart pot	mirror	520.98.000
Round 2 quart pot	mirror	520.98.001
Rectangular pan	matt	520.98.010

520.98.010

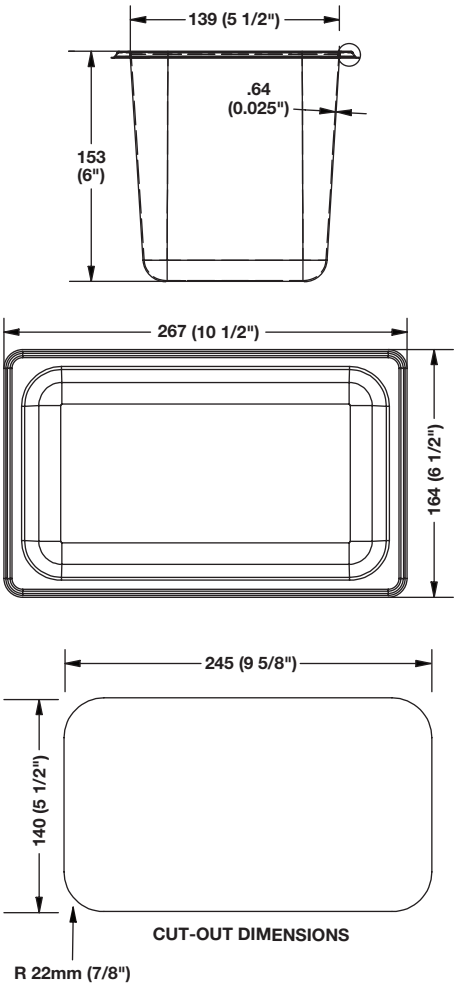

520.98.000

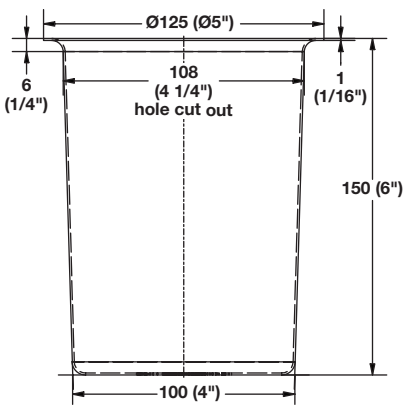

520.98.001

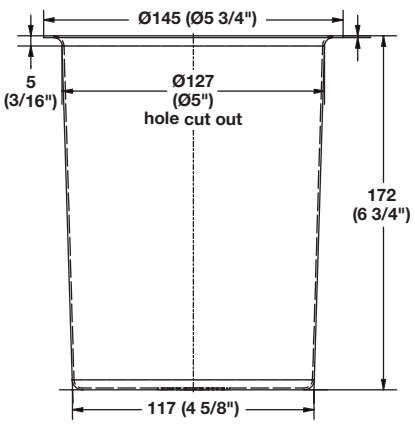

Dimensional data not binding. Dimensions in mm, inches are approximate. We reserve the right to alter specifications without notice.

This page is left blank intentionally.

Dimensional data not binding. Dimensions in mm, inches are approximate. We reserve the right to alter specifications without notice.

Cable Trunking/Grip

> Apply behind desks, along modesty panels, along baseboards, etc.

→ Wiremaster Cable Trunking

> With self adhesive tape
> Provides efficient cable concealment
> Can be cut to length
> Material: Plastic PVC, adhesive tape; Color: black

	Item No.
Wiremaster	829.15.302
Wiremaster - mini	829.15.303
Wiremaster - latch duct	829.15.304

Wiremaster

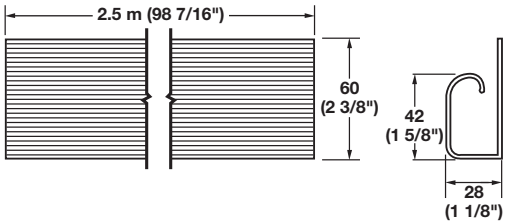

Wiremaster - mini

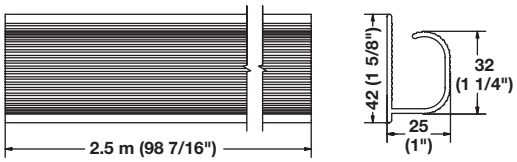

Wiremaster - latch duct

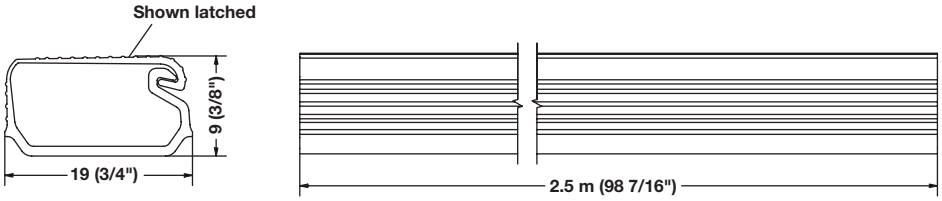

→ Cable Grip

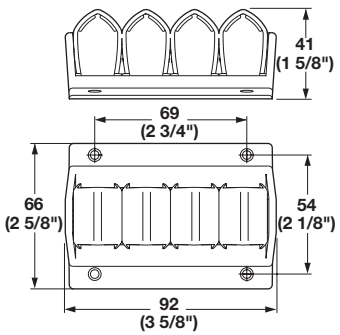

> Cables are securely gripped when inserted between loops
> Screw mounted
> Material: Plastic

Color	Item No.
black	631.39.310

Dimensional data not binding. Dimensions in mm, inches are approximate. We reserve the right to alter specifications without notice.

Cable Managers

> These flexible cable management systems are attractively designed and protect the cables from floor to desktop
> An ideal solution for use with adjustable table mechanisms
> The length/height is easily adjusted by removing individual discs as required

→ Vertebra Round Vertical System

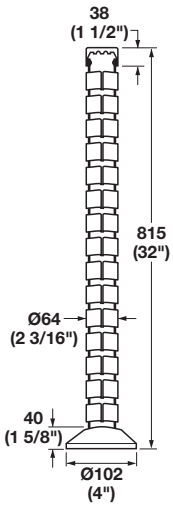

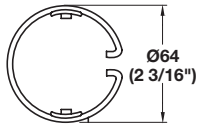

Cable management disc

> With weighted base and table attachment element
> Material: Plastic; Base: Metal

Color	Item No.
black	631.01.300
silver RAL 9006	631.01.900

Supplied With
Mounting screws

→ Vertical Wire-Guide®

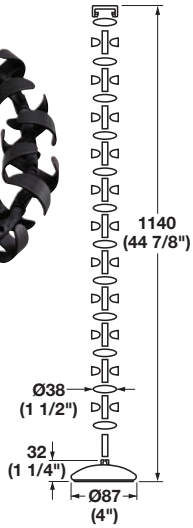

> With weighted base
> Material: Plastic; Base: Metal

Color	Item No.
black	631.18.301

Supplied With
Fastening clips
Screws

Dimensional data not binding. Dimensions in mm, inches are approximate. We reserve the right to alter specifications without notice.

Wire Guides and Power Bar

→ Cable Guide

> Flexible, for use with different table heights, especially height adjustable tables
> With weighted base
> Screw mounted under table
> Table height: max. 1200 mm (47")
> Material: Plastic

Color	Item No.
black	631.20.310
silver colored	631.20.910
white	631.20.710

→ Power Bar with Spiral Expandable Cord

> Ideal for use with Adjustable Table Systems
> With 6 tamper resistant grounded AC outlets
> Overload protection with reset switch
> Rating: 125V, 60Hz, 15A
> Screw mounted
> Cord length: Relaxed: 5'; Fully extended: 10'
> Material: Plastic

Color	Item No.
black	822.09.340

Dimensional data not binding. Dimensions in mm, inches are approximate. We reserve the right to alter specifications without notice.

Wire Management

→ Wire Management Tray

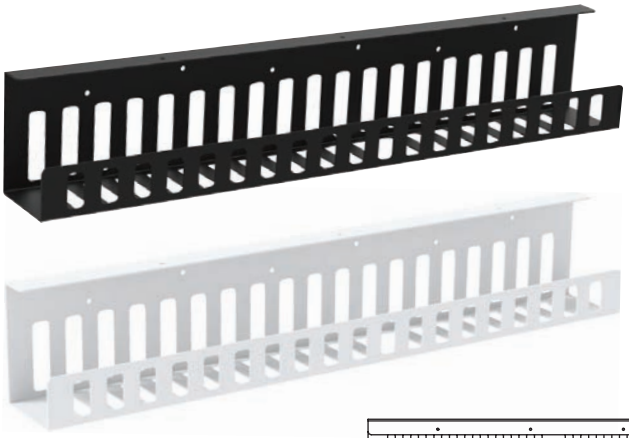

> Use under work surfaces to manage wires
> Solid yet lightweight aluminum construction
> Includes larger entry/exit holes evenly spaced for larger plugs
> Screw mounted
> Material: Aluminum

Length	Color	Item No.
508 (20")	black	631.03.340
508 (20")	white	631.03.740
1118 (44")	black	631.03.341
1118 (44")	white	631.03.741

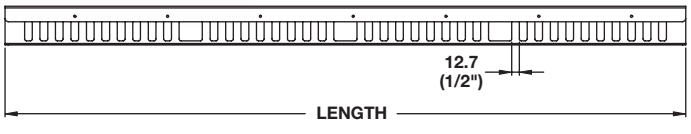

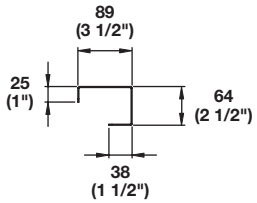

→ Double-Deck Wire Management Reel

> Use under work surfaces to manage wires
> Double deck reel to separate cords
> Screw mounted
> Material: TPR-Thermo Plastic Rubber

Color	Item No.
black	631.39.320
white	631.39.720

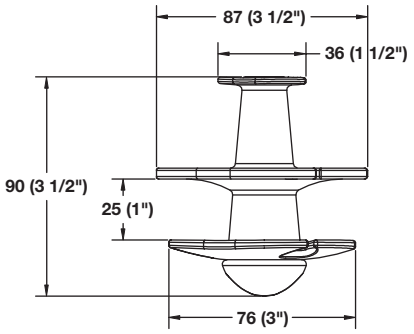

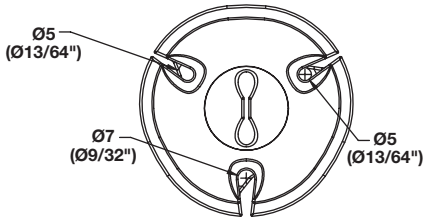

Dimensional data not binding. Dimensions in mm, inches are approximate. We reserve the right to alter specifications without notice.

File Frame Kit

> Inside drawer height of 222 mm (8 3/4") is required
> Smooth surface allows files to glide with ease
> Rigid profile handles heavy loads
> Adjusts between filing configurations without tools
> Cross rails “snap” into fixed positions
> Cut-to-size side rails allow you to customize any drawer
> Two or more kits may be combined for use in wide lateral file drawers

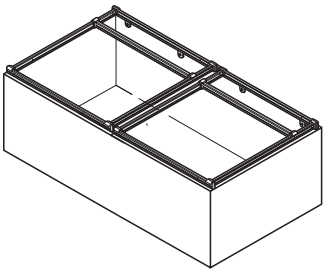

→ Frame for Wood or Metal Drawers

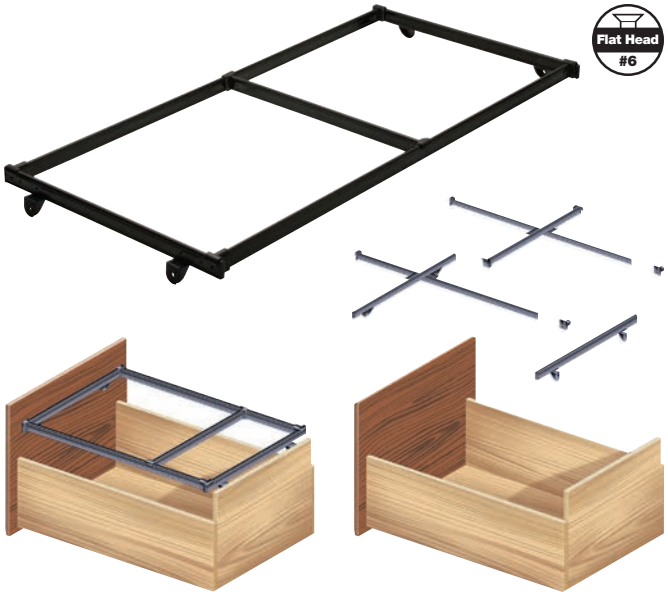

> Letter width file drawer requirements:
  Inside width greater than 305 mm (12");
  Inside depth less than 584 mm (23")
> Legal width file drawer requirements:
  Inside width greater than 381 mm (15");
  Inside depth less than 584 mm (23")
> Material: Profile: Steel; Ends: Plastic; Color: black

Width	Item No.
Letter	422.74.310
Legal	422.74.320

Supplied With 2 Fixed front rails, 2 cut-to-size side rails (25" long), 2 Attachment brackets, Divider

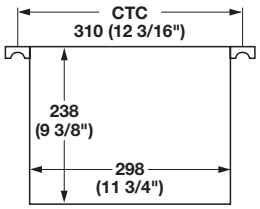

Typical LETTER file dimensions

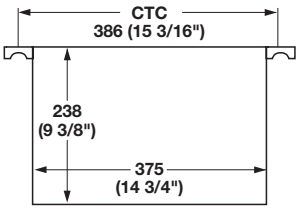

Typical LEGAL file dimensions

→ Depending on your drawer size, the following file configurations may be possible

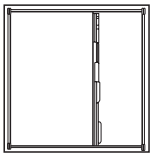
Side to Side Legal

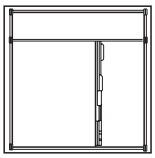
Side to Side Letter

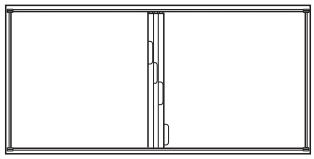
Side to Side Legal

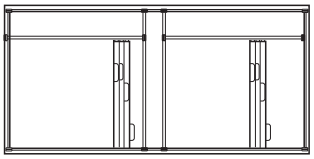
Side to Side Letter

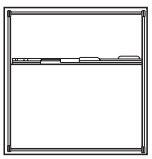
Front to Back Legal

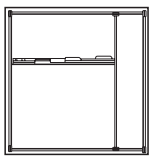
Front to Back Letter

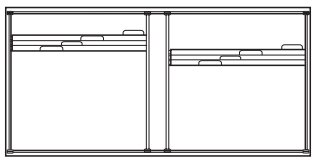
Front to Back Legal

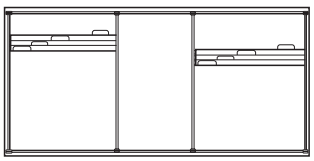
Front to Back Letter

Flat head screws pages 12.7-12.8, 12.10, 12.13

Dimensional data not binding. Dimensions in mm, inches are approximate. We reserve the right to alter specifications without notice.

> Simple, flexible solution for mounting into any file drawer
> No cutting or grooving required to install
> Flush mount or top mount to drawer side, front, or back
> Accepts 3 mm (1/8") file bar

→ Bracket

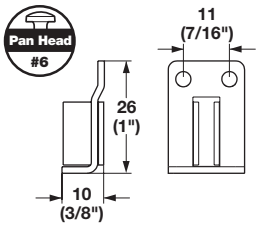

> Flush mount; screw mounted
> Material: Steel, 16 gauge

Finish	Item No.
zinc-plated	424.31.900
black oxide	424.31.300

→ Bracket

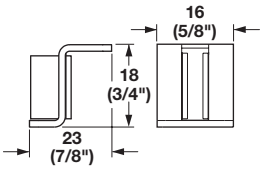

> Top mount; screw mounted
> Material: Steel, 16 gauge

Finish	Item No.
zinc-plated	424.31.910
black oxide	424.31.310

→ Cross Rail

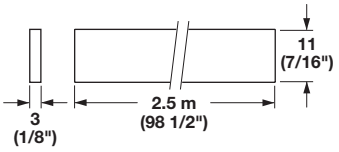

> Fits in brackets above
> Easily cut to length for your application
> Material: Aluminum, unfinished

	Item No.
	422.74.900

→ Rail

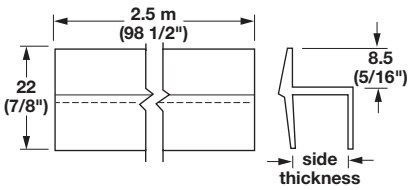

> Snaps onto drawer sides, requiring no glue or staples
> Add clips and cross rails to accommodate different sized drawers and file sizes
> Length: 2.5 m (98 1/2")
> Material: Plastic

Color	Side thickness	Item No.
black	12 (1/2")	422.72.381
white	12 (1/2")	422.73.790
black	16 (5/8")	422.72.392
white	16 (5/8")	422.73.792

→ Rail Clip

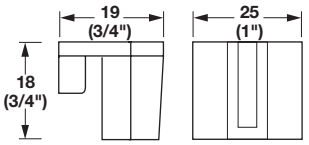

> Hangs over file rail (above), allowing files to be hung at 90° angle to rails
> Material: Plastic

Color	Item No.
black	422.73.300

Supplied With 10 pcs.

→ Aluminum Rail

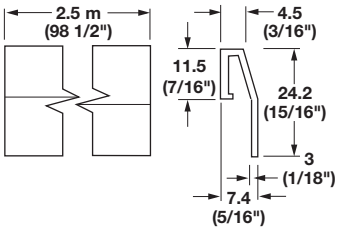

> Without holes; drill holes where needed
> Length: 2.5 m (98 1/2")
> Material: Aluminum, anodized

Finish	Item No.
satin silver	422.71.902

Pan head screws pages 12.9-12.10

Dimensional data not binding. Dimensions in mm, inches are approximate. We reserve the right to alter specifications without notice.

Turntables

> 360° rotation
> Quantity of through holes and non-skid pads depends on model
> Pads can be removed and drilled through if positive attachment is necessary
> Through holes are countersunk with Ø4.5 mm (3/16") screws

→ Heavy Duty Turntables

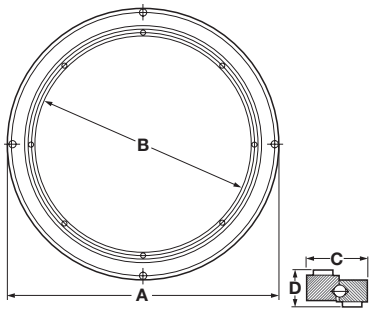

> For high quality applications
> Rotates 360° on steel ball bearings
> Material: Aluminum

A Outer Ø	B Inner Ø	C Width	D Height	Weight capacity	Holes inner	Pads inner	Holes outer	Pads outer	Item No.
325 (12 3/4")	256 (10 1/16")	30 (1 3/16")	15 (9/16")	80 kg (175 lbs.)	6	0	0	6	646.20.023
442 (17 1/2")	380 (15")	31 (1 1/4")	20 (13/16")	125 kg (275 lbs.)	6	6	0	8	646.20.024
600 (23 5/8")	520 (20 1/2")	40 (1 9/16")	22 (7/8")	250 kg (550 lbs.)	4	8	0	10	646.20.025
750 (29 5/8")	670 (26 3/8")	40 (1 9/16")	22 (7/8")	400 kg (880 lbs.)	5	10	0	13	646.20.026

→ Heavy Duty Turntable

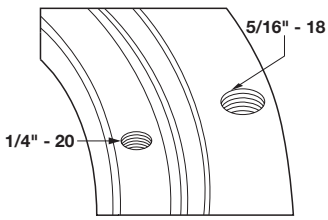

> With threaded inner and outer through holes for “bolting down” of turntable
> Material: Aluminum

Outer Ø	Inner Ø	Width	Height	Weight capacity	Holes inner	Pads inner	Holes outer	Pads outer	Item No.
325 (12 3/4")	265 (10 7/16")	30 (1 3/16")	15 (9/16")	80 kg (175 lbs.)	6 with 1/4"-20	0	6 with 5/6"-18	6 Separate	646.20.006

Dimensional data not binding. Dimensions in mm, inches are approximate. We reserve the right to alter specifications without notice.

Monitor Arms

- German engineered for quality and durability
- Smooth movement to easily change distance, angle or rotation
- Stabilis gas spring provides effortless movement
- Elevates the monitor above the work surface
- Quick-release connection for easy monitor relocation or upgrade
- Arm conceals behind the monitor and hides cables
- Meets VESA mounting standards for 75 mm (2 15/16") and 100 mm (3 15/16") monitor mounting
- 3-in-1 mount system; clamp, bolt-thru or grommet mounts
- Fits worksurfaces from 10–50 mm (3/8"–2") thick
- Material: Aluminum

→ CLU II for Single Monitors

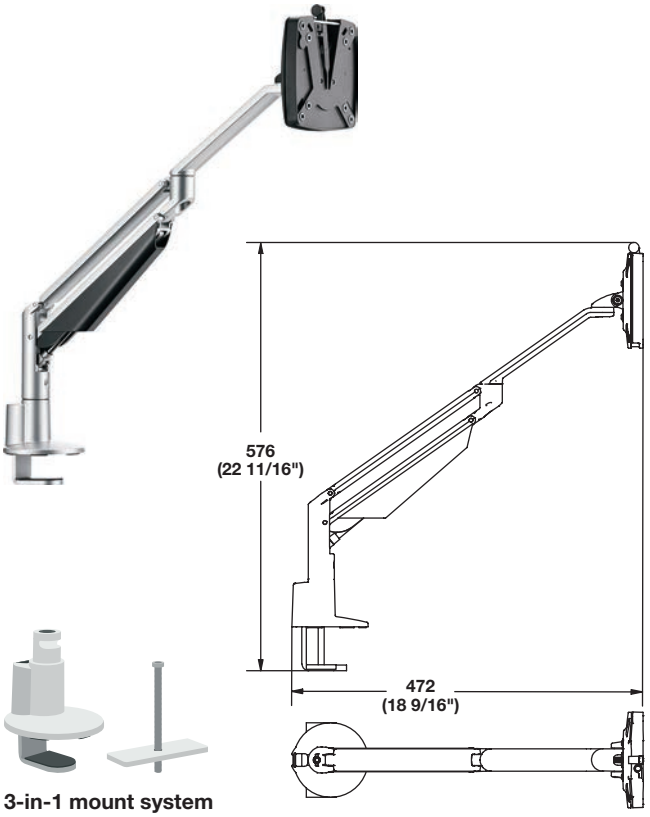

3-in-1 mount system

- Weight capacity: 2–7 kg (4.4–15.4 lbs.)

Finish	Item No.
black	818.45.300
silver	818.45.900

Supplied With
1 set

→ CLU Duo for Dual Monitors

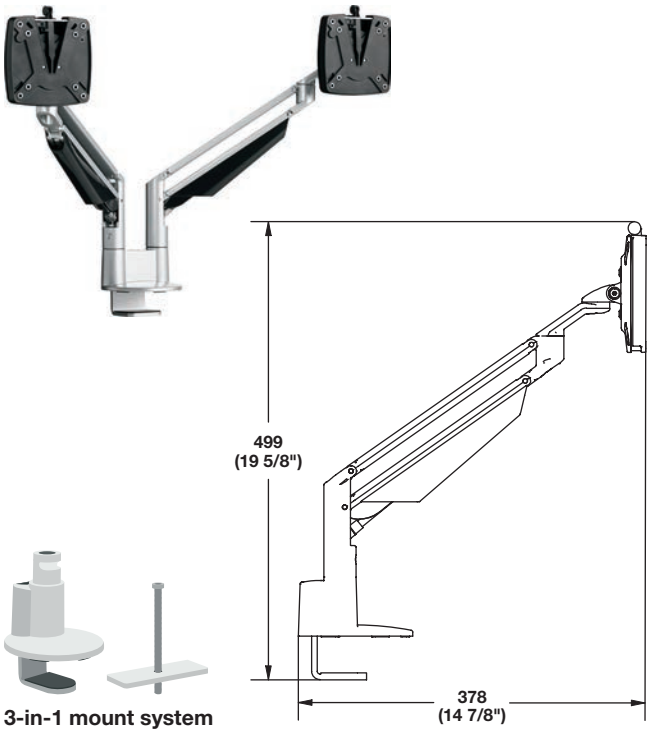

3-in-1 mount system

- Weight capacity for each arm: 2–7 kg (4.4–15.4 lbs.)

Finish	Item No.
black	818.45.310
silver	818.45.910

Supplied With
1 set

Dimensional data not binding. Dimensions in mm, inches are approximate. We reserve the right to alter specifications without notice.

Desktop Sit to Stand Workstation

- > Fully assembled for easy installation
- > The compact footprint easily fits onto a 610 mm (24") deep desk
- > Primary work surface is large enough to accommodate two x 610 mm (24") monitors
- > Large keyboard surface easily holds a keyboard and mouse
- > At full elevation primary work surface is positioned 508 mm (20") above desk
- > Weight capacity: 16 kg (35 lbs.)
- > The keyboard surface can be adjusted through 20° (-10+10)
- > Weight of less than 18 kg (40 lbs.) is light enough for one person to install
- > Side mounted paddles controlling gas assist height adjustment
- > Keyboard surface adjusts with the primary surface
- > Material: Frame: Steel; Work Surfaces: Phenolic

→ Volante

Finish	Item No.
black	633.44.000

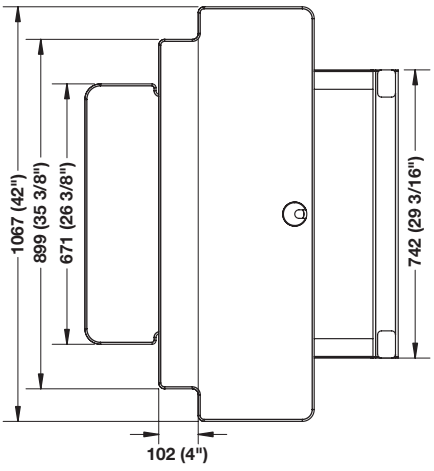

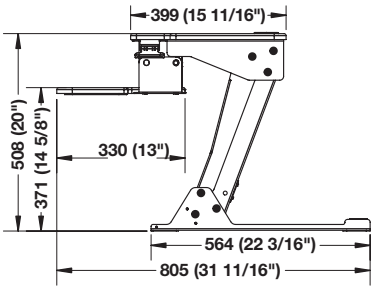

Top position

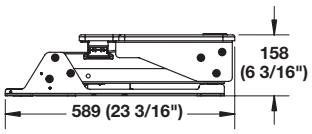

Bottom position

Dimensional data not binding. Dimensions in mm, inches are approximate. We reserve the right to alter specifications without notice.

Pencil Drawers

→ Pencil Drawer

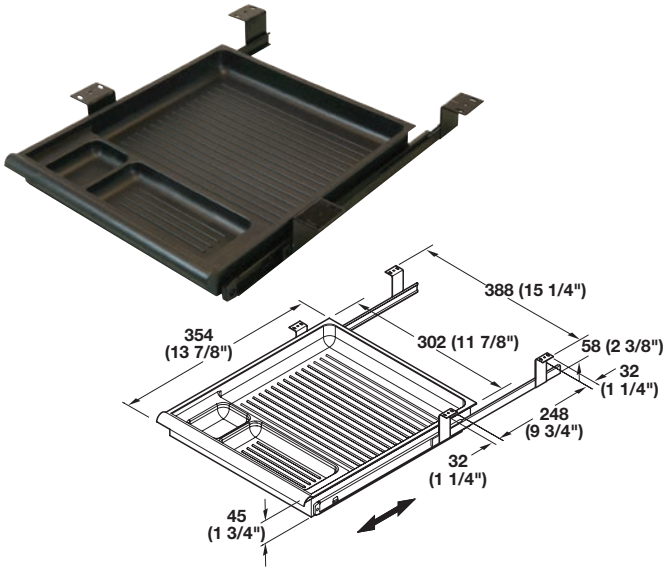

> 3 compartments
> Ball bearing slides with hold-in and hold-out detents
> Completely assembled
> Minimum width required for installation: 387 mm (15 1/4")
> Installed depth: 387 mm (15 1/4")
> Extended depth: 660 mm (26")
> Material: Tray: Plastic; Slides: Steel

Color	Item No.
black	429.59.340

Supplied With
Mounting hardware

→ Pencil Drawer

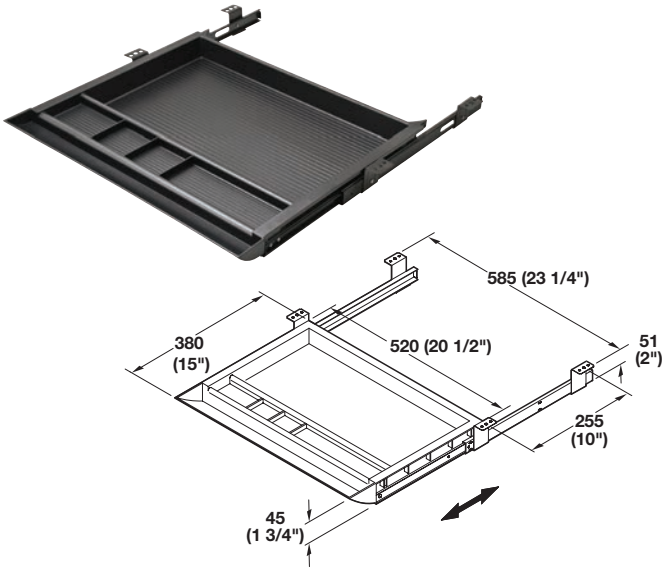

> 5 compartments
> With ball bearing slides
> Simple assembly required
> Minimum width required for installation: 591 mm (23 1/4")
> Installed depth: 463 mm (18 1/4")
> Extended depth: 737 mm (29")
> Material: Tray: Plastic; Slides: Steel

Color	Item No.
black	429.59.350

Supplied With
Mounting hardware

Dimensional data not binding. Dimensions in mm, inches are approximate. We reserve the right to alter specifications without notice.

Pencil Drawers

→ Desk Top Storage

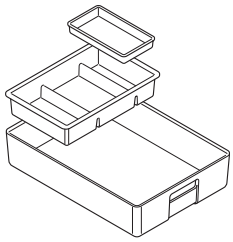

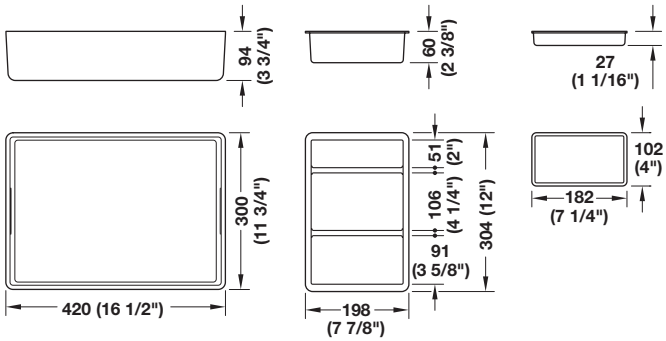

> For storing desk top tools; pens, scissors, staplers, etc.
> Large bin for storing paper and documents
> Handle allows for easy transport to other work areas
> Felt will not damage work surfaces
> Material: Polyester Felt

Drawer/Compartment	Item No.
dark gray/light gray	633.55.090

Supplied With
Large bin
Compartment system set

→ Pencil Drawers for Shallow Applications

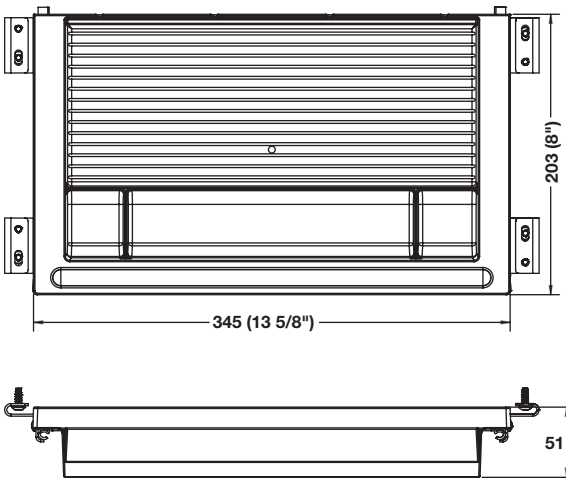

> Shallow 203 mm (8") depth is designed to fit underneath tables with a support beam, such as adjustable tables
> With ball bearing slides
> Has 4 compartments and a pencil slot
> Includes a tray that can slide across the drawer or can be removed and placed on the work surface to hold accessories or personal items
> With wire management slots in the back to holds cords for charging devices such as cell phones
> Material: Tray: Plastic; Slides: Steel; Finish: black

Color	Item No.
black	429.59.370
white	429.59.371
silver	429.59.372

Supplied with
1 kit

Dimensional data not binding. Dimensions in mm, inches are approximate. We reserve the right to alter specifications without notice.

This page is left blank intentionally.

Dimensional data not binding. Dimensions in mm, inches are approximate. We reserve the right to alter specifications without notice.

Keyboard Trays

→ Keyboard Tray

- > Adjustable keyboard clamp
- > Ball bearing slides with hold-in and hold-out detents
- > Sloped edge functions as a comfortable wrist rest
- > Installed depth: 420 mm (16 1/2")
- > Extended depth: 679 mm (26 3/4")
- > Width required for installation: min. 600 mm (24")
- > Weight capacity: 20 kg (44 lbs.)
- > Material: Tray and Brackets: Plastic; Color: black
  Slides: Steel; Finish: zinc-plated

Version	Item No.
Without mouse tray	632.65.300
With mouse tray	632.65.305

Supplied With
Mounting hardware

Note
Simple assembly is required.

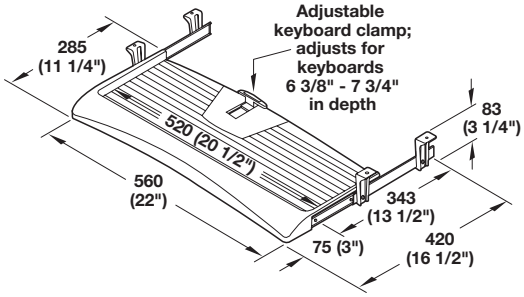

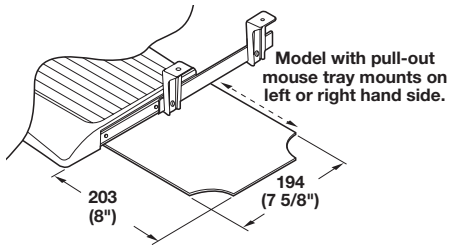

Dimensional data not binding. Dimensions in mm, inches are approximate. We reserve the right to alter specifications without notice.

Accuride Keyboard Trays

> For occasional users, home office, education, learning and training centers or heavy-use typing/data entry
> Sleek curvilinear look
> Slides are fully concealed, no rough or exposed edges
> Removable palm rest allows unit to accommodate virtually any size keyboard
> Extra wide tray design provides ample mousing surface
> Built-in cable management
> Removable mouse pad for right or left handed use
> Heavy duty adjustable brackets with 7 height adjustments
> Brackets can mount facing in or out
> Material: Steel, Foam, ABS Molded Plastic

→ Standard Keyboard System - Model 200

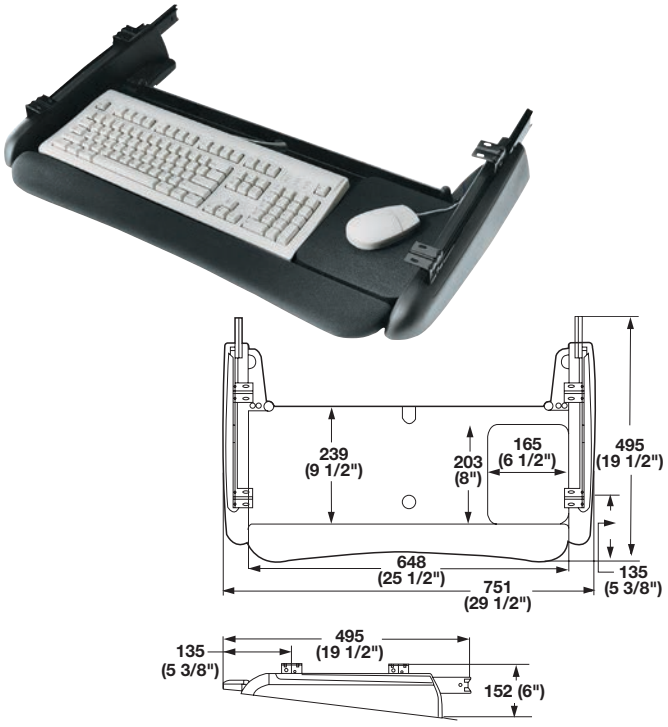

> 3/4 extension slides
> Tray tilt, fixed at -7°
> Detent in the open and closed position
> Weight capacity: 34 kg (75 lbs.)

Color	Item No.
black	632.52.300

Note
Keyboard and mouse not included.

→ Deluxe Keyboard System - Model 300

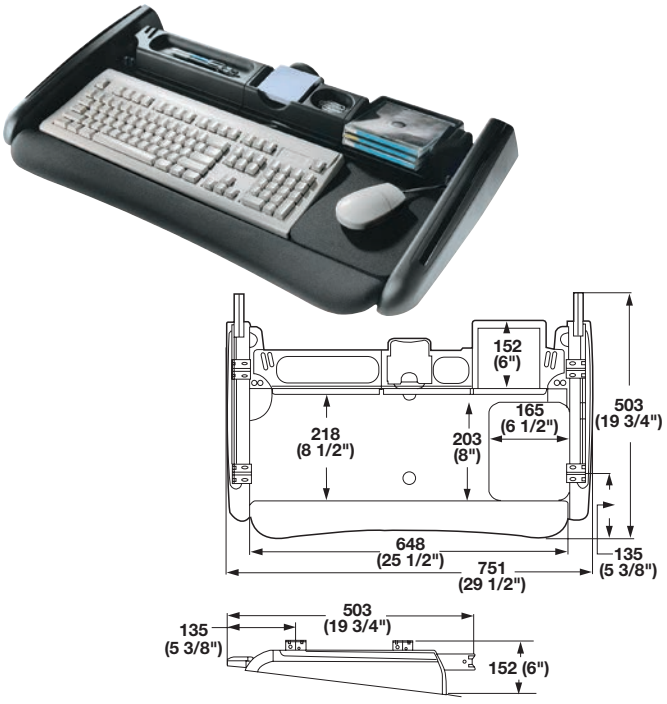

> Full extension slides
> Tray tilt, adjusts at - 7°, - 3.5° and flat (0°)
> Intermediate detent in open and closed position
> Rear storage compartments
> Weight capacity: 45 kg (100 lbs.)

Color	Item No.
black	632.52.310

Note
Keyboard and mouse not included.

Dimensional data not binding. Dimensions in mm, inches are approximate. We reserve the right to alter specifications without notice.

Keyboard Arm

→ Encore Arm

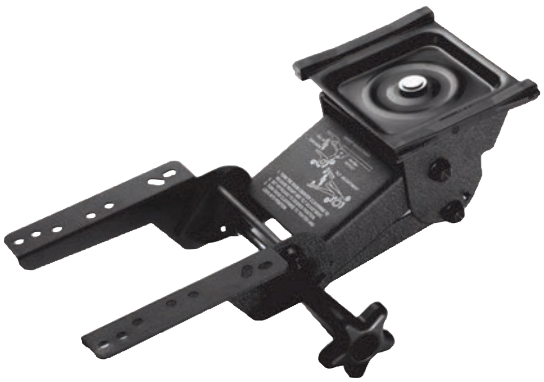

- > Entry level arm that provides most of the features at an economical price
- > For occasional users, home office, education, learning and training centers
- > Meets or exceeds ANSI/BIFMA requirements
- > Made in North America, TAA Compliant
- > Low profile design provides maximum leg room
- > Star wheel adjustment knob provides simultaneous height and tilt adjustment
- > 360° swivel allows user to move keyboard freely from side to side
- > Track length: 432 mm (17")
- > Material: Steel, epoxy-coated; Components: Plastic

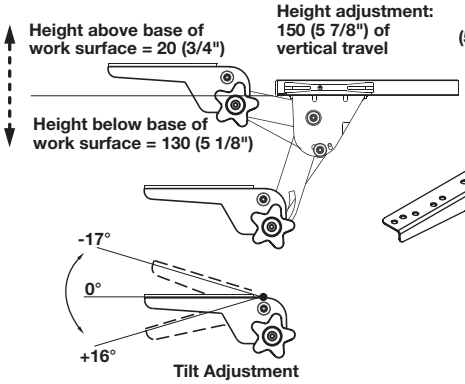

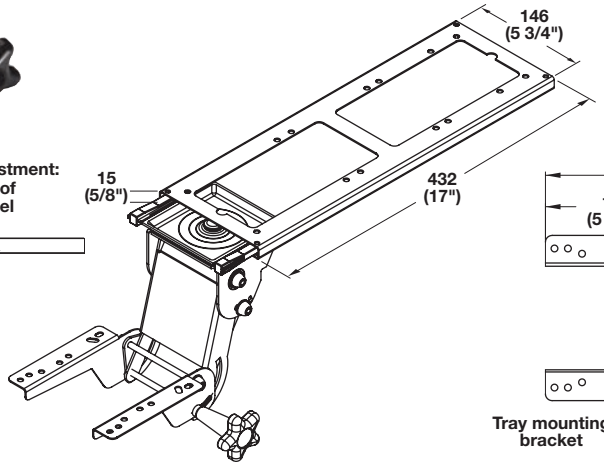

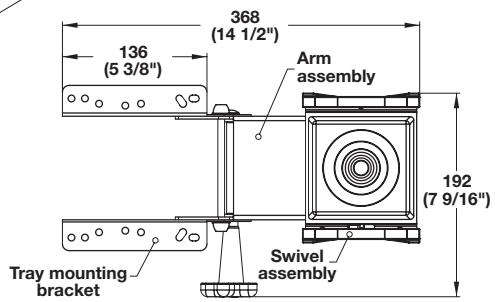

Finish	Item No.
black	632.68.380

Note
Arm does not include keyboard tray, please order separately, see below options.

→ Mix and Match Arms & Trays to suit your needs

	Arms	Page	Trays	Page
	Encore (good)	5.41	Economy (good)	5.44
	Echo (better)	5.42	Harmony (better)	5.44
	Ovation (best)	5.43	HDPE (best)	5.45

Dimensional data not binding. Dimensions in mm, inches are approximate. We reserve the right to alter specifications without notice.

Keyboard Arm

> A no-frills keyboard support arm that offers all the adjustability needed for comfort and efficiency
> For occasional users, home office, education, learning and training centers
> Meets or exceeds ANSI/BIFMA requirements
> Made in North America, TAA Compliant
> Soft touch knob adjusts both height and tilt simultaneously
> Spring assisted to help counterbalance keyboard tray weight
> 360º swivel allows user to move keyboard freely from side to side
> Low profile ball bearing track
> Track length: 432 mm (17")
> Material: Steel, epoxy-coated; Components: Plastic

→ Echo Arm

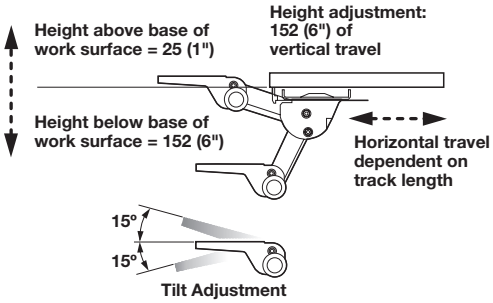

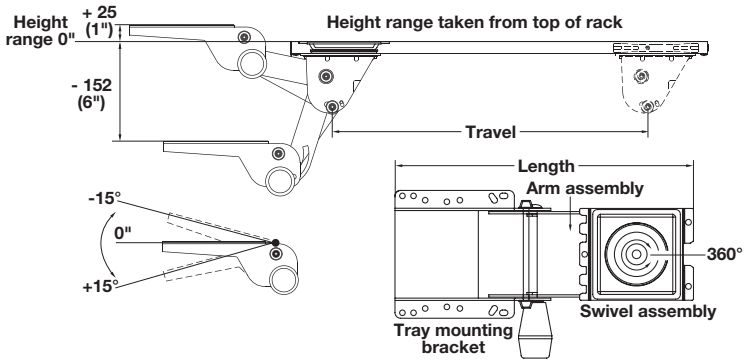

Finish	Item No.
black	632.68.301

Note
Arm does not include keyboard tray, please order separately, see below options.

→ Mix and Match Arms & Trays to suit your needs

	Arms	Page	Trays	Page
	Encore (good)	5.41	Economy (good)	5.44
	Echo (better)	5.42	Harmony (better)	5.44
	Ovation (best)	5.43	HDPE (best)	5.45

Dimensional data not binding. Dimensions in mm, inches are approximate. We reserve the right to alter specifications without notice.

Keyboard Arm

- > Designed to offer a greater range of motion with maximum use comfort and safety
- > For heavy use typing/data entry, multi users and commercial/ industrial installations
- > Gauges for both height and tilt adjustment make it easy for each user to custom fit the keyboard position to their personal preference
- > Lift-N-Lock™ spring – assisted height adjustment (no levers or knobs)
- > Meets or exceeds ANSI/BIFMA requirements
- > Made in North America, TAA compliant
- > Soft-touch dial knob for easy negative or positive tilt adjustment, +10°/-15°, provides greater ADA compliance
- > Tray tilt angle indicator
- > Under work surface storage and 360° swivel
- > Corner workstations, clears 45° corner angles
- > Track length: 552 mm (21 3/4")
- > Material: Steel

→ Ovation Arm

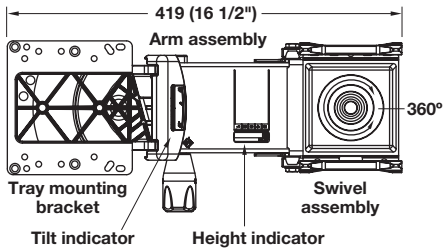

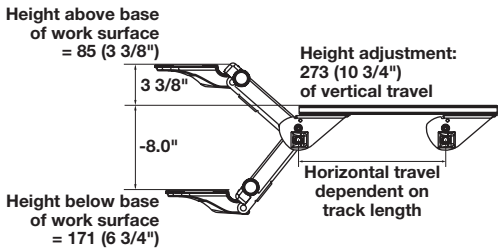

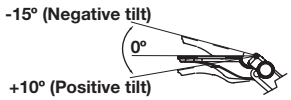

Finish	Item No.
black epoxy	632.68.385

Note
Arm does not include keyboard tray, please order separately, see below options.

→ Mix and Match Arms & Trays to suit your needs

	Arms	Page	Trays	Page
	Encore (good)	5.41	Economy (good)	5.44
	Echo (better)	5.42	Harmony (better)	5.44
	Ovation (best)	5.43	HDPE (best)	5.45

Dimensional data not binding. Dimensions in mm, inches are approximate. We reserve the right to alter specifications without notice.

Keyboard Trays

→ Economy Tray

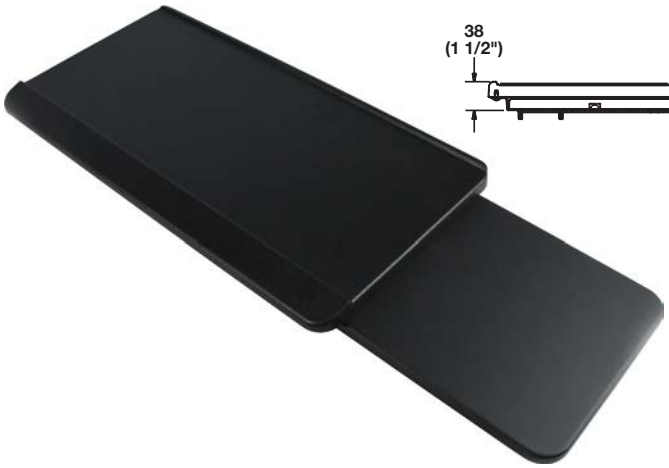

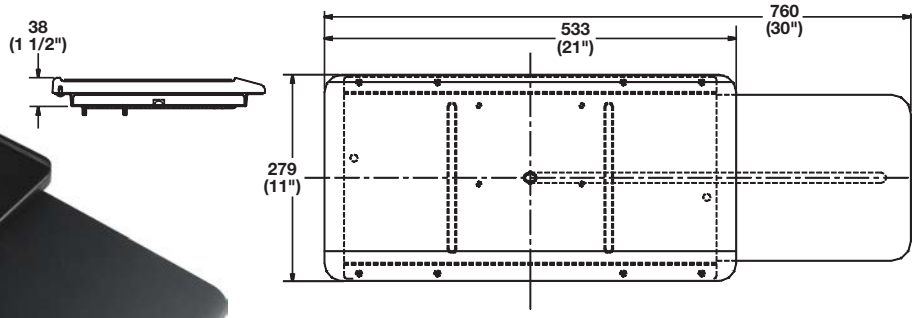

> Low profile and durable
> Integrated mouse tray slides for left or right hand use
> Material: Plastic, injection molded

Finish	Item No.
black	639.96.397

Note
Tray does not include keyboard arm, please order separately, see options on page **5.41, 5.42, 5.43**.

→ Harmony Tray

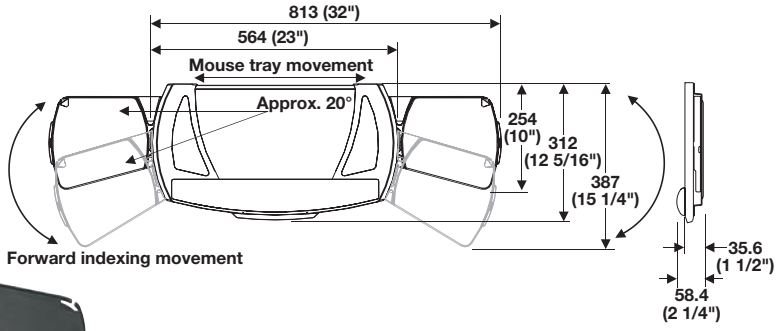

> Anti-skid pads prevent keyboard slippage
> Removable, snap-in 483 mm (19") gel-like foam wrist rest offers gentle support
> Mousing surface smoothly and easily adjusts from side to side for left or right-hand use, with three forward index positions, built-in cable manager and fence to prevent slippage
> Material: Plastic, injection molded

Finish	Item No.
black	632.68.395

Note
Tray does not include keyboard arm, please order separately, see options on page **5.41, 5.42, 5.43**.

Dimensional data not binding. Dimensions in mm, inches are approximate. We reserve the right to alter specifications without notice.

Keyboard Trays

→ HDPE Tray

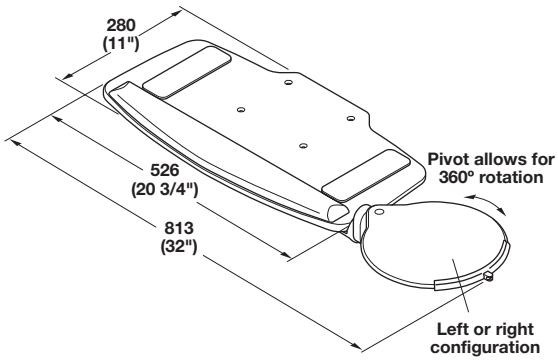

> HDPE (High Density Polyethylene) tray is fully recyclable
> Mouse tray with guard to prevent slippage of the mouse
> Mouse tray is height adjustable & swivels 360°
> Material: Arm Mechanism: Steel, epoxy-coated
Keyboard Tray: HDPE Plastic

Finish	Item No.
black	632.68.336

Supplied With
Tray
Mouse pad

Note
Tray does not include keyboard arm, please order separately, see below options.

→ Mix and Match Arms & Trays to suit your needs

	Arms	Page	Trays	Page
	Encore (good)	5.41	Economy (good)	5.44
	Echo (better)	5.42	Harmony (better)	5.44
	Ovation (best)	5.43	HDPE (best)	5.45

Dimensional data not binding. Dimensions in mm, inches are approximate. We reserve the right to alter specifications without notice.

Keyboard Trays and Arms

> Entry level arm and tray combo that provides economical price points
> 360° swivel
> 432 mm (17") track with 151 mm (6") height adjustment
> Material: Arm: Steel; Tray: ABS Plastic

→ Combo Pack

> Low profile arm with Lift-N-Lock™ leverless adjustment

Finish	Item No.
black	632.68.317

Supplied With
Economy tray with swivel mouse platform for left or right handed attachment.

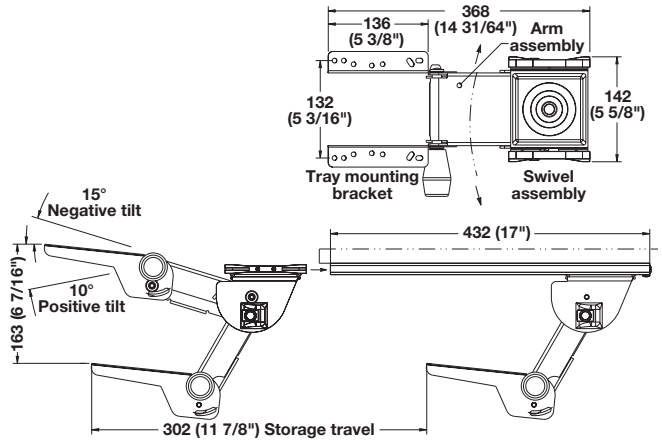

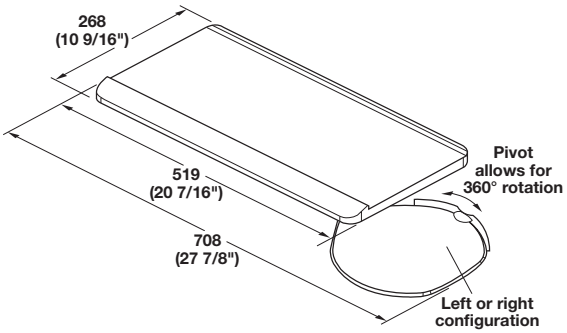

Dimensional data not binding. Dimensions in mm, inches are approximate. We reserve the right to alter specifications without notice.

Keyboard Trays and Arms

→ Combo Pack

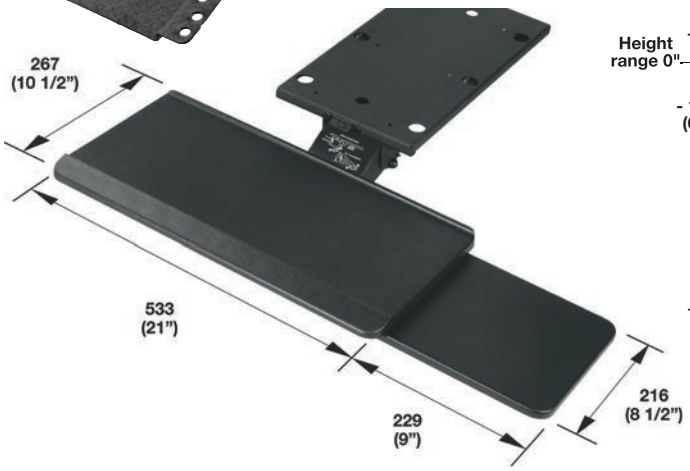

> Soft touch knob adjusts both height and tilt simultaneously
> Spring assisted to help counterbalance keyboard tray weight
> 360º swivel allows user to move keyboard freely from side to side
> Low profile ball bearing track
> Material: Arm: Steel, epoxy-coated
Tray: Plastic, injection molded; Color: black

Track length	Item No.
425 (16 3/4")	632.68.311
552 (21 3/4")	632.68.312

Supplied With
Economy tray with mouse tray for left or right hand use.

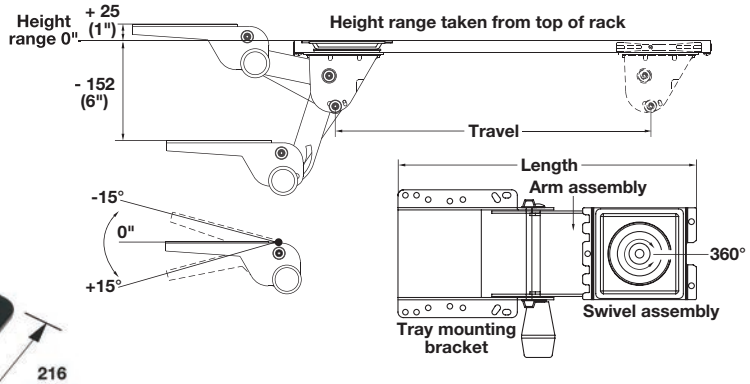

5

Office Organization

Dimensional data not binding. Dimensions in mm, inches are approximate. We reserve the right to alter specifications without notice.

Monitor Suspension System

> Keyboard allows for a mouse to be used next to keyboard
> The same technology as the standard systems but designed to accept flat screen computer monitors
> Designed to fit monitors with max. dimension: 467 x 432 mm (18 3/8" x 17")
> Minimum work surface depth: 610 mm (24")
> Weight capacity for monitor: 9.5 kg (21 lbs.)
> Material: Steel, epoxy powder-coated; Glass, tinted and tempered
Glare Shield and Trim Grommet: Plastic; Color: black

→ System for Flat Screen Monitors

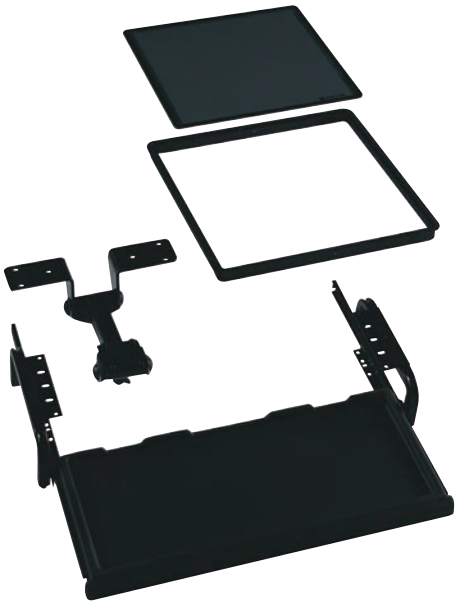

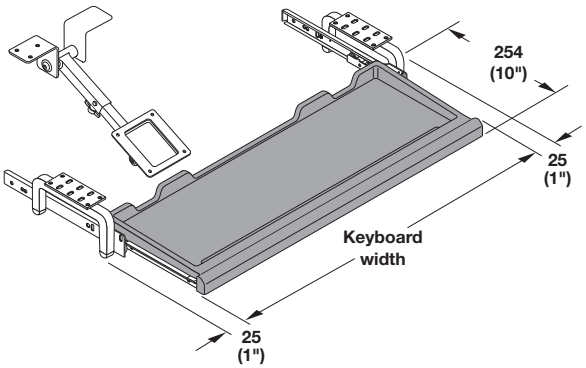

Keyboard tray width	Item No.
610 (24")	639.90.390
711 (28")	639.90.396

Supplied With
Flat panel arm, Keyboard tray with locking slides
Tinted and tempered glass (1/4" thick) viewing surface
Trim grommet 100 mm (4") VESA mounting plate
Mounting instructions

Note
Detailed cut-out dimensions and mounting instructions are included with each set.

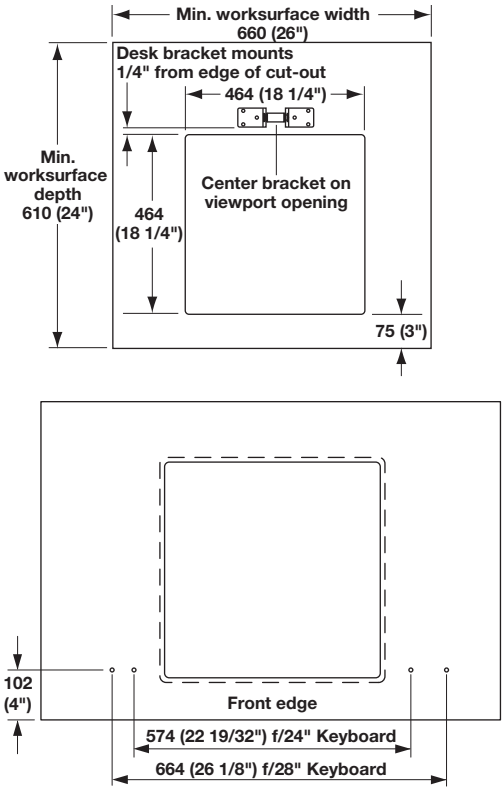

Accessories page 5.49

Dimensional data not binding. Dimensions in mm, inches are approximate. We reserve the right to alter specifications without notice.

Monitor Suspension System Accessories

→ Flat Panel Display Arm

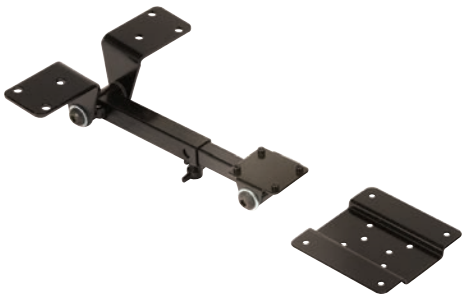

> Mounts underneath worksurface to support flat screen monitor on a tension-mounted arm
> Converts existing downview CRT monitor system to flat screen creating space below the worksurface
> Monitor attaches to flat panel arm with VESA compliant steel plate 100 mm (4")
> Weight capacity for monitor: 95 kg (21 lbs.)
> Arm length adjusts from: 133–214 mm (5 1/4"–8 7/16")
> Material: Steel

Finish	Item No.
black	639.91.378

→ Replacement Glass Viewport

> Tinted and tempered (standard) with T141 rating
> W x D x H: 457 x 457 x 6 mm (18" x 18" x 1/4")

	Item No.
	639.91.300

Note
Standard kits come complete with a viewport.

→ Replacement Trim Grommet

> W x D x H: 457 x 457 x 6 mm (18" x 18" x 1/4")
> Material: Plastic

	Item No.
	639.91.350

Dimensional data not binding. Dimensions in mm, inches are approximate. We reserve the right to alter specifications without notice.

CPU Holders

→ CPU Holders with Swivel and Extension

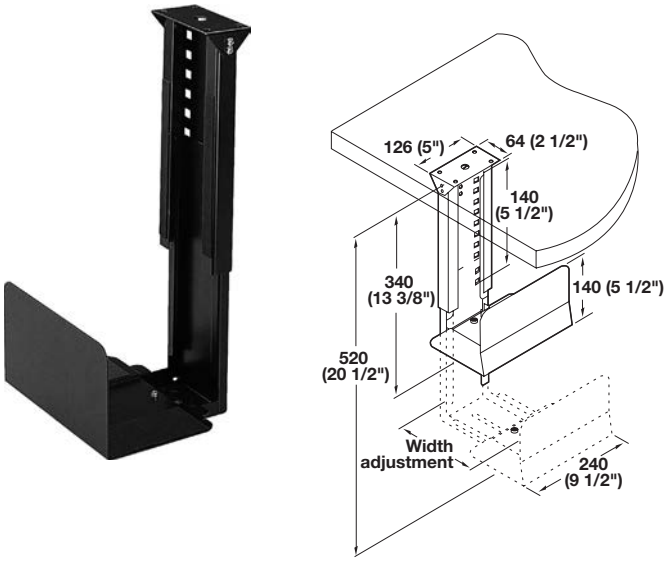

> Securely clamps and holds CPU up and away from floor
> Weight capacity: 25 kg (55 lbs.)
> Height adjustment: 340–521 mm (13 3/8"–20 1/2")
> Material: Steel; Finish: black epoxy

Width adjustment	Item No.
140–235 (5 1/2"–9 1/4")	639.72.300
70–133 (2 3/4"–5 1/4")	639.72.320

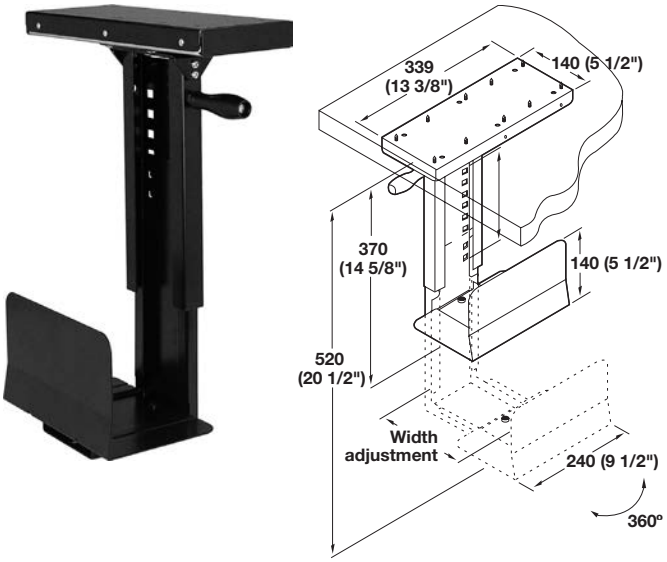

> 360° swivel provides easy access to connections on the rear of CPU
> Provides 216 mm (8 1/2") of travel
> Weight capacity: 25 kg (55 lbs.)
> Height adjustment: 371–521 mm (14 5/8"–20 1/2")
> Width adjustment: 140–235 mm (5 1/2"–9 1/4")
> Material: Steel

Finish	Item No.
black epoxy	639.72.310

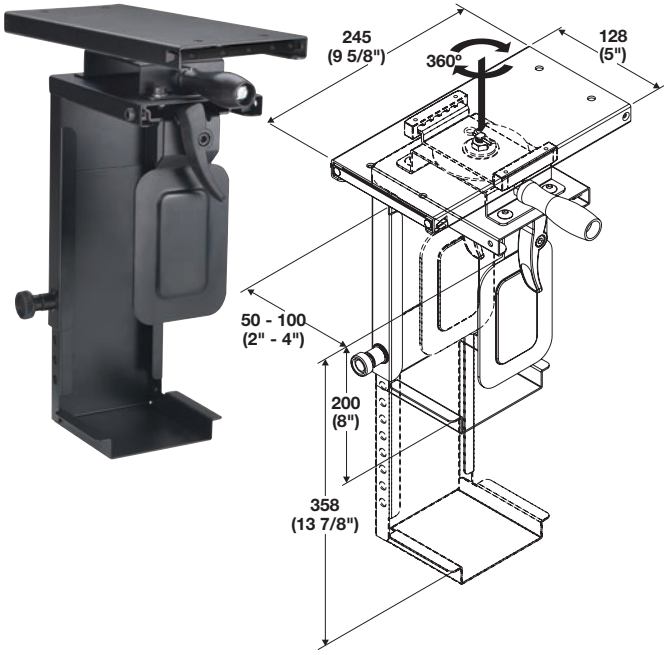

> Adjustment range for smaller CPUs
> Quick-release pin for easy height adjustment
> Innovative lever adjustment for quick and secure width adjustment, custom fit to various CPU sizes
> 360° swivel provides easy access to connections on the rear of CPU
> Track provides 155 mm (6") of travel
> Weight capacity: 10 kg (22 lbs.)
> Width adjustment: 50–100 mm (2"–4")
> Height adjustment: 200–358 mm (8"–13 7/8")
> Material: Steel

Finish	Item No.
black	639.72.350

Dimensional data not binding. Dimensions in mm, inches are approximate. We reserve the right to alter specifications without notice.

6

HÄFELE

CASTERS, FEET, LEGS, TABLE FITTINGS

Casters

Light Duty 6.3, 6.8-6.9
Medium Duty 6.4-6.7, 6.10
Heavy Duty 6.4-6.5
Enclosed 6.5
Single Wheel Swivel 6.11-6.12, 6.15
Fixed 6.12
Roller-Mini 6.13-6.14
Ball 6.14
Coal Box and Bed Box 6.15

Furniture Feet

Mobile Furniture Foot 6.16-6.17
Metal Furniture Feet 6.18-6.22
Häfele AXILO™ Plinth System 6.23-6.27
Base Cabinet Feet 6.28-6.35

Table Legs

Mini Legs 6.36
E-Legs 6.37-6.45
Industrial Angle Iron Legs 6.46
Square Legs 6.47
Hair Pin Legs 6.48
Single Column Support Legs 6.49
H-Legs 6.50
U-Leg 6.51
Folding Table Legs 6.52
Stainless Steel Legs/Column 6.53-6.54
KOYO Table System 6.55-6.57
Pull-Out Table Fitting with Leg 6.58
AdjusTableSystem®
Essential Table Base 6.59
Adjustable Columns 6.60-6.61

Backrest Bracket 6.62

Furniture Glides/Levelers

QuickClick Glides 6.63-6.67
Glides 6.68-6.70
Levelers 6.71-6.79

Table Fittings

Table Top Swivel Fitting 6.80-6.81
Tavoflex Top Lift-Up Fitting 6.82
Table Connectors 6.83-6.84
Folding Table Fittings 6.85
Drop-Leaf Fitting 6.86
Leg Fittings 6.87

Accessories

Modesty Panel Bracket 6.88
Privacy Screen Hardware 6.89
Turntables 6.90

Dimensional data not binding. Dimensions in mm, inches are approximate. We reserve the right to alter specifications without notice.

Casters

Caster Features

With or without brake

Nylon hood and wheel

Hard wheel surface

Wheel diameter **40 or 50 mm**

> For light duty applications
> Well-spaced wheels for exceptionally smooth running action
> Hard, abrasion-proof surface is particularly suitable for soft floor coverings such as carpets
> Weight capacity: 35 kg (77 lbs.) per caster

→ Caster

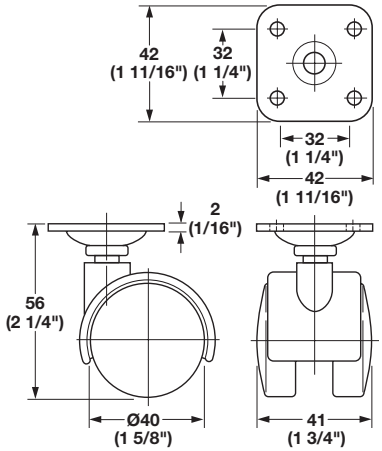

> With mounting plate
> Wheel Ø: 40 mm (1 5/8")
> Material: Nylon, Steel; Finish: black matt

Version	Item No.
Without brake	660.04.331
With brake	660.05.331

→ Caster

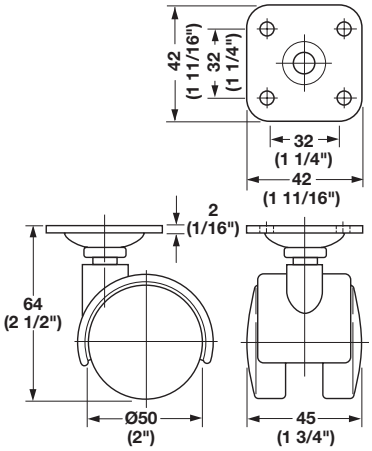

> With mounting plate
> Wheel Ø: 50 mm (2")
> Material: Nylon, Steel; Finish: black matt

Version	Item No.
Without brake	660.04.351
With brake	660.05.351

→ Caster

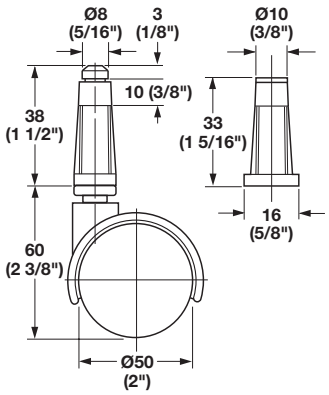

> With plastic socket
> For press fitting into a Ø10 mm (3/8") hole
> Wheel Ø: 50 mm (2")
> Material: Nylon, Steel; Finish: black matt

Version	Item No.
Without brake	660.89.323
With brake	660.86.322

Supplied With
4 Casters

→ Caster

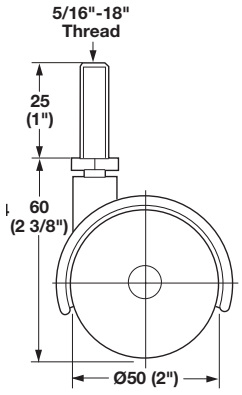

> With threaded stem
> Thread: 5/16"-18
> Wheel Ø: 50 mm (2")
> Material: Nylon, Steel; Finish: black matt

Version	Item No.
Without brake	660.04.353
With brake	660.05.353

Note
Threaded inserts and brackets required.

Dimensional data not binding. Dimensions in mm, inches are approximate. We reserve the right to alter specifications without notice.

Casters

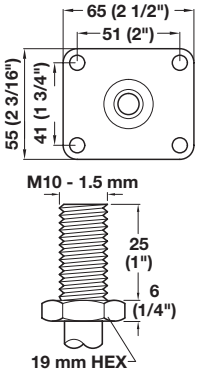

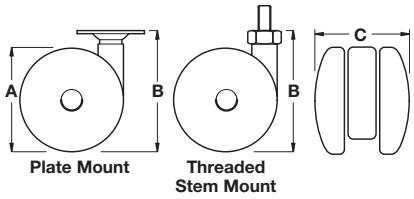

> Use wherever maximum stability and strength are required
> Suitable for soft as well as hard flooring surfaces

→ Casters

> With brake
> Material: Nylon, Steel; Finish: black

Plate mount - Size Ø	A	B	C	Weight capacity	Item No.
76 (3")	73 (2 7/8")	90 (3 1/2")	63 (2 1/2")	80 kg (175 lbs.)	660.58.321
102 (4")	100 (3 15/16")	117 (4 5/8")	74 (2 7/8")	100 kg (220 lbs.)	660.58.341
Threaded stem mount M10					
76 (3")	73 (2 7/8")	85 (3 3/8")	63 (2 1/2")	80 kg (175 lbs.)	660.58.323

→ Casters

> Without brake
> Material: Nylon, Steel; Finish: black

Plate mount - Size Ø	A	B	C	Weight capacity	Item No.
76 (3")	73 (2 7/8")	90 (3 1/2")	63 (2 1/2")	80 kg (175 lbs.)	660.57.321
102 (4")	100 (3 15/16")	117 (4 5/8")	74 (2 7/8")	100 kg (220 lbs.)	660.57.341
Threaded stem mount M10					
76 (3")	73 (2 7/8")	85 (3 3/8")	63 (2 1/2")	80 kg (175 lbs.)	660.57.323

Dimensional data not binding. Dimensions in mm, inches are approximate. We reserve the right to alter specifications without notice.

Casters

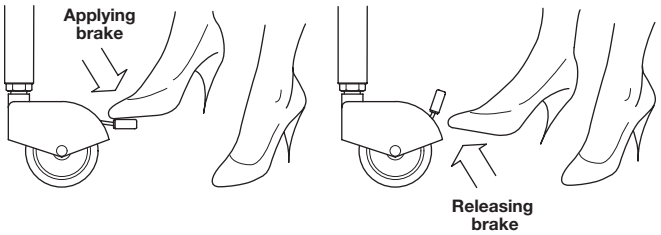

→ Enclosed Caster

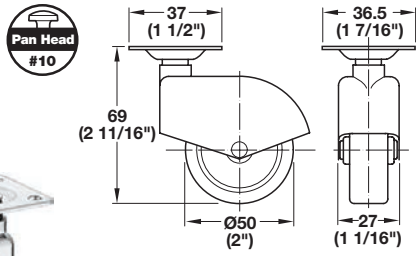

> With mounting plate
> Wheel Ø: 50 mm (2")
> Weight capacity: approximately 50 kg (110 lbs.)
> Material: Zinc Alloy; Finish: chrome-plated
Wheel: Soft Plastic; Color: black

Version	Item No.
Without brake	660.18.264
With brake	660.19.261

→ Roller Caster

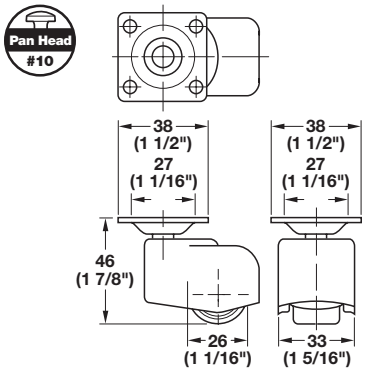

> Single wheel low profile
> With mounting plate
> Wheel Ø: 26 mm (1 1/16")
> Weight capacity: approximately 75 kg (165 lbs.)
> Material: Plastic

Color	Item No.
black matt	661.31.315

Pan head screws pages 12.9-12.10

Dimensional data not binding. Dimensions in mm, inches are approximate. We reserve the right to alter specifications without notice.

Casters

→ Caster

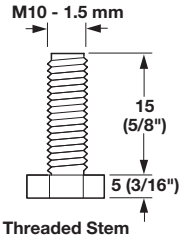

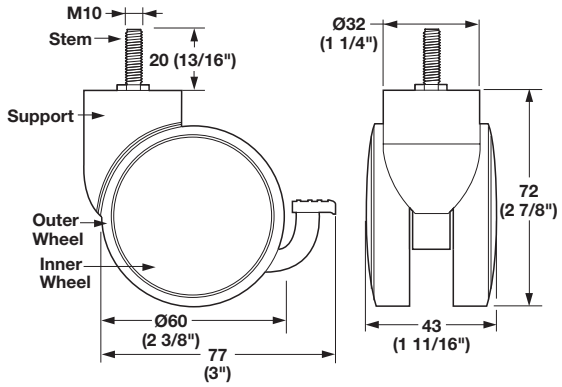

> With threaded stem
> Wheel Ø: 60 mm (2 3/8")
> Weight capacity: 50 kg (110 lbs.) per caster
> Material: Outer wheel: Nylon; Stem: Steel
Inner wheel & Support: ABS Plastic
Finish: black/silver RAL 9006

Version	Item No.
Without brake	660.32.991
With brake	660.31.991

→ Caster

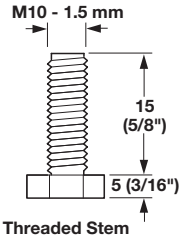

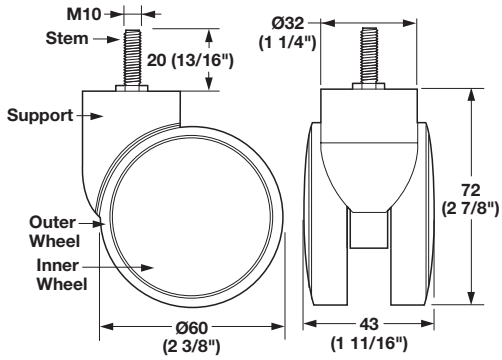

> With threaded stem
> Wheel Ø: 60 mm (2 3/8")
> Weight capacity: 50 kg (110 lbs.) per caster
> Material: Outer wheel: Nylon; Stem: Steel
Inner wheel & Support: ABS Plastic
Finish: black

Version	Item No.
Without brake	660.32.891
With brake	660.31.891

→ Caster

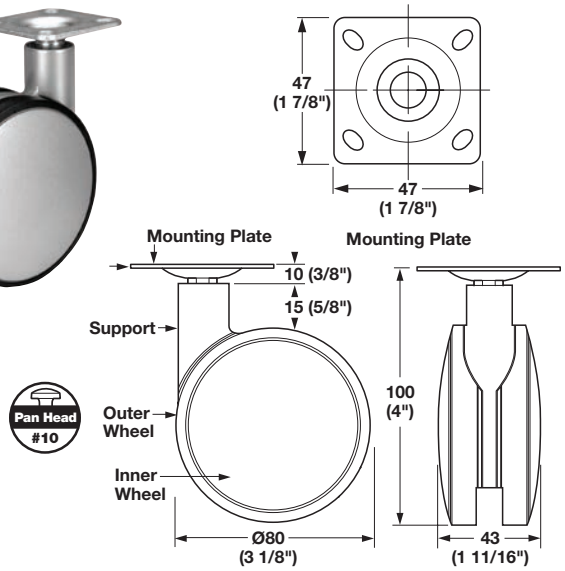

> With mounting plate
> Wheel Ø: 80 mm (3 1/8")
> Weight capacity: 70 kg (154 lbs.) per caster
> Material: Outer wheel: Nylon; Stem: Steel
Inner wheel: ABS Plastic; Support: Zinc
Finish: black/silver RAL 9006

Version	Item No.
Without brake	660.30.992
With brake	660.29.992

Pan head screws pages 12.9-12.10

Dimensional data not binding. Dimensions in mm, inches are approximate. We reserve the right to alter specifications without notice.

Casters

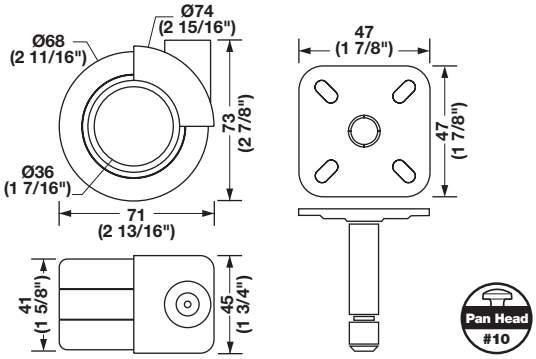

> With mounting plate: 47 x 47 mm (1 7/8" x 1 7/8")
> Height with mounting plate: 80 mm (3 1/8")
> Wheel Ø: 68 mm (2 11/16")
> Weight capacity: 50 kg (110 lbs.) per caster

→ Caster

> Material: Caster: Steel/Plastic; Finish: chrome; Wheel: black

Version	Item No.
Without brake	661.24.201
With brake	661.24.204

→ Caster

> Material: Caster: Steel/Plastic; Finish: black

Version	Item No.
Without brake	661.24.301
With brake	661.24.304

→ Caster

> With brake
> Material: Caster: Steel/Plastic

Caster/wheel	Item No.
silver/gray	661.24.504

Pan head screws pages 12.9-12.10

Dimensional data not binding. Dimensions in mm, inches are approximate. We reserve the right to alter specifications without notice.

Casters

→ Caster

> Height with mounting plate: 52 mm (2 1/16")
> Wheel Ø: 40 mm (1 9/16")
> Weight capacity: 35 kg (77 lbs.) per caster
> Material: Plastic

Color	Item No.
black	660.33.371

Supplied With
2 pcs.

→ Caster

> Height with mounting plate: 80 mm (3 1/4")
> Wheel Ø: 60 mm (2 3/8")
> Weight capacity: 80 kg (176 lbs.) per caster
> Material: Housing: Zinc; Wheel & Brake: Plastic

Housing/Brake/Wheel	Item No.
silver/black/gray	660.33.911

Supplied With
2 pcs.

→ Caster

> No hub
> Height with mounting plate: 110 mm (4 1/4")
> Wheel Ø: 67 mm (2 5/8")
> Weight capacity: 50 kg (110 lbs.) per caster
> Material: Zinc; Wheel & Brake: Plastic; Color: gray

Finish	Item No.
chrome	661.88.201
aluminum	661.88.901

Supplied With
2 pcs.

Special Note
Casters on this page are priced per piece but packed 2 casters per bag. Order 2 casters and you will receive 2 casters. To receive 4 please order 4 casters.

Dimensional data not binding. Dimensions in mm, inches are approximate. We reserve the right to alter specifications without notice.

Casters

> For light duty applications
> Non-marring polyurethane wheel
> Moves with ease on both hard and soft surfaces

Note
Brake can be easily removed if not required.

→ Caster

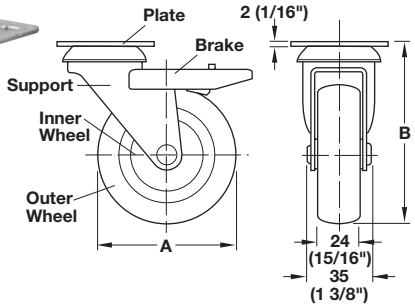

> With mounting plate
> Weight capacity: 30 kg (66 lbs.)
> Material: Outer wheel: PU-Polyurethane; Color: gray
> Inner wheel: Nylon; Color: black
> Support/plate: Steel

A	B	Item No.
Ø75 (3")	95 (3 3/4")	663.25.921
Ø100 (4")	125 (5")	663.25.931

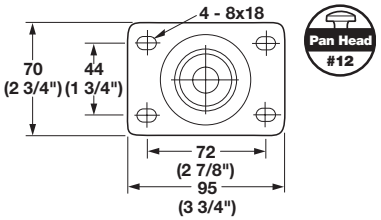

Mounting plate for Ø100 mm caster

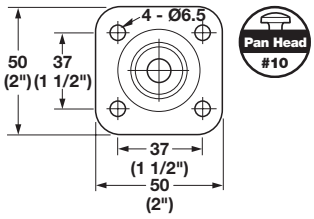

Mounting plate for Ø75 mm caster

→ Caster

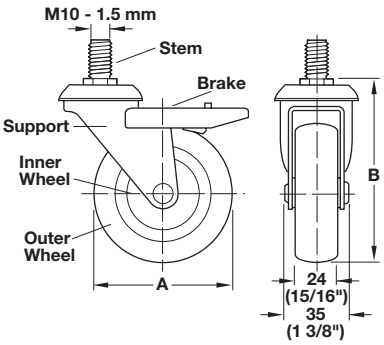

> With M10 threaded stem
> Weight capacity: 30 kg (66 lbs.)
> Material: Outer wheel: PU-Polyurethane; Color: gray
> Inner wheel: Nylon; Color: black
> Support/stem: Steel

A	B	Item No.
Ø75 (3")	95 (3 3/4")	663.25.922
Ø100 (4")	125 (5")	663.25.932

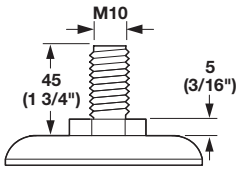

Threaded stem for Ø75 mm caster

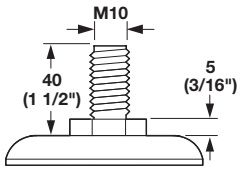

Threaded stem for Ø100 mm caster

Pan head screws pages 12.9-12.10

Dimensional data not binding. Dimensions in mm, inches are approximate. We reserve the right to alter specifications without notice.

Casters

> Hard rubber wheel will not mark surfaces
> Brake locks both pivoting and rotation
> Swiveling caster
> Weight capacity: 50 kg (110 lbs.) per caster

→ Caster

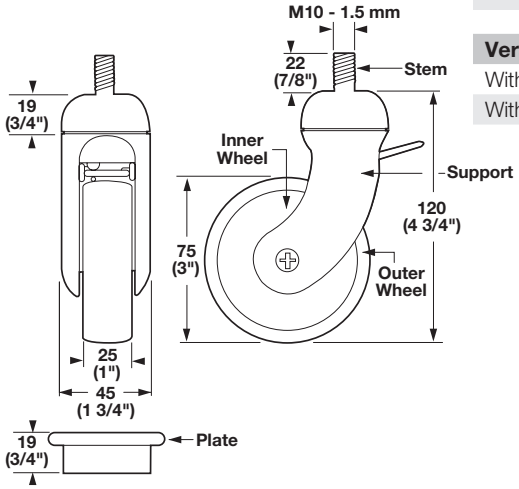

> With M10 Stem
> Material: Outer wheel: Hard Rubber
Inner wheel: Plastic; Color: silver
Support: Reinforced Nylon; Color: silver
Threaded stem: Steel

Version	Item No.
Without brake	663.22.211
With brake	663.23.211

→ Caster

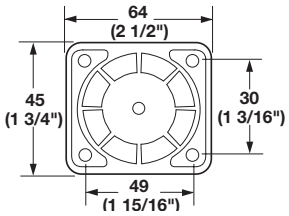

> With mounting plate
> Material: Outer wheel: Hard Rubber
Inner wheel: Plastic; Color: silver
Support: Reinforced Nylon; Color: silver
Plate: Reinforced Nylon

Version	Item No.
Without brake	663.22.212
With brake	663.23.212

Dimensional data not binding. Dimensions in mm, inches are approximate. We reserve the right to alter specifications without notice.

Casters

→ Swiveling Locking Caster

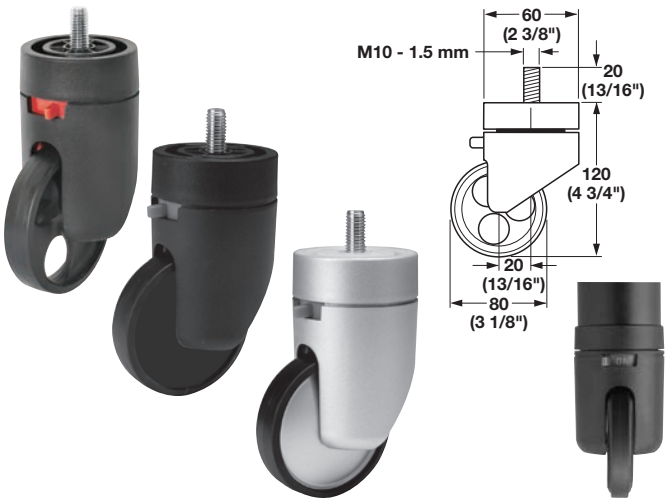

> With brake and M10 thread
> Unique locking mechanism secures wheel in both rotation and swivel
> Rubberized surface on wheel insures a quiet and smooth operation
> Weight capacity: 120 kg (264 lbs.) per caster
> Material: Steel; Body: Plastic; Wheel: Rubber

Body/Wheel	Item No.
black/pierced black	661.29.301
black/solid black	661.29.305
silver/silver	661.29.910

Supplied With
4 Casters

→ Swiveling Caster

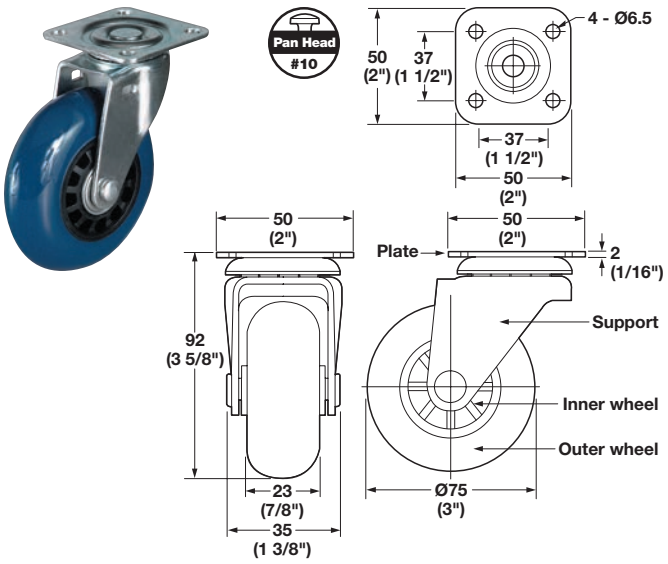

> With mounting plate
> Non-marring polyurethane wheel
> Smooth, quiet running on ball bearing axle
> Weight capacity: 40 kg (88 lbs.) per caster
> Material: Outer/Inner wheel: PU-Polyurethane
Support/plate: Steel; Finish: zinc-plated

Outer wheel	Inner wheel	Item No.
gray	black	663.24.521
blue	black	663.24.821
black	black	663.24.921
transparent	transparent	663.24.721

Pan head screws pages 12.9-12.10

Dimensional data not binding. Dimensions in mm, inches are approximate. We reserve the right to alter specifications without notice.

Casters

> Moves with ease on both hard and soft surfaces
> Available in 100 and 125 mm (4" and 5") wheel diameters
> High quality brake provides positive locking function
> Outer wheels are made of non-marring TPR (Thermo Plastic Rubber)
> Total lock, both wheel and swivel lock

→ Swiveling Caster

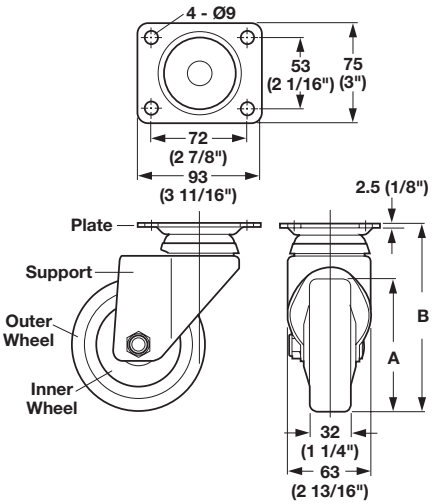

> Material: Outer wheel: TPR; Color: gray
Inner wheel: Nylon; Color: light gray
Support/plate: Steel; Finish: zinc-plated

A	B	Weight capacity	Item No.
Ø100 (4")	142 (5 5/8")	70 kg (154 lbs.)	670.12.901
Ø125 (5")	170 (6 3/4")	90 kg (198 lbs.)	670.12.902

→ Swiveling Caster

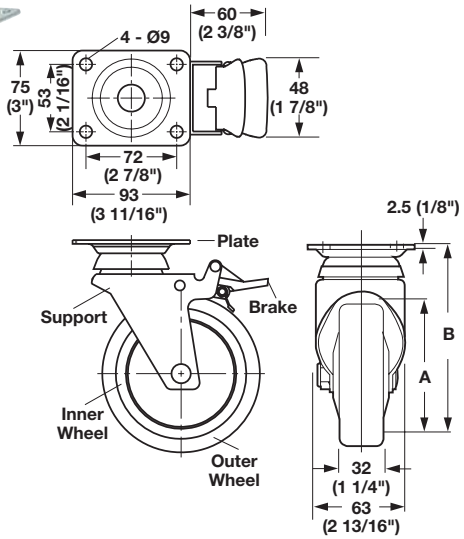

> With brake
> Material: Outer wheel: TPR; Color: gray
Inner wheel: Nylon; Color: light gray
Support/plate: Steel; Finish: zinc-plated

A	B	Weight capacity	Item No.
Ø100 (4")	142 (5 5/8")	70 kg (154 lbs.)	670.13.901
Ø125 (5")	170 (6 3/4")	90 kg (198 lbs.)	670.13.902

→ Fixed Caster

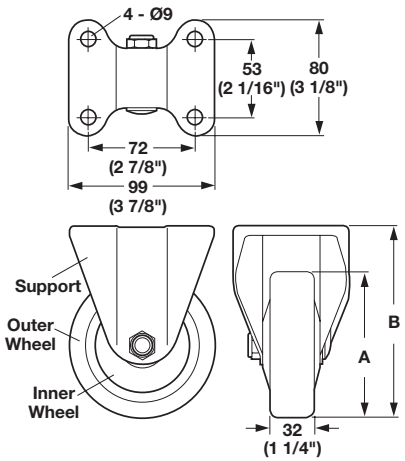

> Material: Outer wheel: TPR; Color: gray
Inner wheel: Nylon; Color: light gray
Support/plate: Steel; Finish: zinc-plated

A	B	Weight capacity	Item No.
Ø100 (4")	142 (5 5/8")	70 kg (154 lbs.)	670.14.901
Ø125 (5")	170 (6 3/4")	90 kg (198 lbs.)	670.14.902

Dimensional data not binding. Dimensions in mm, inches are approximate. We reserve the right to alter specifications without notice.

Casters

> White hard wheel for soft floors such as carpet
> Gray soft wheel for hard floors such as wood
> Weight capacity: approximately 50 kg (110 lbs.) per caster

→ Roller-Mini Swivel Caster

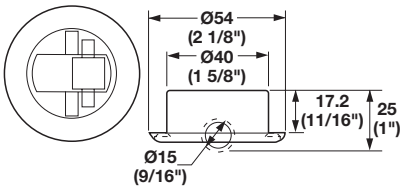

> Moves and swivels furniture discreetly and elegantly
> Only 7 mm (1/4") from floor, making any furniture mobile
> Material: Plastic; Color: black

Wheel/Color	Item No.
Hard/white	661.04.309
Soft/gray	661.04.340

→ Roller-Mini Fixed Caster

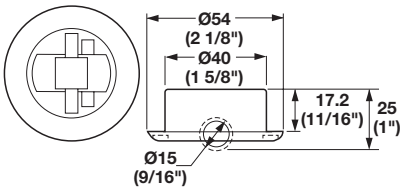

> Same design as above in a fixed version
> Moves in only one direction
> Material: Plastic; Color: black

Wheel/Color	Item No.
Hard/white	661.04.318
Soft/gray	661.04.320

→ Roller-Mini Swivel Caster with Retractable Wheel

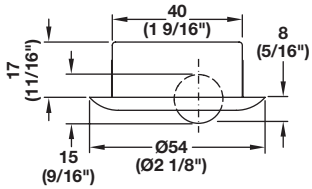

> Retractable wheel allows furniture to brake under weight: benches, ottomans, stools, etc.
> Wheel retracts at a weight of 15 kg (33 lbs.)/caster or 45 kg (100 lbs.)/caster
> Material: Plastic; Color: black

Wheel/color	Item No.
Braking function at 15 kg (33 lbs.)	
Hard/white	661.04.351
Soft/gray	661.04.361
Braking function at 45 kg (100 lbs.)	
Hard/white	661.04.352
Soft/gray	661.04.362

→ Mini Roller Caster

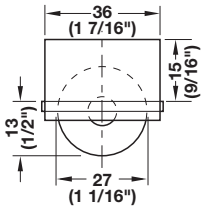

> Weight capacity: 40 kg (88 lbs.) per caster
> Material: Plastic; Color: black

Wheel/Color	Item No.
Hard/white	661.05.320
Soft/gray	661.05.330

Dimensional data not binding. Dimensions in mm, inches are approximate. We reserve the right to alter specifications without notice.

Casters

→ Roller-Mini Combined Glide/Swivel Caster

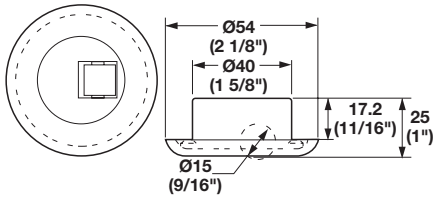

> For applications that normally would require a glide
> Caster wheel is used on hard surfaces; Glide is used on carpet
> Material: Plastic; Color: black

Wheel/Color	Item No.
Hard/white	661.04.327

→ Ball Casters

> With screw-on mounting plate and reinforced base
> The ball casters can be moved in any direction
> Caster can be used as a conveyor system for transporting heavy loads when mounted upside down
> Material: Steel; Finish: Housing: yellow chromate;
Ball: chrome-plated

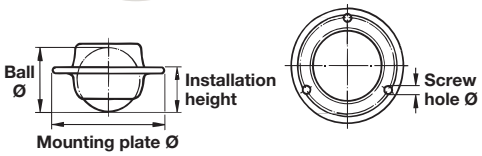

Ball Ø	Approx. weight capacity per caster	Installation height	Insert part Ø	Insert depth	Mounting plate Ø	Screw hole Ø	Item No.
13 (1/2")	6 kg (13 lbs.)	10 (3/8")	16 (5/8")	5.5 (3/16")	25 (1")	2 (1/16")	661.02.210
20 (13/16")	12 kg (26 lbs.)	15 (9/16")	23.5 (15/16")	8.5 (5/16")	35 (1 3/8")	3 (1/8")	661.02.230
25 (1")	17 kg (37 lbs.)	20 (13/16")	33 (1 5/16")	12 (1/2")	45 (1 3/4")	3 (1/8")	661.02.250

Dimensional data not binding. Dimensions in mm, inches are approximate. We reserve the right to alter specifications without notice.

Casters

→ Coal Box Casters

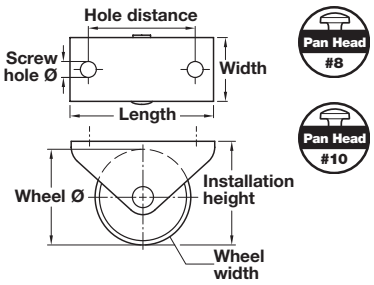

> With screw-on mounting plate, free-running
> Suitable for all low level storage boxes
> Casters can be used as a conveyor system for transporting heavy loads when mounted upside down
> Material: Housing: Steel; Finish: zinc-plated
Wheel: Plastic; Color: black

Wheel Ø	Weight capacity per caster	Installation height	Mounting plate L x W	Hole distance	Wheel width	Screw hole Ø	Item No.
15 (9/16")	15 kg (33 lbs.)	17.5 (11/16")	30 x 17 (1 3/16" x 11/16")	20 (13/16")	13 (1/2")	4 (3/16")	661.23.322
25 (1")	20 kg (44 lbs.)	28 (1 1/8")	40 x 17 (1 9/16" x 11/16")	30 (1 3/16")	13 (1/2")	4.3 (3/16")	661.23.304
30 (1 3/16")	25 kg (55 lbs.)	32 (1 1/4")	45 x 20 (1 3/4" x 13/16")	35 (1 3/8")	15 (9/16")	5 (3/16")	661.23.313
45 (1 3/4")	50 kg (110 lbs.)	48.5 (1 15/16")	67 x 27 (2 5/8" x 1 1/16")	54 (2 1/8")	19 (3/4")	5.2 (3/16")	661.25.906

→ Bed Box Casters

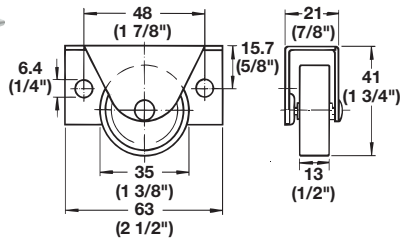

> With screw-on mounting plate
> Featuring a wide tread for easy movement on carpet
> The side mounting facility and low height make it suitable for installation in limited clearance areas
> Weight capacity: 40 kg (88 lbs.) per caster
> Material: Housing: Steel; Wheel: Hard Plastic

Housing/Wheel	Item No.
zinc-plated/white	660.98.904
black zinc/black	660.98.304

→ Swivel Casters

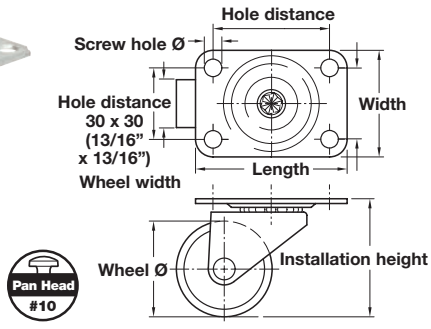

> With screw-on mounting plate
> Abrasion-proof wheels run in friction bearings
> Hard wheel surface, suitable for soft floor coverings
> Double ball bearing in the ring mount, free-running
> Material: Housing: Steel; Finish: zinc-plated
Wheel: Plastic; Color: black

Wheel Ø	Weight capacity per caster	Installation height	Mounting plate L x W	Wheel width	Screw hole Ø	Item No.
30 (1 3/16")	30 kg (65 lbs.)	48 (1 7/8")	38 x 38 (1 1/2" x 1 1/2")	15 (9/16")	4.3 (3/16")	662.03.861
40 (1 9/16")	35 kg (77 lbs.)	63 (2 1/2")	42 x 42 (1 5/8" x 1 5/8")	20 (13/16")	5 (3/16")	662.03.870

Pan head screws pages 12.9-12.10

Dimensional data not binding. Dimensions in mm, inches are approximate. We reserve the right to alter specifications without notice.

This page is left blank intentionally.

Dimensional data not binding. Dimensions in mm, inches are approximate. We reserve the right to alter specifications without notice.

Furniture Feet

> Round and square furniture feet
> Weight capacity: 80 kg (175 lbs.)
> Material: Steel, powder-coated

→ Round Foot

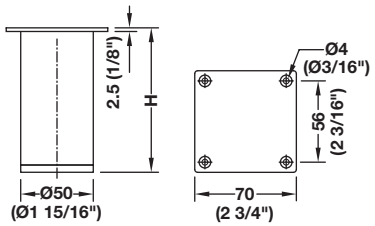

> Ø: 50 mm (2")

Height	Finish	Item No.
100 (4")	jet black, RAL 9005	634.74.251
	anthracite industrial design	634.74.261
	silver aluminum, RAL9006	634.74.271
150 (6")	jet black, RAL 9005	634.74.252
	anthracite industrial design	634.74.262
	silver aluminum, RAL9006	634.74.272

→ Square Foot

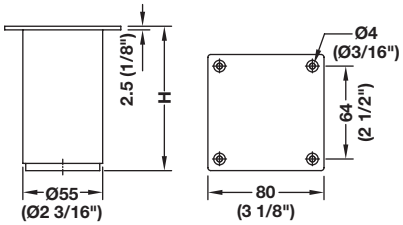

> W x D: 55 x 55 mm (2 3/16" x 2 3/16")

Height	Finish	Item No.
100 (4")	jet black, RAL 9005	634.74.256
	anthracite industrial design	634.74.266
	silver aluminum, RAL9006	634.74.276
150 (6")	jet black, RAL 9005	634.74.257
	anthracite industrial design	634.74.267
	silver aluminum, RAL9006	634.74.277

Mobile furniture foot page 6.16

Dimensional data not binding. Dimensions in mm, inches are approximate. We reserve the right to alter specifications without notice.

Furniture Feet

Pan Head #9

→ Foot

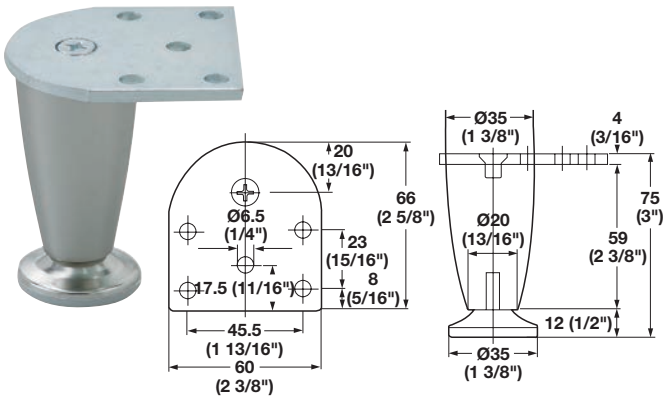

> Height: 75 mm (3")
> Levelers offer approximately 12 mm (1/2") of adjustment
> Material: Zinc die-cast, plated; Levelers: nickel matt

Finish	Item No.
chrome-plated	634.28.201
nickel matt	634.28.601

Supplied With
2 pcs.

→ Foot

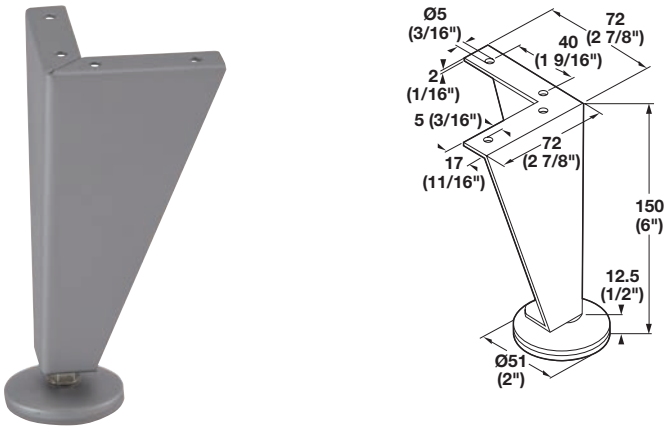

> Height: 150 mm (6")
> M8 thread offers 19 mm (3/4") of adjustment
> Material: Steel plated, epoxy-coated; Levelers: chrome-plated

Finish	Item No.
chrome-plated	634.32.202
nickel matt	634.32.602
silver epoxy	634.32.902

Supplied With
2 pcs.

> Static weight rating: approximately 50 kg (110 lbs.) per foot
> Screw mounted

Please Note
> Feet on this page are priced per pc.
> Minimum order quantity is 2 pcs.
> If 4 feet are required, please order 4 pcs.

→ Foot

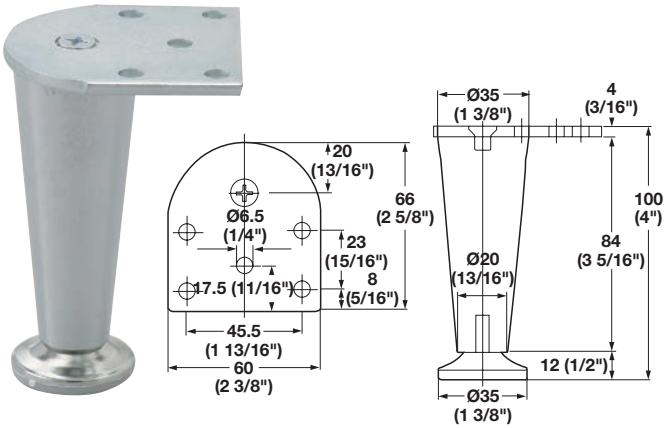

> Height: 100 mm (4")
> Levelers offer approximately 12 mm (1/2") of adjustment
> Material: Zinc die-cast, plated; Levelers: nickel matt

Finish	Item No.
chrome-plated	634.28.202
nickel matt	634.28.602

Supplied With
2 pcs.

Pan head screws pages 12.9-12.10

Dimensional data not binding. Dimensions in mm, inches are approximate. We reserve the right to alter specifications without notice.

Furniture Feet

→ Height Adjustable Foot, round

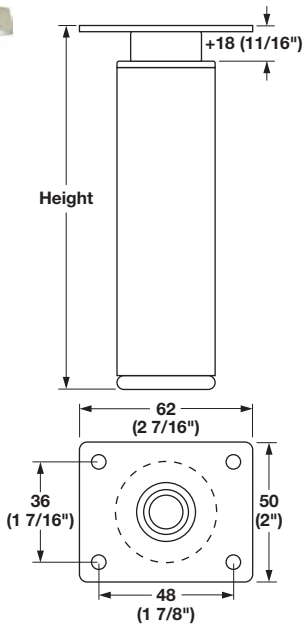

> Adjustable at top plate
> Adjustment: 18 mm (11/16")
> Ø x Height: 35 x 100 mm (1 3/8" x 3 15/16")
> Material: Aluminum

Finish	Item No.
polished chrome	634.16.211
matt silver	634.16.411

Supplied With 4 Feet

→ Height Adjustable Foot, square

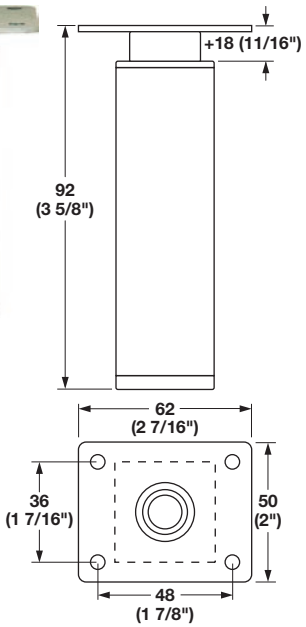

> Adjustable at top plate
> Adjustment: 18 mm (11/16")
> L x W x H: 35 x 35 x 92 mm (1 3/8" x 1 3/8" x 3 5/8")
> Material: Aluminum

Finish	Item No.
polished chrome	634.16.221
matt silver	634.16.421

Supplied With 4 Feet

→ Foot

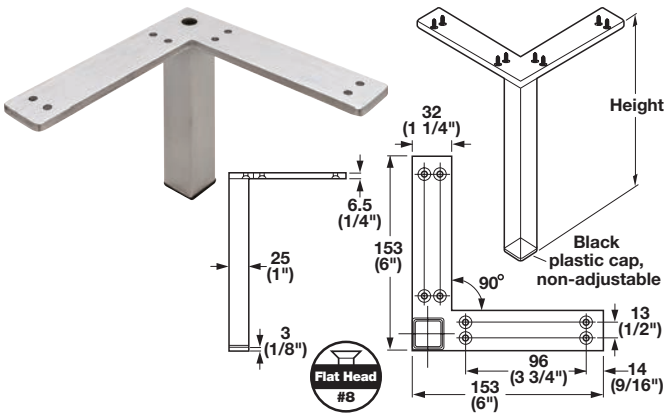

> Material: Steel; Cap: Plastic; Color: black

Height	polished chrome	brushed steel
129 (5 1/16")	634.47.201	634.47.401
231 (9 1/8")	634.47.202	634.47.402
433 (17 1/16")	634.47.203	634.47.403

Flat head screws	pages 12.7-12.8, 12.10, 12.13
Pan head screws	pages 12.9-12.10

→ Leveler

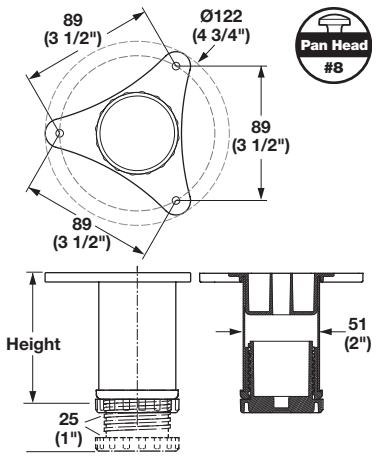

> Adjustable; offers customization and flexibility for quick installation
> Ideal for applications in garage organization
> Fluted aluminum tube is strong and non-corrosive in damp conditions
> Tube is easy to cut for custom lengths (saw blade for cutting non-ferrous metals recommended)
> Adjustable foot is pre-inserted in tube; offers + 25 mm (1") of adjustment
> Press fit tube onto surface-mounted base plate
> Base plate can be mounted and used as a glide during production
> Static weight rating: 160 kg (350 lbs.) per leg
> Material: Tube: Aluminum; Base plate & foot: Plastic; Color: black

Base height	matt aluminum	black
76 (3")	792.01.080	792.01.380
152 (6")	792.01.081	792.01.381
228 (9")	792.01.082	792.01.382
305 (12")	792.01.083	-

Dimensional data not binding. Dimensions in mm, inches are approximate. We reserve the right to alter specifications without notice.

Furniture Feet

→ Square Furniture Feet

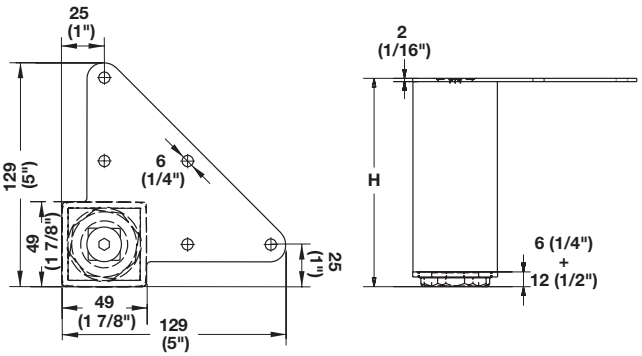

- > With adjustable glide
- > Available in typical plinth height of 101 mm (4") and typical vanity height of 254 mm (10")
- > With clear lacquer coating
- > Mounting plate allows feet to be mounted flush with corner of cabinet
- > With 12 mm (1/2") of adjustment
- > Feet cannot be cut down
- > Weight capacity: 50 kg (100 lbs.) per foot
- > Material: Steel; Glide: Plastic

Height	polished chrome	brushed steel
101 (4")	634.13.210	634.13.012
254 (10")	634.13.220	634.13.021

Supplied With
4 Feet and mounting plates (screws not provided)

Flat head screws pages 12.7-12.8, 12.10, 12.13

Dimensional data not binding. Dimensions in mm, inches are approximate. We reserve the right to alter specifications without notice.

Furniture Feet

→ Equipment Feet

> Ideally suited for industrial equipment
> NSF (National Sanitation Foundation) rated
> With 38 mm (1 1/2") adjustment
> Available in 102 mm (4") and 152 (6") heights
> Static weight rating: 907 kg (2000 lbs.)
> Material: 304 Stainless Steel

Length	Item No.
102 (4")	635.70.051
152 (6")	635.70.050

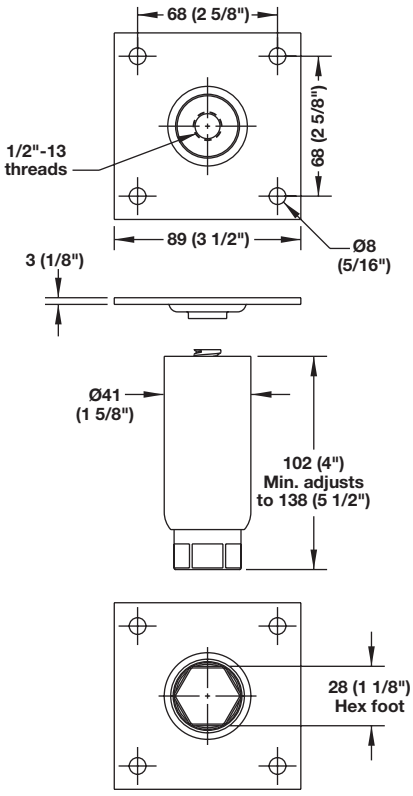

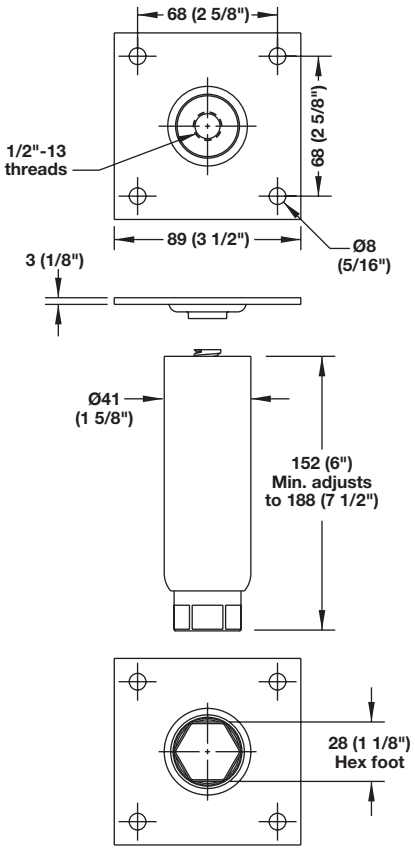

→ Plinth Panel Clip

> Snaps around feet
> Screw mounted
> Material: Plastic

Color	Item No.
gray	637.38.072

Dimensional data not binding. Dimensions in mm, inches are approximate. We reserve the right to alter specifications without notice.

This page is left blank intentionally.

Dimensional data not binding. Dimensions in mm, inches are approximate. We reserve the right to alter specifications without notice.

Furniture Feet

→ Furniture Feet

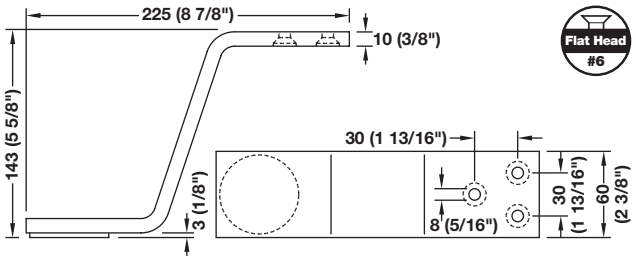

> With felt guide
> Without height adjustment
> Material: Steel

Finish	Item No.
stainless steel colored	634.84.010
chrome-plated	634.84.210

→ Furniture Feet

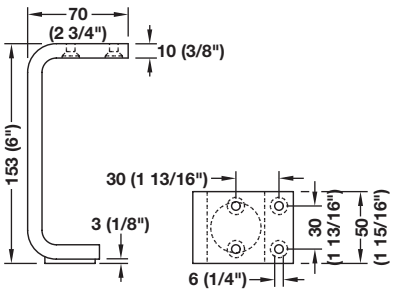

> With felt guide
> Without height adjustment
> Material: Steel

Finish	Item No.
stainless steel colored	634.84.043
chrome-plated	634.84.243

Flat head screws pages 12.7-12.8, 12.10, 12.13

Dimensional data not binding. Dimensions in mm, inches are approximate. We reserve the right to alter specifications without notice.

Mounting Plates

→ Square, M8

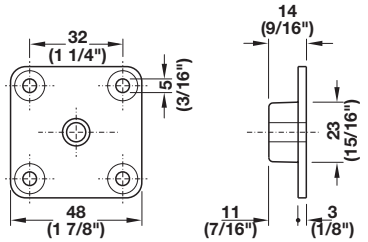

> Material: Zinc, galvanized

	Item No.
	634.15.080

Note
Mounting screws are not included.

→ Round, M8

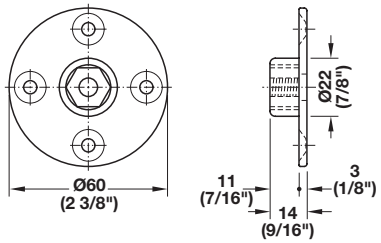

> Material: Zinc, galvanized

	Item No.
	634.15.070

Note
Mounting screws are not included.

→ Triangle, M8

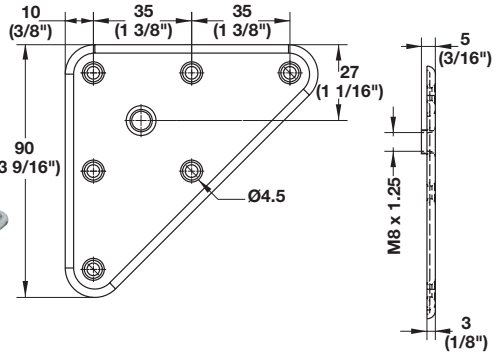

> Material: Steel, galvanized

	Item No.
	634.08.495

Note
Mounting screws are not included.

→ Round, M8

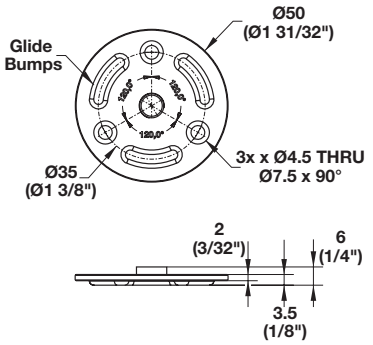

> Can be used as a glide until feet are mounted
> Material: Steel, galvanized

	Item No.
	635.79.310

Note
Mounting screws are not included.

Dimensional data not binding. Dimensions in mm, inches are approximate. We reserve the right to alter specifications without notice.

Häfele AXILO™ Plinth Adjusting Fitting System

> Serves as an arm extension
> Very robust
> Convenient operation and adjustment by hand or with electric tool
> Ergonomic installation for protection of the back
> Flexible, time-saving installation
> Large area of application from plinth height 53–220 mm (2 1/16"–8 21/32")
> Exact adjustment provided by the fine thread

→ Installation with Häfele AXILO™

With conventional plinth adjusting fitting systems.

Dimensional data not binding. Dimensions in mm, inches are approximate. We reserve the right to alter specifications without notice.

Häfele AXILO™

→ Mounting Plate, rectangular

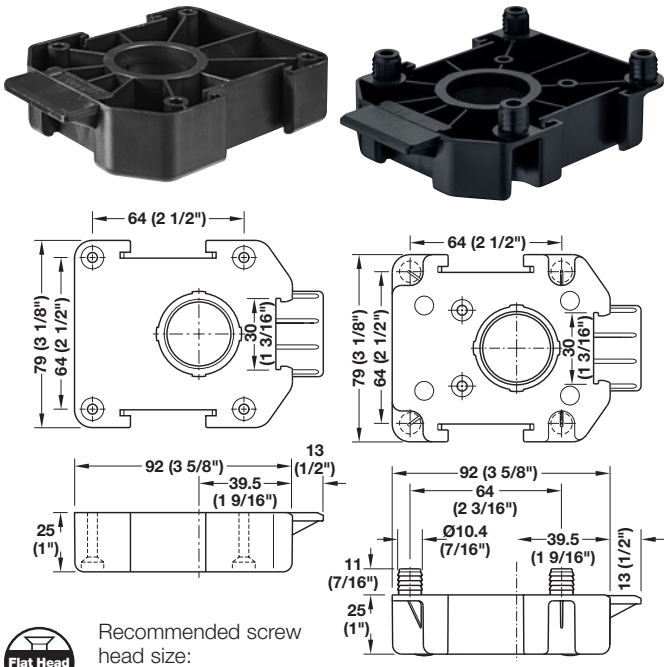

Flat Head

Recommended screw head size:
- #6 x 1 1/2" flat head screw
- protrudes approx. 5/8"

> Material: Plastic; Color: black

Mounting	Item No.
Screw mounted	637.76.341
Press fit, 10 mm (3/8") holes	637.76.334

Note Order adjustment feet separately, see next page.

→ Mounting Plate

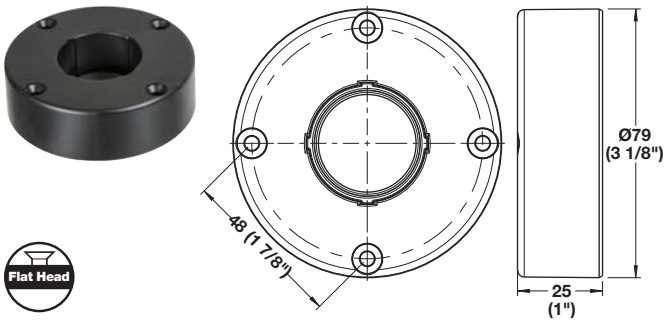

Flat Head

Recommended screw head size:
- #6 x 1 1/2" flat head screw
- protrudes approx. 5/8"

> Screw mounted
> Used for general applications when support tabs and plinth clips are not required
> Material: Plastic

Color	Item No.
black	637.76.344

Note Order adjustment feet separately, see next page.

→ Mounting Plate

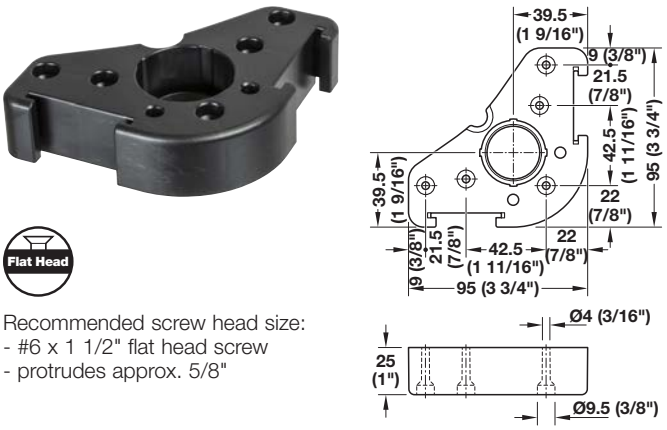

Flat Head

Recommended screw head size:
- #6 x 1 1/2" flat head screw
- protrudes approx. 5/8"

> For corner applications
> Screw mounted
> Material: Plastic

Color	Item No.
black	637.76.342

Note
Order adjustment feet separately, see next page.

→ Mounting Plate

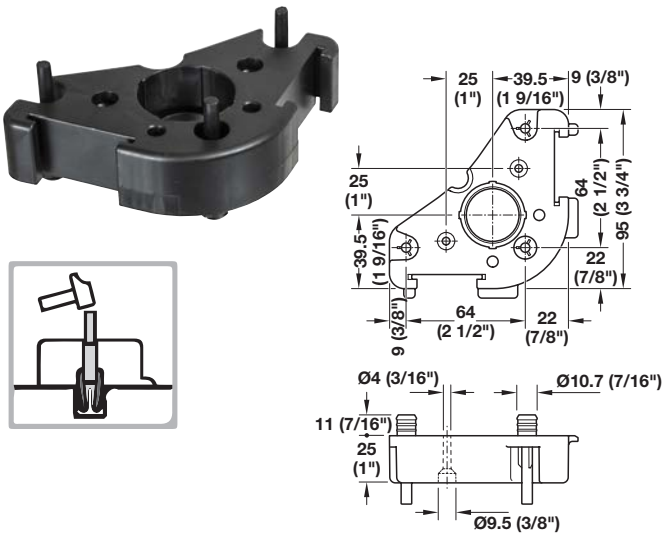

> For corner applications
> Pound-in dowel mount, 10 mm (3/8")
> Material: Plastic

Color	Item No.
black	637.76.343

Note
Order adjustment feet separately, see next page.

Axilo adjusting tool page 6.27

Dimensional data not binding. Dimensions in mm, inches are approximate. We reserve the right to alter specifications without notice.

Häfele AXILO™

→ Adjustment Feet

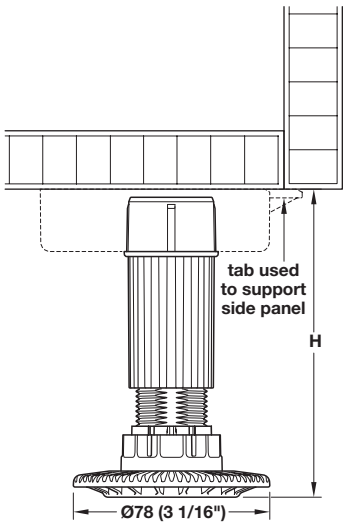

> Plug fits into mounting plate
> Adjustable range:
30 mm: -10 mm + 20 mm (1 3/16": -3/8" + 3/4")
> Height adjustment facility: < 80 kg (176 lbs.)
> Weight capacity: 150 kg (330 lbs.)/foot
> Material: Plastic; Color: black

Installation height H	Adjustment range	Item No.
60 (2 3/8")	50–80 (2"–3 1/8")	637.76.351
80 (3 1/8")	70–100 (2 3/4"–4")	637.76.352
100 (4")	90–120 (3 1/2"–4 3/4")	637.76.353
125 (4 15/16")	115–145 (4 1/2"–5 11/16")	637.76.354
150 (5 7/8")	140–170 (5 1/2"–6 11/16")	637.76.355
180 (7 1/16")	170–200 (6 11/16"–7 7/8")	637.76.356
200 (7 7/8")	190–220 (7 1/2"–8 11/16")	637.76.357

→ Press-Fit Low Profile Foot

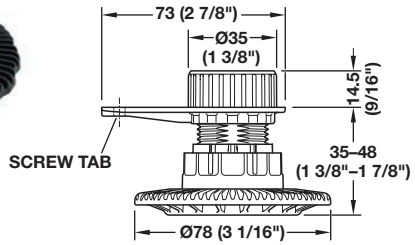

> Press-fits into a Ø 35 mm (1 3/8") hole and is then secured with screw tab
> Plinth height 35–48 mm (1 3/8"–1 7/8")
> Height adjustment with AXILO adjusting tool: -10 mm (3/8")
> Height adjustment facility: ≤ 80 kg (176 lbs.)
> Weight capacity: 150 kg (300 lbs.)/foot
> Material: Plastic

Color	Item No.
black	637.76.460

Supplied with
Mounting plate Ø35 mm (1 3/8")

→ Spacer

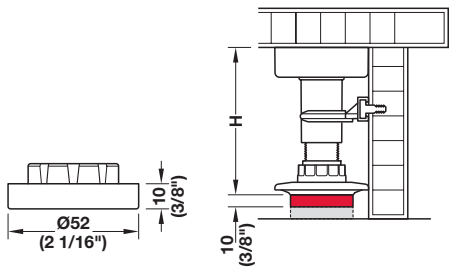

> Plugs into bottom of existing foot to add height
> Can be stacked
> Material: Plastic

Color	Item No.
black	637.76.422

Note
Order adjustment feet separately, see above.

Dimensional data not binding. Dimensions in mm, inches are approximate. We reserve the right to alter specifications without notice.

Häfele AXILO™

→ Plinth Panel Clips

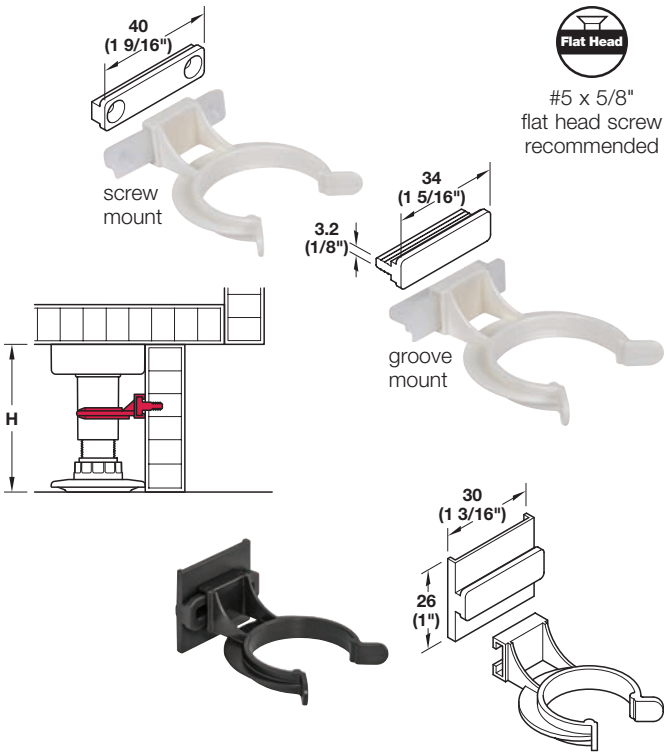

#5 x 5/8"
flat head screw
recommended

> Material: Plastic; Color: white

Mounting	Item No.
Screw mounted	637.38.054
Groove mounted	637.38.063

Note
For use from installation height H = 80 mm (3 1/8").

Clip for Plastic or Aluminum Plinths

> Slides into groove on back of plinth
> Material: Plastic

Color	Item No.
black	637.38.354

Note
For use from installation height H = 100 mm (4").

→ Plinth Panel Holder

Plinth height = H - 5–10 mm
(3/16"–3/8")

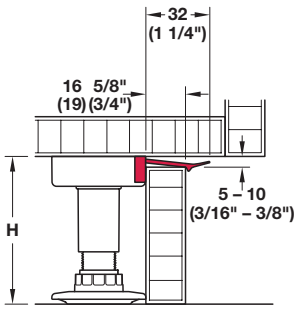

> For mounting the plinth panel
> Plug fits into mounting plates
> Material: Plastic

Panel thickness	Item No.
16 (5/8")	637.47.491
19 (3/4")	637.47.490

→ Plinth Profile with Sealing Lip

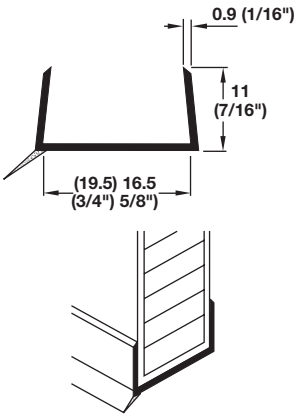

> Reliably prevents moisture from penetrating the front and edges of the plinth panels
> The soft PVC sealing lip adapts perfectly to the floor surface
> Length: 2.5 m (98 1/2")
> Material: Plastic (combination of hard and soft)

Color	For material thickness	
	16 mm (5/8")	19 mm (3/4")
white	713.22.762	713.22.792
transparent	713.22.062	713.22.092

Dimensional data not binding. Dimensions in mm, inches are approximate. We reserve the right to alter specifications without notice.

Häfele AXILO™

→ Premium Adjusting Tool

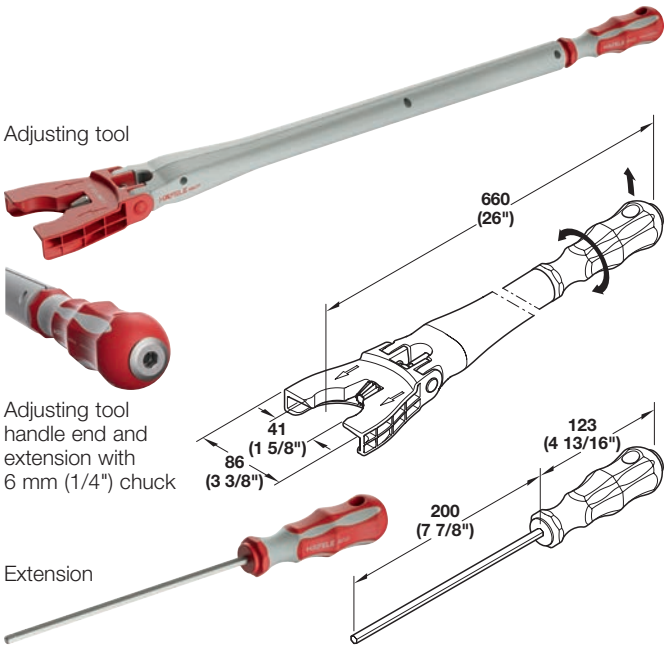

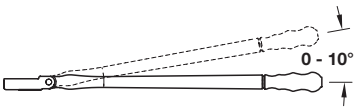

> Chuck: 6 mm (1/4")
> For adjustment of AXILO 78 plinth system
> Adjustment angle height: 0-10°
> Material: Plastic/Steel; Color: gray/red

Description	Item No.
AXILO™ adjusting tool	637.76.360
Extension	637.76.361

Supplied With
6 mm (1/4") Bit

Note
Adjust height by hand or with electric tool.

→ Light Adjusting Tool

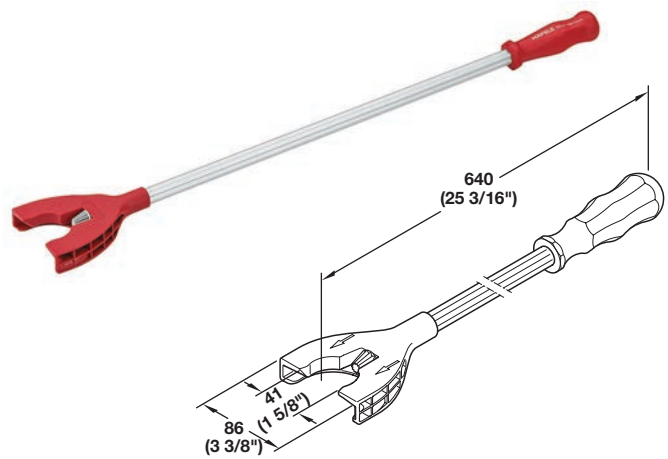

> A simpler, economic version of the above premium tool
> For adjustment of AXILO 78 plinth system
> By hand only, no adjustment angle
> Material: Plastic/Aluminum; Color: gray/red

Description	Item No.
AXILO™ light adjusting tool	637.76.430

Dimensional data not binding. Dimensions in mm, inches are approximate. We reserve the right to alter specifications without notice.

Mounting Plates and Clips

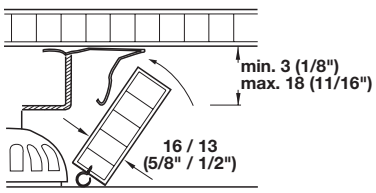

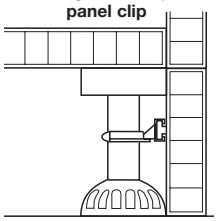

> Base heights listed are total including mounting plate, tube, and adjusting foot
> Bayonet locking of the tube in the mounting plate prevents the tube from pulling out during tilting, especially on tall cabinets
> Plinth panel attaches with the clips shown, or with Velcro applied to the mounting plate recess

→ Square Mounting Plate

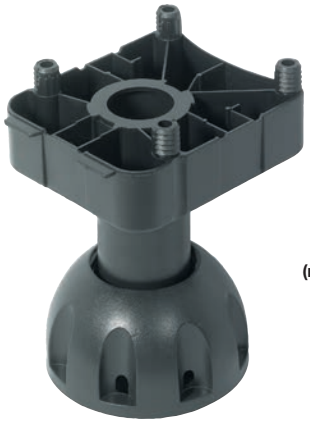

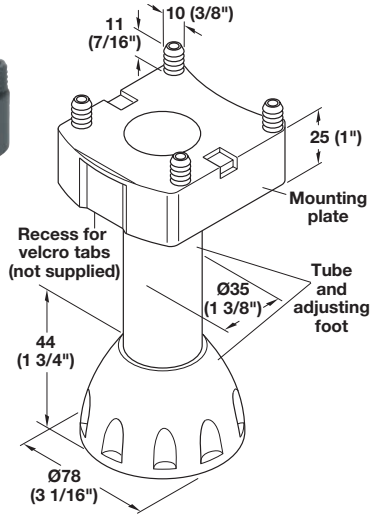

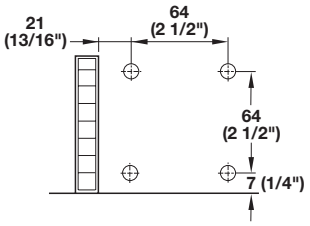

> For Ø78 mm (3 1/16") foot
> Material: Plastic; Color: black

Mounting	Item No.
Press-fit	637.79.300
Screw mounted	637.79.301

Supplied With 4 Plates

→ Adjustment Foot/Tube

> For Ø78 mm (3 1/16") round mounting plate
> Easily adjusts weights up to 150 kg (330 lbs.) per leg
> Heights listed are total, including mounting plate
> Adjustment range = -10/+18 mm
> Material: Plastic; Color: black

Base height	Item No.
80 (3 1/8")	637.80.350
100 (4")	637.80.351
120 (4 3/4")	637.80.352
150 (6")	637.80.353

Supplied With 4 Feet, 4 Tubes, Pre-mounted nails

→ Plinth Panel Clip

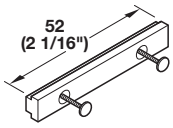

> For rectangular glide
> Material: Plastic

Color	Item No.
black	637.81.588

Supplied With 4 Panel holders, Pre-mounted nails

→ Plinth Panel Clip

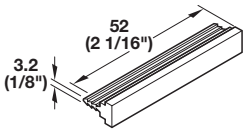

> Groove mounted; for rectangular glide
> Material: Plastic

Color	Item No.
black	637.81.590

Supplied With 4 Panel holders

→ Plinth Panel Spring

> For front plinth mounting
> Plinth panel is removable with disassembly ring
> Material: Stainless Steel

	Item No.
	637.81.330

Supplied With 20 pcs.

Dimensional data not binding. Dimensions in mm, inches are approximate. We reserve the right to alter specifications without notice.

Mounting Plates and Clips

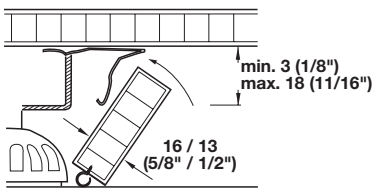

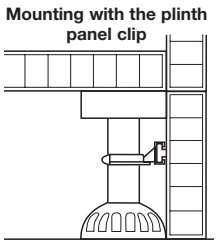

> Base heights listed are total including mounting plate, tube, and adjusting foot
> Bayonet locking of the tube in the mounting plate prevents the tube from pulling out during tilting, especially on tall cabinets
> Plinth panel attaches with the clips shown, or with Velcro applied to the mounting plate recess

→ Triangle Mounting Plate

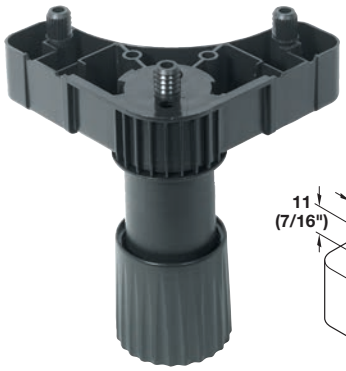

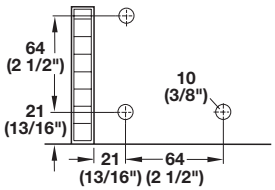

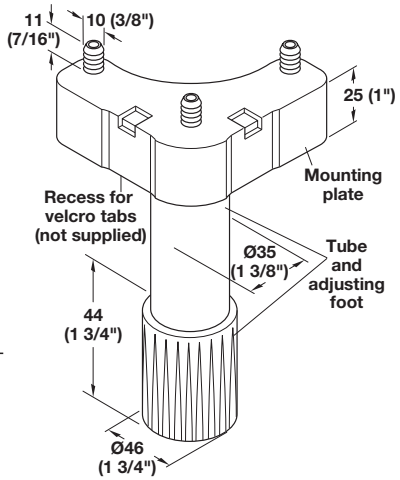

> For Ø46 mm (1 3/4") foot
> Material: Plastic; Color: black

Mounting	Item No.
Press-fit	637.79.310
Screw mounted	637.79.311

Supplied With 4 Plates

→ Adjustment Foot/Tube

> For Ø46 mm (1 3/4") triangle mounting plate
> Heights listed are total, including mounting plate
> Adjustment range = -10/+18 mm
> Weight capacity: 150 kg (330 lbs.) each leg
> Material: Plastic; Color: black

Base height	Item No.
80 (3 1/8")	637.80.360
100 (4")	637.80.361
120 (4 3/4")	637.80.362
150 (6")	637.80.363

Supplied With 4 Feet, 4 Tubes

→ Plinth Panel Clip

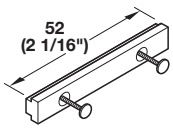

> For triangular glide
> Material: Plastic

Color	Item No.
black	637.81.589

Supplied With 4 Panel holders, Pre-mounted nails

→ Plinth Panel Clip

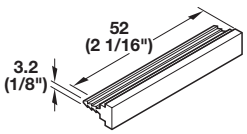

> For triangular glide
> Groove mounted
> Material: Plastic

Color	Item No.
black	637.81.591

Supplied With 4 Panel holders

→ Plinth Panel Spring

> For front plinth mounting
> Plinth panel is removable with disassembly ring
> Material: Stainless Steel

	Item No.
	637.81.330

Supplied With 20 pcs.

Dimensional data not binding. Dimensions in mm, inches are approximate. We reserve the right to alter specifications without notice.

Levelers

→ Adjustment Feet

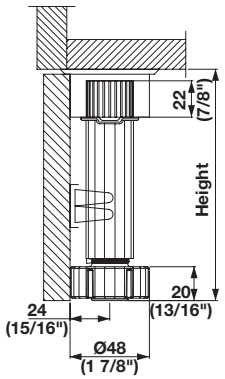

> Slots in base allow for easy adjustment with flat blade driver
> Shaft Ø: 28 mm (1 1/8")
> Adjustment range: -5/+20
> Weight capacity: 114 kg (250 lbs.) per foot
> Material: Plastic; Color: black

Base height	Item No.
80 (3 1/8")	637.19.380
100 (4")	637.19.360

Note
Height listed is total, including mounting socket.
See page **6.32** for plinth clips and M10 attachment screw.

→ Adjustment Feet

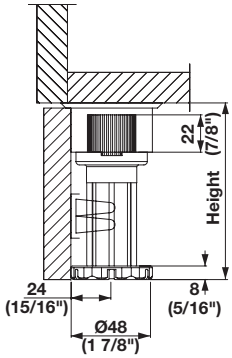

> For short applications

Base height	Item No.
50 (2")	637.86.331
70 (2 3/4")	637.86.335

Note
50 mm (2") version will not accept plinth clips.

→ Mounting Sockets

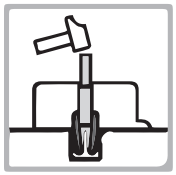

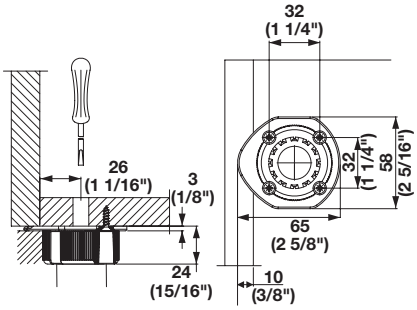

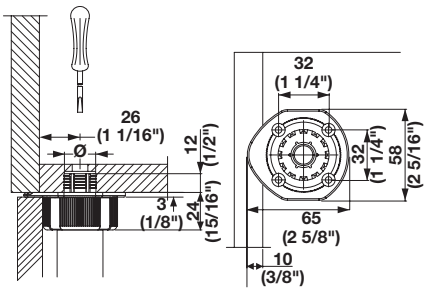

> Screw or through mounted with M10 screw or pound in with dowel
> Material: Plastic; Color: black

Mounting	Item No.
Screw mounted	637.19.964
Pound in dowel - Ø10 mm	637.19.952
Pound in dowel - Ø15 mm	637.19.954

M10 attachment screw page 6.32

Dimensional data not binding. Dimensions in mm, inches are approximate. We reserve the right to alter specifications without notice.

Levelers

→ XT Adjustment Foot

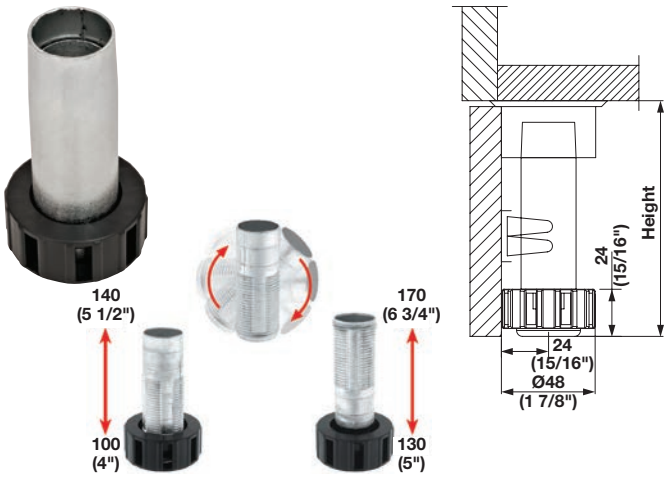

> With reversible inner threaded tube to create
> 2 height ranges: 100–140 mm (4"–5 1/2")
> 130–170 mm (5"–6 3/4")
> Choose between plastic or metal mounting sockets below
> Shaft Ø: 28 mm
> Weight capacity: 150 kg (330 lbs.) per foot
> Material: Shaft: Steel; Foot: Plastic; Color; black

	Item No.
	637.59.932

Note
Height ranges include mounting socket.
See next page for plinth clips and M10 attachment screw.

→ XT Plastic Mounting Sockets

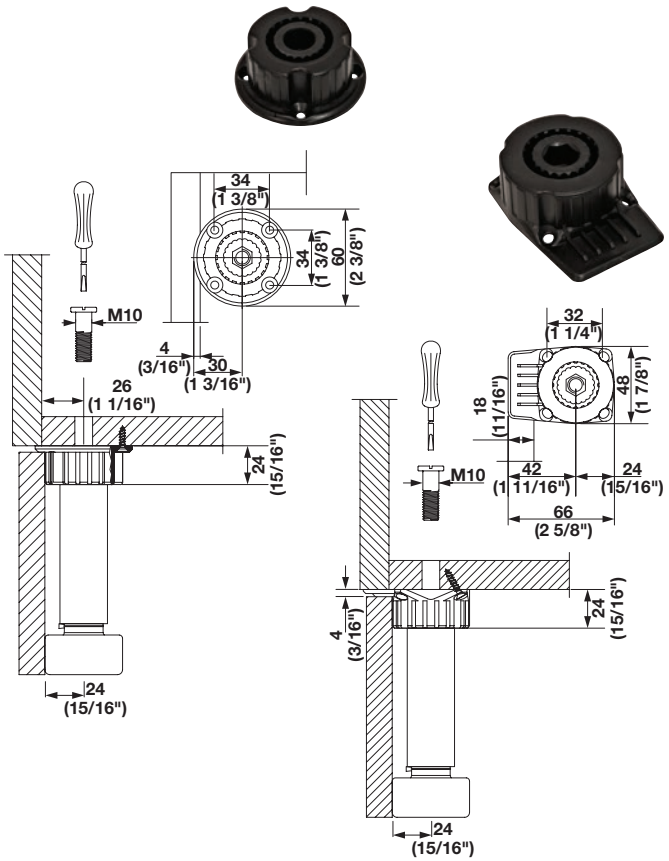

> Both versions can be screw mounted or through mounted with M10 attachment screw
> Material: Plastic; Color: black

Version	Item No.
Round	637.59.980
With additional support tab	637.59.992

→ XT Metal Mounting Sockets

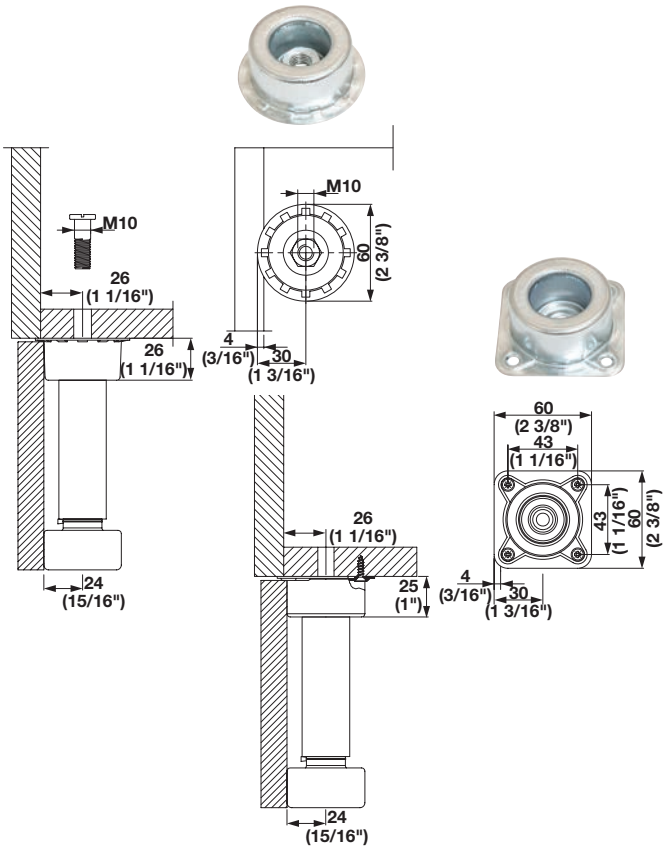

> Square is screw mounted
> Round is through mounted with M10 attachment screw
> Material: Steel

Version	Item No.
Round	637.19.020
With additional support tab	637.19.060

Dimensional data not binding. Dimensions in mm, inches are approximate. We reserve the right to alter specifications without notice.

Levelers

→ Plinth Panel Clips for Ø28 mm (1 1/8") shafts

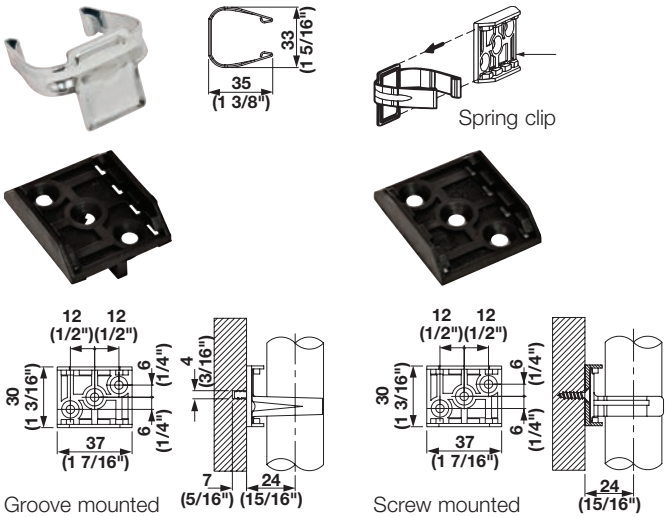

> Material: Spring Clip: Steel; Adapter: Plastic; Color: black

Description	Item No.
Spring clip	637.19.941
Groove mounted adapter	637.19.942
Screw mounted adapter	637.42.020

Note
Order spring clip and choose between screw mounted or groove mounted adapters

→ Leveler

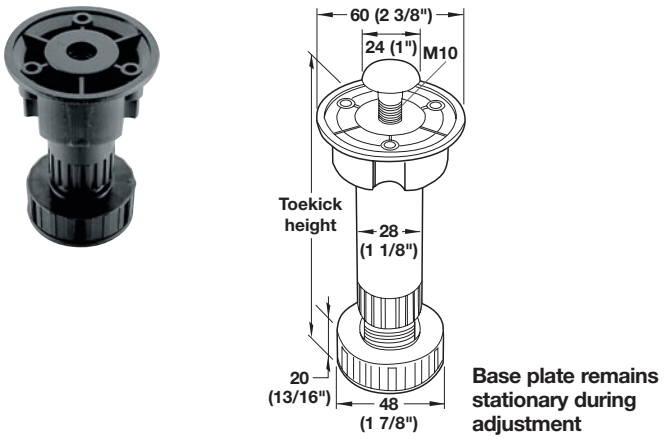

> 2-part
> 3 flat head screws can be used in place of M10 screw
> Adjustment range: -5 + 10 mm
> Weight capacity: 150 kg (330 lbs.) per leg
> Material: Plastic; Color: black

Toekick height	Item No.
80 (3 1/8")	637.45.308
100 (4")	637.45.326
120 (4 3/4")	637.45.344
150 (6")	637.45.371

→ Panel Clip for Ø28 mm (1 1/8") shafts

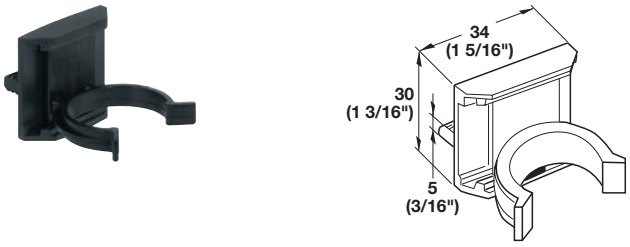

> 2-part
> Groove mounted to toekick panel
> Material: Plastic

Color	Item No.
black	637.45.915

→ Panel Clip for Ø28 mm (1 1/8") shafts

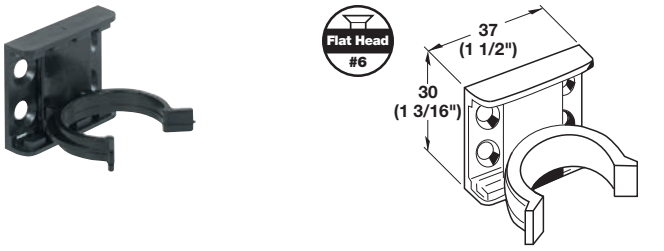

> 2-part
> Screw mounted to toekick panel
> Material: Plastic

Color	Item No.
black	637.45.906

→ Cap

> Material: Plastic

Color	Item No.
white	637.45.791

→ M10 Attachment Screw

> Material: Steel

Finish	Item No.
zinc-plated	637.45.997

Flat head screws pages 12.7-12.8, 12.10, 12.13

Dimensional data not binding. Dimensions in mm, inches are approximate. We reserve the right to alter specifications without notice.

Levelers

→ Adjuster

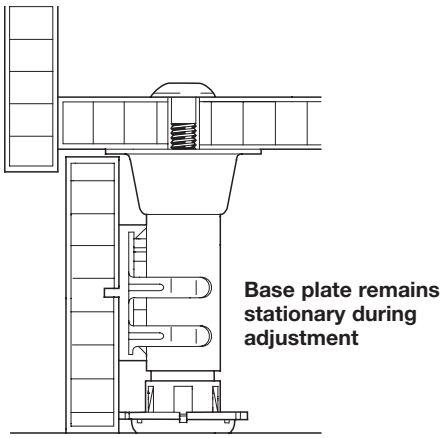

> 2-part
> M10 attachment screw with cap
> Shaft Ø: 28 mm (1 1/8")
> Material: Steel; Finish: zinc

Toekick Height	Item No.
100–120 (4"–4 3/4")	637.19.219
120–140 (4 3/4"– 5 1/2")	637.19.228
150–170 (6"–6 3/4")	637.19.237

→ Plinth Panel Clip

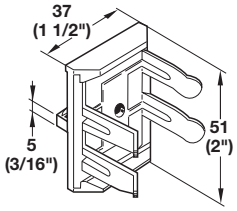

> 2-part
> Groove mounted to toekick panel
> Material: Plastic, Steel

Color	Item No.
black	637.19.915

→ Plinth Panel Clip

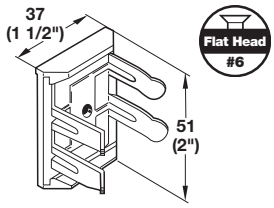

> 2-part
> Screw mounted to toekick panel
> Material: Plastic, Steel

Color	Item No.
black	637.19.906

Flat head screws pages 12.7-12.8, 12.10, 12.13

Dimensional data not binding. Dimensions in mm, inches are approximate. We reserve the right to alter specifications without notice.

Levelers

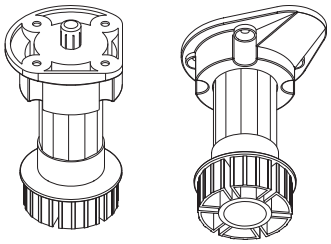

> Offers a wider range of adjustment with fewer items
> Allows for greater flexibility at installation
> Components ordered separately

→ Adjustment Foot

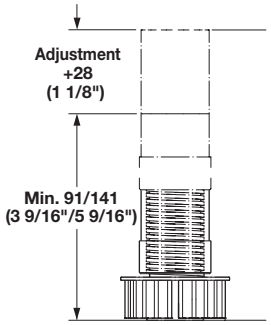

> Shaft Ø: 30 mm (1 3/16")
> Weight capacity: 113 kg (250 lbs.)
> Material: Plastic; Color: black

Base height	Item No.
91–119 (3 9/16"–4 11/16")	637.54.311
141–169 (5 9/16"–6 11/16")	637.54.313

→ Extension Tube

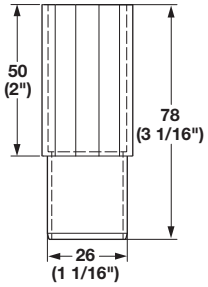

> Material: Plastic

Color	Item No.
black	637.54.320

→ Mounting Socket

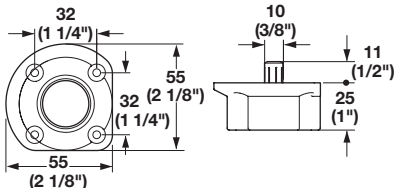

> Dowel mounted
> Material: Plastic

Color	Item No.
black	637.54.330

→ Mounting Socket

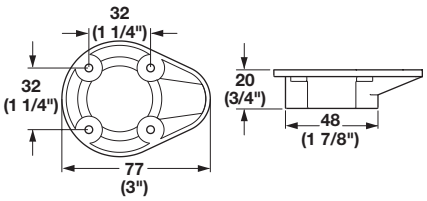

> Screw mounted
> Material: Plastic

Color	Item No.
black	637.54.335

→ Plinth Panel Clip

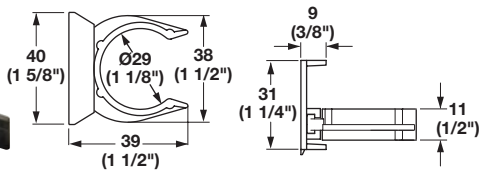

> Screw mounted to base panel
> Material: Plastic

Color	Item No.
black	637.54.340

Dimensional data not binding. Dimensions in mm, inches are approximate. We reserve the right to alter specifications without notice.

Levelers

→ Adjuster

Foot

Leveler

Threaded Star Insert

- > Specifically designed for demanding garage applications
- > Feet are coated with a special resin clear coat which is resistant to UV rays, and are salt spray tested to 200 hours vs. 72 hours for typical lacquer coatings
- > Feet can be cut to length if required, threaded star inserts are then pressed in and the leveler is installed
- > Mounting plate is welded on
- > Leveler has a swiveling base plate and adjusts with a 9/16" wrench
- > Material: Leg: Nickel-plated, brushed and resin epoxy-coated, matt
  Threaded Insert: Steel, matt
  Leveler: Steel, matt
  Foot: Nylon; Color: white

Height	Item No.
152 (6")	635.48.060
305 (12")	635.48.061

Supplied with
4 Feet, threaded inserts and levelers
16 Mounting screws, #8 x 3/4"

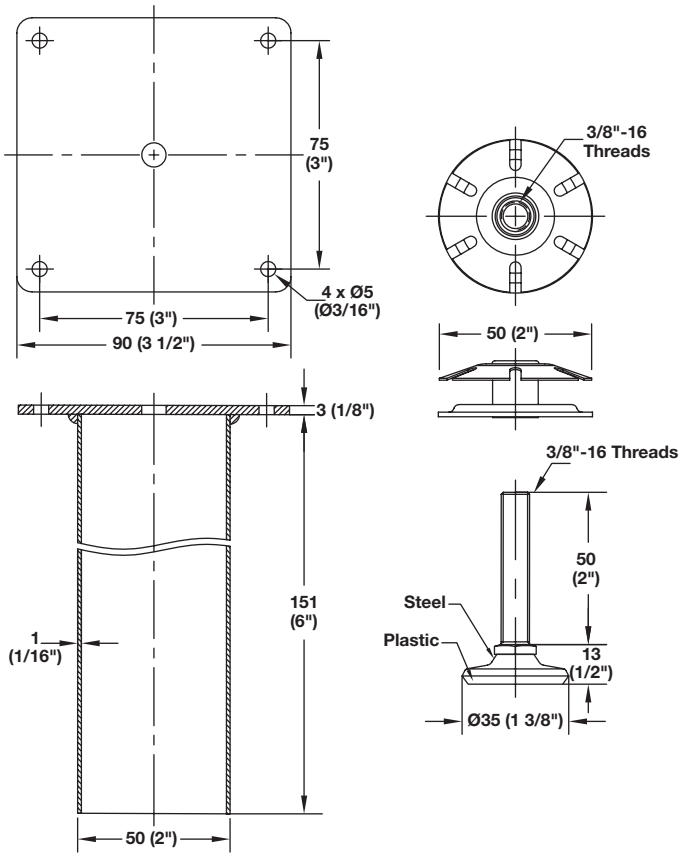

Dimensional data not binding. Dimensions in mm, inches are approximate. We reserve the right to alter specifications without notice.

Table Legs and Levelers

> For light duty applications
> Heights listed are without levelers (order separately)

→ Mini Leg

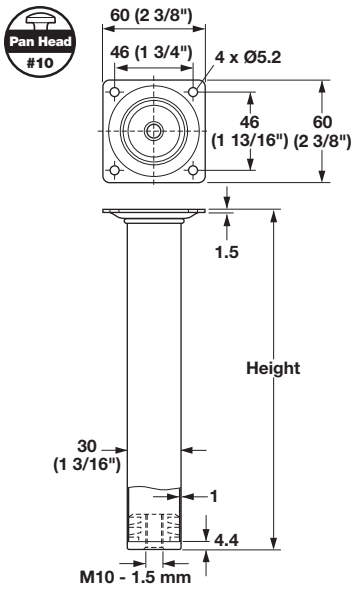

> Tube thickness: 1 mm (1/16")
> Static weight rating: approximately 30 kg (66 lbs.) per leg
> Ø: 30 mm (1 3/16")
> With M10 threaded plastic insert
> Material: Steel, epoxy-coated or polished
Insert: Plastic; Color: black

Height	black semi-gloss	polished chrome
100 (4")	635.48.310	635.48.210
150 (6")	635.48.315	635.48.215
200 (7 7/8")	-	635.48.220
500 (19 3/4")	635.48.350	635.48.250

Supplied With
4 Legs

→ M10 Base Leveler

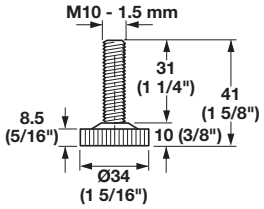

> Material: Thread: Steel; Base: Nylon; Color: black

Finish	Item No.
zinc-plated	651.01.330

→ M10 Base Leveler

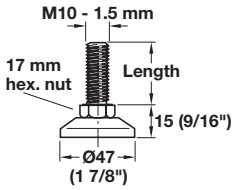

> With fixed foot
> Material: Thread: Steel; Finish: zinc-plated
Base: Nylon; Color: black

Length	Item No.
30 (1 3/16")	651.01.304
50 (1 15/16")	651.01.500

→ Base Leveler

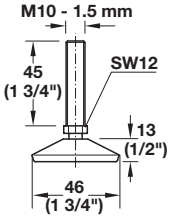

> Swivels with ball joint
> Material: Thread: Steel; Foot: Plastic; Color: black

Finish	Item No.
zinc-plated	651.00.125

Pan head screws pages 12.9-12.10

Dimensional data not binding. Dimensions in mm, inches are approximate. We reserve the right to alter specifications without notice.

Table Legs

> Square mounting plate with M10 bolt
> Leg screws into mounting plate
> Levelers are pressed-in, they can be removed and pounded back in if legs need to be cut
> Adjustment range: +25 mm (1")
> Static weight rating: approximately 100 kg (220 lbs.) per leg

→ E-Leg Ø50 (1 15/16")

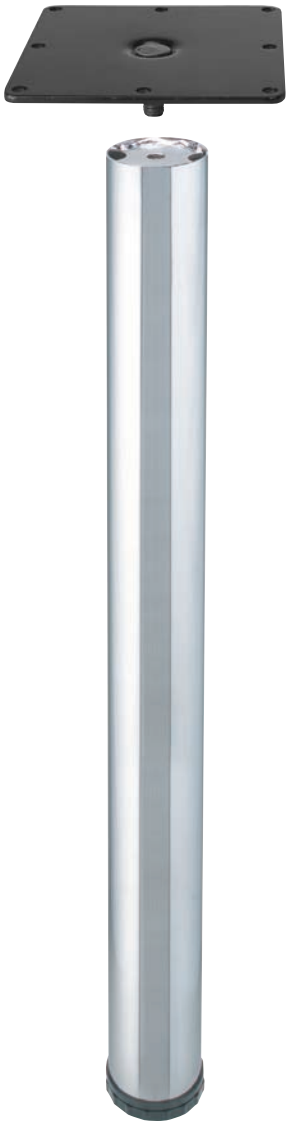

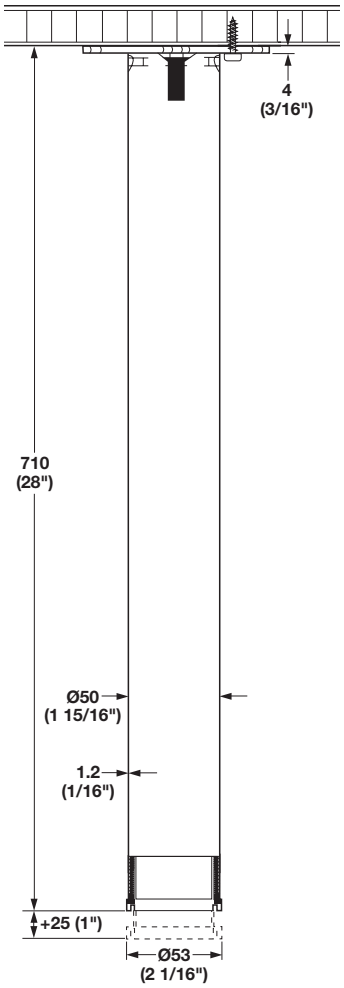

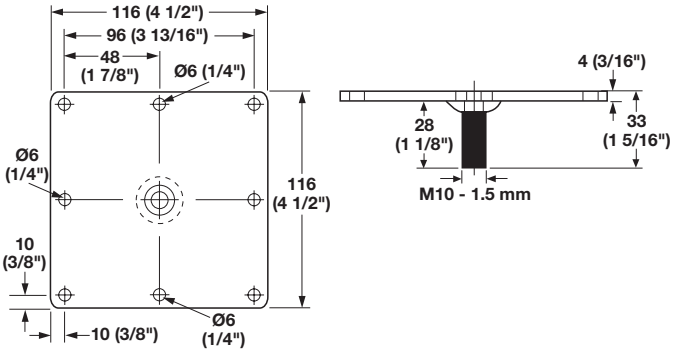

> Material: Legs: Steel, plated or epoxy-coated
> Leveler: Plastic; Color: black
> Mounting plate: Steel; Finish: black

Finish	Item No.
polished chrome	635.68.271
black textured	635.68.373
satin nickel	635.68.471
silver aluminum RAL 9006	635.68.971

Supplied With
4 Legs
4 Mounting plates
4 Levelers
Screws #9 x 1"

Note
Height includes mounting plate and leveler.

Dimensional data not binding. Dimensions in mm, inches are approximate. We reserve the right to alter specifications without notice.

Table Legs

> Square mounting plate with M10 bolt
> Leg screws into mounting plate
> Levelers are pressed-in, they can be removed and pounded back in if legs need to be cut
> Available in two heights, 711 mm (28") and 876 mm (34 1/2")
> Adjustment range: +25 mm (1")
> Static weight rating: approximately 100 kg (220 lbs.) per leg

→ E-Leg Ø60 (2 3/8")

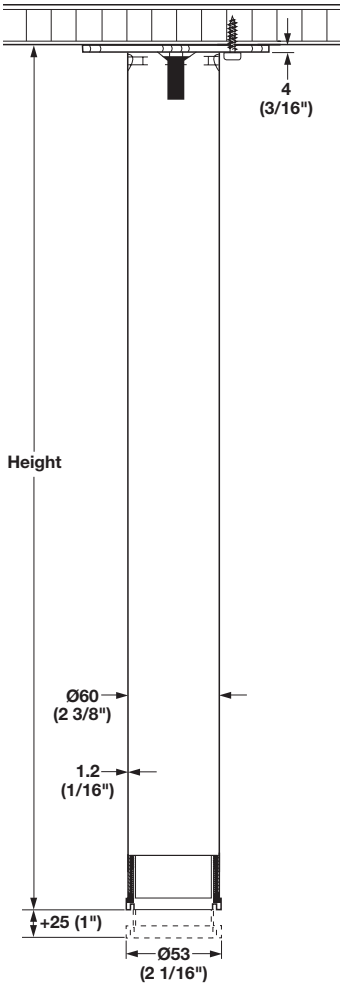

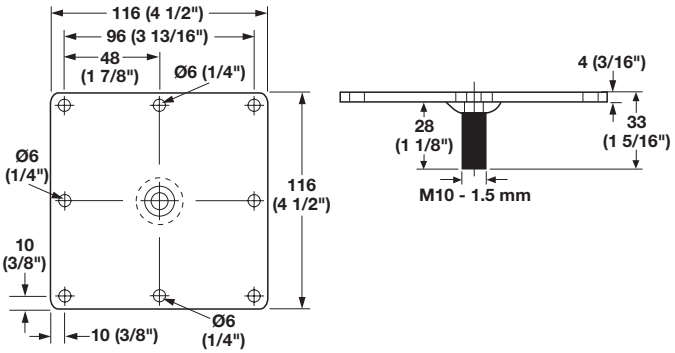

> Material: Legs: Steel, plated or epoxy-coated
> Leveler: Plastic; Color: black
> Mounting plate: Steel; Finish: black

Height	Finish	Item No.
710 (28")	polished chrome	635.61.276
	black semi-gloss	635.61.376
	black textured	635.61.378
	satin nickel	635.61.476
	silver aluminum RAL 9006	635.61.977
876 (34 1/2")	polished chrome	635.61.295
	black semi-gloss	635.61.395
	black textured	635.61.397
	satin nickel	635.61.496
	silver aluminum RAL 9006	635.61.996

Supplied With
4 Legs
4 Mounting plates
4 Levelers
Screws #9 x 26 mm (1")

Note
Height includes mounting plate and leveler.

→ Leveler Ø60 (2 3/8")

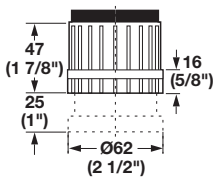

> Press-fit; offers + 26 mm (1") of adjustment
> Compressed height: 16 mm (5/8") when completely screwed down
> Material: Plastic

Color	Item No.
black	635.06.008

Supplied With
4 Levelers

Dimensional data not binding. Dimensions in mm, inches are approximate. We reserve the right to alter specifications without notice.

Table Legs For Casters

> Square mounting plate with M10 bolt
> Leg screws into mounting plate
> Total height with casters: 711 mm (28")
> Static weight rating: approximately 100 kg (220 lbs.) per leg

→ E-Leg Ø60 (2 3/8")

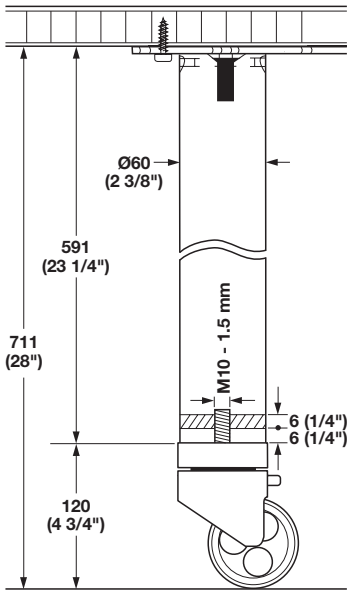

> For Ø80 mm (3 1/8") casters, below
> With M10 threaded plate for casters
> Height: 591 mm (23 1/4")
> Material: Legs: Steel, plated or epoxy-coated
Mounting plate: Steel; Finish: black

Finish	Item No.
black textured	635.60.367
satin nickel	635.60.465

Supplied With
4 Legs
4 Mounting plates
Screws #9 x 1"

→ Swiveling Caster with brake

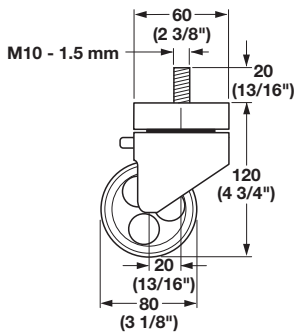

> Ø: 80 mm (3 1/8")
> With M10 threads
> Screws directly into threaded plate (washer not required)
> Weight capacity: 120 kg (264 lbs.) per caster
> Material: Body: Steel/Plastic; Wheel: Rubberized

Body/Wheel	Item No.
black/pierced black	661.29.301
black/solid black	661.29.305
silver/silver	661.29.910

Supplied With
4 Casters

Dimensional data not binding. Dimensions in mm, inches are approximate. We reserve the right to alter specifications without notice.

Table Legs - Caster Leveler System

> Use 2 legs with levelers and 2 legs with casters for a table which can be "wheel barrowed"
> Legs come with insert in bottom to accept levelers, spacers and casters, order separately
> Static weight rating: approximately 100 kg (220 lbs.) per leg
> With threaded insert
> Material: Legs: Steel, plated or epoxy-coated
Mounting plate: Steel; Finish: black; Insert: Plastic

→ E-Leg Ø60 (2 3/8")

Finish	Item No.
black textured	635.60.386
satin nickel	635.60.485
silver/aluminum RAL 9006	635.60.985

Supplied With
4 Legs
4 Mounting plates
Screws #9 x 1"

Note
Requires optional levelers, spacers or casters to be ordered separately, see next page.

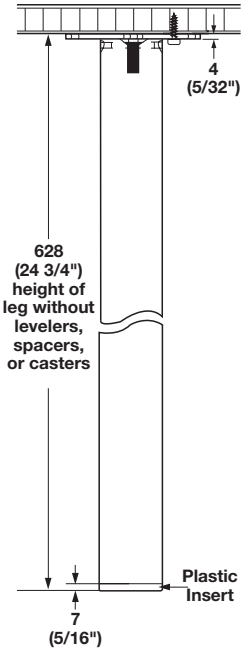

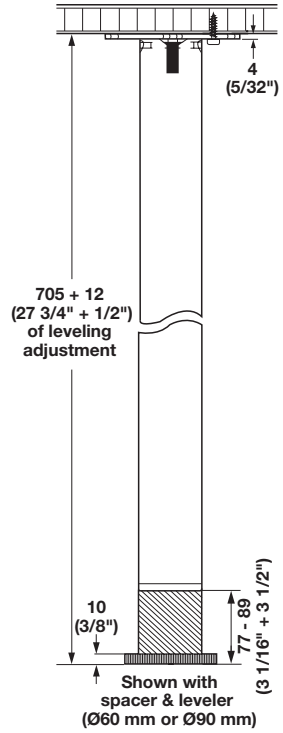

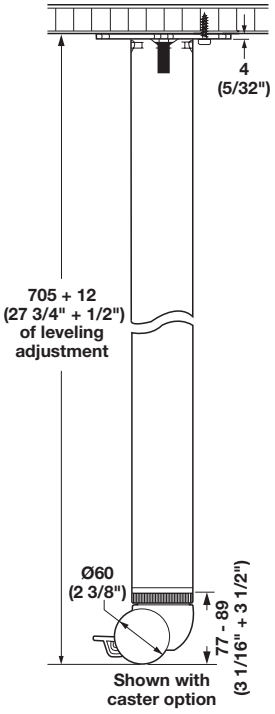

Dimensional data not binding. Dimensions in mm, inches are approximate. We reserve the right to alter specifications without notice.

Levelers and Casters

> Use 2 legs with levelers and 2 legs with casters, for a table which can be “wheel barrowed”
> Legs come with insert in bottom to accept levelers, spacers and casters, order separately
> Static weight rating: approximately 100 kg (220 lbs.) per leg

Note
To be used with legs on previous page

→ Leveler

> Height: 10 mm (3/8")
> Material: Plastic; Color: black

Ø	Item No.
60 (2 3/8")	635.01.001
90 (3 1/2")	635.01.002

→ Caster with brake

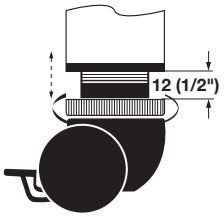

> Ø x H: 60 x 77 mm (2 3/8" x 3 1/16")
> Casters are adjustable up to 12 mm (1/2") for leveling tables on uneven floors
> Leveler plus spacer equals the same height as casters
> Material: Plastic

Color	Item No.
black	635.01.004

→ Spacer

> Ø: 60 mm (2 3/8")
> Height (leveler): 67 + 10 mm = 77 mm (2 5/8" + 3/8" = 3 1/16")
> Material: Plastic

Color	Item No.
black	635.01.003

→ Replacement Insert

> Material: Plastic

Color	Item No.
black	635.01.006

Dimensional data not binding. Dimensions in mm, inches are approximate. We reserve the right to alter specifications without notice.

Component System Ø60 (2 3/8")

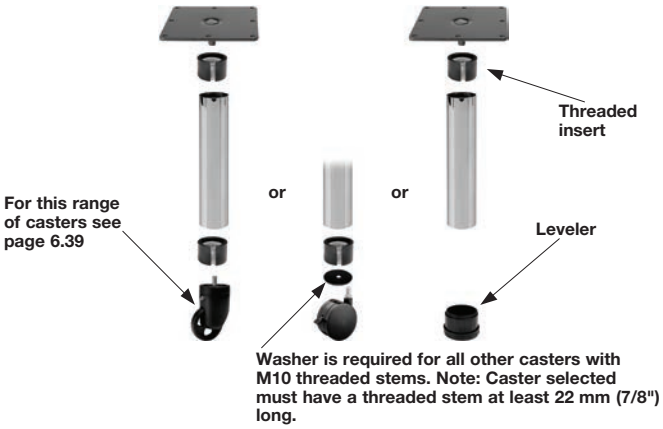

> Legs can be cut to length

Note
Various accessories are available, see next page.

→ Mounting Plate Set for E-Legs

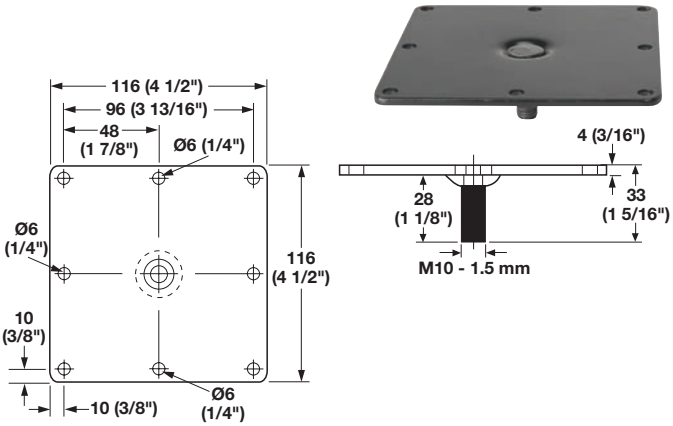

> Screw mounted
> With M10 stud
> Material: Steel, epoxy-coated

Color	Item No.
black	635.06.015

Supplied With
4 Mounting plates
Mounting screws #9 x 1"

→ Tube Ø60 (2 3/8")

> Length: 1425 mm (56")
> Material: Steel, plated or epoxy-coated

Finish	Item No.
satin nickel	635.20.066
polished chrome	635.20.266
black textured	635.20.368
silver aluminum RAL 9006	635.20.966

Dimensional data not binding. Dimensions in mm, inches are approximate. We reserve the right to alter specifications without notice.

Component System - Accessories

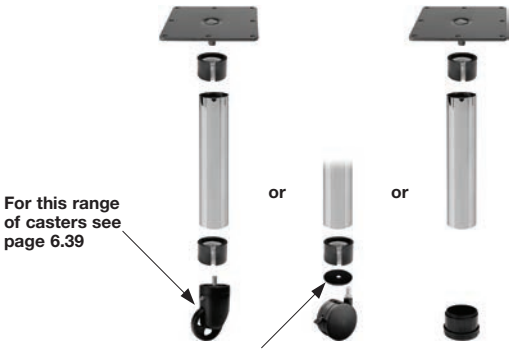

→ Height Adjuster

> Press-fit into bottom of Ø60 mm tube
> Offers 111 mm (2 3/8") of adjustment
> Compressed height: 35 mm (1 3/8"), when completely screwed down
> Fully extended height: 146 mm (5 3/4")
> Material: Plastic

Color	Item No.
black	654.35.310

Supplied With
Sleeve

→ M10 Thread Insert

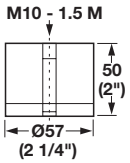

> For mounting plate and caster attachment
> Presses into top or bottom of tube
> Material: Steel/Plastic; Color: black

	Item No.
	635.06.026

Note
Caster selected must have a threaded stem at least 22 mm (7/8") long. Washer is required.

→ Leveler

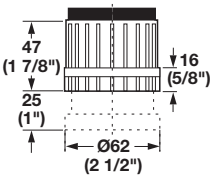

> Ø: 60 mm (2 3/8")
> Press-fit; offers + 26 mm (1") of adjustment
> Compressed height: 16 mm (5/8"), when completely screwed down
> Material: Plastic

Color	Item No.
black	635.06.009

Supplied With
4 Levelers

→ Washer

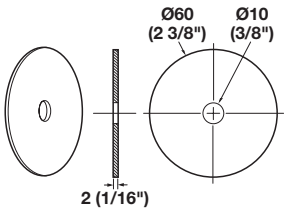

> Ø: 60 mm (2 3/8")
> For bottom of legs when used with casters
> M10 male threads required
> Material: Steel

Finish	Item No.
black	635.16.399

Casters	page 6.39
Varianta screws	page 12.16
Flat head screws	pages 12.7-12.8, 12.10, 12.13

Dimensional data not binding. Dimensions in mm, inches are approximate. We reserve the right to alter specifications without notice.

Table Legs

> Leg screws into steel square mounting plate with M10 bolt
> Levelers are pressed-in, they can be removed and pounded back in if legs need to be cut
> Adjustment range: +25 mm (1")
> Static weight rating: approximately 100 kg (220 lbs.) per leg
> Height includes mounting plate and leveler
> With adjustable foot: +25 mm (1")
> Height: 710 mm (28")
> Material: Legs: Steel, plated or epoxy-coated
Leveler: Plastic; Color: black
Mounting Plate: Steel; Color: black

→ E-Leg Ø76 (3")

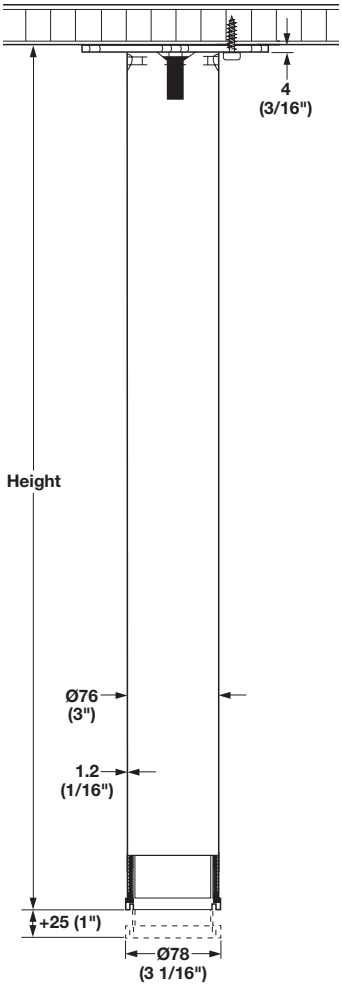

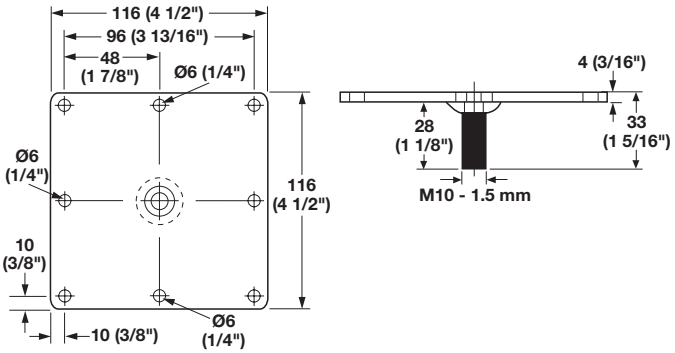

Finish	Item No.
polished chrome	635.53.271
black textured	635.53.372
satin nickel	635.53.471
silver aluminum RAL 9006	635.53.272

Supplied With
4 Legs
4 Mounting plates
Levelers
Screws #9 x 1"

Dimensional data not binding. Dimensions in mm, inches are approximate. We reserve the right to alter specifications without notice.

Table Legs

> Leg screws into square mounting plate with M10 bolt
> Leg tapers from Ø60–Ø25 mm (2 3/8"–1")
> Adjustment range: +10 mm (3/8")
> Static weight rating: approximately 100 kg (220 lbs.) per leg
> With adjustable foot: +10 mm (3/8")
> Material: Legs: Steel, plated or epoxy-coated
Leveler: Plastic; Color: black
Mounting Plate: Steel; Color: black

→ Tapered E-Leg

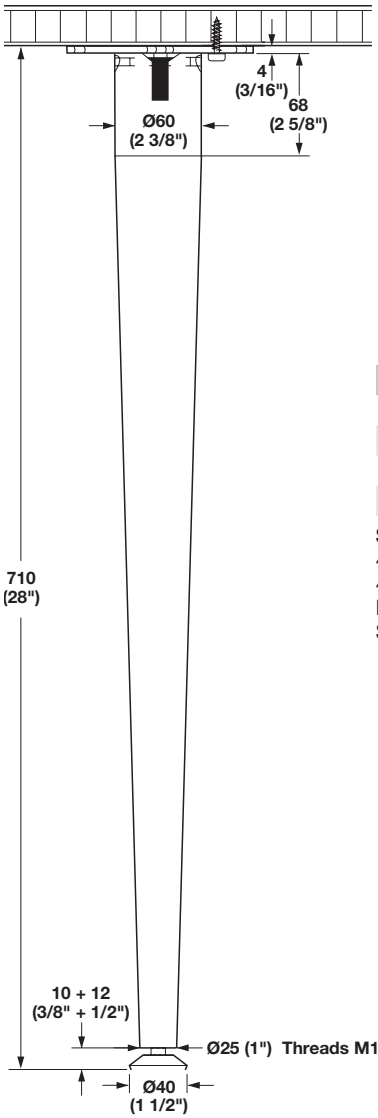

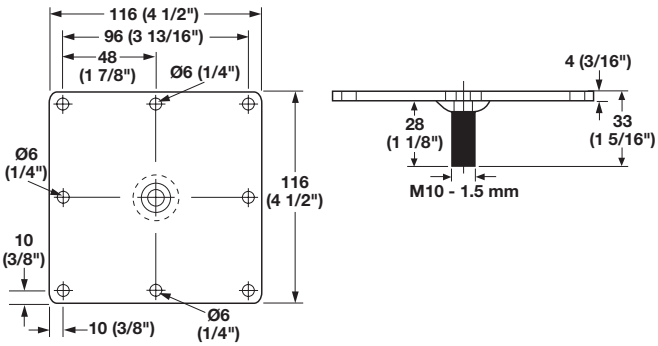

Finish	Item No.
black textured	635.37.376
satin nickel	635.37.975
silver aluminum RAL 9006	635.37.276
polished chrome	635.37.277

Supplied With
4 Legs
4 Mounting plates
Levelers
Screws #9 x 1"

Dimensional data not binding. Dimensions in mm, inches are approximate. We reserve the right to alter specifications without notice.

→ Industrial Angle Iron Legs

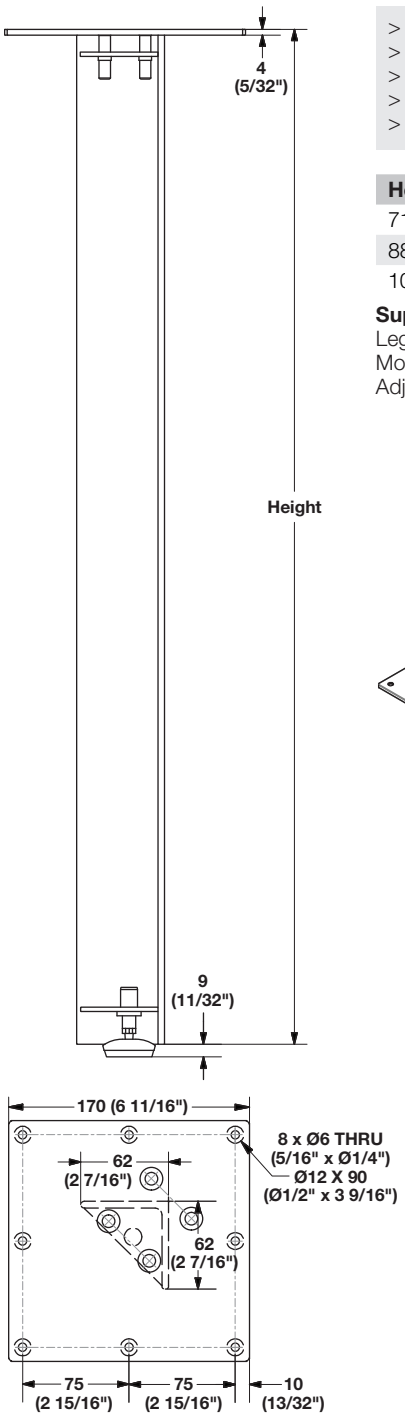

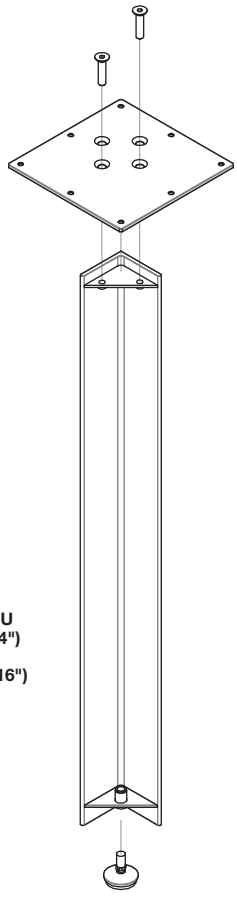

> Legs are completely raw/unfinished
> Add a vintage design to your kitchen, living room or loft spaces
> Available in three heights; dining, counter or bar height
> Adjustable leveler offers 9 mm (3/8") of adjustment
> Material: Legs; Steel, unfinished; Mounting Plate; Steel; Finish; black

Height	Item No.
716 (28 3/16")	635.70.040
883 (34 3/4")	635.70.041
1035 (40 3/4")	635.70.042

Supplied With
Leg
Mounting plate
Adjustable leveler

Dimensional data not binding. Dimensions in mm, inches are approximate. We reserve the right to alter specifications without notice.

Table Legs

→ Square Leg

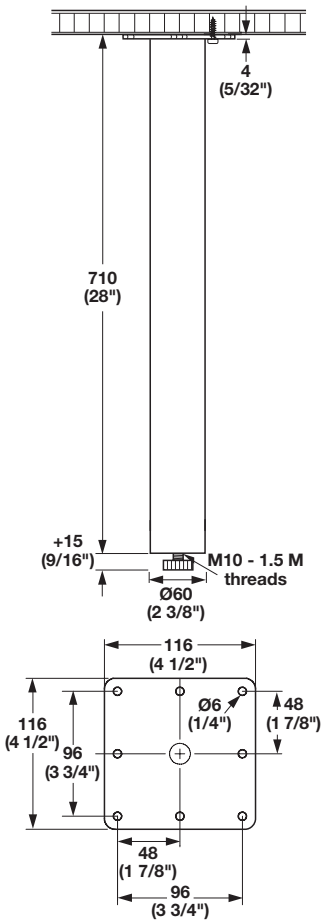

> With leveler
> Mounting plate is welded to leg
> Adjustment range: 16 mm (5/8")
> Static weight rating: approximately 100 kg (220 lbs.) per leg
> W x D: 60 x 60 mm (2 3/8" x 2 3/8")
> Material: Legs: Steel, plated or epoxy-coated
Leveler: Plastic; Color: black

Finish	Item No.
black textured	635.36.380

Supplied With
4 Legs
Screws #9 x 1"

→ Square Leg

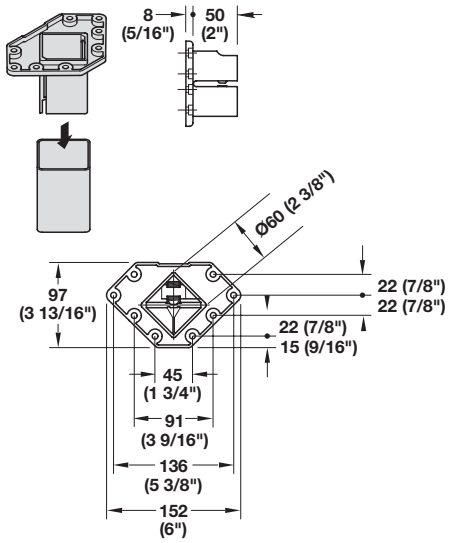

> With removable mounting plate
> Height: 705 mm (27 3/4") with 25 mm (1") adjustment leveler
> Static weight rating: approximately 100 kg (220 lbs.) per leg
> Material: Legs: Steel, plated or epoxy-coated/Aluminum
Leveler: Plastic; Color: black

Material	Finish	Item No.
Steel	polished chrome	635.59.207
	white	635.59.707
Aluminum	stainless steel look	635.59.407
	matt nickel	635.59.607

Supplied With
4 Legs
Mounting hardware

Dimensional data not binding. Dimensions in mm, inches are approximate. We reserve the right to alter specifications without notice.

Support Legs

→ Hair Pin Legs

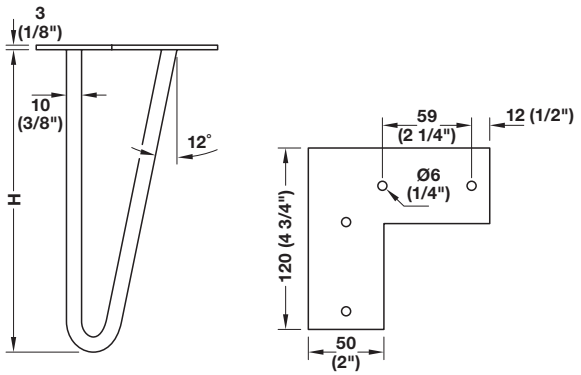

> A selection of vintage hair pin style feet and legs
> Static weight rating: approximately 50 kg (110 lbs.) per leg
> Material: Steel, powder-coated

Height H	matt black	moss gray	pearl gold
200 (7 7/8")	634.46.030	634.46.040	634.46.035
400 (15 3/4")	634.46.031	634.46.041	634.46.036
710 (28")	634.46.032	634.46.042	634.46.037

Supplied With
4 Legs

Note
Optional floor protectors are available, please order separately.

→ Floor Protectors

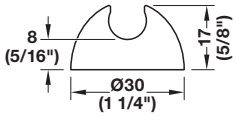

> Snap onto legs
> Material: Plastic

Color	Item No.
black	634.46.090

Supplied With
4 pcs.

Dimensional data not binding. Dimensions in mm, inches are approximate. We reserve the right to alter specifications without notice.

Support Legs

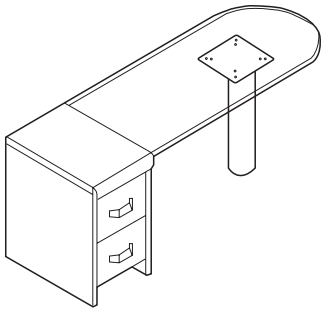

> Used as a support leg for peninsula tops
> Leveler: Ø105 mm (4 1/8") with M10 threads
> Height adjustment: 698 + 19 mm (27 1/2" + 3/4")
> Ø: 114 mm (4 1/2")
> Material: Steel, epoxy-coated
Leveler: Plastic; Color: black

→ Single Column Support Leg

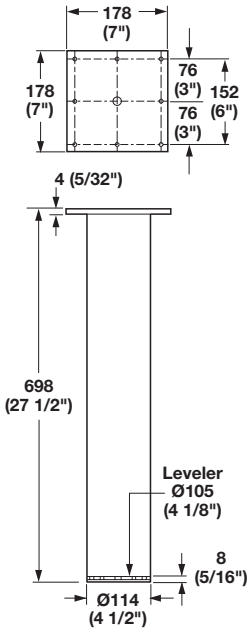

Finish	Item No.
silver/aluminum RAL 9006	635.35.271
black textured	635.35.371

Dimensional data not binding. Dimensions in mm, inches are approximate. We reserve the right to alter specifications without notice.

Side Bases

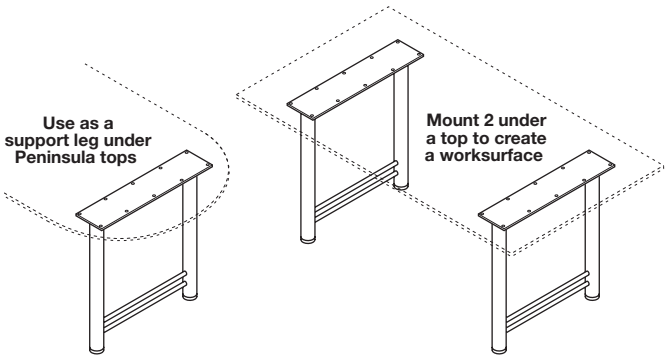

> Side bases for desks, training tables, conference tables, etc.
> Available in two sizes
> Components are welded together for maximum strength
> Individually boxed
> Material: Steel, epoxy-coated

H-Legs 450

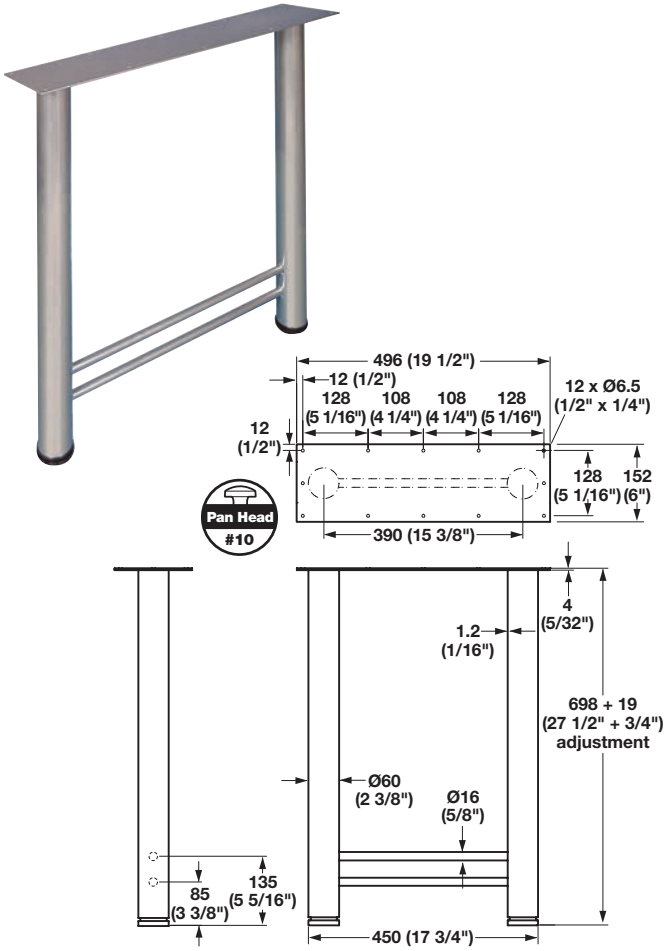

> With adjustable feet, offering 19 mm (3/4") of adjustment
> Weight capacity: 250 kg (550 lbs.)
> W x Ø: 450 x 60 mm (17 3/4" x 2 3/8")

Finish	Item No.
silver/aluminum RAL 9006	635.73.200
black textured	635.73.300

Note
Recommended for top depths: 508–711 mm (20"–28").
Top attachment screws not included.

→ H-Legs 610

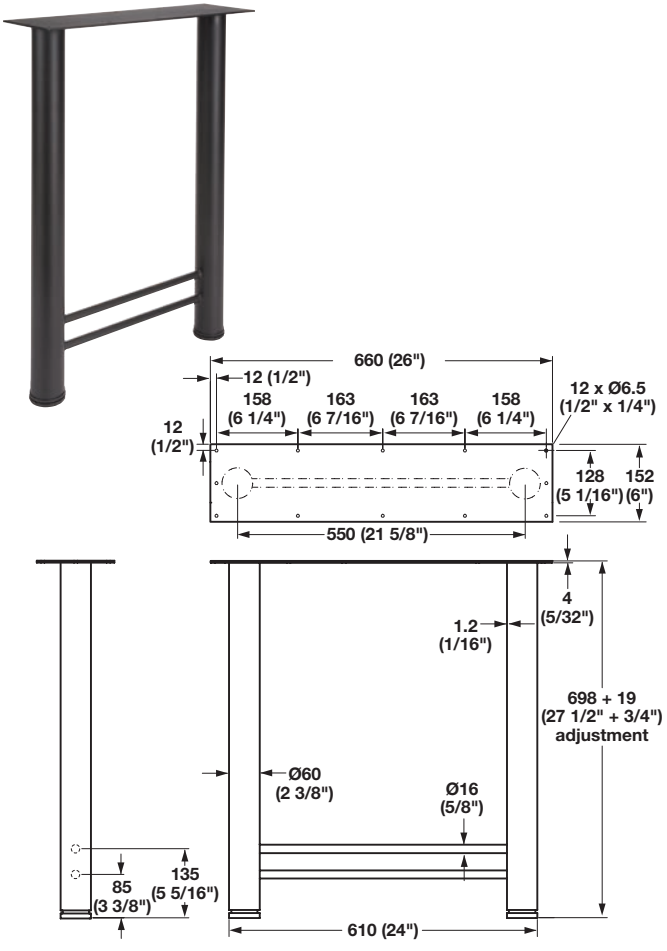

> Weight capacity: 200 kg (440 lbs.)
> W x Ø: 610 x 60 mm (24" x 2 3/8")

Finish	Item No.
silver/aluminum RAL 9006	635.73.201
black textured	635.73.301

Note
Recommended for top depths: 711–915 mm (28"–36").
Top attachment screws not included.

Pan head screws pages 12.9-12.10

Dimensional data not binding. Dimensions in mm, inches are approximate. We reserve the right to alter specifications without notice.

Support Leg

→ U-Leg

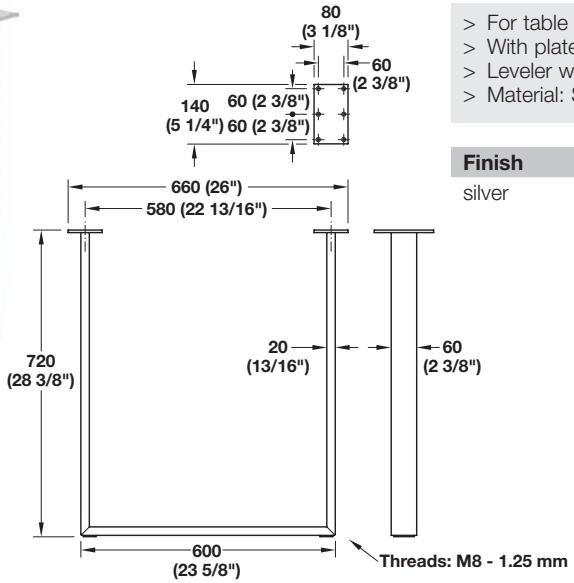

> For table and furniture bases
> With plate for attachment to table top
> Leveler with 10 mm (3/8") of adjustment
> Material: Steel

Finish	Item No.
silver	638.29.201

Pan head screws pages 12.9-12.10

Dimensional data not binding. Dimensions in mm, inches are approximate. We reserve the right to alter specifications without notice.

Folding Table Legs

→ Folding Legs

> Legs are folded by pressing the lever
> Once folded in, the legs are held securely by the interlocking springs
> The upright table is protected from accidental folding
> Includes adjustable levelers offering 12 mm (1/2") of adjustment
> Protective plastic pad included so tables can be stacked

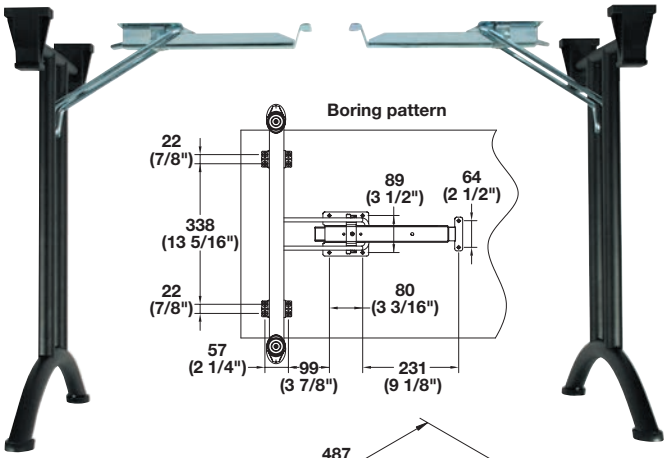

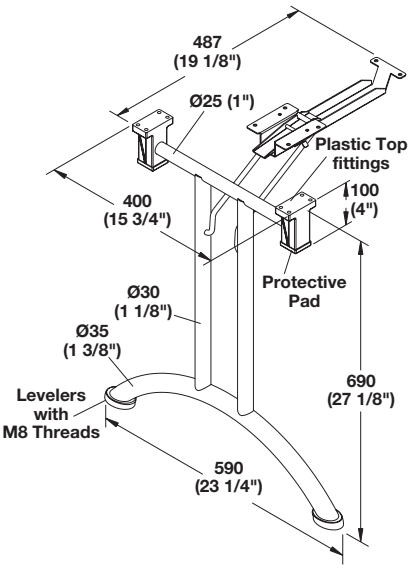

> Functional fitting interlocks when folded in or out
> Minimum table length: 1422 mm (4' 8")
> Material: Legs: Steel, plated or epoxy-coated
Functional fittings: Steel; Finish: zinc-plated
Levelers & mtg. blocks: Plastic; Color: black

Finish	Item No.
silver powder-coated	642.86.231
black semi-gloss powder-coated	642.86.321

Supplied With
2 Legs
Mounting screws

→ Round Leg

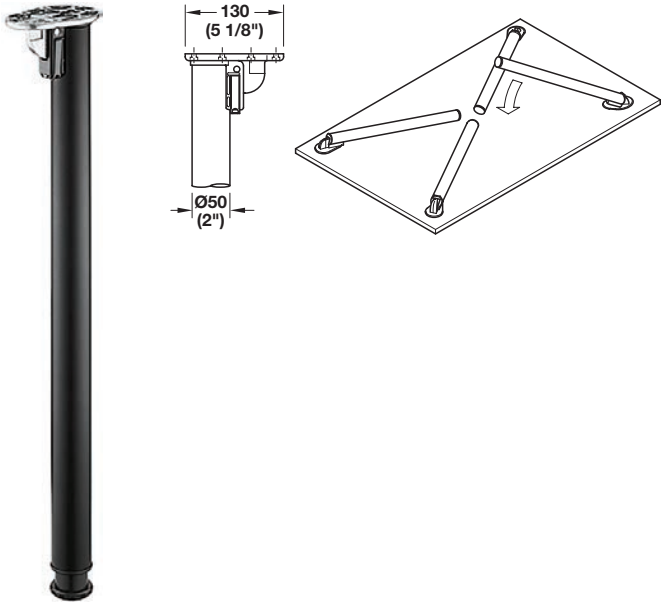

> Push in release button to fold/unfold
> Legs fold to the middle for easy storage
> Ø: 50 mm (1 15/16")
> Height: 705 mm (27 3/4")
> Leveler adjustment: 15 mm (9/16")
> Folded height of legs: 80 mm (3 3/16")
> Material: Leg: Steel; Folding plate: Zinc

Finish	Item No.
black	635.64.307

Supplied With
4 Legs

Base levelers	page 6.36
Pan head screws	pages 12.9-12.10

Dimensional data not binding. Dimensions in mm, inches are approximate. We reserve the right to alter specifications without notice.

Folding Table Legs

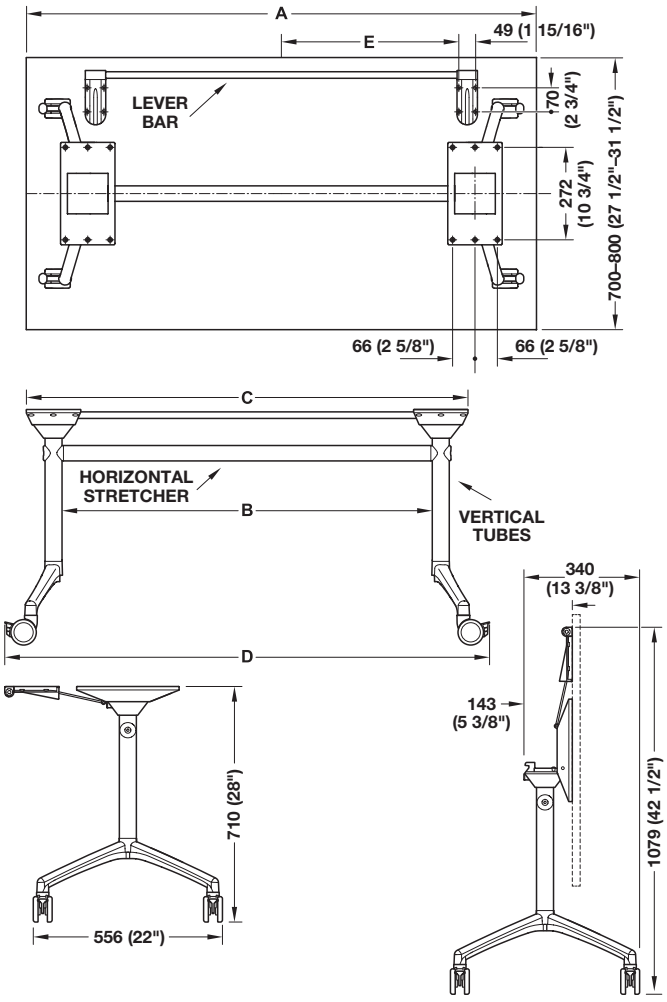

> Folding table mechanism for conference rooms, training centers, etc.
> Tables can nest together for storage
> Folds by pulling on lever bar
> Heavy duty, 150 kg (330 lbs.) weight capacity
> With 4 Ø75 mm braking casters
> Certified to European DIN EN 527-2 standard

Please order 3 parts:
1) Item 642.90.300 – feet, casters, components, assembly hardware
2) Item 642.90.350 – vertical tubes
3) Choose appropriate length of horizontal stretcher

Note
Table top not supplied

→ Feet, Casters, Components, Assembly Hardware

> Material: End Frame: Zinc Alloy; Casters: Plastic
> Finish/Color: End Frame: stainless steel effect; Casters: black

	Item No.
	642.90.300

→ Vertical Tubes

> Material: Steel; Finish: black, powder-coated

	Item No.
	642.90.350

Supplied With 2 pcs.

→ Horizontal Stretcher

> Material: Steel; Finish: black, powder-coated

Length	Item No.
680 (26 3/4")	642.90.370
880 (34 5/8")	642.90.371
1080 (42 1/2")	642.90.372

Dim. A Recommendations	Dim. B	Dim. C	Dim. D	Dim. E
1023 mm–1222 mm (40"–48")	680 mm (26 3/4")	898 mm (35 5/8")	1023 mm (40")	323 mm (12 3/4")
1222 mm–1423 mm (48"–56")	880 mm (34 5/8")	1098 mm (43 1/4")	1222 mm (48")	422 mm (16 5/8")
1423 mm–1622 mm (56"–72")	1080 mm (42 1/2")	1298 mm (51 1/8")	1423 mm (56")	523 mm (20 5/8")

Dimensional data not binding. Dimensions in mm, inches are approximate. We reserve the right to alter specifications without notice.

This page is left blank intentionally.

Dimensional data not binding. Dimensions in mm, inches are approximate. We reserve the right to alter specifications without notice.

Stainless Steel

> High quality 304 grade brushed stainless steel
> Applications: kitchens, bathrooms, garage, boats, laboratories and coastal environments where there is potential for moisture
> All legs have a wall thickness of 1.5 mm (1/16")

→ Table Leg

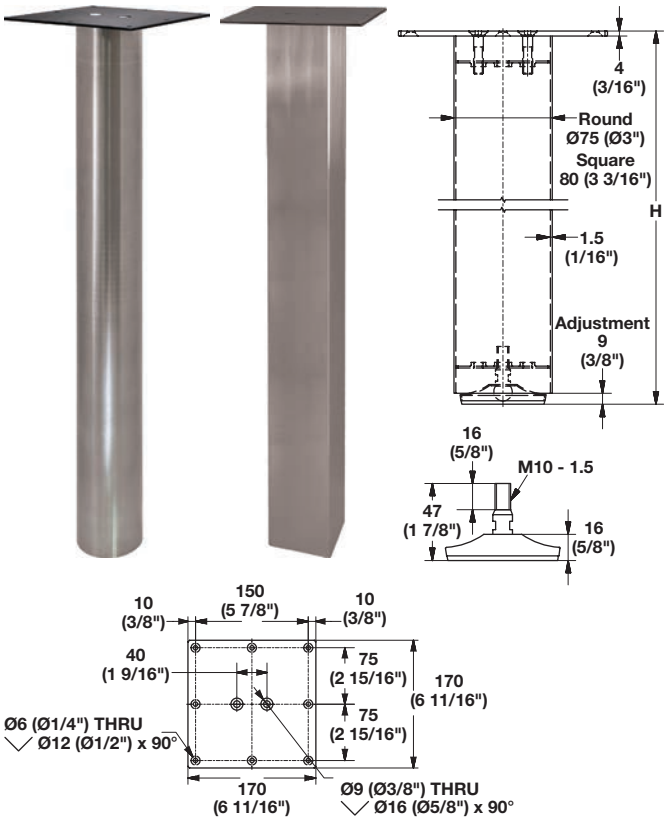

> An optional (non-adjustable) foot is available if permanent anchoring of leg is required, to the right
> Available in three heights; dining, counter or bar heights
> Adjustable leveler offers 10 mm (3/8") of adjustment
> Material: Legs: 304 Stainless Steel
Mounting Plate: Steel; Finish: black powder-coated

Height	Round Ø60 mm (2 3/8")	Round Ø75 mm (3")	Square 50 mm (2")	Square 80 mm (3 3/16")
716 (28 3/16")	635.70.003	635.70.000	635.70.013	635.70.010
883 (34 3/4")	635.70.004	635.70.001	635.70.014	635.70.011
1035 (40 3/4")	635.70.005	635.70.002	635.70.015	635.70.012

Supplied With
Leg, Mounting plate, Adjustable leveler

→ Anchoring Foot, optional

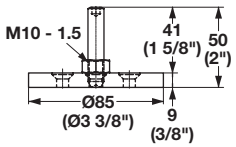

> Non-adjustable foot allows for permanent anchoring of table leg series (round and square).
> Ideal option for supporting solid surface tops when both upper and lower portion of the leg needs to be anchored securely
> Material: Stainless Steel

	Item No.
	635.70.093

→ Mini Leg

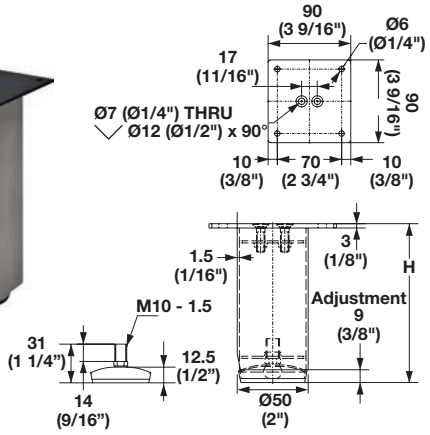

> 50 mm (2") square or round cross section
> Adjustable leveler offers 10 mm (3/8") of adjustment
> Material: Legs: 304 Stainless Steel
Mounting Plate: Steel; Finish: black powder-coated

Height	Round	Square
100 (4")	635.70.020	635.70.030
152 (6")	635.70.021	635.70.031
203 (8")	635.70.022	635.70.032

Supplied With
Leg, Mounting plate, Adjustable leveler

Dimensional data not binding. Dimensions in mm, inches are approximate. We reserve the right to alter specifications without notice.

Stainless Steel

→ Fixed Column

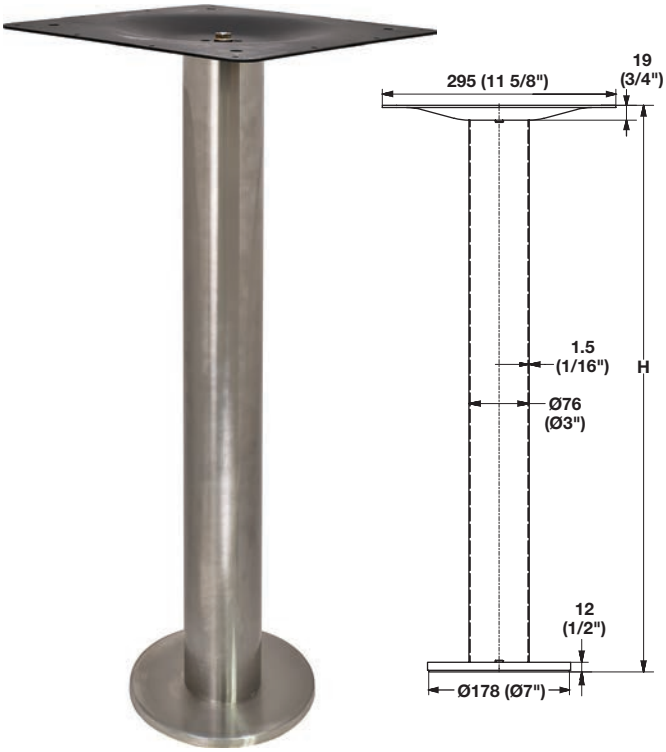

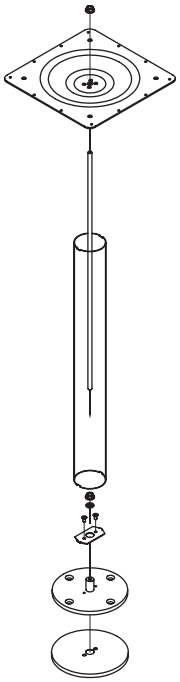

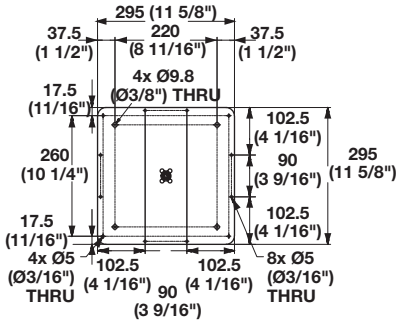

> Bolt-down
> Ideal for countertop and/or bar supports
> Column Ø: 75 mm (3")
> Base Ø: 178 mm (7")
> Material: Steel

Height	Item No.
716 (28 3/16")	635.70.090
883 (34 3/4")	635.70.091
1035 (40 3/4")	635.70.092

Supplied With
Leg
Modular components

Dimensional data not binding. Dimensions in mm, inches are approximate. We reserve the right to alter specifications without notice.

Adjustable – KOYO

The KOYO system is a revolutionary modular solution to help meet today's need for flexibility within our work environments. Fast, safe, and easy operation with excellent adjustment range. The system offers an economic, ergonomic, mechanical alternative to electric or pneumatic systems. Available in mobile or stationary solutions with choice of casters or levelers.

Operates on a step-by-step ratchet system. There are 15 settings, 20 mm (13/16") apart which equal a total adjustment range of 300 mm (11 3/4"). When the leg reaches the highest setting, light force is applied slowly returning the leg to the lowest setting. There is no sudden drop back to the low position.

Available with adjustable casters or glides.
Two methods of raising table:
1. Step on leveler or caster, then lift table top.
2. Hold table leg with one hand, then lift table. The KOYO leg is an ideal solution where adjustability is only needed periodically.

The KOYO system has many applications such as: office/contract, training rooms, healthcare, laboratories, hotels, schools, libraries, and residential furniture.

Dimensional data not binding. Dimensions in mm, inches are approximate. We reserve the right to alter specifications without notice.

KOYO Adjustable System

→ Leg Ø60 mm

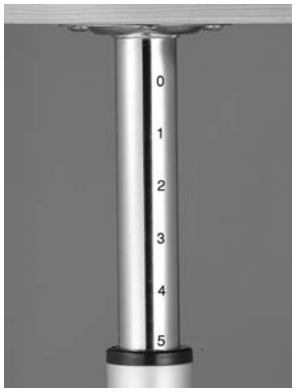

Note
Legs are conveniently marked with a scale to keep track of height level. Leveler plus spacer equals the same height as casters 77 mm (3 1/16").

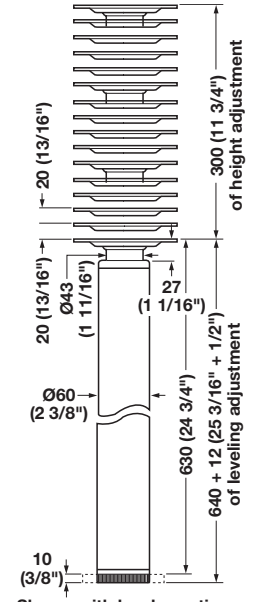

Shown with leveler option Ø60 or Ø90 (2 3/8" or 3 9/16")

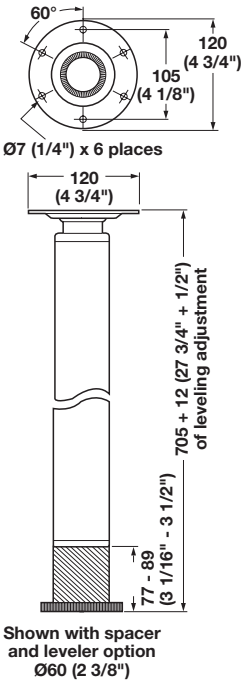

Shown with spacer and leveler option Ø60 (2 3/8")

> Meets or exceeds ANSI/BIFMA requirements
> Please note that each leg must be adjusted separately
> Static weight capacity exceeds 227 kg (500 lbs.) per leg
> Ø: 60 mm (2 3/8")
> Height adjustment: 300 mm (11 3/4")
> Minimum height with leveler installed: 640 mm (25 3/16")
> Maximum height: 940 mm (37"); spacers/casters add to this height accordingly
> Material: Legs: Steel, epoxy-coated
Mtg. plate & inner column: Steel, chrome-plated

Finish	Item No.
silver/aluminum RAL 9006	635.01.271

Supplied With
4 Legs, 4 Mounting plates

Note
Mounting screws not included. 6 pcs. per leg required.
Levelers, spacers, and casters are sold separately.

→ Caster with brake Ø60 mm

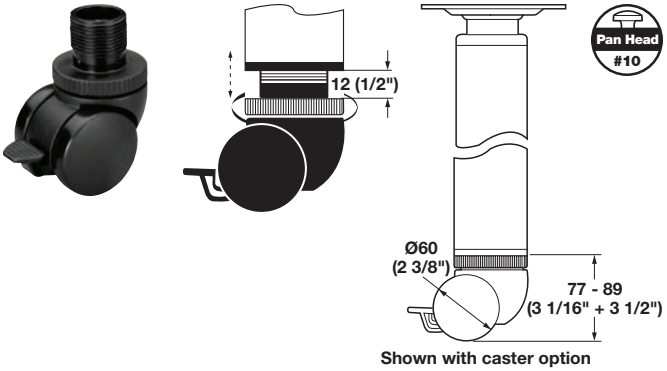

Shown with caster option

> Ø x H: 60 x 77 mm (2 3/8" x 3 1/16")
> Casters are adjustable up to 12 mm (1/2") for leveling tables on uneven floors
> Leveler plus spacer equals the same height as casters
> Material: Plastic

Color	Item No.
black	635.01.004

→ Leveler

> Height: 10 mm (3/8")
> Material: Plastic; Color: black

Ø	Item No.
60 (2 3/8")	635.01.001
90 (3 1/2")	635.01.002

→ Spacer

> Ø: 60 mm (2 3/8")
> Height (leveler): 67 + 10 mm = 77 mm (2 5/8" + 3/8" = 3 1/16")
> Material: Plastic

Color	Item No.
black	635.01.003

Pan head screws pages 12.9-12.10

Dimensional data not binding. Dimensions in mm, inches are approximate. We reserve the right to alter specifications without notice.

KOYO Adjustable System

Note
Please order components separately:
A - Adjustable column
B - Bases
C - Bolt pack
Shown below with components completely assembled

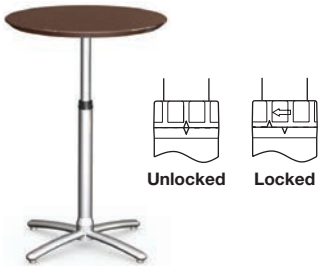

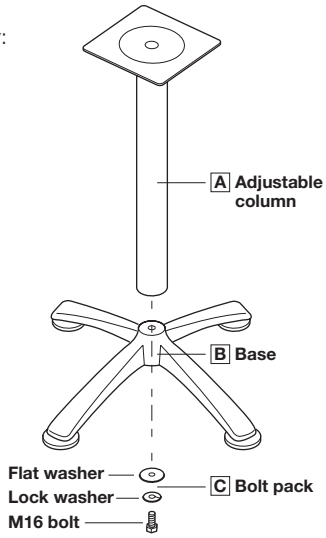

> Operates on a step by step ratcheting system
> Consists of 15 settings, 20 mm (13/16") apart which equal a total adjustment range of 300 mm (11 3/4")
> When the leg reaches the highest setting, light force is applied slowly returning the leg to the lowest setting
> Designed for small diameter tops, not to exceed Ø711 mm (28")
> Bolts directly to floor for speaking pedestals, boats, RVs, etc.
> Weight capacity exceeds: 227 kg (500 lbs.) per leg

→ A - Column

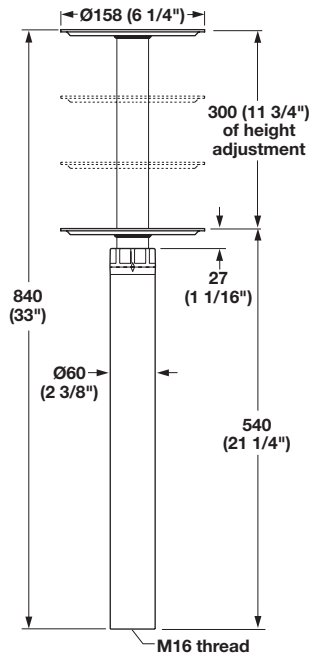

> Welded M16 nut in bottom of column allows for mounting of pedestal bases using bolt pack, ordered separately, right
> Includes internal anti-rotation mechanism
> Locking ring feature secures column in adjusted setting when the pedestal is being moved
> Material: Legs: Steel, plated
Mounting plate/inner column: Steel; Finish: chrome-plated

Finish	Item No.
chrome polished	638.39.215

→ B - Spider Base

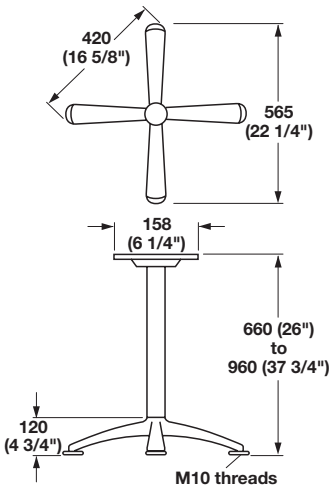

> With adjustable feet
> Material: Zinc die-cast, plated

Finish	Item No.
chrome polished	638.39.230

→ C - Bolt Pack

> M16 x 50 mm
> Material: Steel, galvanized

Finish	Item No.
chrome polished	630.00.001

Supplied With
Bolt
Lock
Flat washer

Dimensional data not binding. Dimensions in mm, inches are approximate. We reserve the right to alter specifications without notice.

Table Legs

→ Pull-Out Table Fitting with Folding Leg

> For kitchen and living room furniture
> Install in place of a drawer for a uniform front design
> Seats up to 7 people
> Internal installation depth: ≥562 mm (22 1/8")
> Internal installation height: Dim. H = 83 mm (3 1/4") + 3 x table top thickness
> Weight capacity: approximately 60 kg (132 lbs.)
> Material: Guide profiles: Aluminum; Finish: silver colored anodized
Table leg: Steel; Finish: white aluminum

Internal installation width	Item No.
562 (22 1/8")	642.19.927
862 (34")	642.19.928
1162 (45 3/4")	642.19.929

Note Table top not supplied.
Please order folding table hinges separately; see pages 9.80, 9.81, 9.94 for available options.

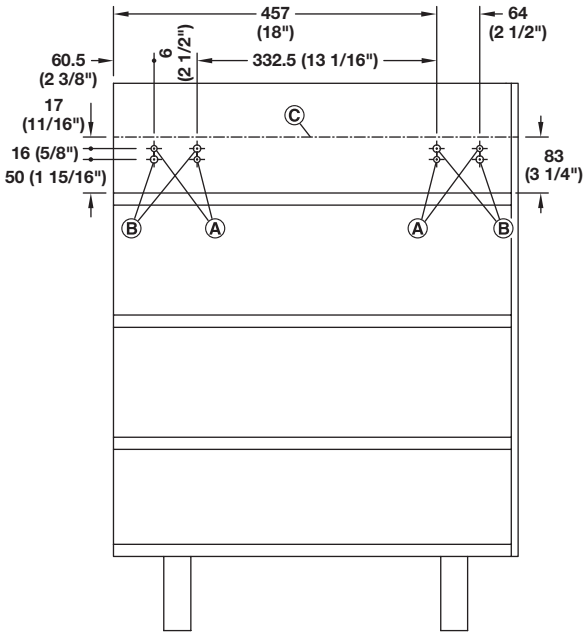

Side view

Ⓐ Ø8 mm (5/16"), depth: 13 mm (1/2")
Ⓑ Ø10 mm (3/8"), depth: 5 mm (3/16")
Ⓒ Top edge of fitting

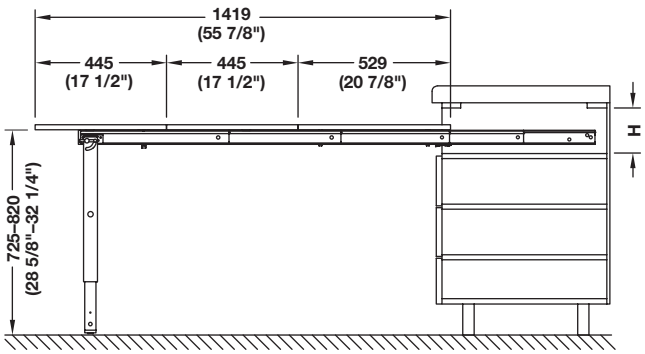

Dimensional data not binding. Dimensions in mm, inches are approximate. We reserve the right to alter specifications without notice.

Essential 2 - Electric Adjustable Table Base with Collision Mitigation Sensor

The Essential 2 table base system is the ultimate cost effective adjustable table system. German engineered and assembled in the USA. Essential 2 now features a Gyro Sensor which ensures protection in the event of a collision during the stroke of the table.

> Maximum weight capacity: 113 kg (250 lbs.) including weight of top
> Recommended for: Top widths: 1219–1828 mm (48"–72")
Top depths: 610–762 mm (24"–30")
> Simple assembly
> Height range: 660–1143 mm (26"–45") = 483 mm (19") stroke
> Speed: 1.375" per second
> Power consumption: <0.3W
> Noise level: < 50DB
> Meets BIFMA X5.5 standards
> UL 962 approved
> Available in Black, Silver or White
> Choose from simple Up/Down switch or 4-Setting programmable switch
> Anti-sag bar recommended for tops over 1549 mm (61") wide

Note
Weight rating is based on:
- An evenly distributed load over table top.
- Table base constructed using specified components; columns, feet and top supports.

Please provide at least 25 mm (1") space between table top and any adjoining surfaces, cabinets, etc.

→ Essential 2 Base

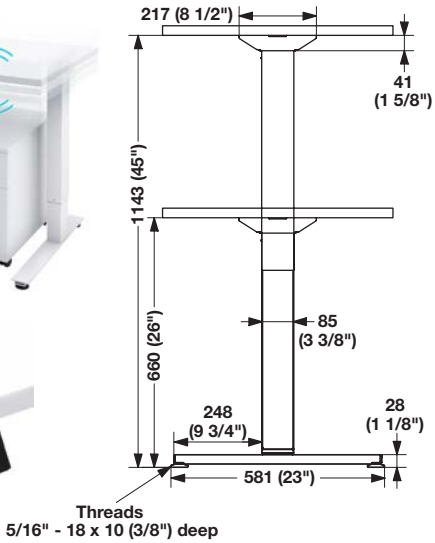

> With simple up/down switch

Finish	Item No.
black	630.46.390
silver	630.46.391
white	630.46.392

Supplied With
2 Adjustable columns
Control box
Switch
Cables
Assembly hardware

> With 4-setting programmable switch

Finish	Item No.
black	630.46.393
silver	630.46.394
white	630.46.395

Supplied With
2 Adjustable columns
Control box
Switch
Cables
Assembly hardware

→ Anti-Sag Bar, optional

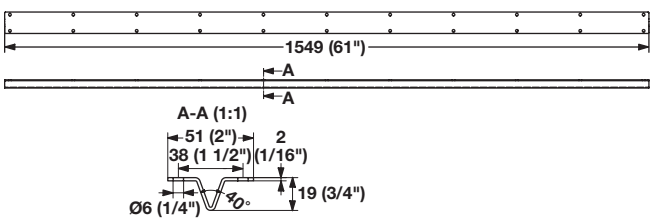

> For tops over 1549 mm (61") wide to keep top from sagging

Finish	Item No.
black	630.46.382

Supplied With
Wood screws

Dimensional data not binding. Dimensions in mm, inches are approximate. We reserve the right to alter specifications without notice.

Adjustable Columns

→ Single Adjustable Column

- > For small top applications such as speaking pedestals
- > With 4-setting programmable switch
- > With a 3-stage adjustable column
- > Screw mounts to a panel
- > Height range: 530–1197 mm (20 7/8"–47 1/8"), not including top thickness
- > Stroke: 667 mm (26 1/4")
- > Travel speed: 40 mm (1 1/2") per second
- > Weight capacity: 77 kg (170 lbs.) including work surface
- > Material: Steel, epoxy-coated

Finish	Item No.
silver RAL 9006	637.45.292
black RAL 9011	637.45.293

Supplied With
1 adjustable column and top support with welded on mounting bracket
Single port control box
Programmable switch
Wiring and assembly hardware

Note
The single column cannot be paired or synchronized with additional columns.

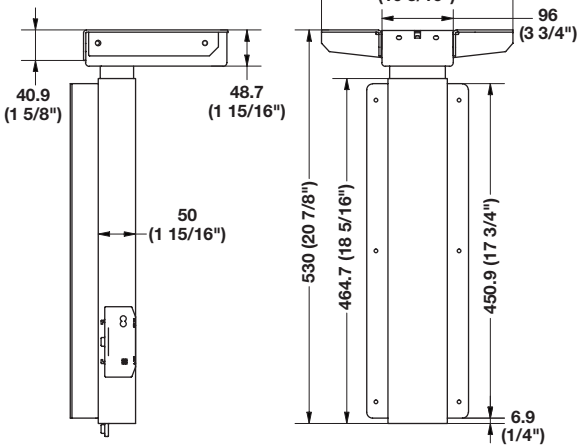

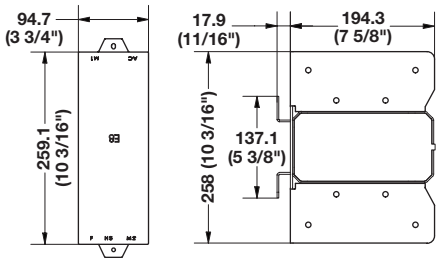

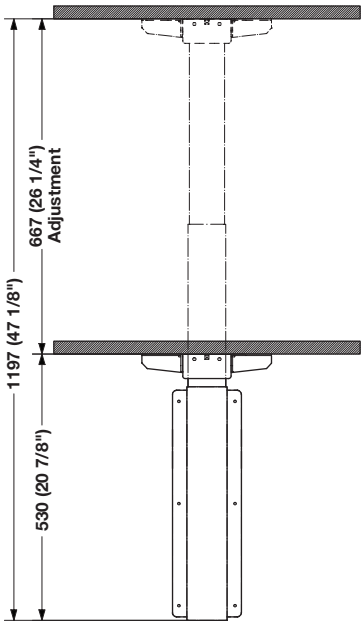

Dimensional data not binding. Dimensions in mm, inches are approximate. We reserve the right to alter specifications without notice.

Adjustable Columns

→ Double Column Side Mounted System

- > Screw mounts between two side panels
- > Has an adjustable support channel, width adjusts from 1080–1803 mm (42 1/2"–71")
- > With 4-setting programmable switch
- > Has 3-stage adjustable columns
- > Height range: 530–1197 (20 7/8"–47 1/8"), not including top thickness
- > Stroke: 667 mm (26 1/4")
- > Travel speed: 40 mm (1 1/2") per second
- > Weight capacity: 127 kg (280 lbs.) including work surface
- > Material: Steel, epoxy-coated

Finish	Item No.
silver RAL 9006	637.45.294
black RAL 9011	637.45.295

Supplied With
2 adjustable columns with welded on mounting brackets
Top supports and adjustable support channel
Double port control box
Programmable switch
Wiring and assembly hardware

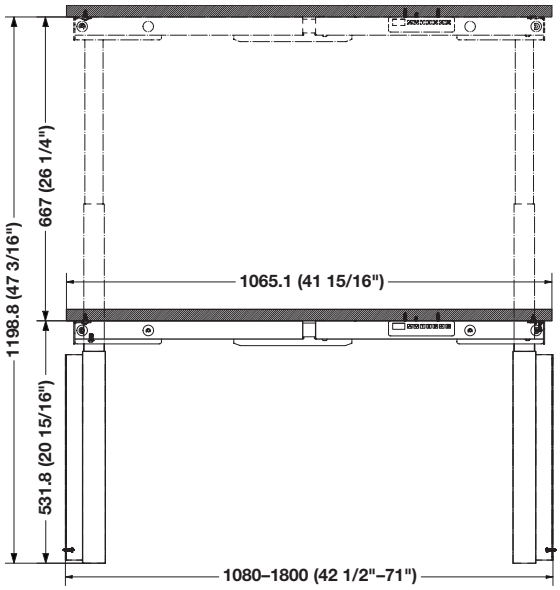

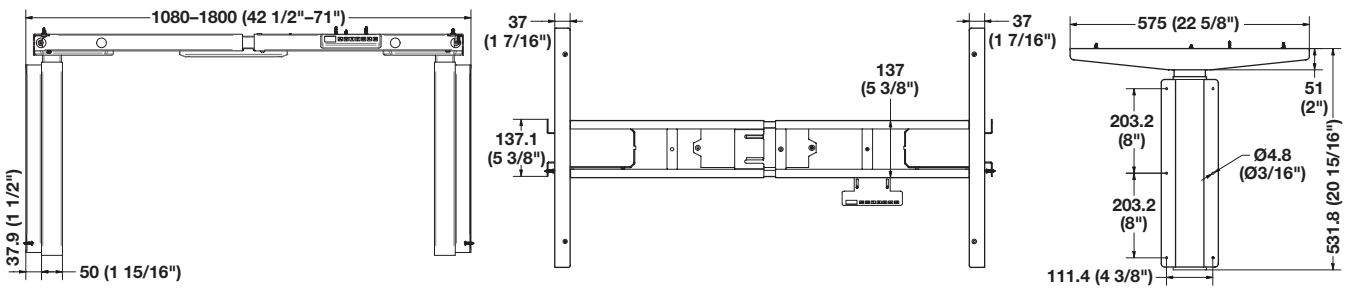

Dimensional data not binding. Dimensions in mm, inches are approximate. We reserve the right to alter specifications without notice.

Backrest Bracket

> Screw mounts under the seat

→ Backrest Bracket

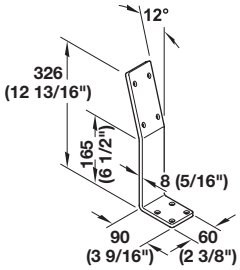

Material	Finish	Item No.
Stainless steel	brushed	638.26.030
Steel	polished chrome-plated	638.26.230
	black	638.29.054

Dimensional data not binding. Dimensions in mm, inches are approximate. We reserve the right to alter specifications without notice.

QuickClick Furniture Glides

> The QuickClick program is an innovative furniture glide system where different glides can be inserted into various bases depending on the surface on the floor
> Glides simply snap into bases
> Can be removed with a small flat blade screwdriver and replaced as needed

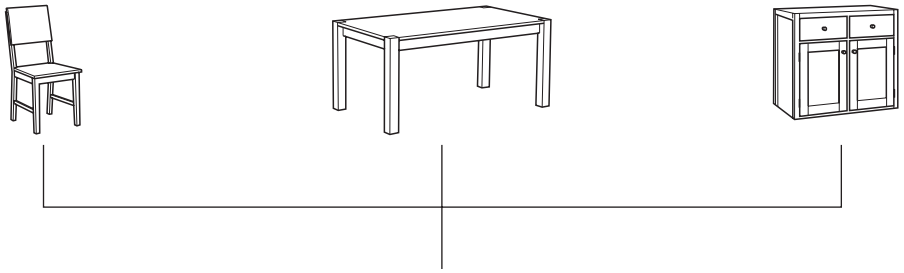

→ Installation of Base Element Ⓐ and Glide Ⓑ

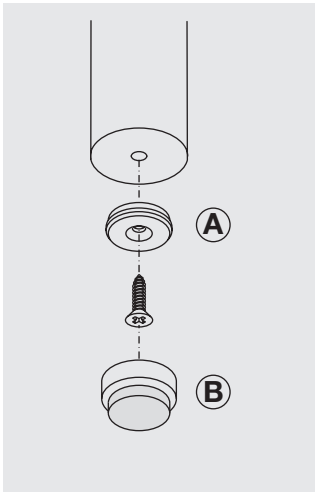

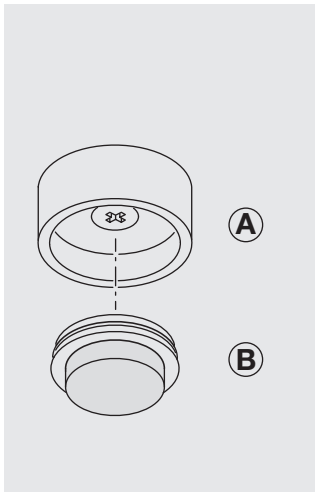

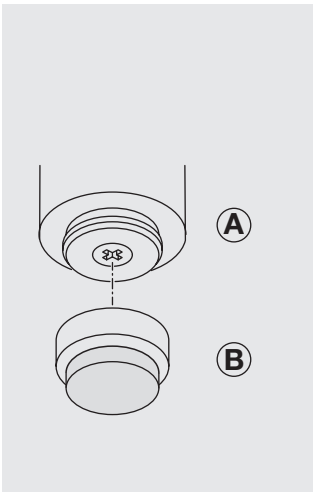

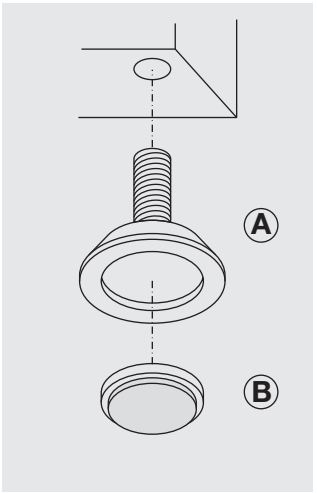

Dimensional data not binding. Dimensions in mm, inches are approximate. We reserve the right to alter specifications without notice.

QuickClick Glide System

→ Furniture Glides

Ultra-Soft felt glide

Ultra-soft insert, extremely low-noise, maximum protection for exquisite floors such as parquet, laminate and tile.

HYPER plastic glide

The special insert for extremely easy movement on flexible and hard, smooth or textile coverings such as linoleum, cork and carpet.

SYNO bonded leather glide

Extremely wear-free, durable and noise-reducing insert for heavily used floors such as linoleum, tile and paving stone.

STOP glide

The safety insert with the stopping effect for all smooth, slippery coverings such as marble, ceramic tile, natural stone and wood.

→ Floor Materials and Suitable Glides

Laminate

> Ultra-Soft

Parquet/vinyl

> Ultra-Soft

Tile

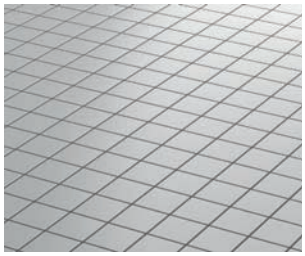

> Ultra-Soft
> SYNO

Linoleum

> Ultra-Soft
> HYPER
> STOP

Cork

> HYPER
> STOP

Carpet

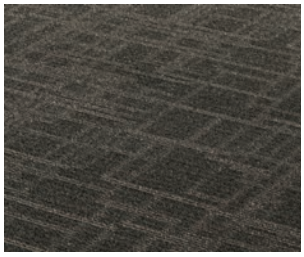

> HYPER

Paving stone

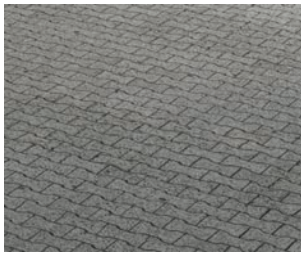

> SYNO

Marble

> Ultra-Soft
> STOP

Dimensional data not binding. Dimensions in mm, inches are approximate. We reserve the right to alter specifications without notice.

QuickClick Bases

> For round glide inserts
> Plastic; Color: black

→ Screw Mount

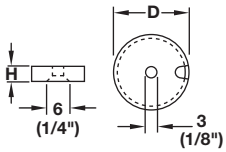

Diameter	Height	Item No.
20 (13/16")	7 (9/32")	650.22.312
25 (1")	7 (9/32")	650.22.313
30 (1 3/16")	5 (3/16")	650.22.314
50 (1 15/16")	5 (3/16")	650.22.316

→ Adhesive Tape Mount

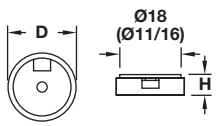

Diameter	Height	Item No.
20 (13/16")	7 (9/32")	650.24.300
25 (1")	7 (9/32")	650.24.301
30 (1 3/16")	5 (3/16")	650.24.302

QuickClick Glides

> Choose appropriate diameter to match base diameter
> Choose material based on floor application
> Glides snap in to bases

→ Ultra-Soft Felt Glide

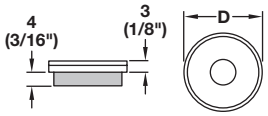

> For wood, laminate, marble, etc.
> Material: Plastic/Wool Felt; Color: natural; Felt: gray

Diameter	Total Height	Item No.
20 (13/16")	11 (7/16")	650.24.040
25 (1")	10 (3/8")	650.24.041
30 (1 3/16")	10 (3/8")	650.24.042
50 (1 15/16")	5 (3/16")	650.24.044

→ HYPER Plastic Glide

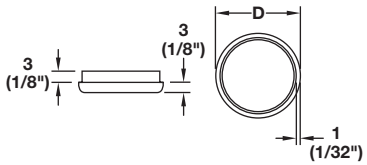

> Excellent sliding properties for carpet, cork, etc.
> Material: Plastic; Color: gray

Diameter	Total Height	Item No.
20 (13/16")	10 (3/8")	650.24.364
25 (1")	10 (3/8")	650.24.365
30 (1 3/16")	8 (5/16")	650.24.366
50 (1 15/16")	5 (3/16")	650.24.368

→ SYNO Bonded Leather Glide

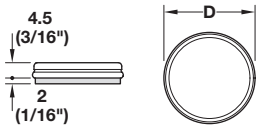

> Extremely durable for tile, stone, etc.
> Material: Plastic/Leather; Color: gray; Leather: brown

Diameter	Total Height	Item No.
20 (13/16")	7 (9/32")	650.24.464
25 (1")	7 (9/32")	650.24.465
30 (1 3/16")	7 (9/32")	650.24.466
50 (1 15/16")	5 (3/16")	650.24.467

→ STOP Glide

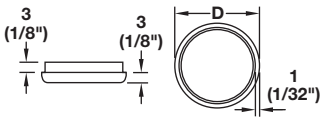

> Soft plastic helps to prevent slipping on hard surfaces
> Material: Plastic; Color: white

Diameter	Total Height	Item No.
20 (13/16")	6 (1/4")	650.22.071
25 (1")	6 (1/4")	650.22.072
30 (1 3/16")	6 (1/4")	650.22.073
50 (1 15/16")	5 (3/16")	650.22.074

3.0 x 13 Flat head screw page 6.67

Dimensional data not binding. Dimensions in mm, inches are approximate. We reserve the right to alter specifications without notice.

QuickClick Slim with Silencer Feature

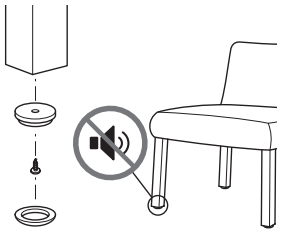

> Almost invisible due to minimal installation height
> The integrated absorber in the base element effectively dampens unpleasant noise and vibrations while sliding furniture
> Glides snap onto bases
> Silencer or threaded stem bases accept all 20 mm (13/16") diameter glides below

Glides

→ Base Element with Silencer

Screw mount

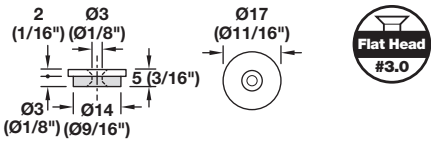

Press-fit

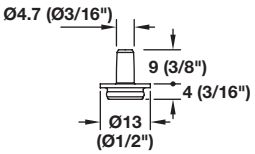

> Material: Plastic; Color: black

Version	Item No.
Screw mount	650.22.400
Press-fit	650.24.476

→ Ultra-Soft Felt Glide

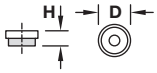

> For wood, laminate, marble, etc.
> Material: Plastic/Wool Felt; Color: natural; Felt: gray

Diameter	Total Height	Item No.
17 (11/16")	11 (7/16")	650.24.330
20 (13/16")	10 (3/8")	650.24.060
25 (1")	10 (3/8")	650.24.061

→ STOP Glide

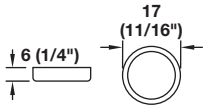

> Soft plastic helps to prevent slipping on hard surfaces
> Material: Plastic

Color	Item No.
white	650.22.070

→ Threaded Stem Levelers

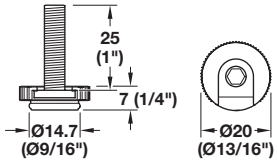

> Adjusts via 4 mm hex key
> Material: Plastic; Color: black

Threads	Item No.
M8 x 25 (1")	650.24.490
M10 x 25 (1")	650.24.491

→ HYPER Plastic Glide

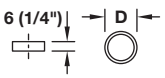

> Excellent sliding properties for carpet, cork, etc.
> Material: Plastic; Color: gray

Diameter	Total Height	Item No.
17 (11/16")	6 (1/4")	650.24.360
20 (13/16")	6 (1/4")	650.24.062
25 (1")	6 (1/4")	650.24.063

→ SYNO Bonded Leather Glide

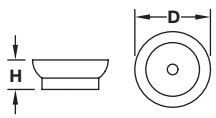

> Extremely durable for tile, stone, etc.
> Material: Bio-Plastic/Leather; Color: brown

Diameter	Total Height	Item No.
17 (11/16")	10 (3/8")	650.24.473
20 (13/16")	10 (3/8")	650.24.474
25 (1")	9 (11/32")	650.24.475

3.0 x 13 Flat head screw page 6.67

Dimensional data not binding. Dimensions in mm, inches are approximate. We reserve the right to alter specifications without notice.

QuickClick Rectangular

> For screw mounting under side panels of cabinetry

→ Base Element

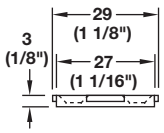

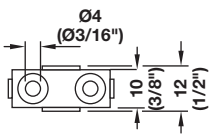

> L x W x H: 29 x 12 x 5 mm (1 1/8" x 1/2" x 3/16")
> Material: Plastic

Color	Item No.
black	650.22.347

→ Ultra-Soft Felt Glide

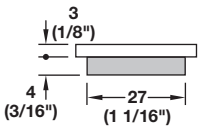

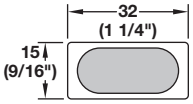

> For wood, laminate, marble, etc.
> L x W: 32 x 15 mm (1 1/4" x 9/16")
> Total height: 10 mm (3/8")
> Material: Plastic/Felt

Color	Item No.
natural/black	650.24.353

→ HYPER Plastic Glide

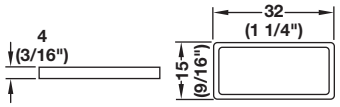

> Excellent sliding properties for carpet, cork, etc.
> L x W: 32 x 15 mm (1 1/4" x 9/16")
> Total height: 7 mm (9/32")
> Material: Plastic

Color	Item No.
gray	650.24.372

→ Flat Head Screw

> 3.0 x 13

	Item No.
	015.31.522

Dimensional data not binding. Dimensions in mm, inches are approximate. We reserve the right to alter specifications without notice.

Glides

→ Glide

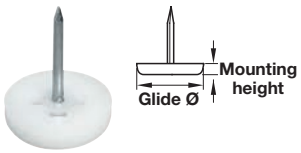

> Length of nail: approximately 19 mm (3/4")
> Material: Plastic

Glide Ø	Mounting height	white	brown
10 (3/8")	4 (5/32")	650.02.100	-
13 (1/2")	4.5 (3/16")	650.02.137	650.02.147
16 (5/8")	6 (1/4")	650.02.164	650.02.174
19 (3/4")	6 (1/4")	650.02.191	650.02.199
22 (7/8")	6 (1/4")	650.02.226	650.02.236
25 (1")	6 (1/4")	650.02.250	650.02.260

→ Glide

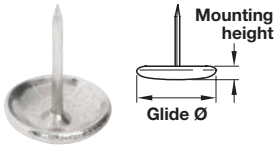

> Length of nail: approximately 19 mm (3/4")
> Material: Steel; Finish: nickel-plated

Glide Ø	Mounting height	Item No.
13 (1/2")	3.5 (5/32")	650.01.130
15 (9/16")	3.5 (5/32")	650.01.158
18 (11/16")	3.5 (5/32")	650.01.185
20 (13/16")	3.5 (5/32")	650.01.201
23 (15/16")	4.5 (3/16")	650.01.238
25 (1")	4.5 (3/16")	650.01.256
30 (1 3/16")	4.5 (3/16")	650.01.309

→ Glide

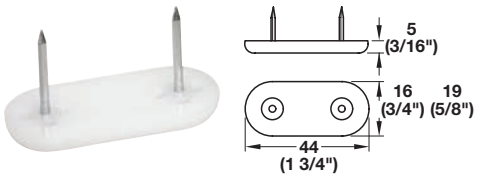

> Length of nails: approximately 19 mm (3/4")
> Width: 44 mm (1 3/4")
> Material: Plastic; Color: white

Height	Item No.
16 (5/8")	650.05.716
19 (3/4")	650.05.719

→ Glide

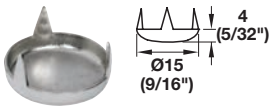

> With 3 knock-in teeth
> Material: Steel

Finish	Item No.
nickel-plated	650.03.152

→ Corner Protector

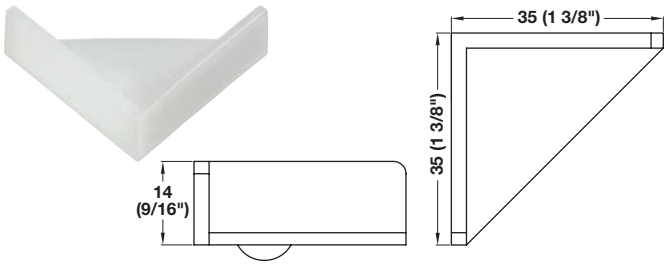

> With floor-guide bump
> Material: Plastic (Polyethylene)

Color	Item No.
white	650.09.703

Dimensional data not binding. Dimensions in mm, inches are approximate. We reserve the right to alter specifications without notice.

Glides

→ Glide

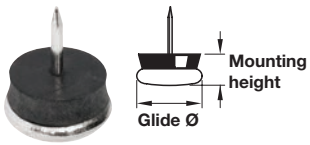

> Length of nail: approximately 19 mm (3/4")
> With intermediate rubber layer
> Material: Steel; Finish: nickel-plated

Glide Ø	Mounting height	Item No.
18 (11/16")	8 (5/16")	650.11.181
20 (13/16")	8 (5/16")	650.11.207
23 (7/8")	8.5 (3/8")	650.11.225
25 (1")	8.5 (3/8")	650.11.252
30 (1 3/16")	8.5 (3/8")	650.11.305

→ Glide

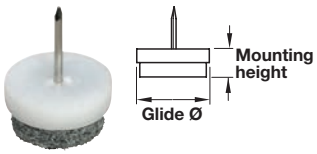

> Length of nail: approximately 16 mm (5/8")
> Low abrasion
> Mounting height: 10 mm (3/8")
> Material: Plastic/Felt; Color: gray/natural

Glide Ø	Item No.
20 (13/16")	650.20.206
24 (1")	650.20.242
30 (1 3/16")	650.20.304

→ Glide

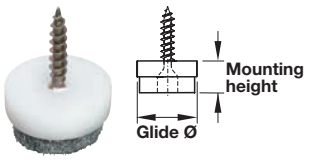

> Length of screw: approximately 16 mm (5/8")
> Material: Plastic/Felt; Color: gray/natural

Glide Ø	Mounting height	Item No.
20 (13/16")	9 (11/32")	650.20.720
24 (1")	9 (11/32")	650.20.724
28 (1 1/8")	9 (11/32")	650.20.728
40 (1 5/8")	10 (3/8")	650.20.740

Supplied With
3.5 x 20 mm steel, galvanized flat head screws

→ Glide

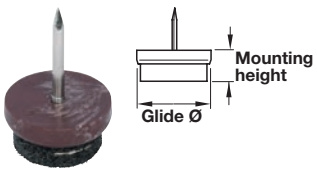

> Length of nail: approximately 16 mm (5/8")
> Especially suitable for furniture made of hard wood
> Mounting height: 9 mm (11/32")
> Material: Plastic/Felt; Color: brown/gray

Glide Ø	Item No.
21 (7/8")	650.21.121
24 (1")	650.21.124
27 (1 1/16")	650.21.127

→ Glide

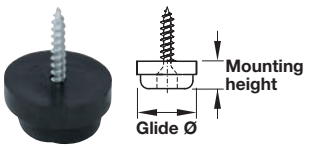

> Length of screw: approximately 16 mm (5/8")
> Non-skid
> Use for furniture on smooth or slippery floors
> Mounting height: 10 mm (3/8")
> Material: Plastic; Color: black/natural

Glide Ø	Item No.
24 (1")	650.19.324
28 (1/8")	650.19.328

Supplied With
3.5 x 20 mm steel, galvanized flat head screws

Dimensional data not binding. Dimensions in mm, inches are approximate. We reserve the right to alter specifications without notice.

Glides

> Economically priced glides meet all the requirements of a high quality furniture glide
> Minimal contact pressure due to flat base and easy movement with radiused edges
> Available in different heights, these glides are especially suitable for upholstered furniture
> Static weight capacity: approximately 50 kg (110 lbs.) per glide

→ Glide

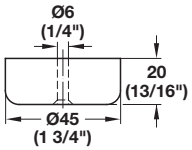

Flat Head #9

> Material: Plastic

Color	Item No.
black	635.80.315

→ Glide

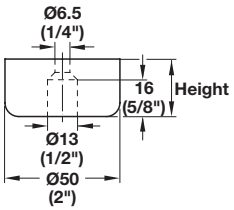

Flat Head #12

> Material: Plastic; Color: black

Height	Item No.
25 (1")	635.80.325
40 (1 9/16")	635.80.343

→ Glide

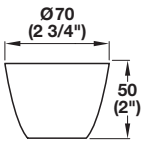

Pan Head #10

> Screw mounted
> Material: Plastic, lacquered

Color	Item No.
black	634.00.300

→ Furniture Foot

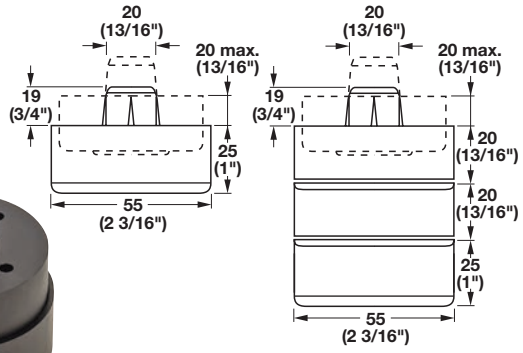

> Two-section furniture foot is simply knocked into place and can be height adjusted by 20 mm (25/32") (total height 45 mm (1 3/4")
> Easily adjusted using an 8 mm (5/16") hex key through the base of the furniture, an advantage for large units
> Press-fits into 20 mm (25/32") hole
> Material: Plastic

Color	Item No.
black	635.92.320

→ Furniture Glide

Pan Head #8

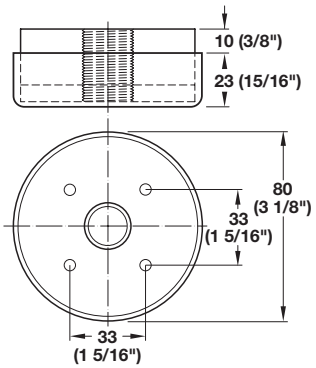

> Vertically adjustable: 23–33 mm (15/16"–1 5/16")
> Extra large contact area prevents furniture from sinking into the floor covering; provides effortless movement
> Hard abrasion proof surface, suitable for carpets
> Material: Plastic

Color	Item No.
black	635.83.308

Flat head screws	pages 12.7-12.8, 12.10, 12.13
Pan head screws	pages 12.9-12.10

Dimensional data not binding. Dimensions in mm, inches are approximate. We reserve the right to alter specifications without notice.

Levelers

→ Base Leveler

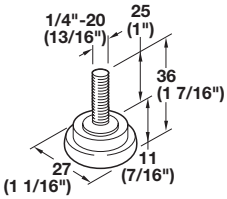

> 1/4"-20 mm x 25 mm threaded stem
> Material: Steel

Finish	Item No.
nickel-plated	651.13.906

→ T-Nut

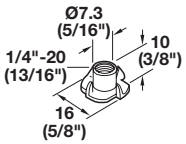

> 1/4"-20 mm x 10 mm
> Material: Steel

Finish	Item No.
zinc-plated	031.05.968

→ Knock-in Stem

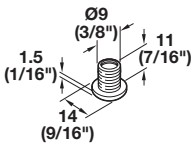

> 1/4"-20 mm x 11 mm
> Material: Brass

	Item No.
	039.02.065

→ Base Leveler

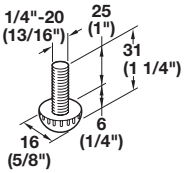

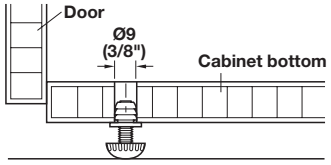

> 1/4"-20 mm x 1" threaded stem
> Material: Steel; Finish: zinc-plated; Base: Plastic

Base Color	Item No.
brown	637.05.108
black	637.05.308
white	637.05.708

→ Base Leveler

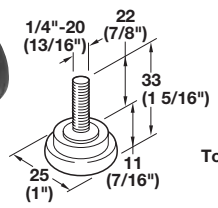

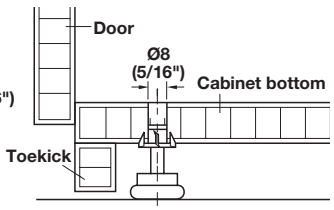

> 1/4"-20 mm x 22 mm threaded stem
> Material: Steel; Finish: zinc-plated; Cap: Plastic

Cap Color	Item No.
black	651.04.332

→ Furniture Wedge

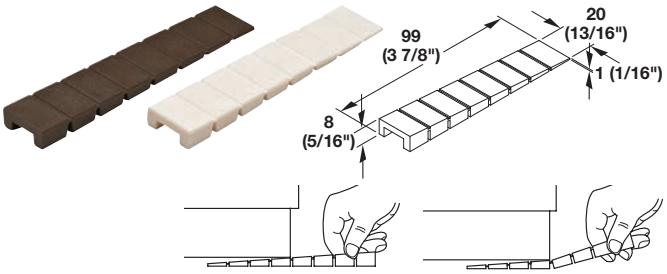

> Perfectly levels the furniture for proper door function
> Place the strip under furniture to level, then snap off the sections
> Sections can be broken off from 1–8 mm (1/16"–5/16")
> Material: Plastic

Color	Item No.
brown	006.90.900
white	006.90.920

Pan head screws pages 12.9-12.10

Dimensional data not binding. Dimensions in mm, inches are approximate. We reserve the right to alter specifications without notice.

Levelers

→ M10 Base Leveler

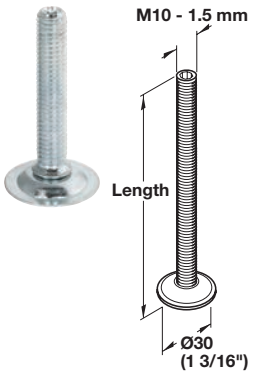

> With swiveling base plate and 5 mm (3/16") hexagon socket
> Material: Steel; Finish: zinc-plated

Length	Item No.
60 (2 3/8")	637.03.009
70 (2 3/4")	637.03.018
80 (3 3/16")	637.03.027
90 (3 9/16")	637.03.036
100 (4")	637.03.045
120 (4 3/4")	637.03.054

→ Protective Cap, optional

> Snaps over swiveling base plate above, order separately
> Material: Plastic

Color	Item No.
white	637.02.090

→ M10 Base Leveler

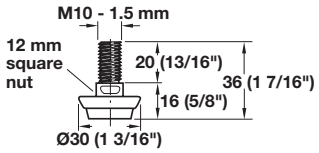

> Material: Steel; Base: Rubber; Color: black

Finish	Item No.
zinc-plated	651.02.919

→ Leveler with Stainless Steel Footplate

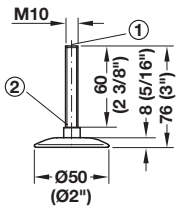

① Hexagon socket SW5
② Square nut SW8

> Weight capacity: approximately 250 kg (551 lbs.)/screw
> Top: hexagon socket SW5; Bottom: square nut SW8
> Material: Screw: Steel, galvanized; Glide: Plastic; Color: black; Footplate: Stainless Steel, ground

	Item No.
	637.00.020

→ M10 Base Leveler

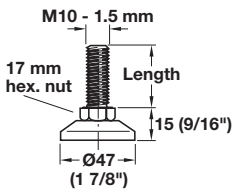

> With fixed foot
> Material: Thread: Steel; Finish: zinc-plated; Foot: Plastic; Color: black

Length	Item No.
30 (1 1/8")	651.01.304
50 (2")	651.01.500

→ M10 Base Leveler

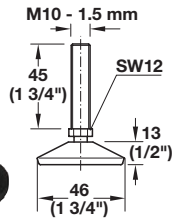

> Swivels with ball joint
> Material: Thread: Steel Foot: Plastic; Color: black

Finish	Item No.
zinc-plated	651.00.125

→ M10 Base Leveler

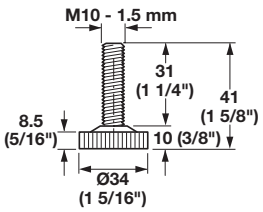

> Material: Thread: Steel; Foot: Nylon; Color: black

Finish	Item No.
zinc-plated	651.01.330

→ M8 Base Leveler

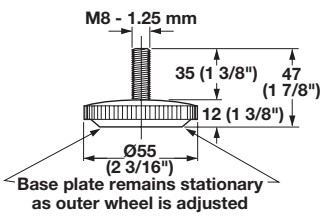

> Material: Thread: Steel; Foot: Nylon; Color: black

Finish	Item No.
zinc-plated	651.06.300

Dimensional data not binding. Dimensions in mm, inches are approximate. We reserve the right to alter specifications without notice.

Levelers

> Adjustable from above through a hole in cabinet bottom and from below with an open-ended wrench

→ Base Leveler Screw

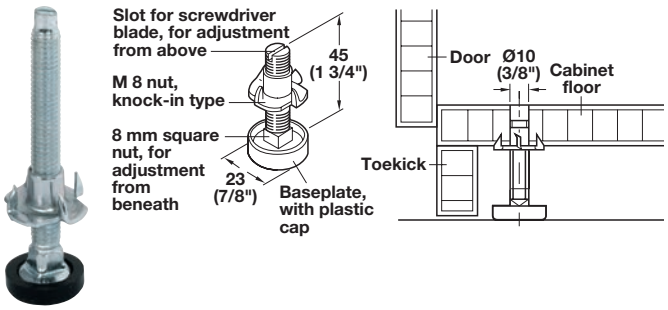

> M8 X 45 mm (1 3/4"), with T-nut
> Material: Steel; Finish: zinc-plated; Cap: Plastic

Cap Color	Item No.
white	637.05.000
black	637.05.300

→ Heavy-duty Base Leveler

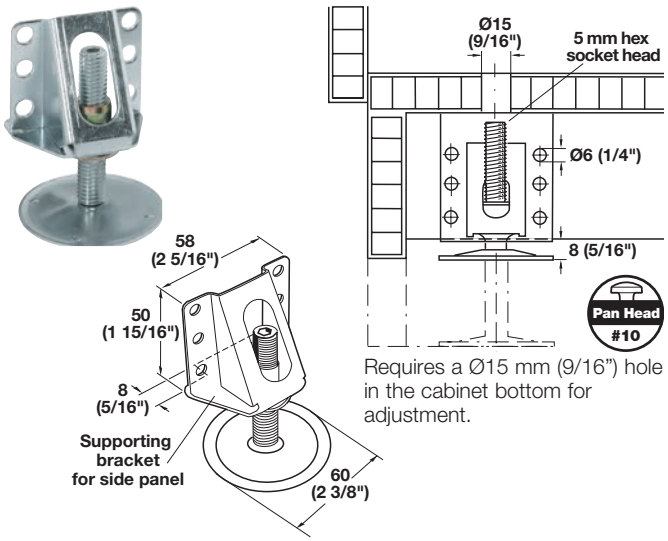

Requires a Ø15 mm (9/16") hole in the cabinet bottom for adjustment.

> With supporting bracket
> Screw mounted
> Minimum installation height: 70 mm (2 3/4")
> Adjustment range: +45 mm (1 3/4")
> Weight capacity: 200 kg (440 lbs)
> Material: Steel

Finish	Item No.
zinc-plated	637.67.900

Supplied With
M12 X 65 (2 9/16") bolt with M5 mm hexagonal socket head
Base plate

Pan head screws pages 12.9-12.10

→ Base Leveler

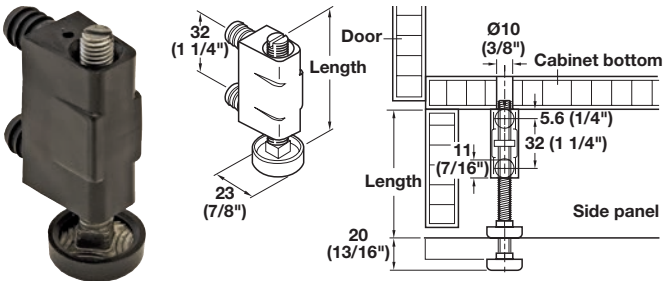

Adjusts from above through a hole in cabinet bottom and from below with an open-ended wrench.

> With press-fit plugs
> Minimum installation height: 50 mm (2")
> Adjustment range: +20 mm (3/4")
> Weight capacity: 50 kg (110 lbs.)
> Material: Leveler and cap: Plastic; Color: black
> Bolt: Steel; Finish: zinc-plated

Length	Item No.
60 (2 3/8")	637.11.320
80 (3 3/16")	637.11.348

Supplied With
M8 bolt with slotted head
Base plate with cap

→ Base Leveler

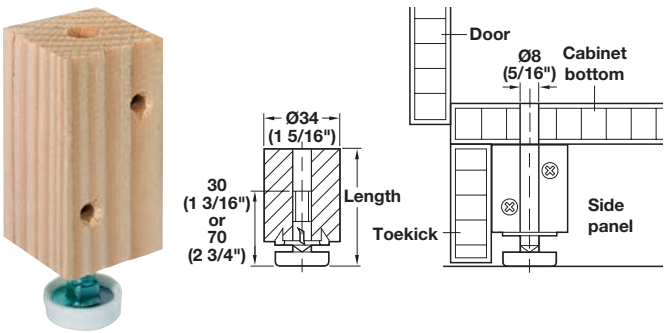

> Material: Steel; Finish: zinc-plated; Mounting block: Wood
> Cap: Plastic; Color: white

Length	With M8 x 30 mm (1 3/16") screw	With M8 x 70 mm (2 3/4") screw
55 (2 3/16")	637.12.229	-
80 (3 1/8")	-	637.12.265

Dimensional data not binding. Dimensions in mm, inches are approximate. We reserve the right to alter specifications without notice.

Levelers

→ Base Leveler

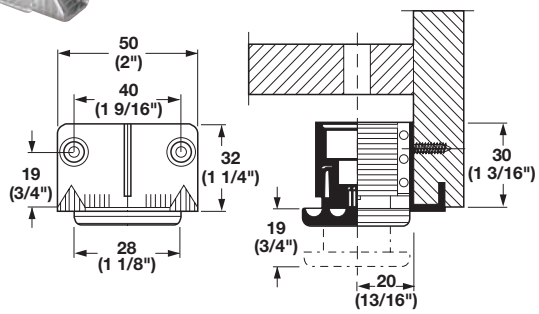

> With pound-in prongs
> Screw mounted
> Adjusts with flat bladed screwdriver
> Weight capacity: 100 kg (220 lbs.)
> Material: Steel, galvanized
Internal element & foot: Plastic; Color: black

	Item No.
	637.42.905

→ Heavy-duty Base Leveler

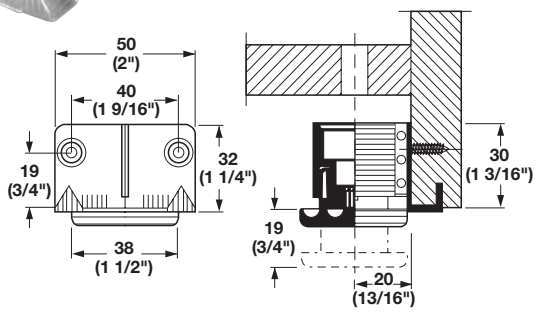

> With pound-in prongs
> Screw mounted
> Adjusts with 6 mm (1/4") hex key, order separately
> Weight capacity: 150 kg (330 lbs.)
> Material: Steel, galvanized; Internal element: Zinc
Foot: Plastic; Color: black

	Item No.
	637.42.950

→ Base Leveler

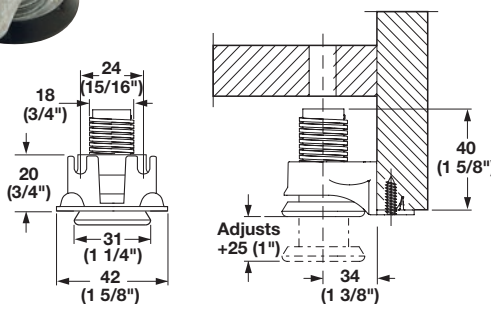

> With pound-in prongs
> Screw mounted
> Adjusts with 6 mm (1/4") hex key, flat-bladed screw driver, or Phillips screwdriver
> Integrated glide functions independently of the foot to make adjustment easier and to prevent damage to floor surfaces
> Weight capacity: 175 kg (385 lbs.)
> Material: Zinc, unfinished; Foot: Plastic; Color: black

	Item No.
	637.67.910

Dimensional data not binding. Dimensions in mm, inches are approximate. We reserve the right to alter specifications without notice.

Levelers

→ Base Leveler

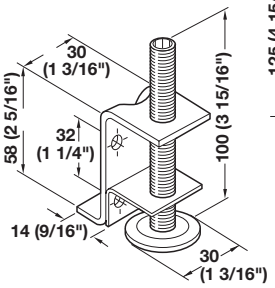

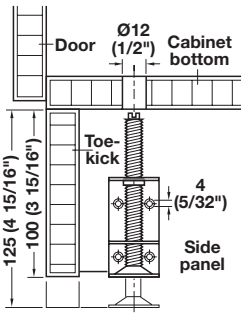

> With supporting bracket
> Screw mounted
> Minimum installation height: 100 mm (4")
> Adjusts with M5 hex key
> Adjustment range: + 32 mm (1 1/4")
> Weight capacity: 150 kg (330 lbs.)
> Material: Steel

Finish	Item No.
zinc-plated	637.31.941

Supplied With
M10 X 100 (4") bolt
Swiveling base plate

→ Base Leveler

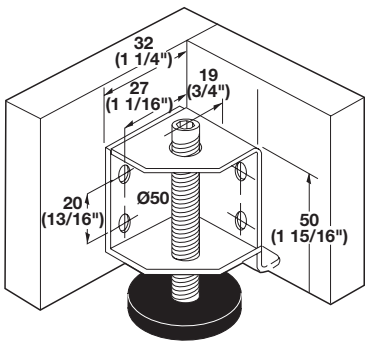

> With corner support
> Foot plate swivels for uneven surfaces
> Provides 20 mm (3/4") of adjustment
> Weight capacity: 150 kg (330 lbs.)
> Material: Steel; Cap: Plastic

Finish	Item No.
zinc-plated	637.37.904

Supplied With
M8 x 70 (2 3/4") bolt with M4 hexagonal socket head
Base plate Ø34 mm (1 5/16") with cap
2 Left levelers
2 Right levelers

→ Protective Cap, optional

> Snaps over swiveling base plate, to the left, order separately
> Material: Plastic

Color	Item No.
white	637.02.090

→ Base Leveler

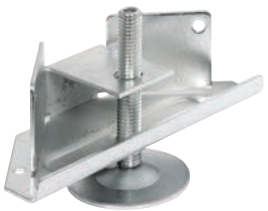

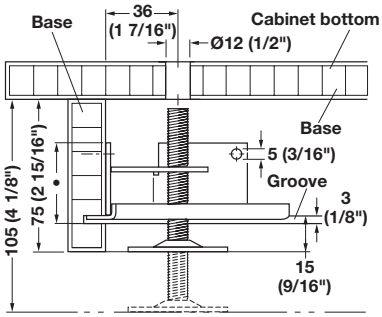

> With supporting bracket
> Groove or screw mounted
> Minimum installation height: 75 mm (3")
> Adjustment range: + 30 mm (1 1/8")
> Weight capacity: 150 kg (330 lbs.)
> Material: Steel

Finish	Item No.
zinc-plated	637.23.900

Supplied With
Threaded bolt M10 x 65 mm (2 9/16")
Hexagon socket M5
Swiveling base plate Ø50 mm (2")

→ Base Leveler

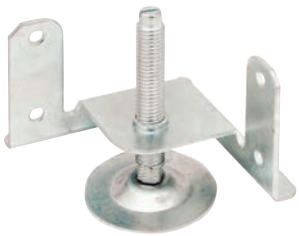

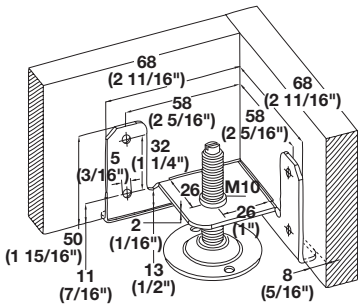

> With supporting bracket
> Groove or screw mounted
> Provides +50 mm (2") of adjustment
> Weight capacity: 150 kg (330 lbs.)
> Material: Steel

Finish	Item No.
zinc-plated	637.63.900

Supplied With
M10 x 70 (2 3/4") bolt with slotted head
Base plate Ø45 mm (1 3/4")

Dimensional data not binding. Dimensions in mm, inches are approximate. We reserve the right to alter specifications without notice.

Levelers

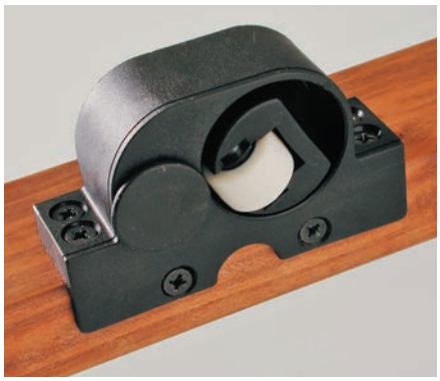
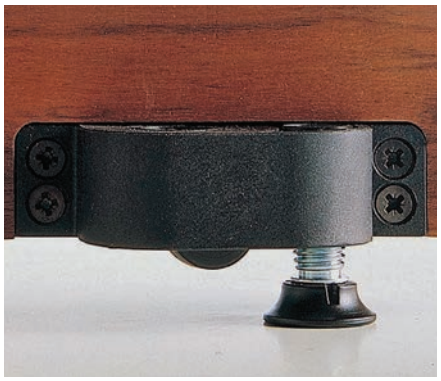

→ Leveler/Caster Combo

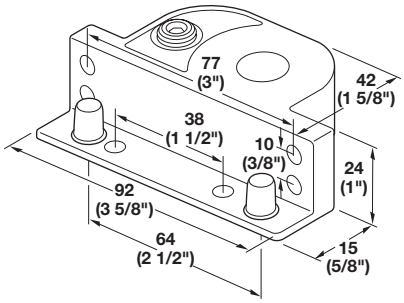

> Innovative design for furniture applications
> Allows both mobility and leveling in a single unit
> Unit is handed and used in pairs
> Caster pivots 360°
> Screw mounted
> Adjusts with M4 hex key, order separately
> Adjustment range: +15 mm (5/8")
> Weight capacity: 120 kg (264 lbs.) for caster
200 kg (440 lbs.) for leveler
> Material: Housing: Nylon with glass fibers; Leveler: Steel

Finish	Item No.
black	651.00.300

Supplied With
1 Right unit
1 Left unit

→ Insert Leveler

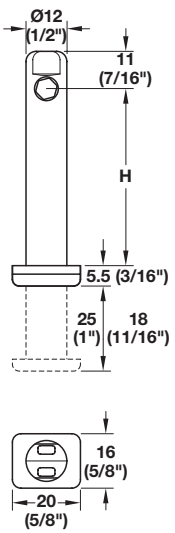

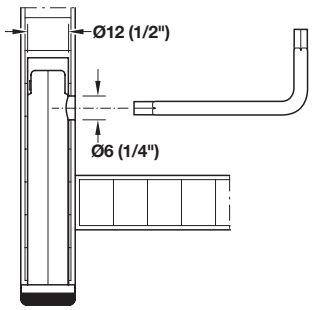

> Hexagon socket drive SW4 at side
> Height adjustment: +25 mm (1") + 18 mm (11/16")
with height 32 mm (1 1/4")
> Weight capacity: approximately 300 kg (661 lbs.)
> Material: Zinc Alloy, unfinished

Height	Drilling depth	Item No.
32 (1 1/4")	43 (1 11/16")	637.24.021
52 (2 1/16")	63 (2 3/161")	637.24.022
70 (2 3/4")	81 (3 3/16")	637.24.023
100 (4")	111 (4 3/8")	637.24.024
120 (4 3/4")	131 (5 5/32")	637.24.025

Note
Drilling Depth = Height + 11 mm (7/16")

Dimensional data not binding. Dimensions in mm, inches are approximate. We reserve the right to alter specifications without notice.

Levelers

> Slightly oversized to allow for material thickness tolerances
> Holes on one side for fastening

→ U-Bracket

> Material: Steel, epoxy-coated; Finish: black

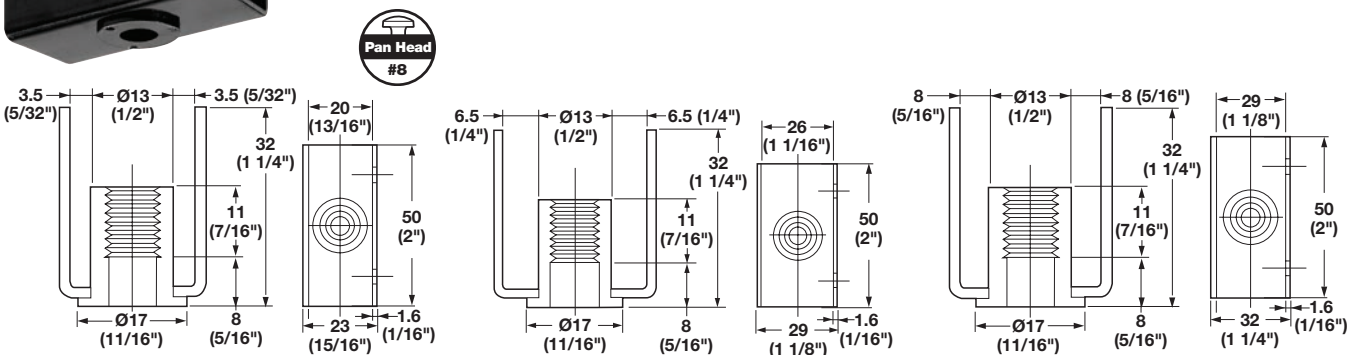

Thread Size	19 mm (3/4") thick material	25 mm (1") thick material	28 mm (1 1/8") thick material
1/4"-20	637.95.311	637.95.321	-
5/16"-18	637.95.312	-	-
M10-1.5 mm	637.95.314	637.95.324	637.95.334

→ U-Bracket with M10 Threads

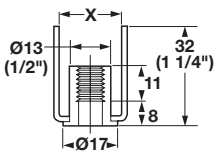

> Material: Steel, epoxy-coated; Finish: black

Thickness	X	Item No.
19 (3/4")	20 (13/16")	637.95.314
26 (1")	26 (1")	637.95.324
29 (1 1/8")	29 (1 1/8")	637.95.334

→ Threaded Plate

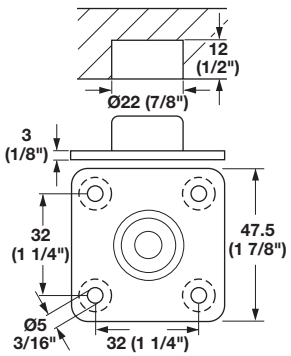

> Screw mounted
> With M10-1.5 mm (1/16") internal thread
> Heavy-duty; for levelers or casters
> Material: Zinc, plated; Internal thread element: Steel

Finish	Item No.
nickel-plated	637.07.910

Supplied With
50 pcs.

Pan head screws pages 12.9-12.10

Dimensional data not binding. Dimensions in mm, inches are approximate. We reserve the right to alter specifications without notice.

Leveler Accessories

→ M10 Bracket

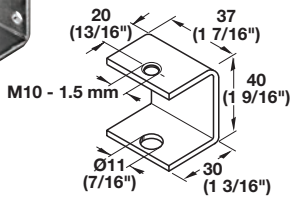

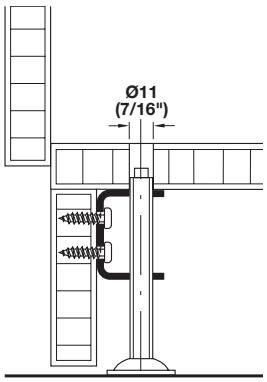

> Screw mounted
> Material: Steel

Finish	Item No.
zinc-plated	637.07.004

→ M10 Plate

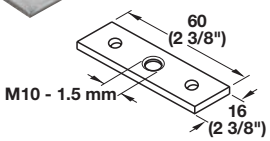

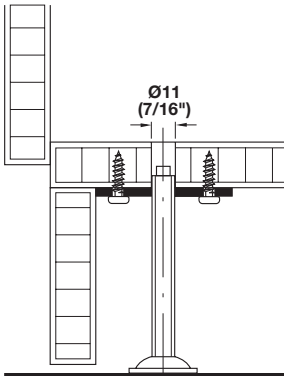

> Screw mounted
> Material: Steel

Finish	Item No.
zinc-plated	637.09.008

→ M10 T-Nut

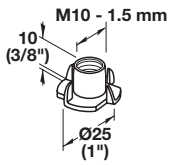

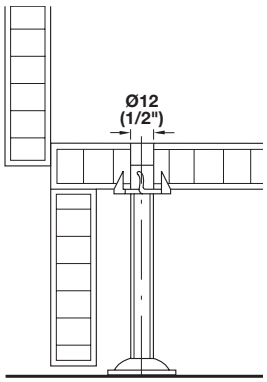

> Material: Steel, unfinished

Finish	Item No.
zinc-plated	031.00.301

Dimensional data not binding. Dimensions in mm, inches are approximate. We reserve the right to alter specifications without notice.

Mounting Plates

→ Square, M8

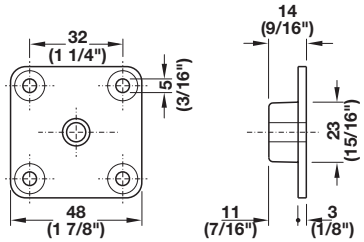

> Material: Zinc, galvanized

Item No.
634.15.080

Note
Mounting screws are not included.

→ Round, M8

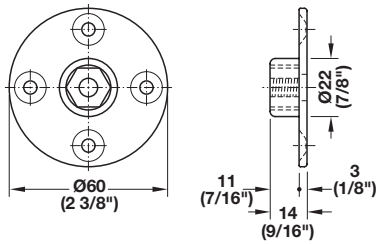

> Material: Zinc, galvanized

Item No.
634.15.070

Note
Mounting screws are not included.

→ Round, M8

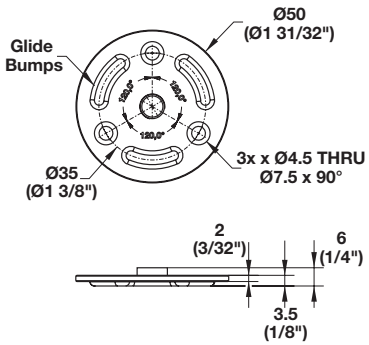

> Can be used as a glide until feet are mounted
> Material: Steel, galvanized

Item No.
635.79.310

Note
Mounting screws are not included.

→ Triangle, M8

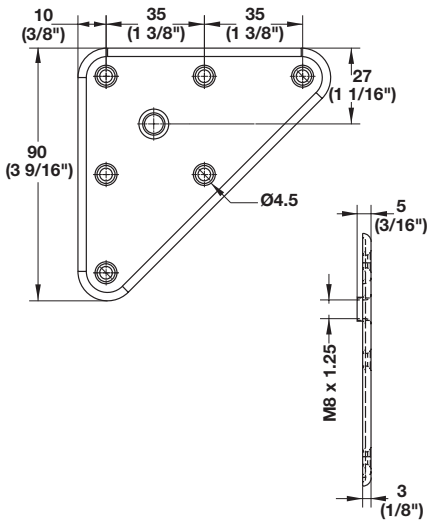

> Material: Steel, galvanized

Item No.
634.08.495

Note
Mounting screws are not included.

Dimensional data not binding. Dimensions in mm, inches are approximate. We reserve the right to alter specifications without notice.

Table Top Swivel Fitting

> Solution for small rooms such as home office, waiting rooms, meeting rooms, children's rooms or dining rooms
> One piece of furniture - two functions: Sideboard and Table
> The entire storage space inside the cabinet can be used
> For cabinets with inset doors and drawers
> Width: ≤1200 mm (47 1/4")
> Depth T: ≤600 mm (23 5/8")
> Panel thickness: Top panel: ≥25 mm (1")
Side panel: ≥28 mm (1 1/8")
> Door thickness: ≤25 mm (1")

→ Swivel Fitting

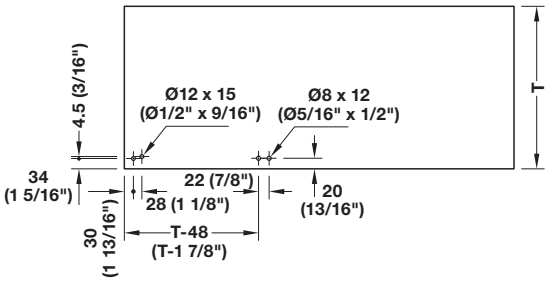

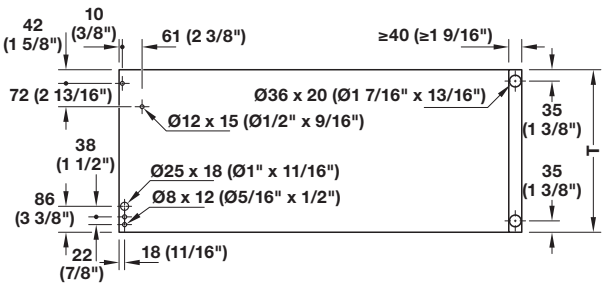

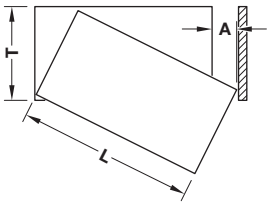

		L = Length						
		600 (23.62")	700 (27.56")	800 (31.50")	900 (35.43")	1000 (39.37")	1100 (43.31")	1200 (47.24")
		Dimension A						
T = Depth	300 (11.81")	76 (2.99")	67 (2.62")	59 (2.34")	54 (2.11")	49 (1.93")	45 (1.78")	42 (1.65")
	350 (13.78")	100 (3.92")	88 (3.45")	78 (3.08")	71 (2.78")	64 (2.54")	59 (2.34")	55 (2.17")
	400 (15.75")	126 (4.96")	111 (4.38")	99 (3.91")	90 (3.54")	82 (3.23")	75 (2.97")	70 (2.75")
	450 (17.72")	155 (6.10")	137 (5.40")	123 (4.84")	111 (4.38")	102 (4.00")	93 (3.68")	87 (3.41")
	500 (19.69")	186 (7.32")	165 (6.51")	148 (5.84")	135 (5.30")	123 (4.84")	113 (4.46")	105 (4.13")
	550 (21.65")	219 (8.62")	195 (7.69")	176 (6.92")	160 (6.29")	146 (5.76")	135 (5.31")	125 (4.92")
	600 (23.62")	254 (9.98")	227 (8.94")	205 (8.07")	187 (7.35")	171 (6.74")	158 (6.22")	147 (5.77")

Dimensional data not binding. Dimensions in mm, inches are approximate. We reserve the right to alter specifications without notice.

Table Top Fitting

→ Table Top Swivel Set

Supplied with

1 short lever	①	2 felt adhesive point	⑥
2 fixing plug	②	4 felt adhesive point	⑥a
1 connecting plate	③	2 plates	⑦
2 sleeve	④	1 soft roller	⑧
2 support screw	⑤	1 spacer ring	⑨

Note
Please order 2 casters ⑩ for floor separately.

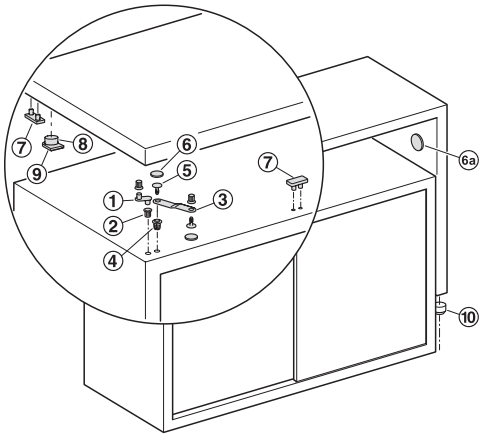

	Item No.
	646.31.004

→ Mini Roller Caster

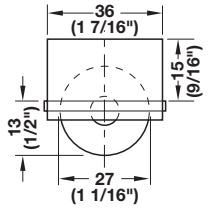

> Weight capacity: 40 kg (88 lbs.)
> Material: Plastic; Color: black

Version	Item No.
Hard	661.05.320
Soft	661.05.330

Pan head screws pages 12.9-12.10

Dimensional data not binding. Dimensions in mm, inches are approximate. We reserve the right to alter specifications without notice.

Tavoflex

soft&silent

- The table top is lifted easily using gas-filled struts
- Integrated soft closing mechanism
- With safety catch to prevent unintentional closing
- Weight capacity: 5 kg (11 lbs.)

→ Top Lift-Up Fitting

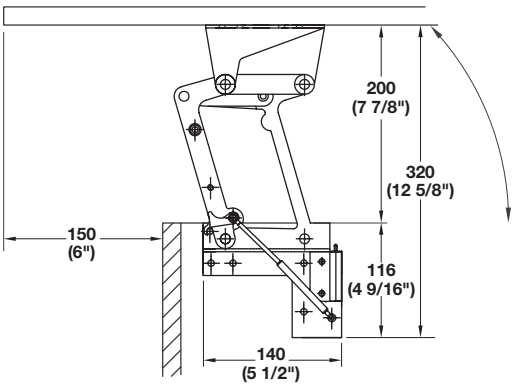

Drilling Pattern

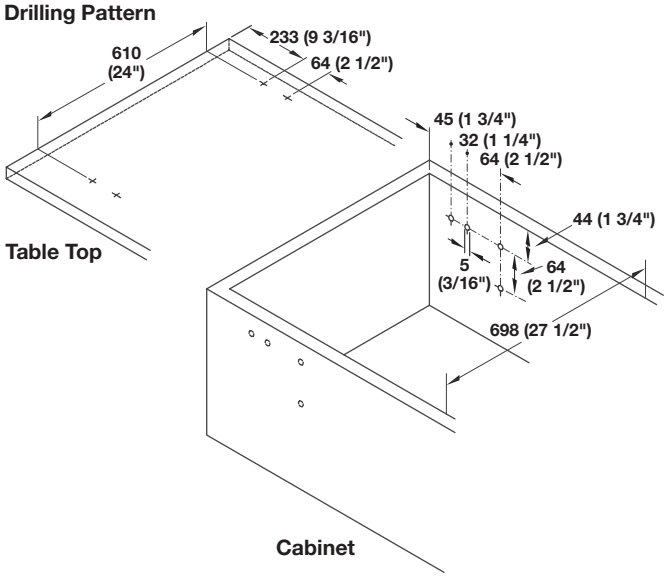

- For raising and forward pivoting of table tops and worktops
- Side covers prevent fingers from being trapped
- Cross bar cannot be shortened
- For screw mounting into pre-drilled 32 mm (1 1/4") series drilled holes
- Recommended panel thickness: 16 mm (5/8")
- Installation width: 698 mm (27 1/2")
- Material: Steel

Finish	Item No.
silver aluminum, RAL 9006	643.12.201

Supplied With
2 Lift up table top fittings
Cross bar
Installation instructions

Note
Minimum gap between a fixed table top 6 mm (1/4").

Dimensional data not binding. Dimensions in mm, inches are approximate. We reserve the right to alter specifications without notice.

Table Connectors

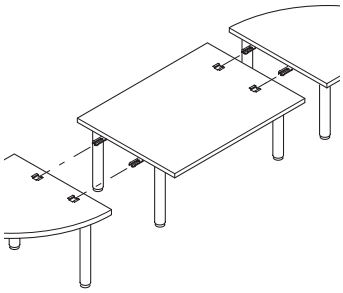

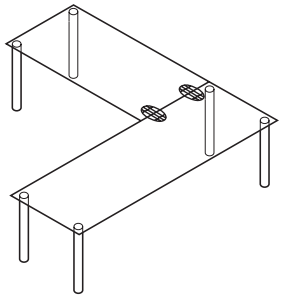

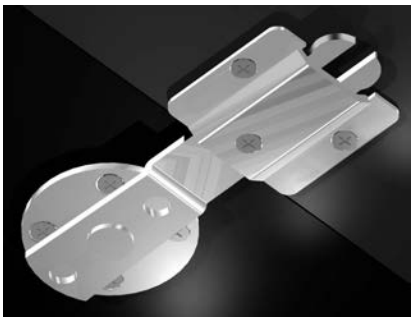

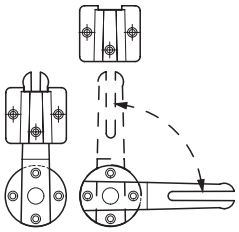

→ Linkit Connector

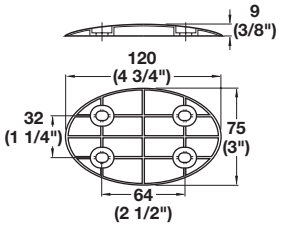

> For tables and table leaves
> Low profile, smooth finish
> Oblong holes allow for alignment of tops
> Holds tops together flush and stable
> Mounts to the underside of the table top
> Material: Zinc, powder-coated

Finish	Item No.
dark gray	642.43.300

→ Washer Head Screw

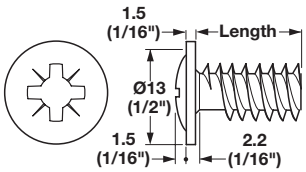

> For Linkit table connector
> Material: Steel; Finish: zinc-plated

Length	Item No.	Packing
14 (9/16")	013.10.149	1000 pcs.
29 (1 1/8")	013.10.283	500 pcs.

→ "Click Catch" Connector

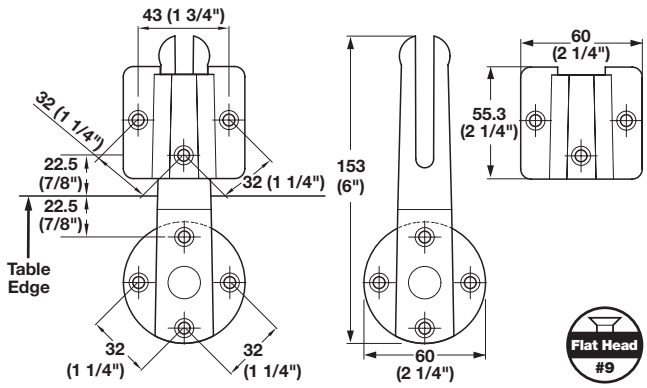

> For joining free-standing tables or table leaves
> Clicks together; no tool required for tightening
> Extremely thin design will not interfere with leg movement
> Male piece rotates 360° with stops every 90°
> Completely concealed under table top
> Material: Steel

Finish	Item No.
zinc-plated	642.42.900

Supplied With
Male piece
Female piece

Flat head screws pages 12.7-12.8, 12.10, 12.13

Dimensional data not binding. Dimensions in mm, inches are approximate. We reserve the right to alter specifications without notice.

Table Connectors and Accessories

→ Cam-it Connector

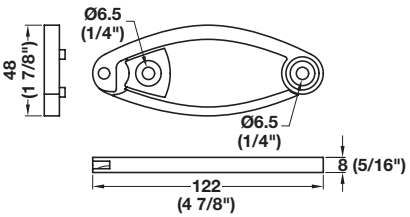

> Mounts directly to underside of table top or desk
> Modular cam design allows pivoting connector to join panels together quickly and easily
> Connector can be hidden under the top panel when tables are separated
> Material: Plastic

Finish	Item No.
black	642.43.310

Supplied With
Drilling template

→ Washer Head Screw

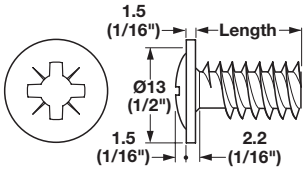

> For Cam-it table connector
> Material: Steel; Finish: zinc-plated

Length	Item No.	Packing
14 (9/16")	013.10.149	1000 pcs.
29 (1 1/8")	013.10.283	500 pcs.

→ Table Connector

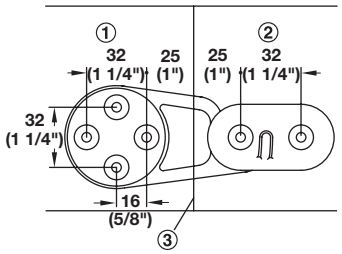

① Fixed plate
② Hook-in plate
③ Table top edges

> Screw mounts under tabletop
> Installation height: 9 mm (3/8")
> Material: Catch: Plastic; Hook-in plate: Zinc Alloy, bright

Color	Item No.
gray	642.42.920

Supplied With
2 Hook-in parts
2 Catches

→ Peg and Sleeve Connector

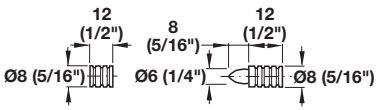

> Presses into Ø8 mm (5/16") holes
> Material: Steel

Finish	Item No.
yellow chromate	642.51.243

Dimensional data not binding. Dimensions in mm, inches are approximate. We reserve the right to alter specifications without notice.

Folding Fittings

→ Folding Fitting

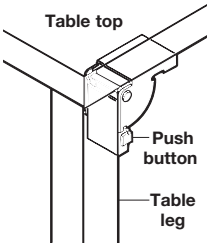

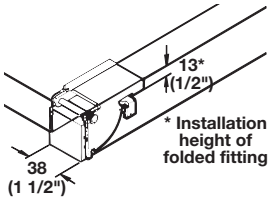

> For lightweight tables
> For 38 x 38 mm (1 1/2" x 1 1/2") legs
> Locks in position, open and closed
> Material: Steel, galvanized

	Item No.
	642.90.919

Supplied With
2 Fittings

→ Table Leaf Flap Hinge

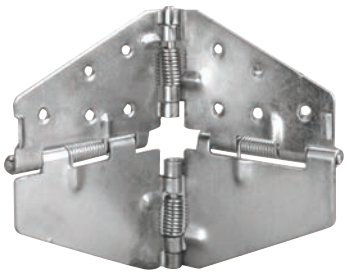

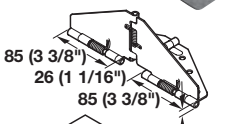

Flat Head #6

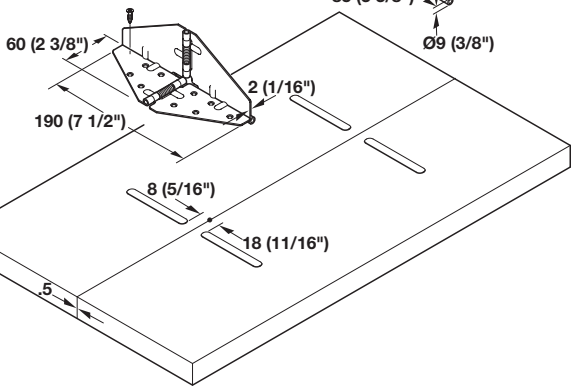

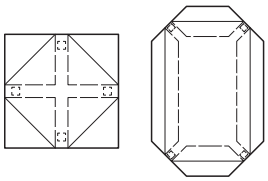

Note
Table leafs are held securely under table. Rotate leafs up (180º) and hinges automatically lock leafs into horizontal position. Flap hinge is designed for relatively light duty applications. Flap should not exceed 203 mm (8") in depth, please conduct your own test. **Häfele cannot specify a weight rating.**

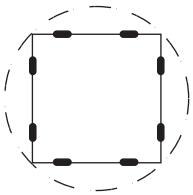

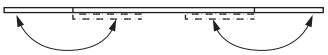

Converts square tops to round tops, or other shapes

> Material: Steel

Finish	Item No.
yellow chromate	642.70.515

Note
Hinge is under constant spring tension.
Keep fingers clear when operating.

Flat head screws pages 12.7-12.8, 12.10, 12.13

Dimensional data not binding. Dimensions in mm, inches are approximate. We reserve the right to alter specifications without notice.

Drop-Leaf Fitting

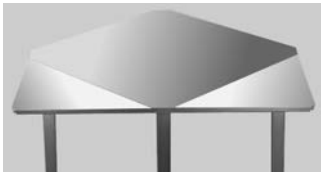

The table can be enlarged and modified.

> Not recommended for leaf depths over 250 mm (12")
> Additional sets should be installed at 500 mm (20") intervals
> Weight capacity: 15 kg (33 lbs.)
> Length: Shelf support: 360 mm (14 3/16")
Guide profile: 180 mm (7 1/8")
Flexible hinges: 500 mm (19 3/4")
> Material: Shelf support and guide profile: Aluminum;
Finish: silver anodized
Flexible hinges: Plastic; natural
Double ball catch: Brass; unfinished
Stop buffer: Rubber; Color: black

→ Table Fitting

	Item No.
	642.40.008

Supplied With
Sliding support
Guide profile
2 Flexible hinges
Double ball catch
Stop buffer

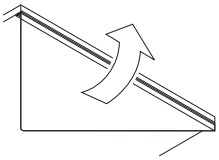

The leaf is retracted and held in place by the ball catch.

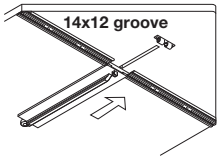

The leaf is extended. The sliding support must also be extended.

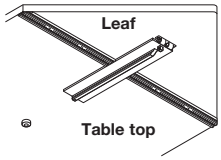

The table top rests on the extended sliding support.

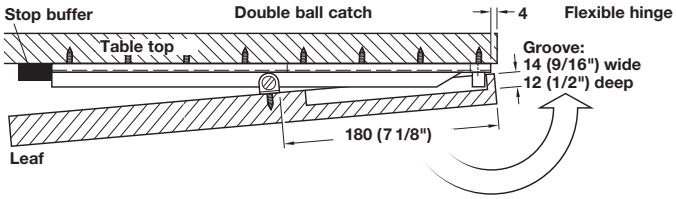

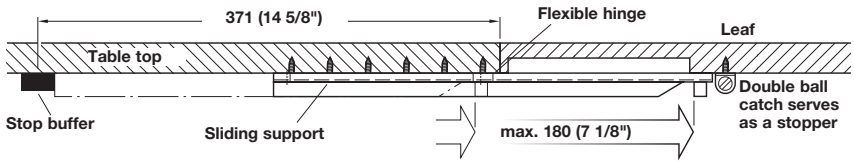

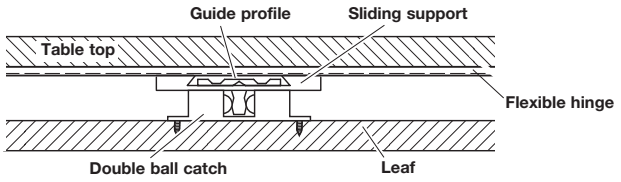

Flat Head #9

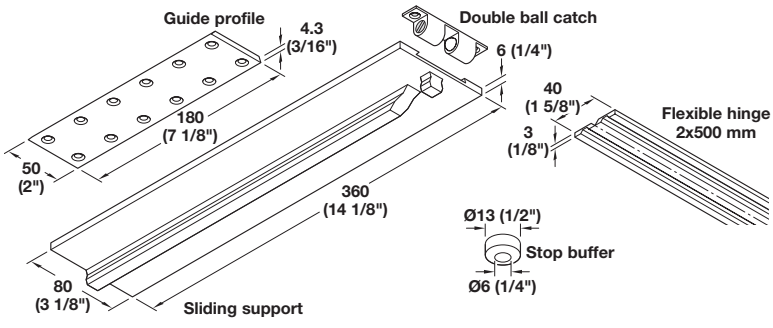

Possible table edge profiles:

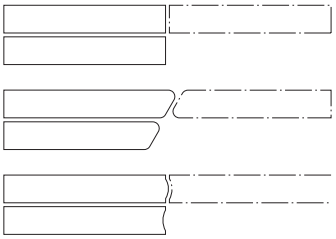

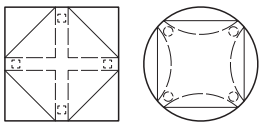

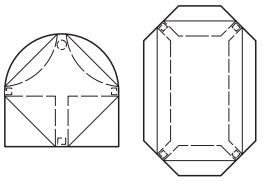

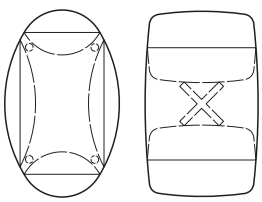

Flat head screws pages 12.7-12.8, 12.10, 12.13

Dimensional data not binding. Dimensions in mm, inches are approximate. We reserve the right to alter specifications without notice.

Leg Brackets

→ Table Fitting

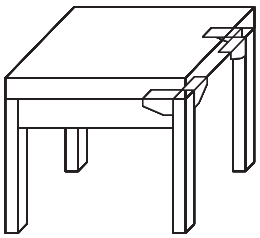
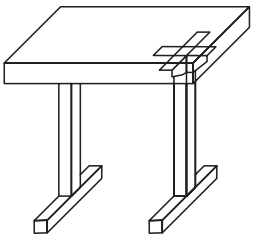
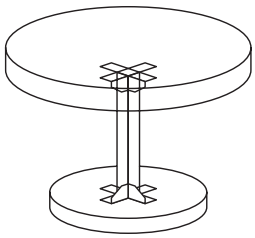

→ Angle Fitting

> With side holes for screw mounting to apron
> Allows for sturdy corner connections for tables, frames, cabinets, work benches, shelving, mobile tables, etc.
> Material: Steel

Finish	Item No.
nickel-plated	641.01.711

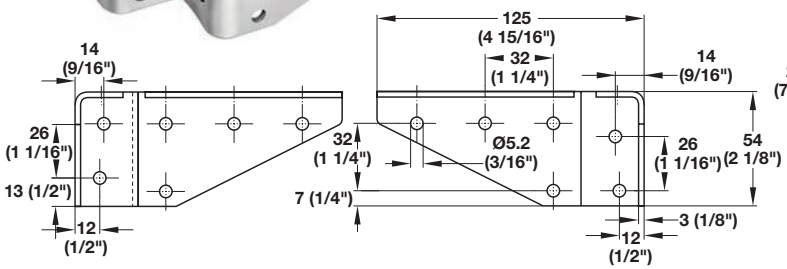

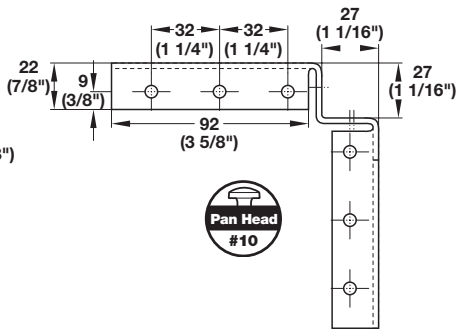

→ Corner Brace

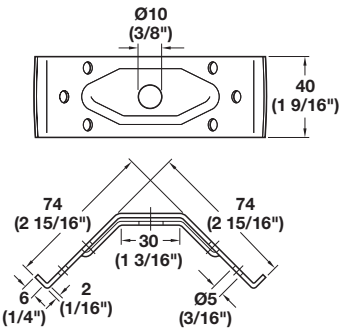

Pan Head #10

> Simple/economical attachment of table legs to frame
> The ends of the brace are set into grooves in frame
> The table leg is secured using the center hole
> Material: Steel, galvanized

	Item No.
	641.00.901

Note Tables designed using corner braces can be stored, packed and transported in RTA form.

Pan head screws pages 12.9-12.10

→ Anti-Sag Bars

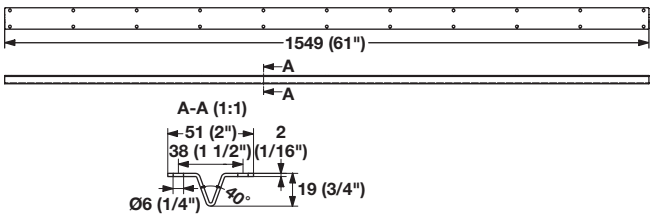

> To be used under table tops to keep from sagging
> Color: black

Length	Item No.
1549 (61")	630.46.382
1245 (49")	630.46.384
787 (31")	630.46.383

Supplied With
Wood screws

Dimensional data not binding. Dimensions in mm, inches are approximate. We reserve the right to alter specifications without notice.

Modesty Panel Clip System

→ Modesty Panel Bracket

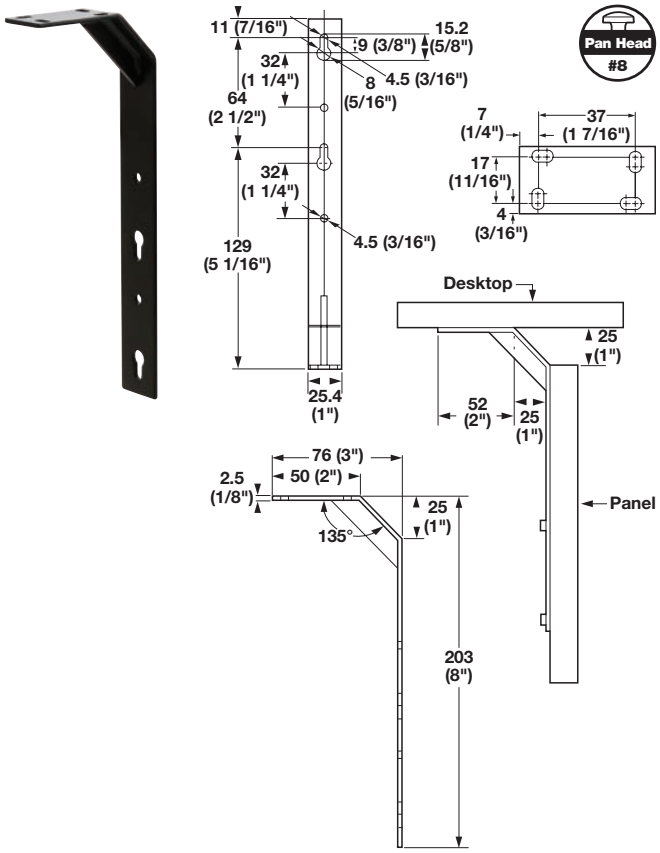

> Attaches metal or wood modesty panels, provided by end user
> Material: Steel

Color	Item No.
black epoxy	654.34.380

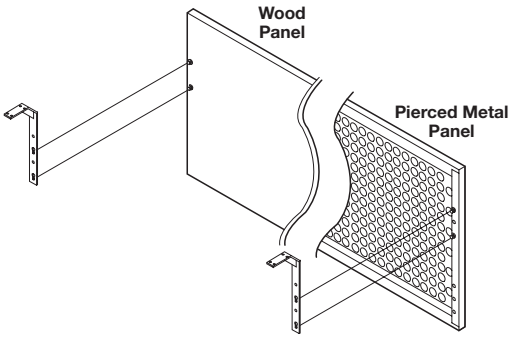

→ Draw Pull Catches

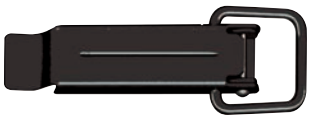

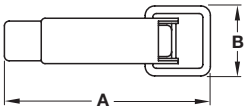

> Material: Steel; Color: black

A	B	Wire clamp Ø	Item No.
55 (2 3/16")	22 (7/8")	3 (1/8")	380.53.306
75 (3")	30 (1 3/16")	4 (5/32")	380.53.315

Note
Order strikes separately.

→ Strikes for Draw Pull Catches

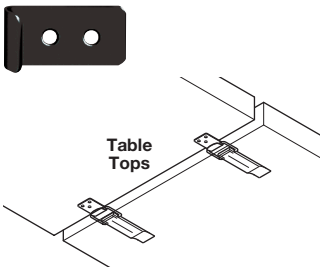

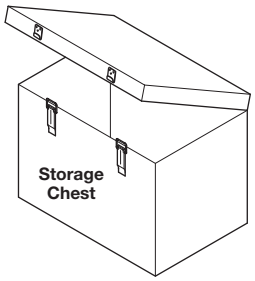

> Material: Steel; Color: black

Length	Width	Thickness	Item No.
28 (1 1/8")	13 (1/2")	1.3 (1/32")	380.65.306
24 (1")	18 (11/16")	2.0 (1/16")	380.65.315

Pan head screws pages 12.9-12.10

Dimensional data not binding. Dimensions in mm, inches are approximate. We reserve the right to alter specifications without notice.

Privacy Screen Brackets

> Holds privacy screens of various materials: glass, acrylic, acoustical, wood, etc.
> With various screw lengths to clamp panel thickness from 6-19 mm (1/4"-3/8")
> With rubber pads to protect panels when clamped
> Material: Aluminum, die-cast

→ Top Mount

> Screw mounted to the work surface

Finish	Item No.
white	818.67.700
silver metallic	818.67.900

Supplied With
2 pcs.
Screws
Pads

→ Edge Mount

> Screw mounted from under the work surface
> For top thickness: 25 mm (1")

Finish	Item No.
white	818.67.710
silver	818.67.910

Supplied With
2 pcs.
Screws
Pads

→ C-Clamp Bracket

> Clamps to top with thickness up to 57 mm (2 1/4")
> Supplied with M4 screws to clamp panel thickness from: 16–19 mm (5/8"–3/4")
> If thinner panel thickness is required, shorter M4 screws can be substituted, provided by end user
> With foam pad to protect work surface

Finish	Item No.
silver	818.99.990

→ Clamp Foot

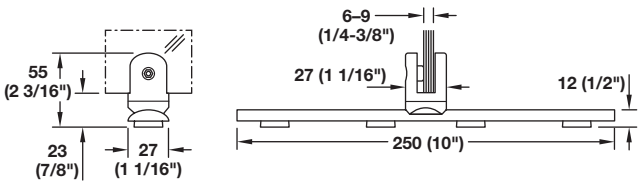

> For individual design of mobile hygiene protection elements
> With non-slip plastic glides on foot
> For glass thickness: 6–9 mm (1/4"–3/8")
> With glass clamp; freestanding, glass drilling and screw mounting to counter or table top not required
> Material: Stainless Steel

	Item No.
	785.95.081

Dimensional data not binding. Dimensions in mm, inches are approximate. We reserve the right to alter specifications without notice.

Turntables

> Economical turntables for small offices, entertainment centers, kitchens, etc.

→ Turntable

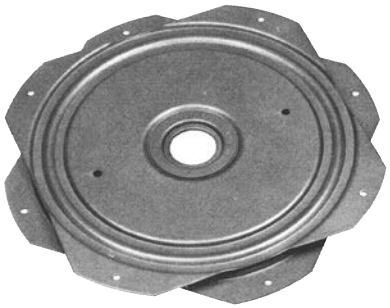

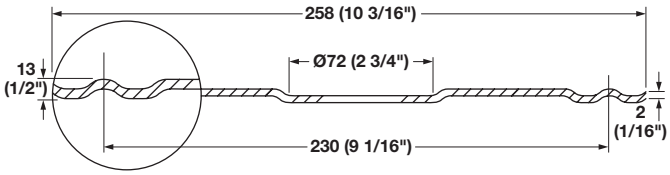

> Weight capacity: 120 kg (260 lbs.)
> Material: Steed, unfinished

	Item No.
	646.29.902

→ Turntable

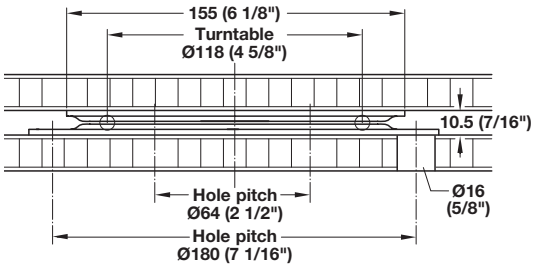

> Weight capacity: 150 kg (330 lbs.)
> Material: Steel, galvanized

	Item No.
	646.18.908

→ Turntable

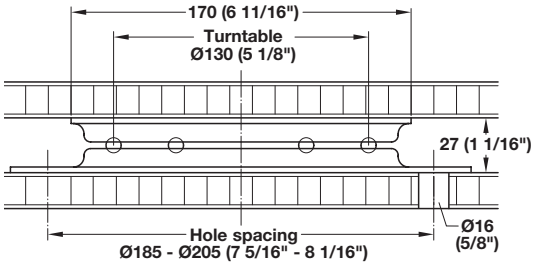

> Rotates 360°
> Ball bearing mounted
> Weight capacity: 100 kg (220 lbs.)
> Material: Steel, unfinished

	Item No.
	646.15.014

→ Turntable, spring loaded

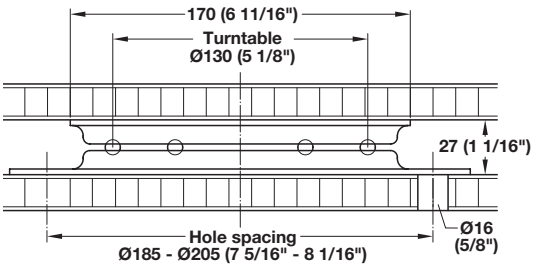

> Rotates 90° to the right and left sides
> Ball bearing mounted
> After turning, a steel spring returns the turntable to its original position
> Weight capacity: 100 kg (220 lbs.)
> Material: Steel, unfinished

	Item No.
	646.15.023

Dimensional data not binding. Dimensions in mm, inches are approximate. We reserve the right to alter specifications without notice.

7

HÄFELE

SLIDING AND ROLLER SHUTTER SYSTEMS

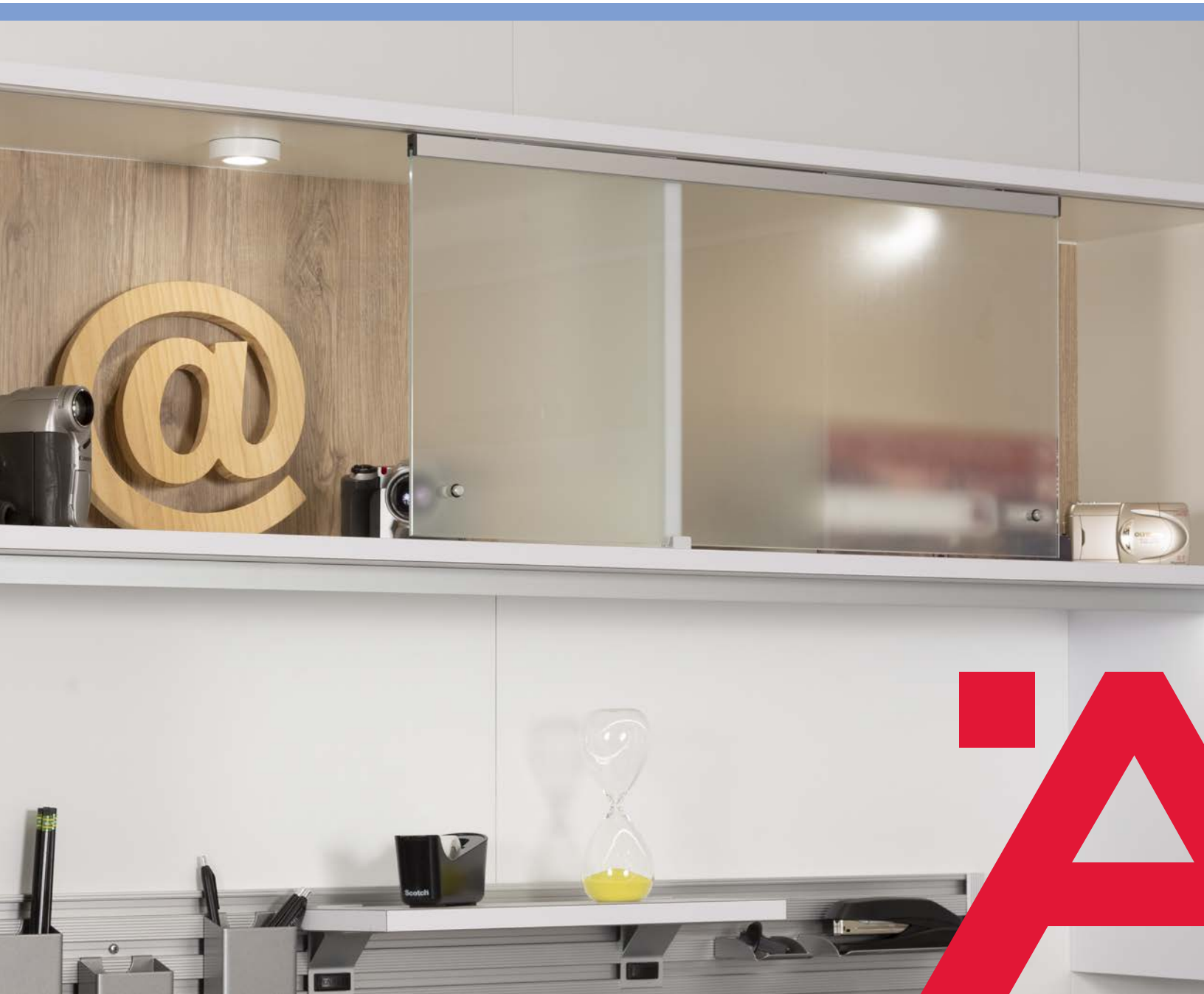

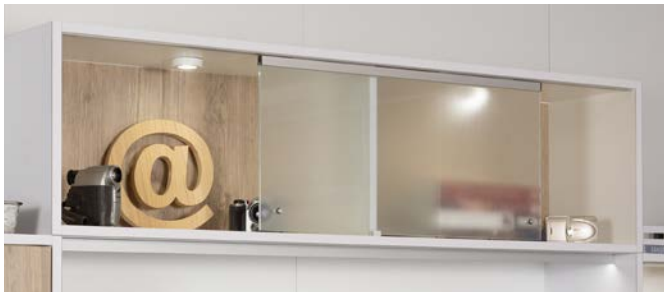

Information

Range of Options 7.4–7.7
Glass Door Preparation 7.8

Sliding Wood Door Fittings

Guide and Glide Fittings 7.9–7.13
Häfele Slido Classic 20 IF/VF 7.14–7.15
F-Line21 12C 7.16–7.17
F-Line21 20C 7.18–7.19
F-Line21 40 C 7.20–7.21
F-Line21 20A 7.22–7.23
F-Line15 55A 7.54–7.55
Hawa Clipo 16 H IF 7.24–7.25
Clipo 26 H IF 7.26–7.27
Clipo 36 H IF 7.28–7.29
Clipo 16 H MF 7.30–7.31
Clipo 16 HM IF 7.32–7.33
Clipo 36 HM IF 7.34–7.35
Combino 20/35 H IF 7.36–7.37
Combino 65 H IF 7.38–7.39
Combino 20/35 H VF 7.40–7.41
Combino 65 H VF 7.42–7.43
Combino 65 H MF 7.44–7.45
Combino L 40 7.46–7.47
Regal A 25 H VF 7.48–7.49
Regal B 25 H VF 7.50–7.51
Hangar 14/28 IF 7.52–7.53
S 80 7.56–7.57

Coplanar Door Fittings

Häfele Slido F-Flush52 20A 7.58–7.59
Hawa Frontino 20 H OS FB 7.60
Frontino 20 H FB 7.61
Frontino 40 FB 7.62–7.63
Finetta F-Flush51 10A 7.64–7.67
F-Flush52 20A/20B 7.68–7.69
F-Flush53 50A 7.70–7.71
F-Flush54 70A 7.72–7.73

Sliding Glass Door Fittings

Häfele Slido F-Line21 12D 7.74–7.75
F-Line21 20D 7.76–7.77
F-Line14 25A 7.78–7.79
Hawa Clipo 16 GPK/GPPK IF 7.80–7.81
Clipo 36 GPK/GPPK IF 7.82–7.83
Clipo 36 G IF 7.84–7.85
Clipo 26 GR IF 7.86–7.87
Regal A 25 GR VF 7.88–7.89

Accessories

Profile Strips/Panel Retainers 7.90
Planofit Straightening System 7.91
Häfele Planomix 7.92
Straightening Fitting 7.93

Dimensional data not binding. Dimensions in mm, inches are approximate. We reserve the right to alter specifications without notice.

Folding Cabinet Door Fittings

Concertina 7.94–7.97
Häfele Slido F-Fold 61 25A/50A 7.98–7.99

Vertical Sliding Door Fittings

HAWA Libra 20 H 7.100–7.101
HAWA Libra 20 H Synchro 7.102–7.103
Finetta F-Line32 23A 7.104–7.105

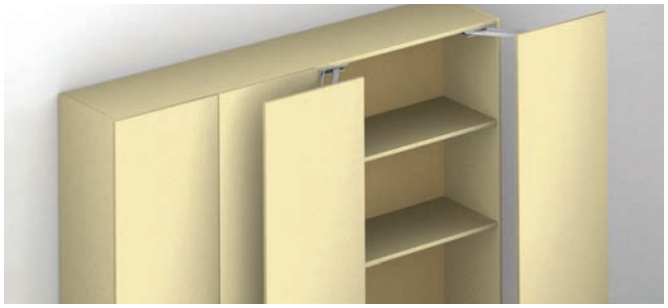

Lateral Swing Fittings

Swingfront FB 20 7.106–7.107
LIN–X800 7.108–7.109

Pivoting Pocket Door Fittings

WF and MF Systems 7.110–7.111
RP 42/60 System 7.112–7.115
Accuride 123/1234 7.116–7.118
Accuride CB 1321 7.119
Häfele Slido F-Park71 16A 7.120–7.121
Accuride 1332/1432 7.122–7.123
Finetta F-Park71 30A 7.124–7.125
HAWA Concepta 25/30/40/50 7.126–7.131
HAWA Folding Concepta 25 7.132–7.135

Roller Shutters

Box Milano and Milano Appliance Garage Kit 7.136–7.137
Professional Grade Custom Tambour Doors
Versions A1, A2, A3 Module 7.138–7.139
Version B 7.140–7.141
Versions C1, C2, C3 Module 7.142–7.144

Dimensional data not binding. Dimensions in mm, inches are approximate. We reserve the right to alter specifications without notice.

SLIDING DOORS

WIDE RANGE OF OPTIONS

A wide range of design options are available with sliding doors, saving space and creating room to live. High quality furniture, walk-in closets, flexible room dividers and concealed home offices are easy to implement. Häfele offers a wide, constantly evolving range of products with outstanding quality and solutions for complex requirements.

Häfele's own high quality brands are Slido and Aluflex. Slido is sliding door fittings for furniture with wood or glass doors and aluminum frames. Aluflex is the flexible aluminum frame sliding door system for dividing rooms, creating storage spaces and walk-in closets.

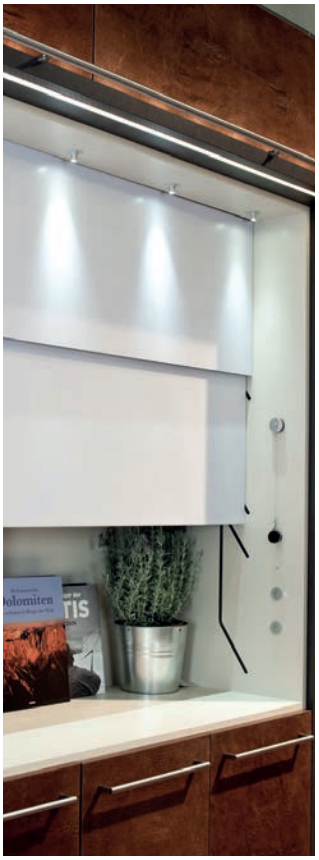

Dimensional data not binding. Dimensions in mm, inches are approximate. We reserve the right to alter specifications without notice.

Horizontally Running Sliding Doors

→ Flush Fitted FB

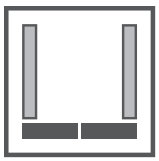

> The doors are on the same level in the closed position (“flush-fitting”)
> The side, top and base of the cabinet are concealed
> Allows for greater design freedom

→ Vorfront VF

> The doors run in front of the cabinet
> The side, top and base of the cabinet are concealed
> Large front panels can be easily moved

→ Infront IF

> The doors run inside the cabinet
> The side, top and base of the cabinet are visible
> Multitude of use and design options

→ Mixfront MF

> The doors run inside and in front of the cabinet
> The top is visible and the base of the cabinet is concealed
> Easy and safe installation

→ Vorfront-Infront

> A special version of Infront
> One door runs inside the cabinet, and the other runs in front of the cabinet
> The top and base of the cabinet are both concealed by the front door

→ Folding Doors

> The doors are folded into a package, similar to an accordion, allowing the cabinet to be almost completely open
> Recommended for extremely wide wall units

→ Pivot Sliding Doors

> A combination of a hinged door and sliding door
> The door is opened with a rotating movement and concealed in the cabinet
> The full width of the cabinet is open, without concealing any of the inside

Floor to Ceiling

> The doors run between the floor and the ceiling
> Rooms can be designed and partitioned, replacing hinged doors and making use of recesses and storage spaces

→ Vertically Running Sliding Doors

> The sliding doors run from top to bottom
> The ambience of the room is changed

→ Tambour Doors

> Tambour doors have a roller shutter consisting of profiles, making it possible to have large openings
> Tambour doors can run vertically or horizontally

Dimensional data not binding. Dimensions in mm, inches are approximate. We reserve the right to alter specifications without notice.

Construction

The type of application that is selected, e.g. Infront or Vorfront, determines the construction of the furniture. Other considerations for the construction are the weight of the door and the size ratio (height to width) of the door.

→ Definition of Terms

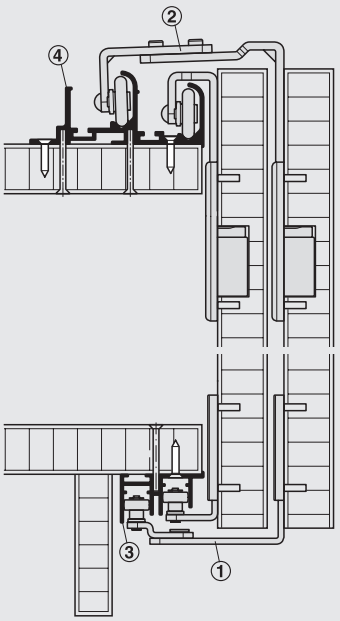

① Guide
Guides consist of either a steel or aluminum bracket with a friction bearing mounted roller, or simply a plastic pin that glides along a track.

② Running Gear
The running gear is attached to the door. It represents the connection between the door and the cabinet. Running gear consists of a steel or aluminum bracket with either ball bearing mounted or friction bearing mounted plastic rollers.

③ Guide Track
Guide tracks are needed to vertically align and prevent the doors from twisting. They are generally aluminum, but can be plastic.

④ Running Track
The running tracks control the movement direction of the doors. The running gears are fitted in the running track. Tracks are usually made from aluminum, but can be steel. Smoother running is achieved using aluminum tracks.

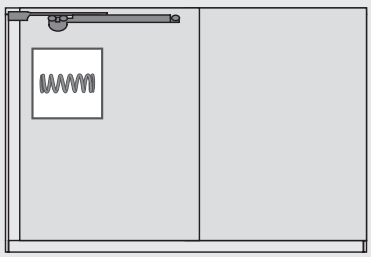

Soft Closing Mechanism
Soft closing mechanisms are usually integrated in the fitting and dampen the movement of the doors when they are moving towards the end position. Häfele offers the Smuso soft closing system which can be optionally fitted to the cabinet. The soft closing system (soft and self-closing mechanism), allows doors to be quietly closed. The cabinet and the fittings are protected, increasing the life of the furniture.

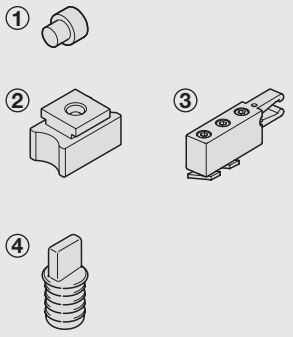

① Buffer
Fitted to the door, the buffer prevents the door from slamming against the side panel or the following door.

② Door Stopper
The door stopper, mounted in the tracks, cushions the impact and protects the cabinet/door from damage.
The door stopper with clip-in door stopper ③ holds the door in the open and/or closed position.

④ Bottom Guide
A sliding door is guided in the furniture with a bottom guide. The bottom guide is used if a guide track is not being used or if the door guide has to be concealed.

Dimensional data not binding. Dimensions in mm, inches are approximate. We reserve the right to alter specifications without notice.

→ Synchronous/Symmetrical Opening

Both doors open simultaneously. A large area becomes visible with a single movement.

→ Weight Calculation and Material Selection

The weight of the door is important for selecting the correct fitting. The gross density of the door material and its specific properties must be factored in – for example, chipboard weighs less than MDF because it is not as dense. If a mirror is attached to a door, the weight of the mirror must be factored in during the calculation of the door weight, as well as the weight of the fittings (straightening fittings, handles, sliding door fittings).

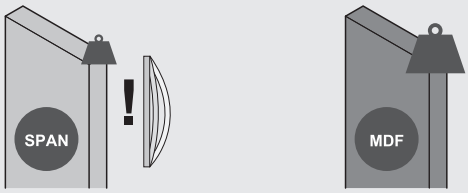

Because of its higher density, MDF is much more stable than chipboard and will not warp as easily. Extremely large and/or thin doors and materials have a tendency to warp, therefore, a straightening fitting must be used for alignment and stabilization (e.g. Planofit). Doors that are already warped can also be straightened with Planofit.

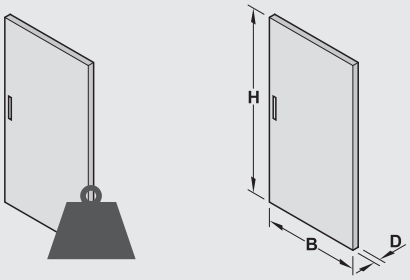

The following must always be taken into consideration when constructing the door: The door must not be taller than 3 times its width.
Hmax = 3 x W
The weight of the door is calculated from the dimensions of the door and the gross density of the material that has been used (see table below).
Weight in kg = H x W x D x density
To assist with the weight calculation, typical materials that are used to make sliding doors have been calculated in kg per m^2 in the table.

→ Gross Density Weight

Material	Density kg/m3
Chipboard	650–750
MDF board, untreated	600–900
Plywood	500–800
Glass	2500
Solid wood, spruce	approx. 450
Solid wood, beech	approx. 700
Solid wood, oak	approx. 680
Solid wood, teak	approx. 620
Solid wood, pine	approx. 550

→ Weight

Material	Weight kg/m^2
Chipboard 16 mm	11
Chipboard 19 mm	13
Chipboard 22 mm	14.5
Chipboard with mirror (16 mm + 3 mm mirror)	18.5
Chipboard with mirror (19 mm + 4 mm mirror)	23
MDF 19 mm	16
MDF 22 mm	19
Glass/mirror 6 mm	15
Glass/mirror 8 mm	20
Spruce/fir 19 mm	9.5
Hardwood (beech) 19 mm	14.2

Dimensional data not binding. Dimensions in mm, inches are approximate. We reserve the right to alter specifications without notice.

→ Glass Preparation Details

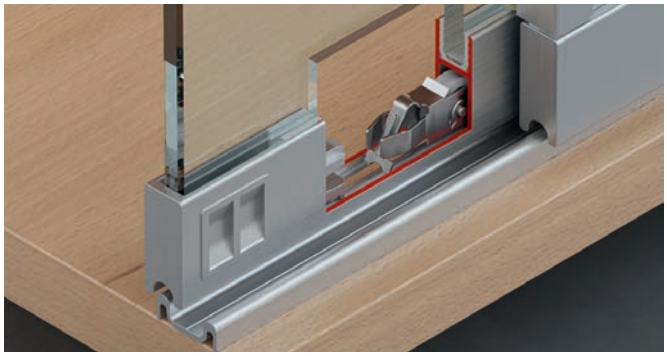

Use of glass for the doors:
Different types of glass can be used, tempered safety glass or laminated glass. Safety glass is pre-stressed and hardened and provides a certain degree of safety in the event of breakage.
Pure float glass (basic glass or window glass) is not recommended for safety reasons.

A basic distinction is made as to whether the sliding door fitting is glued or clamped, or whether glass preparation is required.
If glass preparation is required, this is usually specified when the glass is ordered. Additional holes cannot be made in safety glass after the glass has been manufactured. It is important to ensure the correct drill hole specifications are provided before the glass is manufactured. If the fitting is going to be glued on, a suitable adhesive as well as the correct procedure must be used when gluing.

Types of Running Gear Installation

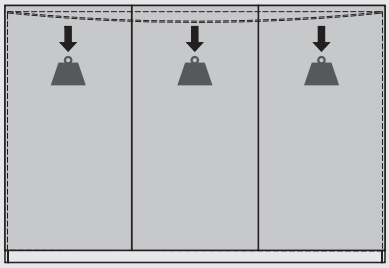

Sliding doors are “top running” and “bottom running”, meaning the running gears and the running track of the sliding door fitting are positioned either at the top or base of the cabinet. A guide is also installed opposite the running gears at the top or bottom.

If a top running fitting is selected, the track is attached to the top of the cabinet, and the entire weight of the door is transmitted to the top of the cabinet. During construction it must be ensured that the weight of the door is sufficiently distributed or that supporting intermediate panels are used in order to prevent sagging.

The running track does not prevent the cabinet top from sagging.

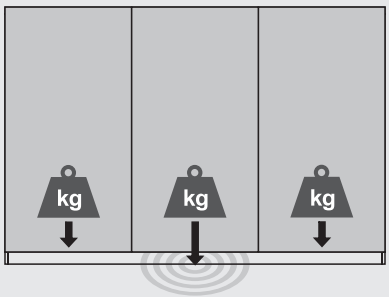

Bottom running fittings are often used for extremely heavy doors, or if the structural situation makes it impossible to use a top running door. In this case the running track is attached to the base of the cabinet, and the weight of the door is transmitted via the base of the cabinet into the plinth on the floor. This type of structure is extremely stable.

Installation and Assembly

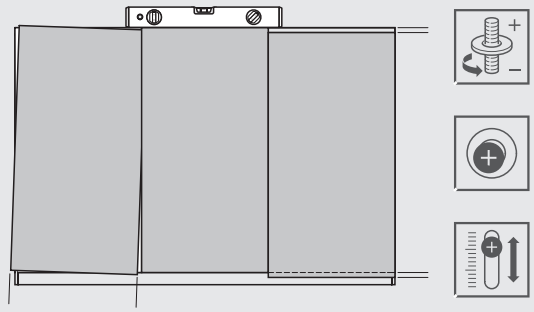

It is important in all sliding door applications for the running track and cabinet to have perfect horizontal alignment! With the majority of fittings, the door is adjusted using either threaded or eccentric screws or via a slot. In order to prevent the cabinet from toppling it must be secured to the wall.

Dimensional data not binding. Dimensions in mm, inches are approximate. We reserve the right to alter specifications without notice.

Guide and Glide Fittings

→ Guide Bolt

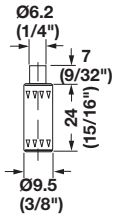

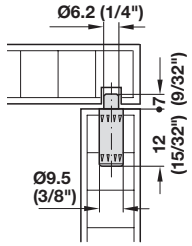

> Door weight: max. 10 kg (22 lbs.)
> With spring-loaded pin
> Material: Nylon

Color	Item No.
white	402.90.006

→ Support Track

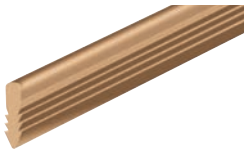

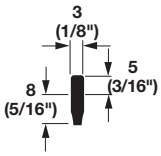

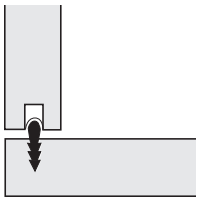

401.01.111
without 404.29.105

> Door weight: max. 10 kg (22 lbs.)
> Length: 2.5 m (8' 2 7/16")
> Press-fit in groove
> Material: Plastic

Color	Item No.
brown	401.01.111

→ Glide

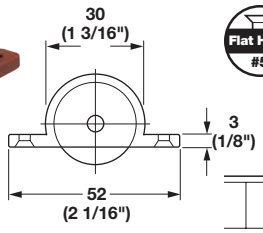

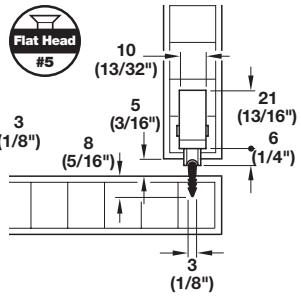

401.01.111
with 404.29.105

> Door weight: max. 20 kg (44 lbs.)
> With plastic-coated ball bearing roller
> Recess mounted
> Material: Plastic

Color	Item No.
brown	404.29.105

Flat head screws pages 12.7–12.8, 12.10, 12.13

Dimensional data not binding. Dimensions in mm, inches are approximate. We reserve the right to alter specifications without notice.

Guide and Glide Fittings

→ Double Door Guide Track

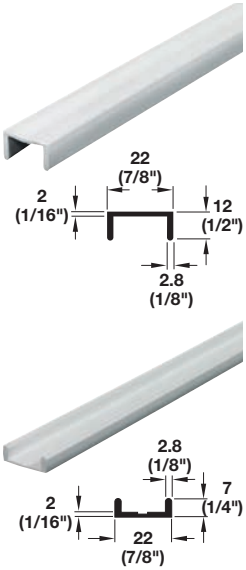

Sliding door fitting installation

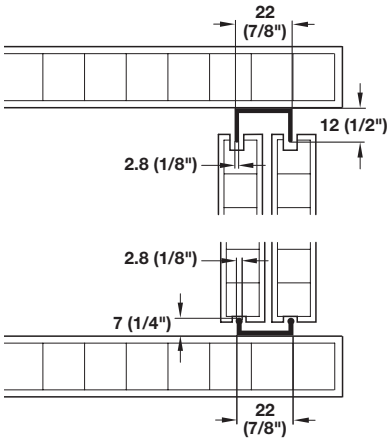

> Without screw holes, for tack gun attachment
> Recommended wood thickness: 16 mm (5/8")
> Door weight: max. 10 kg (22 lbs.)
> Length: 2.5 m (8' 2 7/16")
> Material: Plastic

Color	Upper	Lower
white RAL 9010	401.33.811	401.33.611

→ Double Door Guide Track

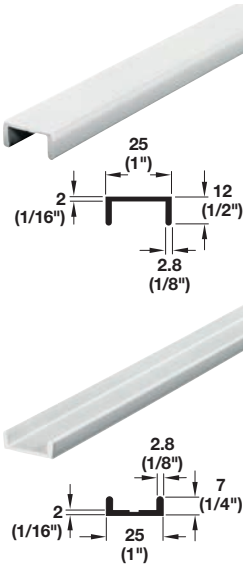

Sliding door fitting installation

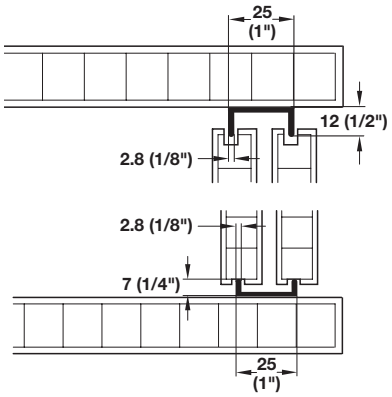

> Without screw holes, for tack gun attachment
> Recommended wood thickness: 19 mm (3/4")
> Door weight: max. 10 kg (22 lbs.)
> Length: 2.5 m (8' 2 7/16")
> Material: Plastic

Color	Upper	Lower
white RAL 9010	401.33.810	401.33.610

→ Glide

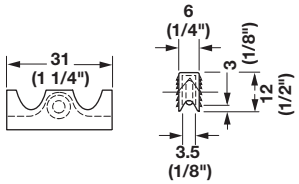

> With brass roller
> Press-fit type
> For lower support tracks
> Material: Nylon

Color	Item No.
natural	402.50.002

Dimensional data not binding. Dimensions in mm, inches are approximate. We reserve the right to alter specifications without notice.

Guide and Glide Fittings

> Door weight: max. 12 kg (26 lbs.)
> Fittings form combinations for sliding doors with upper and lower guides
> Guide track is designed to be used both at the top and bottom of the cabinet
> Bottom roller guide glides friction-free in the track

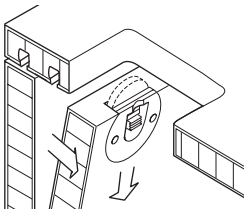

→ Guide Track

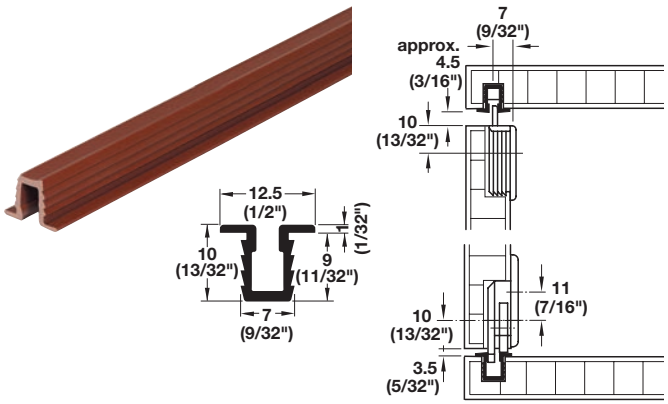

> Press-fit
> With flanged edges and barbed shoulders
> For top and bottom of cabinet
> Material: Plastic

Color	2.5 m (8' 2 7/16")	3 m (9' 10 1/8")
brown	404.14.111	404.14.133
white	404.14.701	404.14.713
black	–	404.14.313

→ Lower Roller

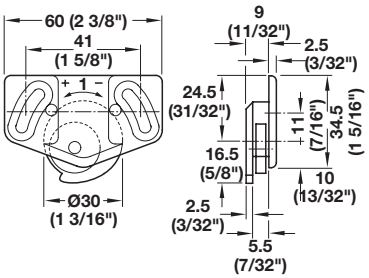

> Vertically adjustable with double bearing mounted axle
> Screw mounts to the sliding door
> Material: Plastic

Color	Item No.
brown	404.22.151

→ Upper Guide

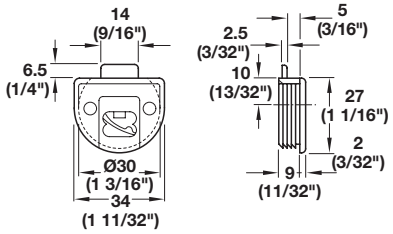

> Spring-loaded, press-fits and screw mounts to the sliding door
> Material: Plastic

Color	Item No.
brown	404.21.154

→ Upper Guide

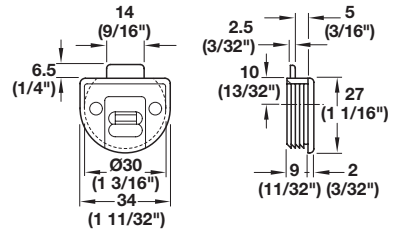

> Lockable, press-fits and screw mounts to the sliding door
> Material: Plastic

Color	Item No.
brown	404.21.109

→ Lower Guide

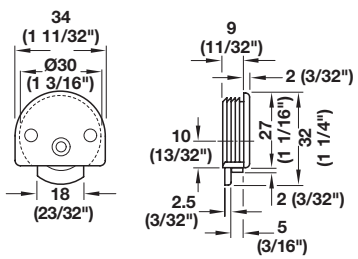

> With double bearing mounted axle
> Press-fits and screw mounts to the sliding door
> Material: Plastic

Color	Item No.
brown	404.22.106

Dimensional data not binding. Dimensions in mm, inches are approximate. We reserve the right to alter specifications without notice.

Guide and Glide Fittings

> Door weight: max. 12 kg (26 lbs.)
> Fittings form combinations for sliding doors with upper and lower guides
> Guide track is designed to be used both at the top and bottom of the cabinet
> Bottom roller guide glides friction-free in the track

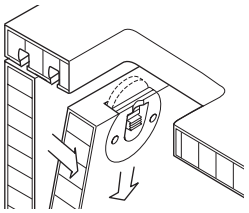

→ Guide Track

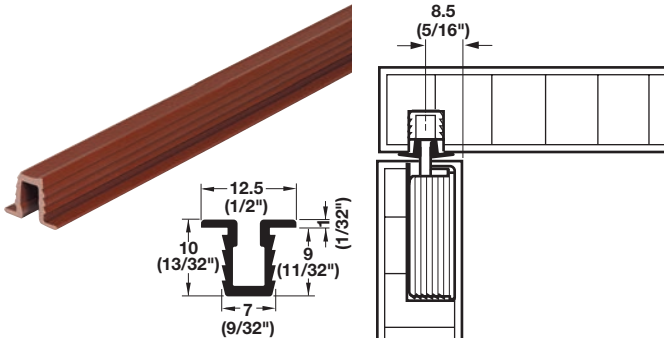

> Press-fit
> With flanged edges and barbed shoulders
> For top and bottom of cabinet
> Material: Plastic

Color	2.5 m (8' 2 7/16")	3 m (9' 10 1/8")
brown	404.14.111	404.14.133
white	404.14.701	404.14.713
black	–	404.14.313

→ Upper Guide

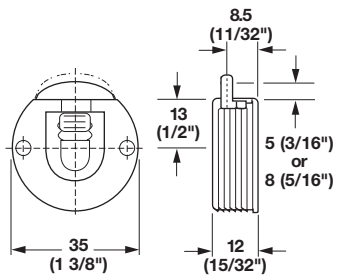

> Press-fit
> Lockable at 5 mm (3/16") and 8 mm (5/16")
> Material: Plastic

Color	Item No.
brown	404.19.118
white	404.19.716

→ Lower Roller

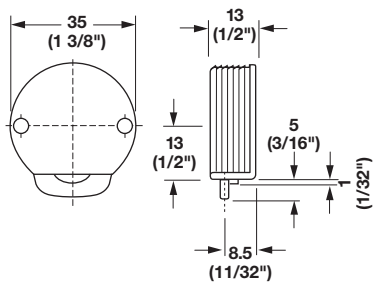

> Press-fit
> With steel spindle, nylon roller and guide
> Material: Plastic

Color	Item No.
brown	404.20.120
white	404.20.728

→ Lower Roller

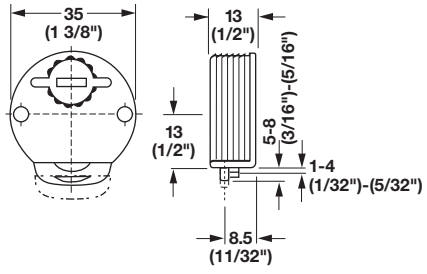

> Press-fit
> With vertically adjustable steel spindle, nylon roller and guide
> Material: Plastic

Color	Item No.
brown	404.20.139
white	404.20.737

Dimensional data not binding. Dimensions in mm, inches are approximate. We reserve the right to alter specifications without notice.

Guide and Glide Fittings

> Door weight: max. 12 kg (26 lbs.)
> Fittings form combinations for sliding doors with upper guides and lower rollers

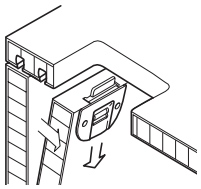

→ Guide Track

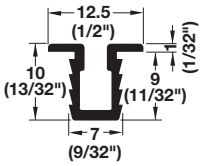

> Press-fit; with flanged edges and barbed shoulders
> For top and bottom of cabinet
> Material: Plastic

Color	2.5 m (8’ 2 7/16”)	3 m (9’ 10 1/8”)
brown	404.14.111	404.14.133
white	404.14.701	404.14.713
black	–	404.14.313

→ Upper Guide

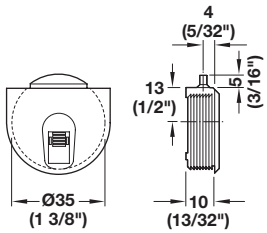

> Press-fit; spring-loaded
> Material: Plastic

Color	Item No.
brown	404.06.102
white	404.06.700

→ Door Stop

Optimal location of door stop:

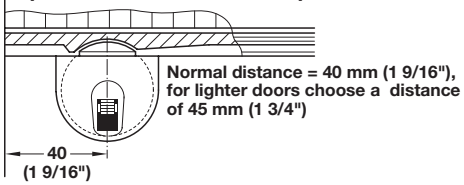

> For spring-loaded upper guides above
> Material: Plastic

Color	Item No.
natural	404.06.004

Note
The door stop should be inserted into the guide track before guide track is pressed into groove, order separately.

Lower rollers and running tracks page 7.11

Dimensional data not binding. Dimensions in mm, inches are approximate. We reserve the right to alter specifications without notice.

Häfele Slido F-Line19 20A

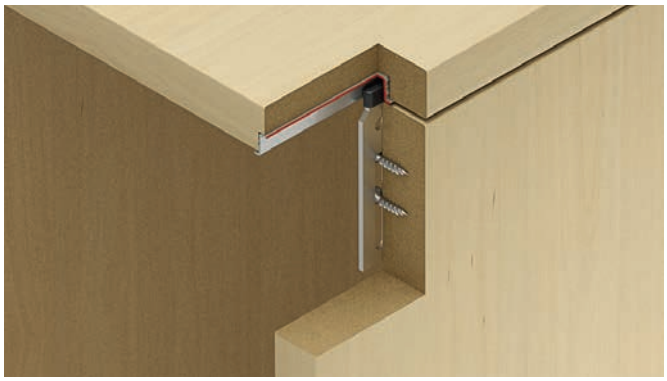

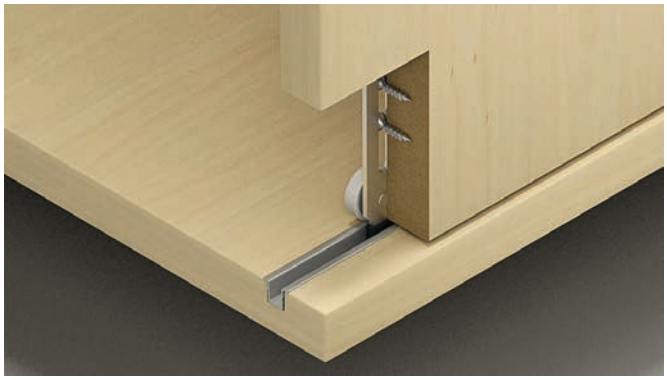

Infront (Inset)

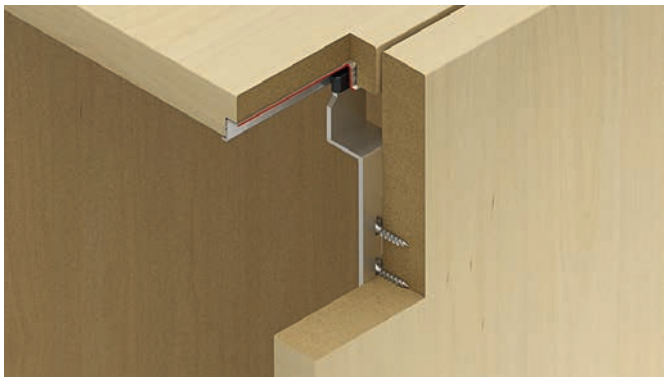

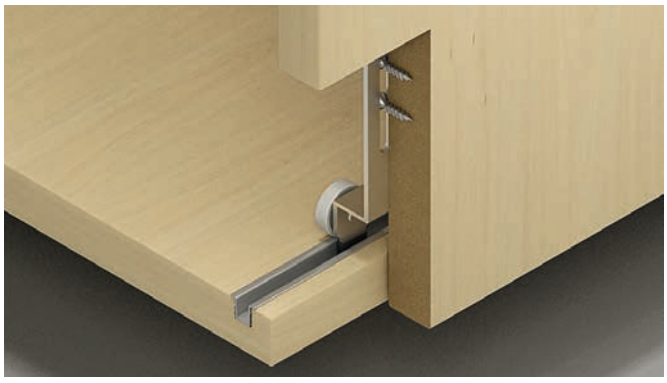

Vorfront (Overlay)

> Door weight: max. 20 kg (44 lbs.)
> For single-track wood sliding doors
> Friction bearing guided running gear
> Guides and running gear are screw mounted
> Track is groove mounted

Installation

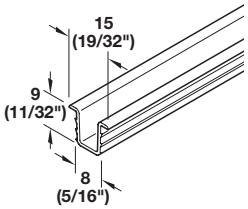

Running and guide track dimensions

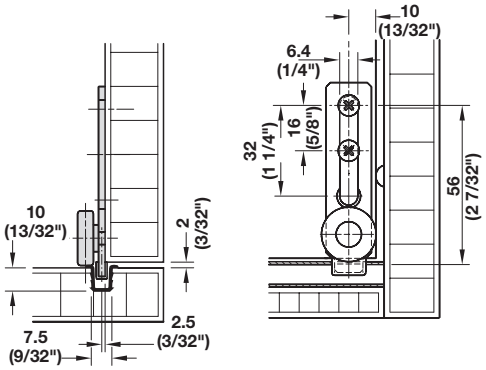

Straight version, Infront (Inset) installation

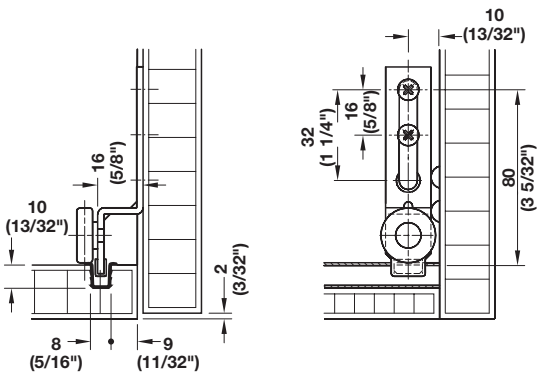

Cranked version 16 mm (5/8"), Vorfront (Overlay) installation

Dimensional data not binding. Dimensions in mm, inches are approximate. We reserve the right to alter specifications without notice.

→ Häfele Slido F-Line19 20A

	Version	Supplied with	Item No.
For 1 door	Straight running gear, Infront (Inset)	2 top guides, straight 2 running gears, straight	402.27.000
	Cranked running gear, Vorfront (Overlay)	2 top guides, cranked 16 mm (5/8") 2 running gears, cranked 16 mm (5/8")	402.27.001

Note
The complete set is always delivered without mounting hardware and running and guide tracks, please order separately.

→ Tracks

Description		Material	Finish	Length	Item No.
Running and guide track, for top and bottom of cabinet, groove mounted		Aluminum	mill	2.54 m (8' 4")	402.27.792
				5 m (16' 4 7/8")	402.27.605

Dimensional data not binding. Dimensions in mm, inches are approximate. We reserve the right to alter specifications without notice.

Häfele Slido F-Line21 12C

- > Door weight: max. 12 kg (26 lbs.)
- > Door height: max. 1,200 mm (3' 11 1/4")
- > Door width: max. 1,000 mm (3' 3 3/8")
- > Door thickness: 16–19 mm (5/8"–3/4")
- > Height adjustment: +/- 1.5 mm (1/16") on running gear using adjusting wheel
- > Mounts quickly and easily
- > Space saving compared to hinged doors
- > Optional soft closing mechanism

soft&silent

Drilling pattern

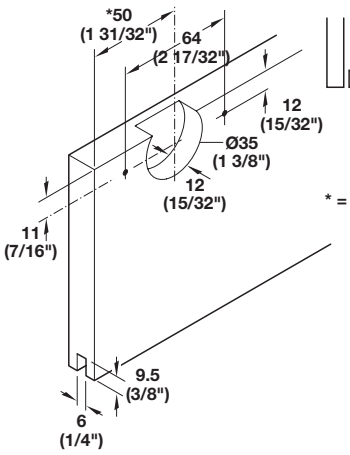

Door overlap

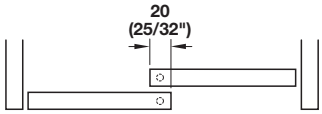

* = + 43 (1 11/16") when using service port

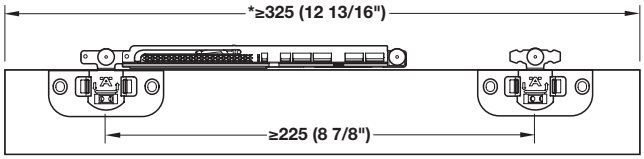

Minimum door width with one soft closing mechanism.
*Add 43 mm (1 11/16") when using service port.

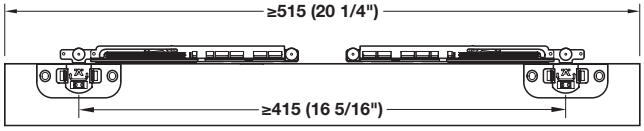

Minimum door width with two soft closing mechanisms.

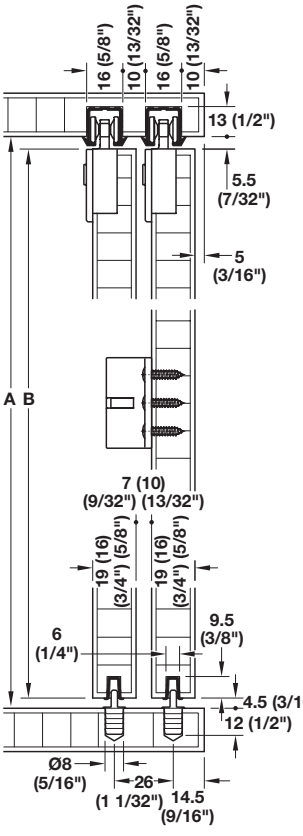

Groove mounted track

A = internal cabinet height
B = internal cabinet height minus 10 mm (13/32")

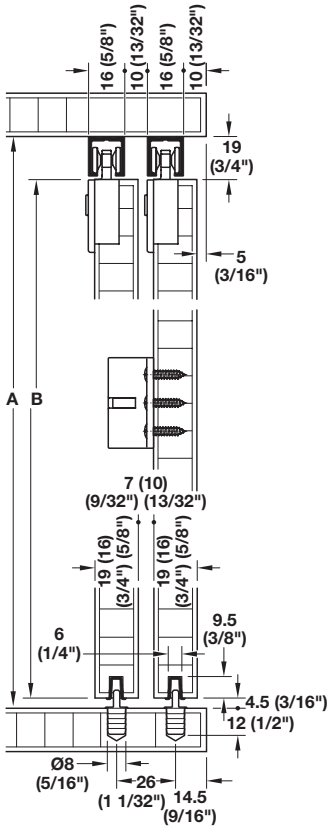

Screw mounted track

A = internal cabinet height
B = internal cabinet height minus 23.5 mm (15/16")

Door panel installation

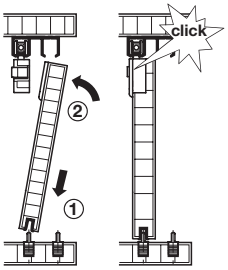

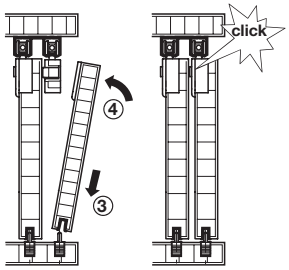

Dimensional data not binding. Dimensions in mm, inches are approximate. We reserve the right to alter specifications without notice.

→ Häfele Slido F-Line21 12C Set

	Version	Supplied with	Item No.
For 2 doors	With clip-in door stopper	4 running gears 4 door stoppers with clip-in door stopper 1 door follower 2 service ports 2 guides 1 mounting aid	402.33.013
	With soft closing mechanism on one side	4 running gears (2 with soft closing mechanism left/right) 4 door stoppers (2 with clip-in door stopper/2 for soft closing mechanism) 1 door follower 2 guides 1 mounting aid	402.33.014
	With soft closing mechanism on both sides	4 running gears with soft closing mechanism 4 door stoppers for soft closing mechanism 1 door follower 2 guides 1 mounting aid	402.33.015

Supplied With
1 set

Note
Please order running and guide tracks separately. The pitch length of the running gears must be min. 225 mm (8 7/8") with soft closing mechanism on one side and min. 415 mm (16 5/16") with soft closing mechanism on both sides. Service port cannot be used in combination with running gear with soft closing mechanism (service port cannot be ordered separately).

→ Tracks and Accessories

Description		Min. cabinet top thickness	Material	Finish	Length	Item No.
Single upper running track, for glue mounting into 16 mm (5/8") groove or for screw mounting with 3.0 mm flat head screws		19 (3/4") (gluing)	Aluminum	mill	2.5 m (8' 2 7/16")	402.33.642
		30 (1 3/16") (screw mount)			3.5 m (11' 5 13/16")	402.33.643
Double upper running track, for glue mounting into 16 mm (5/8") groove or for screw mounting with 3.0 mm flat head screws		19 (3/4") (gluing)	Aluminum	mill	2.5 m (8' 2 7/16")	402.33.652
		30 (1 3/16") (screw mount)				
Single upper running track, for screw mounting		–	Aluminum	silver colored anodized	2.5 m (8' 2 7/16")	402.30.642
Double upper running track, for screw mounting		–	Aluminum	silver colored anodized	2.5 m (8' 2 7/16")	402.30.652
Lower guide channel, for glue mounting into 6 mm (1/4") groove		–	Plastic	gray	2.5 m (8' 2 7/16")	402.30.802
					3.5 m (11' 5 13/16")	402.30.803
Flat head screw 3.0 x 1/2", Phillips drive, for screw mounted upper running tracks		–	Steel	zinc-plated	12 mm (1/2")	402.33.010

Note
Polyurethane glue recommended for groove mounted tracks.

Flat head screws pages 12.7–12.8, 12.10, 12.13

Dimensional data not binding. Dimensions in mm, inches are approximate. We reserve the right to alter specifications without notice.

Häfele Slido F-Line21 20C

- > Door weight: max. 20 kg (44 lbs.)
- > Door height: max. 1,400 mm (4' 7 1/8")
- > Door width: max. 1,250 mm (4' 1 3/16")
- > Door thickness: 16–19 mm (5/8"–3/4")
- > Door width: >350 mm (13 3/4") with soft closing mechanism on one side, >530 mm (20 7/8") with soft closing mechanism on both sides
- > Height adjustment: +/- 2 mm (1/16") on running gear using adjusting wheel
- > Mounts quickly and easily
- > Space saving compared to hinged doors
- > Optional soft closing mechanism

soft&silent

Drilling pattern

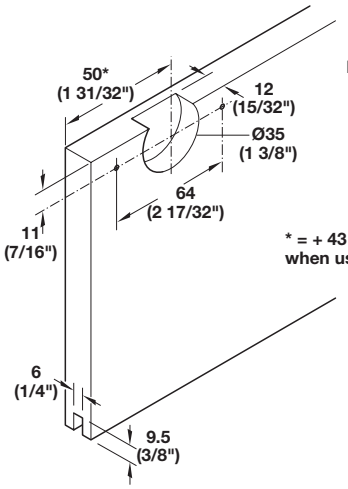

Door overlap

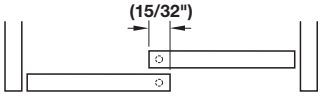

* = + 43 (1 11/16")
when using service port

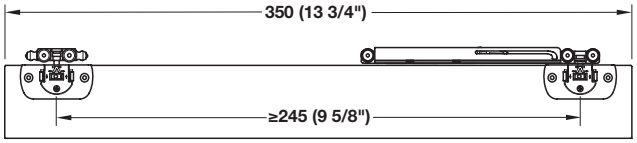

Minimum door width with one soft closing mechanism.
* Add 43 mm (1 3/16") when using service port.

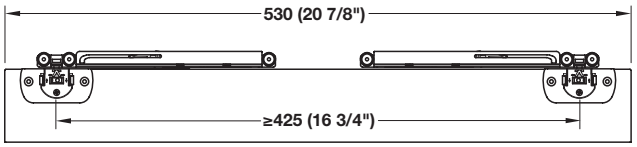

Minimum door width with two soft closing mechanisms.

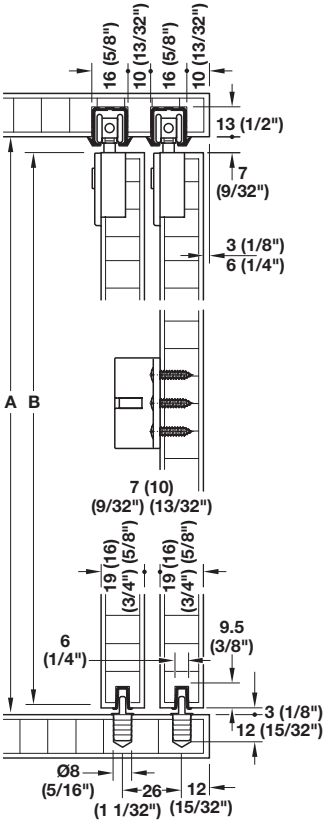

Groove mounted track

A = internal cabinet height
B = internal cabinet height minus 10 mm (13/32")

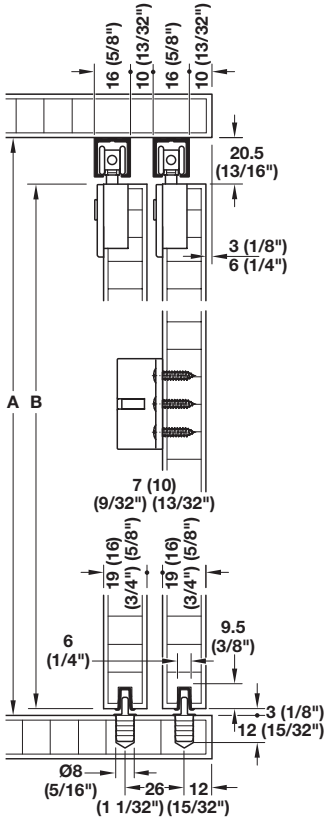

Screw mounted track

A = internal cabinet height
B = internal cabinet height minus 23.5 mm (15/16")

Door panel installation

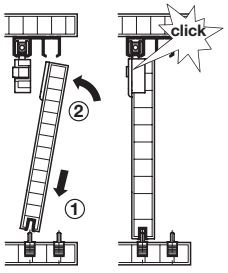

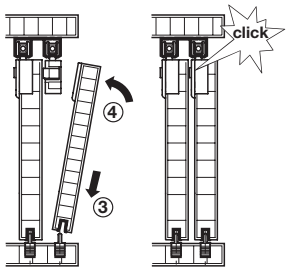

Dimensional data not binding. Dimensions in mm, inches are approximate. We reserve the right to alter specifications without notice.

→ Häfele Slido F-Line21 20C Set

	Version	Supplied with	Item No.
For 2 doors	With clip-in door stopper	4 running gears 4 door stoppers with clip-in door stopper 1 door follower 2 service ports 2 guides 1 mounting aid	402.33.018
	With soft closing mechanism on one side	4 running gears (2 with soft closing mechanism) 4 door stoppers (2 with clip-in door stopper, 2 for soft closing mechanism) 1 door follower 2 guides 1 mounting aid	402.33.019
	With soft closing mechanism on both sides	4 running gears with soft closing mechanism 4 door stoppers for soft closing mechanism 1 door follower 2 guides 1 mounting aid	402.33.020

Supplied With
1 set

Note
Please order running and guide tracks separately. The pitch length of the running gears must be min. 245 mm (9 5/8") with soft closing mechanism on one side and min. 425 mm (16 3/4") with soft closing mechanism on both sides. Service port cannot be used in combination with running gear with soft closing mechanism.

→ Tracks and Accessories

Description		Min. cabinet top thickness	Material	Finish	Length	Item No.
Single upper running track, for glue mounting into 16 mm (5/8") groove or for screw mounting with 3.0 mm flat head screws		19 (3/4") (gluing)	Aluminum	mill	2.5 m (8' 2 7/16")	402.33.642
		30 (1 3/16") (screw mount)			3.5 m (11' 5 13/16")	402.33.643
Double upper running track, for glue mounting into 16 mm (5/8") groove or for screw mounting with 3.0 mm flat head screws		19 (3/4") (gluing)	Aluminum	mill	2.5 m (8' 2 7/16")	402.33.652
		30 (1 3/16") (screw mount)				
Single upper running track, for screw mounting		–	Aluminum	silver colored anodized	2.5 m (8' 2 7/16")	402.30.642
Double upper running track, for screw mounting		–	Aluminum	silver colored anodized	2.5 m (8' 2 7/16")	402.30.652
Lower guide channel, for glue mounting into 6 mm (1/4") groove		–	Plastic	gray	2.5 m (8' 2 7/16")	402.30.802
					3.5 m (11' 5 13/16")	402.30.803
Flat head screw 3.0 x 1/2", Phillips drive, for screw mounted upper running tracks		–	Steel	zinc-plated	12 mm (1/2")	402.33.010

Note
Polyurethane glue recommended for groove mounted tracks.

Flat head screws pages 12.7–12.8, 12.10, 12.13

Dimensional data not binding. Dimensions in mm, inches are approximate. We reserve the right to alter specifications without notice.

Häfele Slido F-Line21 40C

- > Door weight: max. 40 kg (88 lbs.); min. 21 kg (46 lbs.)
- > Door height: max. 2200 mm (7' 2 5/8")
- > Door width: max. 1250 mm (4' 1 3/16")
- > Door thickness: 16–19 mm (5/8"–3/4")
- > Door width: >370 mm (14 9/16") with soft closing mechanism on one side, >550 mm (21 5/8") with soft closing mechanism on both sides
- > Height adjustment: +/- 2 mm (1/16") on running gear using adjusting wheel
- > Mounts quickly and easily
- > Space saving compared to hinged doors
- > Optional soft closing mechanism

soft&silent

Drilling pattern

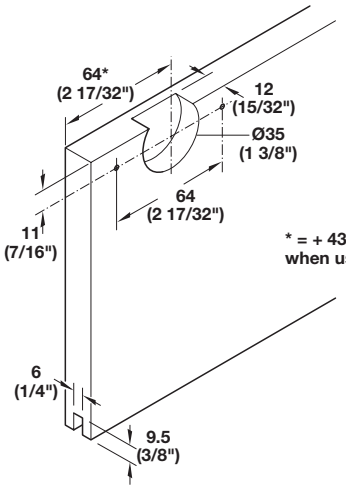

Door overlap

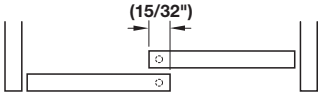

*** = + 43 (1 11/16") when using service port**

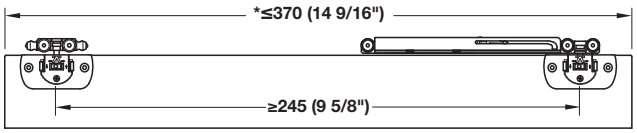

Minimum door width with one soft closing mechanism.
* Add 43 mm (1 3/16") when using service port.

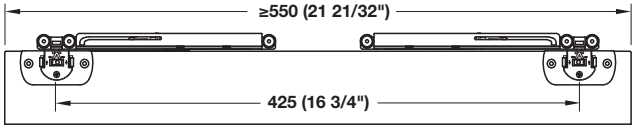

Minimum door width with two soft closing mechanisms.

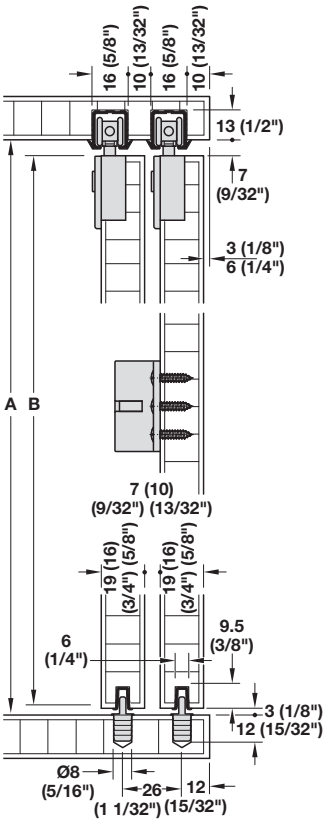

Groove mounted track

A = internal cabinet height
B = internal cabinet height minus 10 mm (13/32")

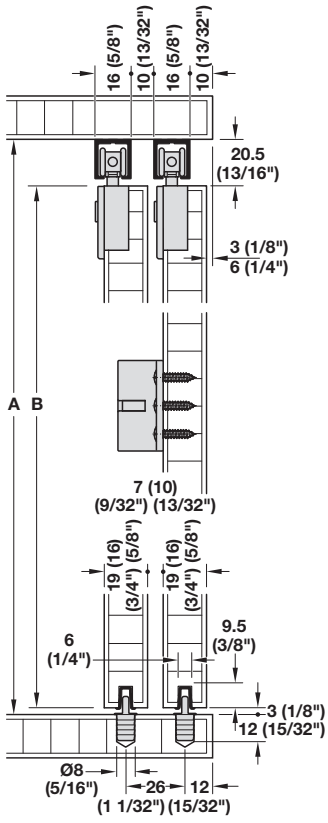

Screw mounted track

A = internal cabinet height
B = internal cabinet height minus 23.5 mm (15/16")

Door panel installation

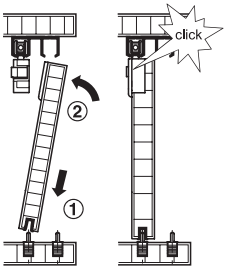

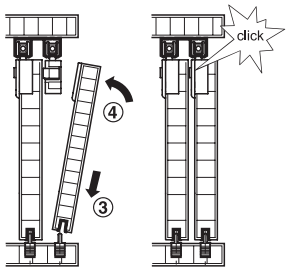

Dimensional data not binding. Dimensions in mm, inches are approximate. We reserve the right to alter specifications without notice.

→ Häfele Slido F-Line21 40C Set

	Version	Supplied with	Item No.
For 2 doors	With clip-in door stopper	4 running gears 4 door stoppers with clip-in door stopper 1 door follower 2 service ports 2 guides 1 mounting aid	402.33.026
	With soft closing mechanism on one side, 40 kg (88 lbs.)	4 running gears (2 with soft closing mechanism) 4 door stoppers (2 with clip-in door stopper, 2 for soft closing mechanism) 1 door follower 2 guides 1 mounting aid	402.33.027
	With soft closing mechanism on both sides, 40 kg (88 lbs.)	4 running gears with soft closing mechanism 4 door stoppers for soft closing mechanism 1 door follower 2 guides 1 mounting aid	402.33.028

Supplied With
1 set

Note
Please order running and guide tracks separately. The pitch length of the running gears must be min. 245 mm (9 5/8") with soft closing mechanism on one side and min. 425 mm (16 3/4") with soft closing mechanism on both sides. Service port cannot be used in combination with running gear with soft closing mechanism.

→ Tracks and Accessories

Description		Min. cabinet top thickness	Material	Finish	Length	Item No.
Single upper running track, for glue mounting into 16 mm (5/8") groove or for screw mounting with 3.0 mm flat head screws		19 (3/4") (gluing)	Aluminum	mill	2.5 m (8' 2 7/16")	402.33.642
		30 (1 3/16") (screw mount)			3.5 m (11' 5 13/16")	402.33.643
Double upper running track, for glue mounting into 16 mm (5/8") groove or for screw mounting with 3.0 mm flat head screws		19 (3/4") (gluing)	Aluminum	mill	2.5 m (8' 2 7/16")	402.33.652
		30 (1 3/16") (screw mount)				
Single upper running track, for screw mounting		–	Aluminum	silver colored anodized	2.5 m (8' 2 7/16")	402.30.642
Double upper running track, for screw mounting		–	Aluminum	silver colored anodized	2.5 m (8' 2 7/16")	402.30.652
Lower guide channel, for glue mounting into 6 mm (1/4") groove		–	Plastic	gray	2.5 m (8' 2 7/16")	402.30.802
					3.5 m (11' 5 13/16")	402.30.803
Flat head screw 3.0 x 1/2", Phillips drive, for screw mounted upper running tracks		–	Steel	zinc-plated	12 mm (1/2")	402.33.010

Note
Polyurethane glue recommended for groove mounted tracks.

Flat head screws	pages 12.7–12.8, 12.10, 12.13
Planofit Straightening Fitting	page 7.91

Dimensional data not binding. Dimensions in mm, inches are approximate. We reserve the right to alter specifications without notice.

Häfele Slido F-Line21 20A

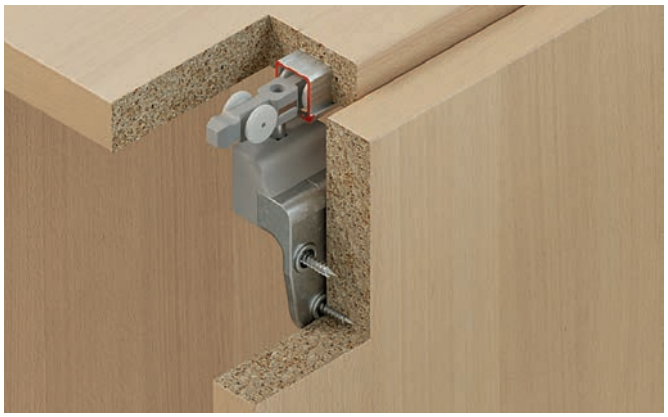

- > Door weight: max. 20 kg (44 lbs.)
- > Door height: max. 1,400 mm (4' 7 1/8")
- > Door width: max. 1,250 mm (4' 1 3/16")
- > Door thickness: 16–19 mm (5/8"–3/4")
- > Height adjustment: ±2 mm (1/16") on running gear using adjusting wheel
- > Mounts quickly and easily
- > Space saving compared to hinged doors
- > Optional soft closing mechanism

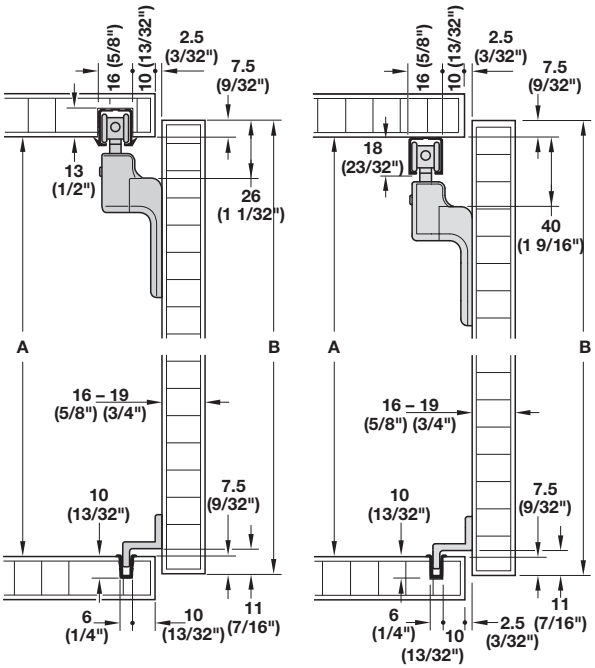

Groove mounted track
A = internal cabinet height
B = internal cabinet height plus 15 mm (19/32")

Screw mounted track
A = internal cabinet height
B = internal cabinet height plus 15 mm (19/32")

Drilling pattern

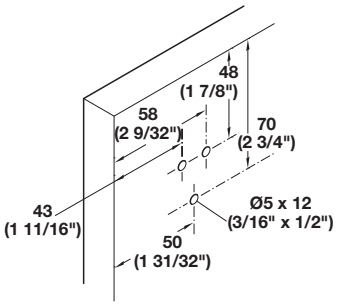

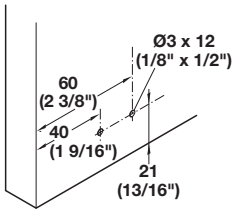

Note
The dimensions 48 / 70 mm (1 7/8" / 2 3/4") are increased by 14 mm (9/16") when using screw mounted tracks.

Dimensions are from the edge of the door and will need to be adjusted for overlays.

The dimensions 43 / 58 mm (1 11/16" / 2 9/32") are increased by 43 mm (1 11/16") when using a service port.

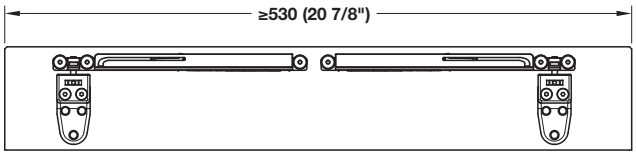

Minimum door width with two soft closing mechanisms.

Door installation

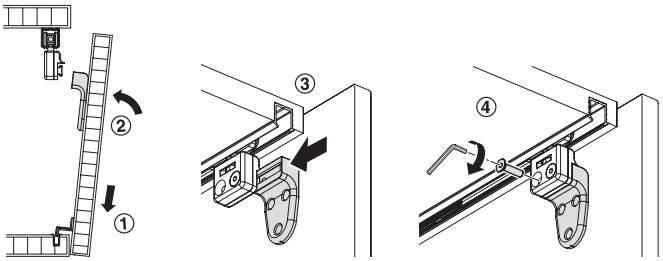

Dimensional data not binding. Dimensions in mm, inches are approximate. We reserve the right to alter specifications without notice.

→ Häfele Slido F-Line21 20A Set

	Version	Supplied with	Item No.
For 1 door	With clip-in door stopper	2 running gears 2 door stoppers with clip-in door stopper 2 guides 1 service port 1 mounting aid	402.33.029
	With soft closing mechanism on both sides	2 running gears with soft closing mechanism 2 door stoppers for soft closing mechanism 2 guides 1 mounting aid	402.33.031

Supplied With
1 set

Note
Please order running and guide tracks separately. The pitch length of the running gears must be min. 425 mm (16 3/4") with soft closing mechanism on both sides.

→ Tracks and Accessories

Description		Min. cabinet top thickness	Material	Finish	Length	Item No.
Single upper running track, for glue mounting into 16 mm (5/8") groove or for screw mounting with 3.0 mm flat head screws		19 (3/4") (gluing)	Aluminum	mill	2.5 m (8' 2 7/16")	402.33.642
		30 (1 3/16") (screw mount)			3.5 m (11' 5 13/16")	402.33.643
Single upper running track, for screw mounting		19 (3/4")	Aluminum	silver colored anodized	2.5 m (8' 2 7/16")	402.30.642
					3.5 m (11' 5 13/16")	402.30.643
Lower guide channel, for glue mounting into 6 mm (1/4") groove		–	Plastic	gray	2.5 m (8' 2 7/16")	402.30.802
					3.5 m (11' 5 13/16")	402.30.803
Flat head screw 3.0 x 1/2", Phillips drive for screw mounted upper running tracks		–	Steel	zinc-plated	12 mm (1/2")	402.33.010

Note
Polyurethane glue recommended for groove mounted tracks.

Dimensional data not binding. Dimensions in mm, inches are approximate. We reserve the right to alter specifications without notice.

HAWA Clipo 16 H IF

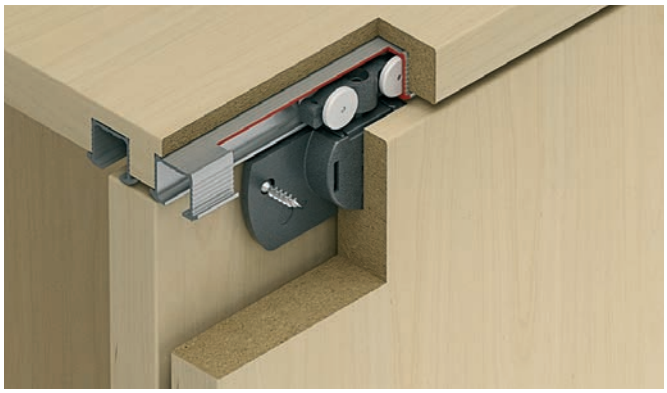

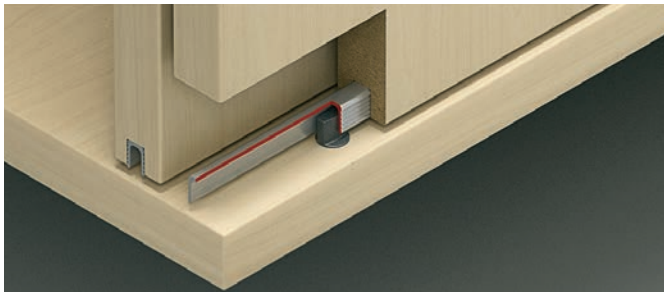

- > Door weight: max. 16 kg (35 lbs.)
- > Door height: max. 1,400 mm (55 1/8")
- > Door width: max. 1,000 mm (39 3/8")
- > Door thickness: 16–19 mm (5/8"–3/4")
- > Height adjustment: +2/-1 mm (+1/16"/-1/32")
- > Running gears with clip-mounting, plastic rollers with metal axles
- > Quick door mounting
- > No guide rails in the cabinet bottom
- > A wood cover panel is not needed
- > Optional soft closing mechanism

Soft close mounting

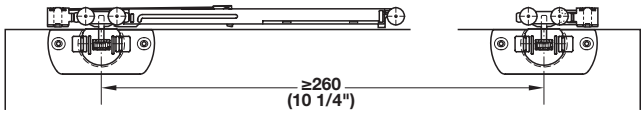

Door with one soft closing mechanism

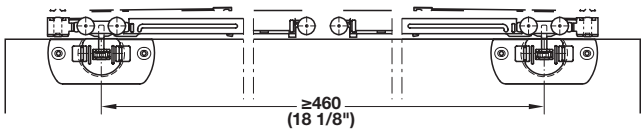

Door with two soft closing mechanisms

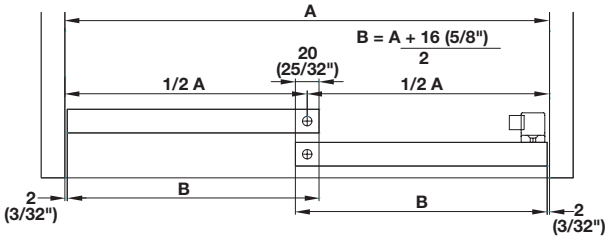

Drilling pattern

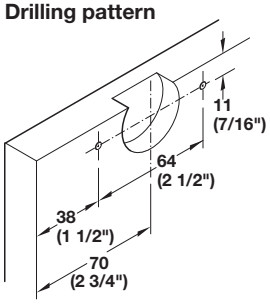

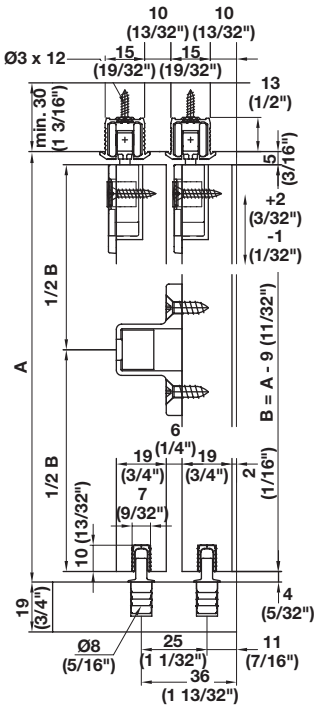

Mounting example with 19 mm (3/4") door and track 405.87.082.

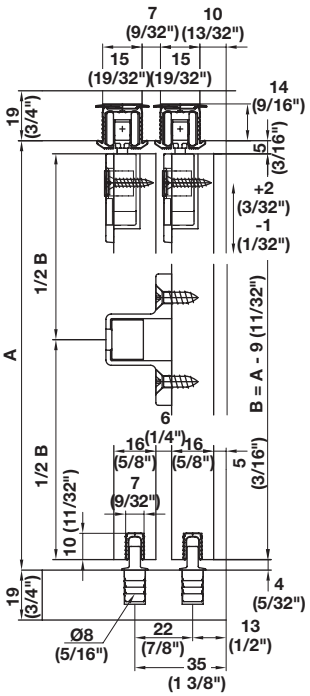

Mounting example with 16 mm (5/8") door and track 405.87.092.

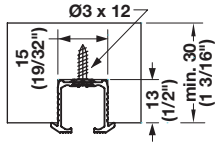

Upper track, screw mounted

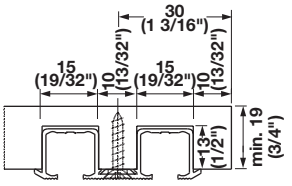

Double upper track, screw mounted

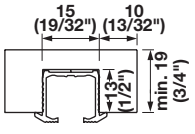

Upper track, for gluing into groove

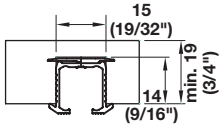

Upper track, with rotating fasteners

Dimensional data not binding. Dimensions in mm, inches are approximate. We reserve the right to alter specifications without notice.

→ HAWA Clipo 16 H IF Set

	Version	Supplied with	Item No.
For 2 doors	With clip-in door stopper	4 running gears with housings 1 door follower 2 door stoppers with clip-in door stopper 2 floor guides	405.82.216

Supplied With
1 set

Note
Please order running and guide tracks separately. Soft closing mechanism on one side is possible from pitch length of min. 260 mm (10 1/4"), both sides from 460 mm (18 1/8"). Please order soft closing mechanism set for soft closing on both sides separately.

→ Tracks and Accessories

Description		Min. cabinet top thickness	Material	Finish	Length/Door weight	Item No.
Upper track, for gluing into groove (polyurethane glue recommended)	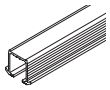	19 (3/4")	Aluminum	bright	2.5 m (8' 2 7/16")	405.87.042
					3.5 m (11' 5 13/16")	405.87.043
Upper track, with rotating fasteners (not suitable for hard wood)	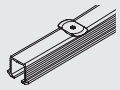	19 (3/4")	Aluminum	bright	2.5 m (8' 2 7/16")	405.87.092
					3.5 m (11' 5 13/16")	405.87.093
Upper track, pre-drilled, for screw mounting	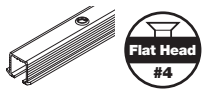	30 (1 3/16")	Aluminum	bright	2.5 m (8' 2 7/16")	405.87.082
					3.5 m (11' 5 13/16")	405.87.083
Double upper track, pre-drilled, for screw mounting	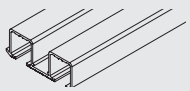	19 (3/4")	Aluminum	bright	2.5 m (8' 2 7/16")	405.90.032
					3.5 m (11' 5 13/16")	405.90.033
Lower guide channel, with harpoon ribs	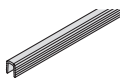	–	Plastic	anthracite	2.5 m (8' 2 7/16")	405.98.517
Soft closing mechanism, optional for screw mounting to housing One set includes two mechanisms. Two sets are required for dual soft closing of two doors.	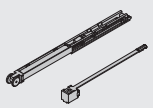	–	Plastic	gray	<8 kg (17.6 lbs.)	405.10.077
					8 kg–16 kg (17.6–35 lbs.)	405.10.075
Service port, for upper track with rotating fasteners (access running gear after installation)		–	Plastic	gray	–	405.83.180
Service port, for upper track for screw mounting (access running gear after installation)		–	Plastic	gray	–	405.83.181

Flat head screws pages 12.7–12.8, 12.10, 12.13

Dimensional data not binding. Dimensions in mm, inches are approximate. We reserve the right to alter specifications without notice.

HAWA Clipo 26 H IF

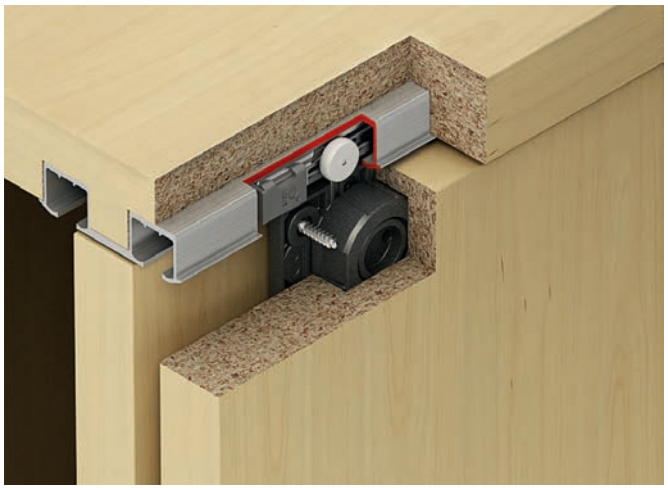

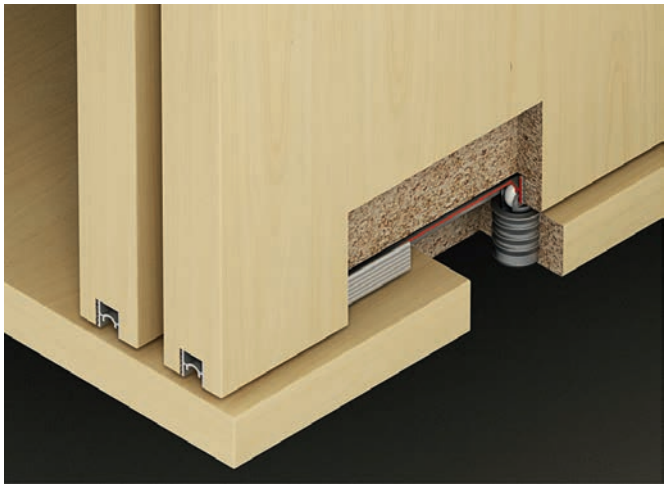

- > Door height: max. 2,200 mm (7' 2 5/8")
- > Door weight: max. 26 kg (57 lbs.)
- > Door width: max. 1,000 mm (3' 3 3/8")
- > Door thickness: 19–25 mm (3/4"–1")
- > Height adjustment: +/-2 mm (3/32")
- > Running gear with two plastic rollers
- > Rattle-free floor guide
- > No guide rails in the bottom of the cabinet
- > Clip-on hardware allows for quick and easy door mounting
- > Optional soft closing mechanism

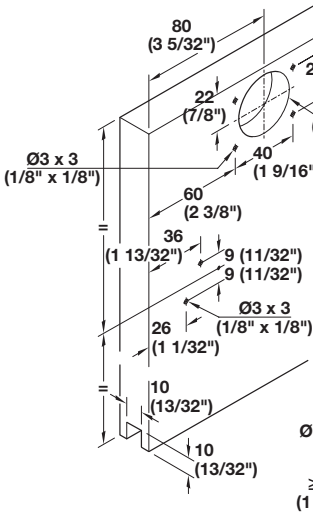

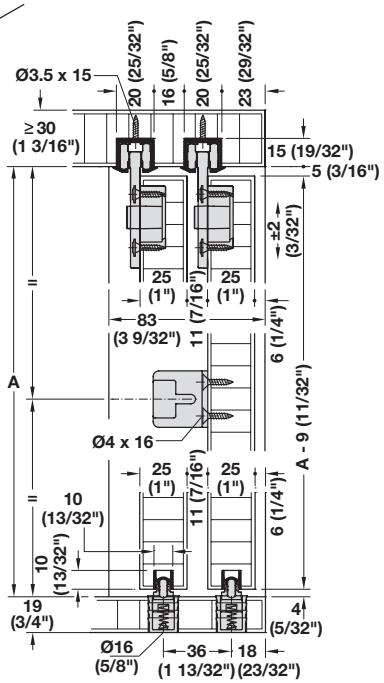

Soft close mounting

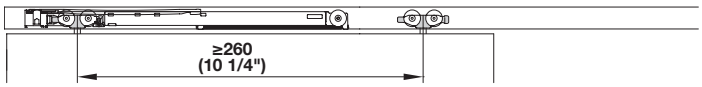

Door with one soft closing mechanism.

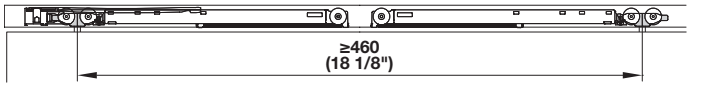

Door with two soft closing mechanisms.

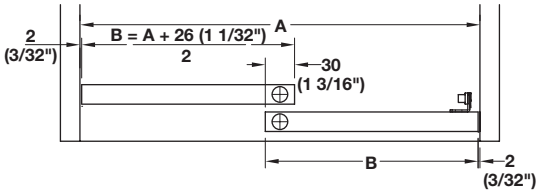

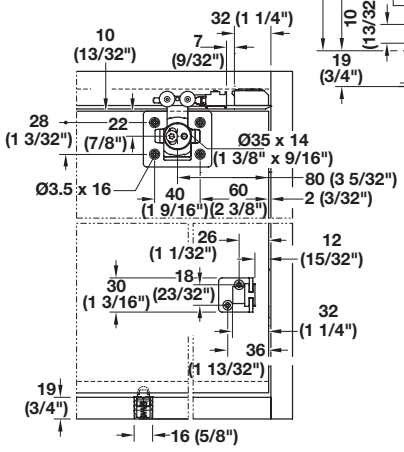

Dimensional data not binding. Dimensions in mm, inches are approximate. We reserve the right to alter specifications without notice.

→ HAWA Clipo 26 H IF Set

	Supplied with	Item No.
For 2 doors	4 running gears with housings 1 door follower 2 guides 4 door stoppers with clip-in door stopper Mounting material	405.00.004

Supplied With
1 set

Note
Please order running and guide tracks separately. Soft closing mechanism on one side is possible from pitch length of min. 260 mm (10 1/4"), both sides from 460 mm (18 1/8"). Please order soft closing mechanism set for soft closing on both sides separately.

→ Tracks and Accessories

Description		Material	Finish	Length/Door weight	Item No.
Upper track, pre-drilled, for screw mounting	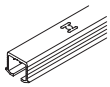	Aluminum	anodized silver	2.5 m (8' 2 7/16")	405.00.622
				3.5 m (11' 5 13/16")	405.00.623
Lower guide channel	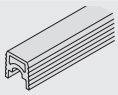	Plastic	gray	2.5 m (8' 2 7/16")	406.73.803
				3.5 m (11' 5 13/16")	406.73.804
Soft closing mechanism, optional, for screw mounting to housing One set includes two mechanisms. Two sets are required for dual soft closing of two doors.		Plastic	gray	up to 15 kg (33 lbs.)	405.10.073
				15.4–26 kg (34–57 lbs.)	405.10.074
Service port for upper track (access running gear after installation)	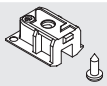	Plastic	gray	–	405.00.072

Dimensional data not binding. Dimensions in mm, inches are approximate. We reserve the right to alter specifications without notice.

HAWA Clipo 36 H IF

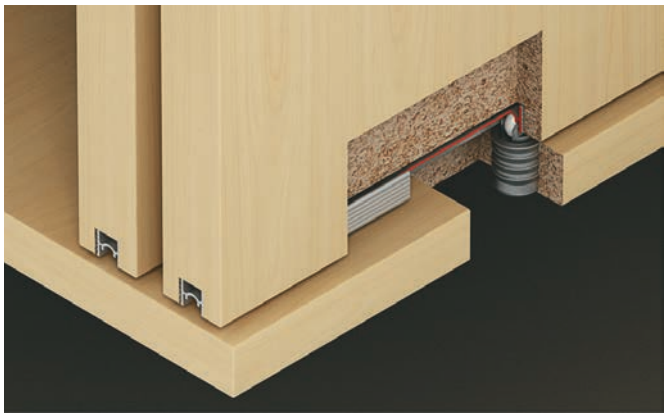

- > Door weight: max. 36 kg (79 lbs.)
- > Door height: max. 2,200 mm (7' 2 5/8")
- > Door width: max. 1,000 mm (3' 3 3/8")
- > Door thickness: 19–25 mm (3/4"–1")
- > Height adjustment: +/-2 mm (3/32")
- > Running gear with four plastic rollers
- > Rattle-free floor guide
- > No guide rails in the bottom of the cabinet
- > Clip-on hardware allows for quick and easy door mounting
- > Optional soft closing mechanism

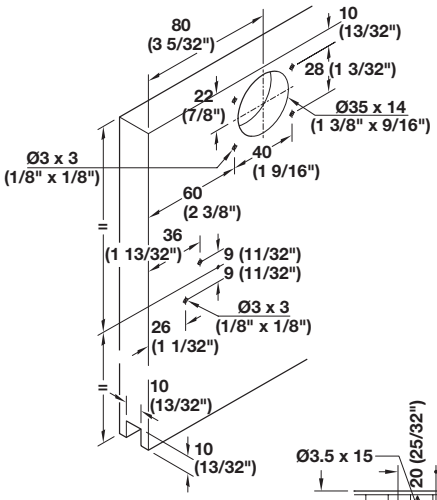

Soft close mounting

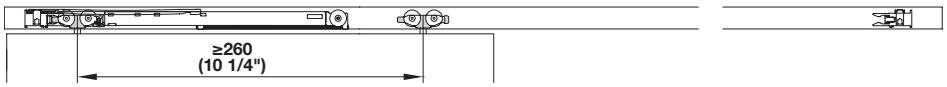

Door with one soft closing mechanism.

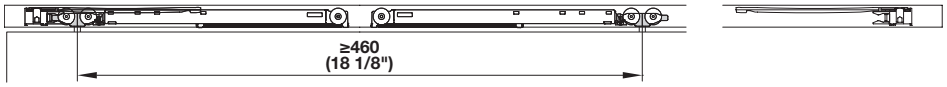

Door with two soft closing mechanisms.

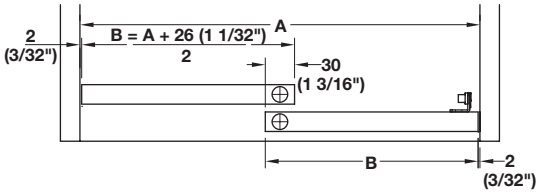

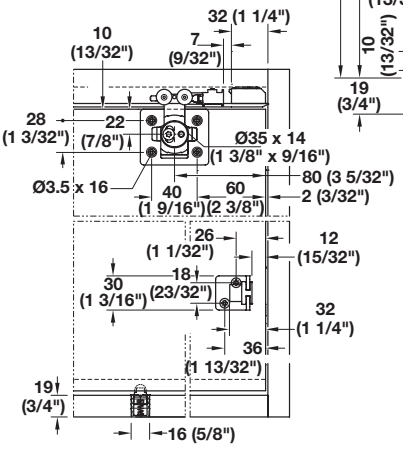

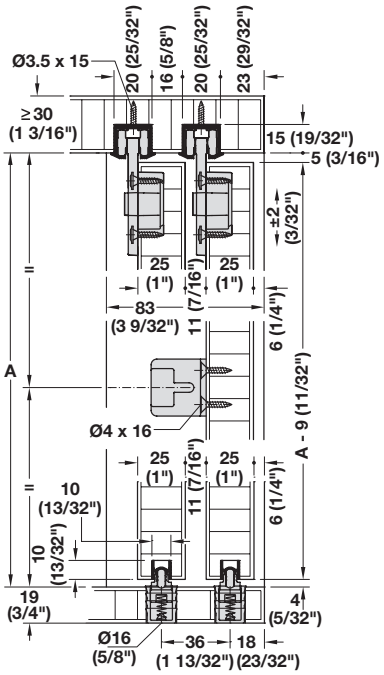

Dimensional data not binding. Dimensions in mm, inches are approximate. We reserve the right to alter specifications without notice.

→ HAWA Clipo 36 H IF Set

	Supplied with	Item No.
For 2 doors	4 running gears with housings 1 door follower 2 guides 4 door stoppers with clip-in door stopper Mounting material	405.02.404
For 3 doors	6 running gears with housings 3 guides 4 door stoppers with clip-in door stopper 2 buffers Mounting material	405.02.405

Supplied With
1 set

Note
Please order running and guide tracks separately. Soft closing mechanism on one side is possible from pitch length of min. 260 mm (10 1/4"), both sides from 460 mm (18 1/8"). Please order soft closing mechanism set for soft closing on both sides separately.

→ Tracks and Accessories

Description		Material	Finish	Length/Door weight	Item No.
Upper track, pre-drilled, for screw mounting	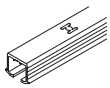	Aluminum	anodized silver	2.5 m (8' 2 7/16")	405.00.622
				3.5 m (11' 5 13/16")	405.00.623
Lower guide channel	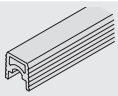	Plastic	gray	2.5 m (8' 2 7/16")	406.73.803
				3.5 m (11' 5 13/16")	406.73.804
Soft closing mechanism, optional for screw mounting to housing One set includes two mechanisms. Two sets are required for dual soft closing of two doors.		Plastic	gray	up to 26 kg (57 lbs.)	405.10.074
				26–36 kg (57–79 lbs.)	940.48.045
Service port for upper track (access running gear after installation)	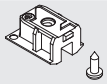	Plastic	gray	–	405.00.072

Planofit door straightening page 7.91

Dimensional data not binding. Dimensions in mm, inches are approximate. We reserve the right to alter specifications without notice.

HAWA Clipo 16 H MF

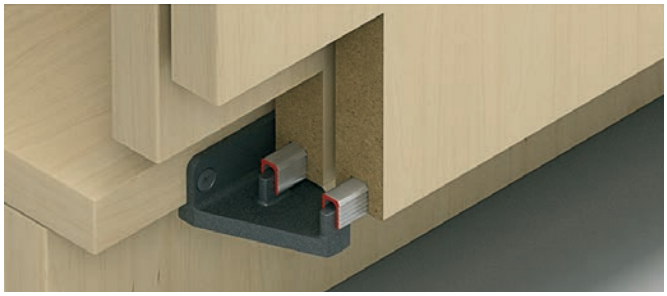

- > Door weight: max. 16 kg (35 lbs.)
- > Door height: max. 1,400 mm (55 1/8")
- > Door width: max. 1,000 mm (39 3/8")
- > Door thickness: 16–19 mm (5/8"–3/4")
- > Height adjustment: +2/-1 mm (+3/32"/-1/32")
- > Running gears with clip-mounting, plastic rollers with metal axles
- > Quick door mounting
- > No guide rails in the cabinet bottom
- > A wood cover panel is not needed
- > Optional soft closing mechanism

Soft close mounting

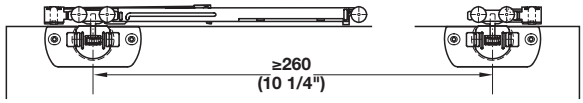

Door with one soft closing mechanism.

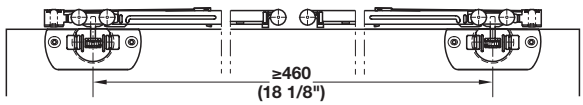

Door with two soft closing mechanisms.

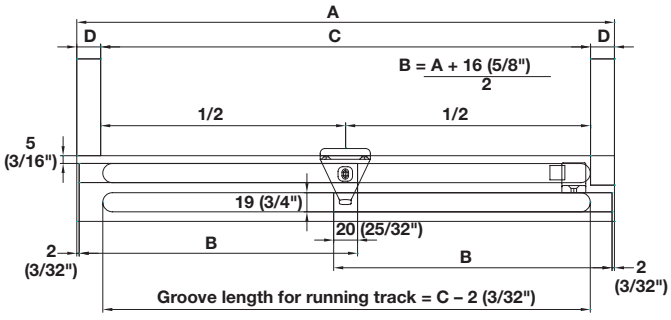

Drilling pattern

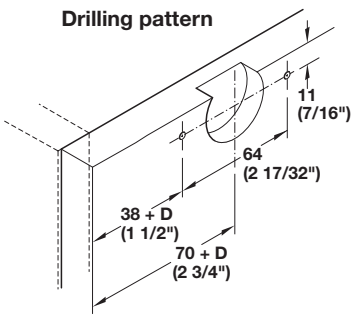

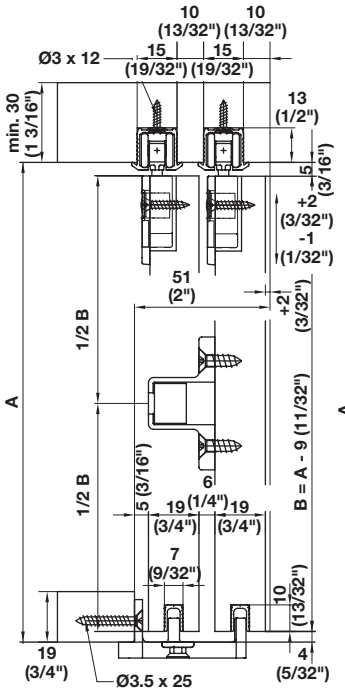

Mounting example with 19 mm (3/4") door and track 405.87.082.

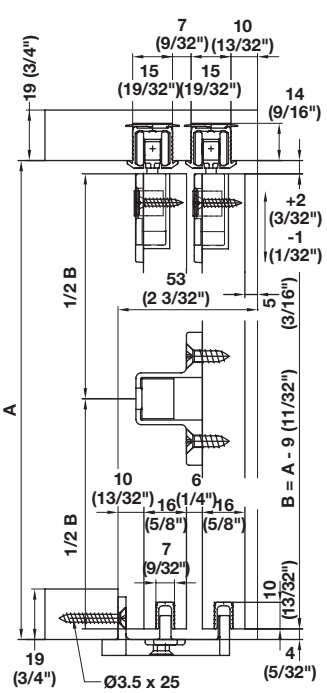

Mounting example with 16 mm (5/8") door and track 405.87.092.

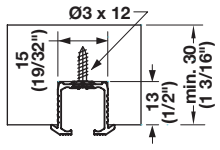

Upper track, screw mounted

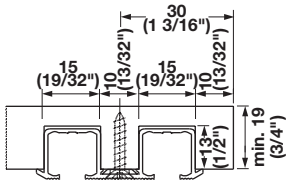

Double upper track, screw mounted

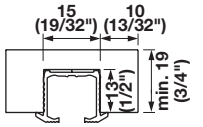

Upper track, for gluing into groove

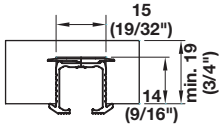

Upper track, with rotating fasteners

Dimensional data not binding. Dimensions in mm, inches are approximate. We reserve the right to alter specifications without notice.

→ HAWA Clipo 16 H MF Set

	Version	Supplied with	Item No.
For 2 doors	With clip-in door stopper	4 running gears with housings 1 door follower 2 door stoppers with clip-in door stopper 1 guide Mounting material	405.82.118

Supplied With
1 set

Note
Please order running and guide tracks separately. Soft closing mechanism on one side is possible from pitch length of min. 260 mm (10 1/4"), both sides from 460 mm (18 1/8"). Please order soft closing mechanism set for soft closing on both sides separately.

→ Tracks and Accessories

Description		Min. cabinet top thickness	Material	Finish	Length/Door weight	Item No.
Upper track, for gluing into groove (polyurethane glue recommended)	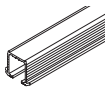	19 (3/4")	Aluminum	mill	2.5 m (8' 2 7/16")	405.87.042
					3.5 m (11' 5 13/16")	405.87.043
Upper track, with rotating fasteners (not suitable for hard wood)	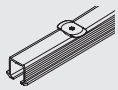	19 (3/4")	Aluminum	mill	2.5 m (8' 2 7/16")	405.87.092
					3.5 m (11' 5 13/16")	405.87.093
Upper track, pre-drilled, for screw mounting	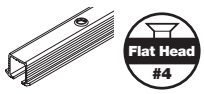	30 (1 3/16")	Aluminum	mill	2.5 m (8' 2 7/16")	405.87.082
					3.5 m (11' 5 13/16")	405.87.083
Double upper track, pre-drilled, for screw mounting	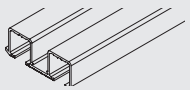	19 (3/4")	Aluminum	mill	2.5 m (8' 2 7/16")	405.90.032
					3.5 m (11' 5 13/16")	405.90.033
Lower guide channel, with harpoon ribs	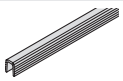	–	Plastic	anthracite	2.5 m (8' 2 7/16")	405.98.517
Soft closing mechanism, optional for screw mounting to housing	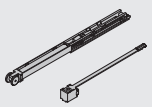	–	Plastic	gray	<8 kg (17.6 lbs.)	405.10.077
One set includes two mechanisms. Two sets are required for dual soft closing of two doors.		–	Plastic	–	8–16 kg (17.6–35 lbs.)	405.10.075
Service port, for upper track with rotating fasteners (access running gear after installation)		–	Plastic	gray	–	405.83.180
Service port, for upper track for screw mounting (access running gear after installation)		–	Plastic	gray	–	405.83.181

Flat head screws pages 12.7–12.8, 12.10, 12.13

Dimensional data not binding. Dimensions in mm, inches are approximate. We reserve the right to alter specifications without notice.

HAWA Clipo 16 HM IF

- > Door weight: max. 16 kg (35 lbs.)
- > Door height: max. 1,400 mm (55 1/8")
- > Door width: max. 1,000 mm (39 3/8")
- > Door thickness: 19 mm (3/4")
- > Height adjustment: +2/-1 mm (+3/32"/-1/32")
- > Running gears for insertion, plastic rollers with metal axles
- > Quick door mounting
- > No guide rails in the cabinet bottom
- > Optional soft closing mechanism

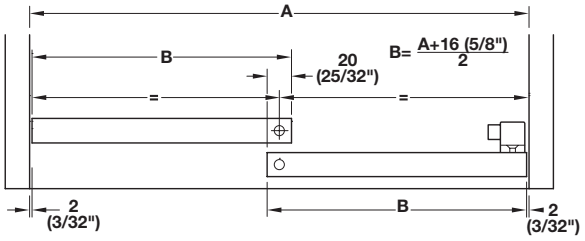

Soft close mounting

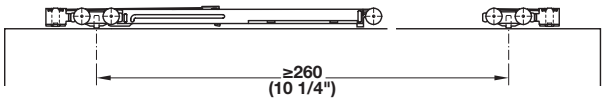

Door with one soft closing mechanism.

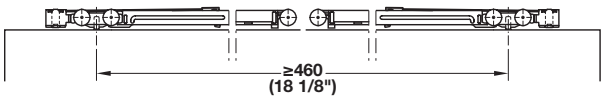

Door with two soft closing mechanisms.

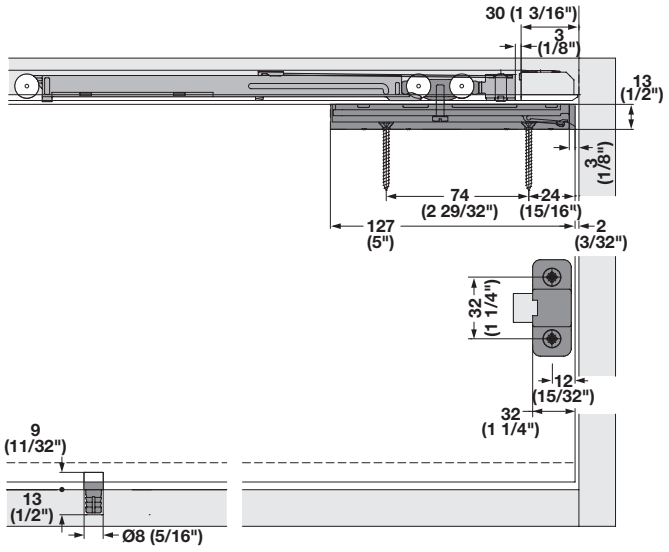

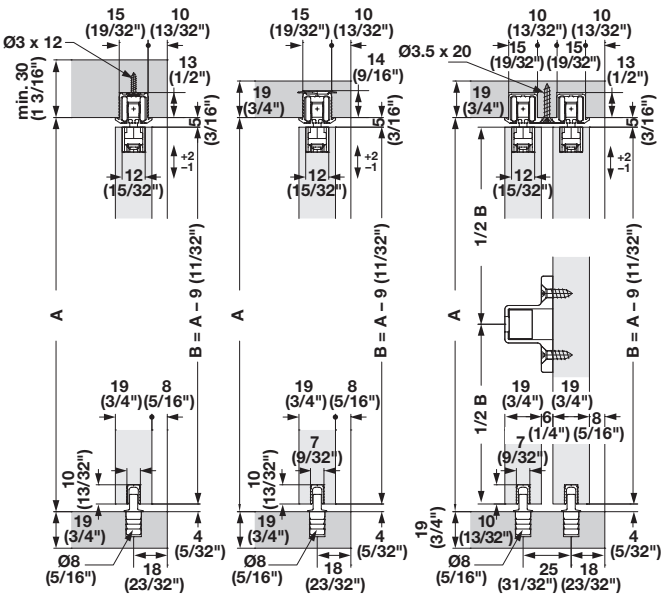

Mounting example with 19 mm (3/4") door and track 405.87.082.

Mounting example with 19 mm (3/4") door and track 405.87.092.

Mounting example with 19 mm (3/4") doors and tracks 405.90.032.

Running gear installation

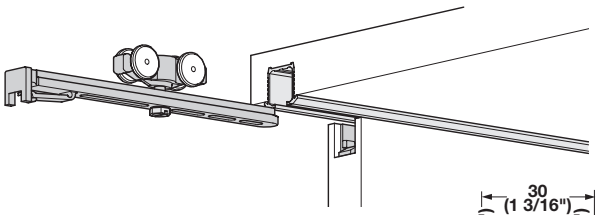

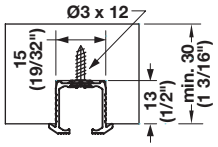

Upper track, screw mounted

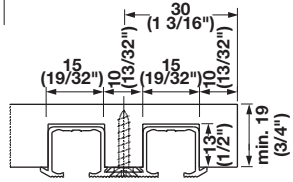

Double upper track, screw mounted

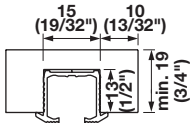

Upper track, for gluing into groove

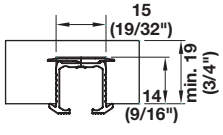

Upper track, with rotating fasteners

Dimensional data not binding. Dimensions in mm, inches are approximate. We reserve the right to alter specifications without notice.

→ HAWA Clipo 16 HM IF Set

	Version	Supplied with	Item No.
For 1 door	With clip-in door stopper	2 running gears with housings 2 door stoppers with clip-in door stopper 1 floor guide	405.82.220

Supplied With
1 set

Note
Please order running and guide tracks separately. Soft closing mechanism on one side is possible from pitch length of min. 260 mm (10 1/4"), both sides from 460 mm (18 1/8"). Please order soft closing mechanism set for soft closing on both sides separately.

→ Tracks and Accessories

Description		Min. cabinet top thickness	Material	Finish	Length/Door weight	Item No.
Upper track, for gluing into groove (polyurethane glue recommended)	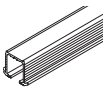	19 (3/4")	Aluminum	mill	2.5 m (8' 2 7/16")	405.87.042
					3.5 m (11' 5 13/16")	405.87.043
Upper track, with rotating fasteners (not suitable for hard wood)	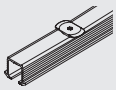	19 (3/4")	Aluminum	mill	2.5 m (8' 2 7/16")	405.87.092
					3.5 m (11' 5 13/16")	405.87.093
Upper track, pre-drilled, for screw mounting	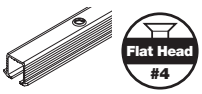	30 (1 3/16")	Aluminum	mill	2.5 m (8' 2 7/16")	405.87.082
					3.5 m (11' 5 13/16")	405.87.083
Double upper track, pre-drilled, for screw mounting	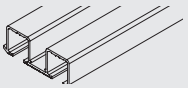	19 (3/4")	Aluminum	mill	2.5 m (8' 2 7/16")	405.90.032
					3.5 m (11' 5 13/16")	405.90.033
Lower guide channel, with harpoon ribs	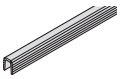	–	Plastic	anthracite	2.5 m (8' 2 7/16")	405.98.517
Soft closing mechanism, optional for screw mounting to housing	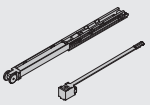	–	Plastic	–	<8 kg (17.6 lbs.)	405.10.077
One set includes two mechanisms. Two sets are required for dual soft closing of two doors.		–	Plastic	–	8–16 kg (17.6–35 lbs.)	405.10.075
Service port, for upper track with rotating fasteners (access running gear after installation)		–	Plastic	gray	–	405.83.180
Service port, for upper track for screw mounting (access running gear after installation)		–	Plastic	gray	–	405.83.181

Flat head screws pages 12.7–12.8, 12.10, 12.13

Dimensional data not binding. Dimensions in mm, inches are approximate. We reserve the right to alter specifications without notice.

HAWA Clipo 36 HM IF

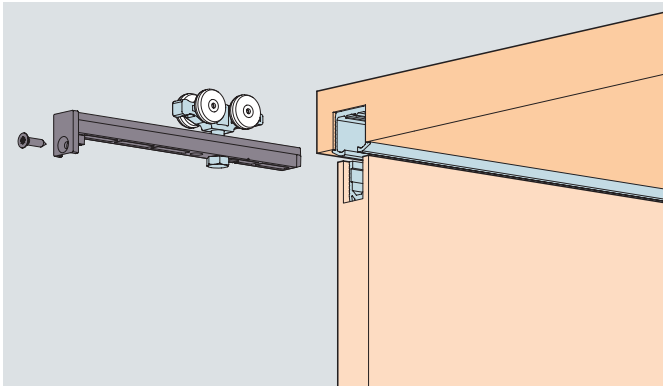

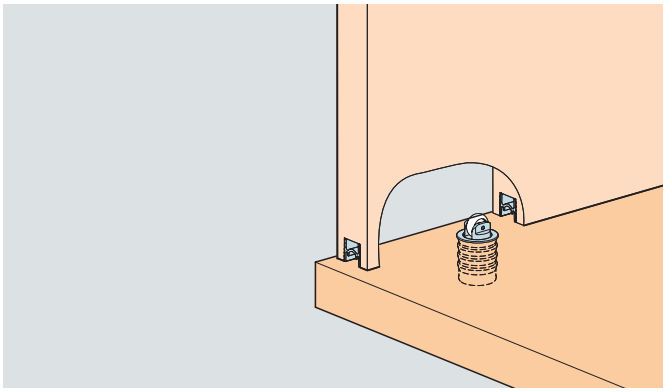

- > Door weight: max. 36 kg (79 lbs.)
- > Door height: max. 2,400 mm (7' 10 1/2")
- > Door width: max. 1,000 mm (3' 3 3/8")
- > Door thickness: 19–25 mm (3/4"–31/32")
- > Height adjustment: +/-2 mm (3/32")
- > Running gear with four plastic rollers
- > Rattle-free floor guide; no guide rails in the cabinet bottom
- > Slide-on hardware allows for quick and easy door mounting
- > Optional soft closing mechanism

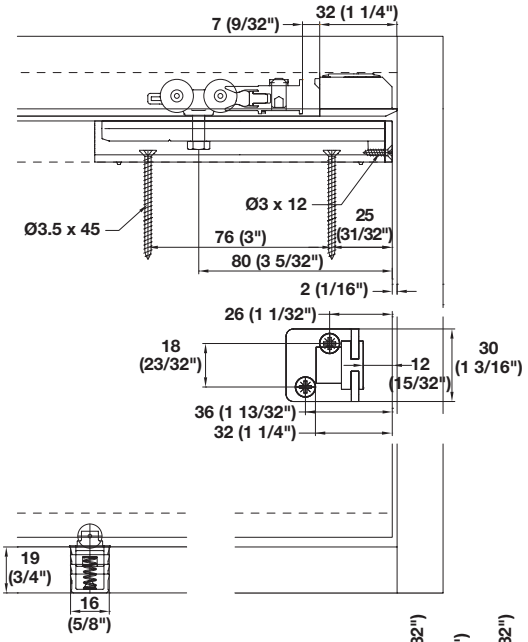

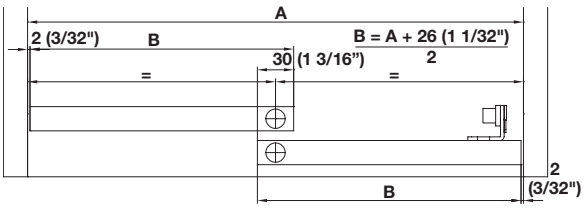

Soft close mounting

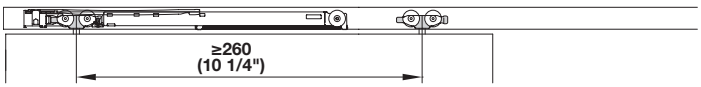

Door with one soft closing mechanism.

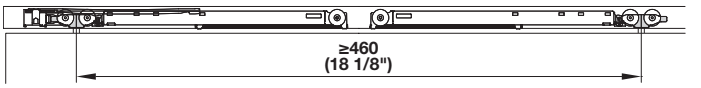

Door with two soft closing mechanisms.

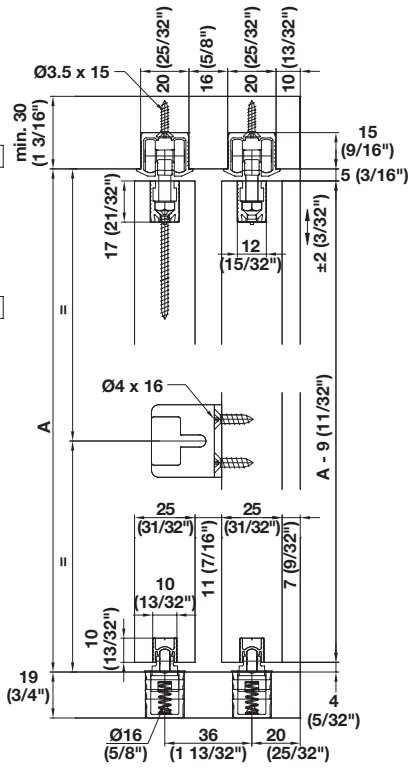

Dimensional data not binding. Dimensions in mm, inches are approximate. We reserve the right to alter specifications without notice.

→ HAWA Clipo 36 HM IF Set

	Version	Supplied with	Item No.
For 1 door	With clip-in door stopper	2 running gears with housings 2 door stoppers 1 floor guide	405.02.408

Supplied With
1 set

Note
Please order running and guide tracks separately. Soft closing mechanism on one side is possible from pitch length of min. 260 mm (10 1/4"), both sides from 460 mm (18 1/8"). Please order soft closing mechanism set for soft closing on both sides separately.

→ Tracks and Accessories

Description		Material	Finish	Length/Door weight	Item No.
Upper track, pre-drilled, for screw mounting	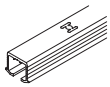	Aluminum	anodized silver	2.5 m (8' 2 7/16")	405.00.622
				3.5 m (11' 5 13/16")	405.00.623
Lower guide channel	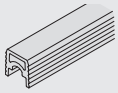	Plastic	gray	2.5 m (8' 2 7/16")	406.73.803
				3.5 m (11' 5 13/16")	406.73.804
Soft closing mechanism, optional for screw mounting to housing One set includes two mechanisms Two sets are required for dual soft closing of two doors		Plastic	–	up to 15 kg (33 lbs.)	405.10.073
				15.4–26 kg (34–57 lbs.)	405.10.074
Service port for upper track (to access running gear after installation)	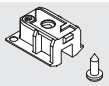	Plastic	gray	–	405.00.072
Soft stop, for screw mounting to the back of the front door Optional for a two door application	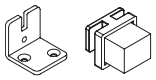	–	–	–	405.93.012

Planofit door straightening page 7.91

Dimensional data not binding. Dimensions in mm, inches are approximate. We reserve the right to alter specifications without notice.

HAWA Combino 20/35 H IF

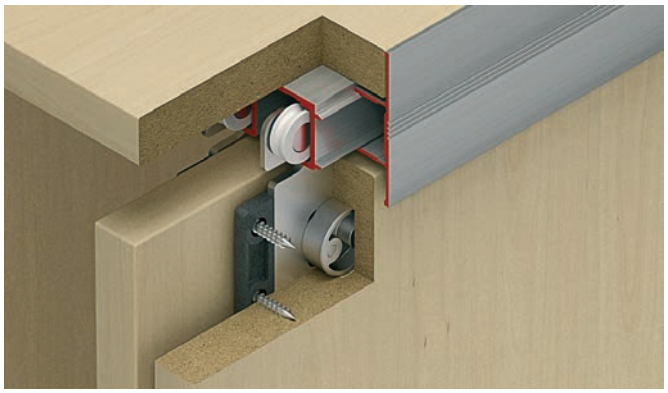

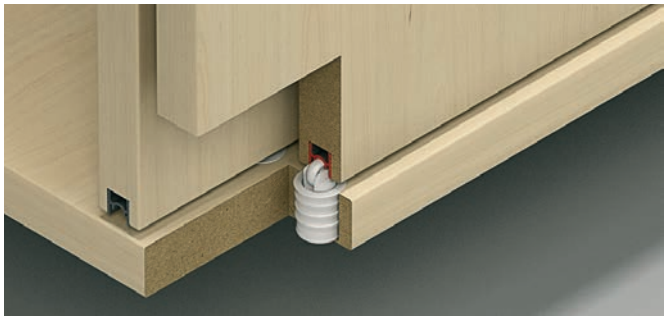

- > Door weight: max. 20/35 kg (44/77 lbs.)
- > Door height: max. 2,200 mm (7' 2 5/8")
- > Door width: max. 1,200 mm (47 1/4")
- > Door thickness: 19 mm (3/4")
- > Recommended door overlay: 30 mm (1 3/16")
- > Eccentric height adjustment: +/- 3 mm (1/8") on running gear
- > Door mounting via spring guide bolt
- > Elegant clip-on aluminum fascia
- > Optional soft closing mechanism

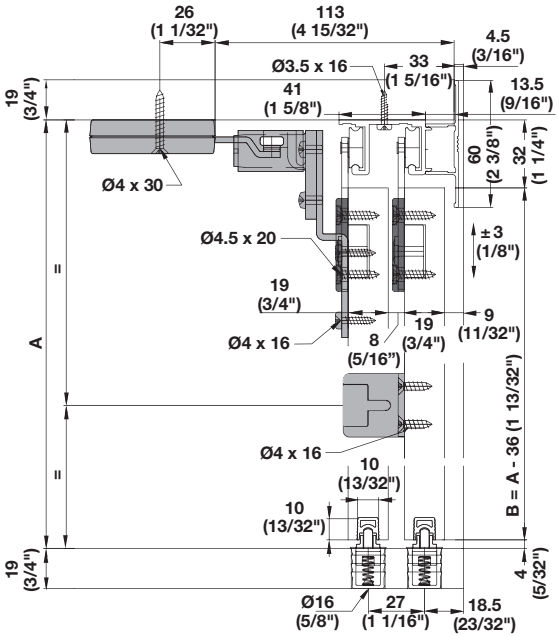

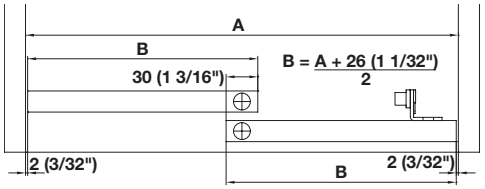

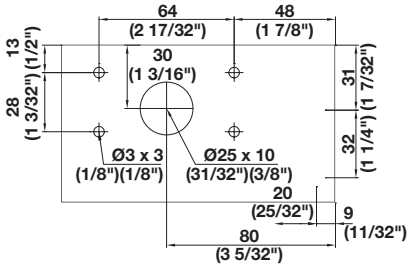

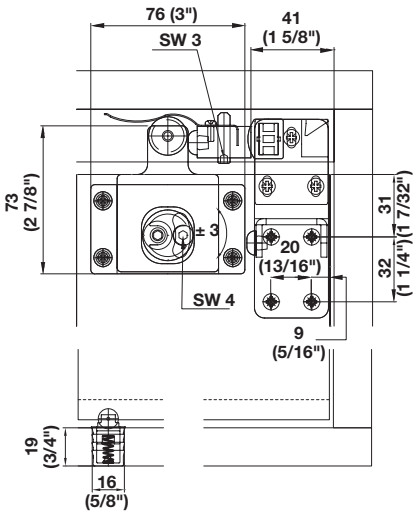

Intermediate stop for 3 doors

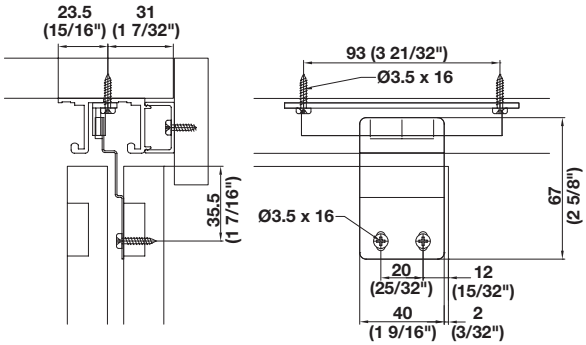

Dimensional data not binding. Dimensions in mm, inches are approximate. We reserve the right to alter specifications without notice.

→ HAWA Combino 20/35 H IF

	Version	Supplied with	Model series	Item No.
For 2 doors	With clip-in door stopper	4 running gears with housings 2 guides 4 door stoppers (2 with clip-in door stopper, 2 stoppers) 1 door follower 1 set of mounting material	Combino 20 H IF	405.91.625
			Combino 35 H IF	405.91.723
For 3 doors		6 running gears 3 guides 4 door stoppers (3 with clip-in door stopper, 1 stopper) 1 buffer set 1 set of mounting material	Combino 35 H IF	405.91.724

Supplied With
1 set

Note
Please order running and guide tracks separately. Soft closing mechanism on one side is possible from pitch length of min. 260 mm (10 1/4"), both sides from 460 mm (18 1/8"). Please order soft closing mechanism set for soft closing on both sides separately.

→ Soft Closing Mechanism Set

	Door weight	Supplied with	Item No.
For 2 doors	For up to 18 kg (39 lbs.)	2 soft closing mechanism units 2 door followers, wide	405.10.003
	For up to 18–40 kg (39–88 lbs.)		405.10.005

Supplied With
1 set

Note
Please order the adapter set for soft closing mechanism. It is required!

→ Tracks and Accessories

Description		Material	Finish	Length	Item No.
Single running track, pre-drilled	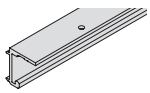	Aluminum	mill	2.5 m (8' 2 7/16")	406.30.967
				3.5 m (11' 5 13/16")	406.30.976
Double running track, pre-drilled	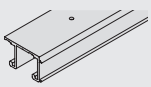	Aluminum	mill	2.5 m (8' 2 7/16")	406.31.964
				3.5 m (11' 5 13/16")	406.31.973
Lower guide channel	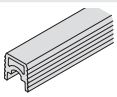	Plastic	gray	2.5 m (8' 2 7/16")	406.73.803
				3.5 m (11' 5 13/16")	406.73.804
Clip-on fascia	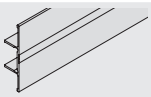	Aluminum	anodized	2.5 m (8' 2 7/16")	406.34.942
				3.5 m (11' 5 13/16")	406.34.943
Clip-on adapter for wood fascia W x H: 40 x 24 (1 9/16" x 15/16")		Aluminum	mill	–	406.35.900
Center door stopper, required only on 3 door application	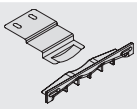	Steel/ Plastic	–	–	406.32.080
Adapter set for soft closing mechanism	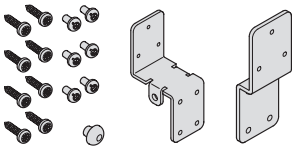	Steel	zinc-plated	–	405.10.092

Planofit door straightening sets page 7.91

Dimensional data not binding. Dimensions in mm, inches are approximate. We reserve the right to alter specifications without notice.

HAWA Combino 65 H IF

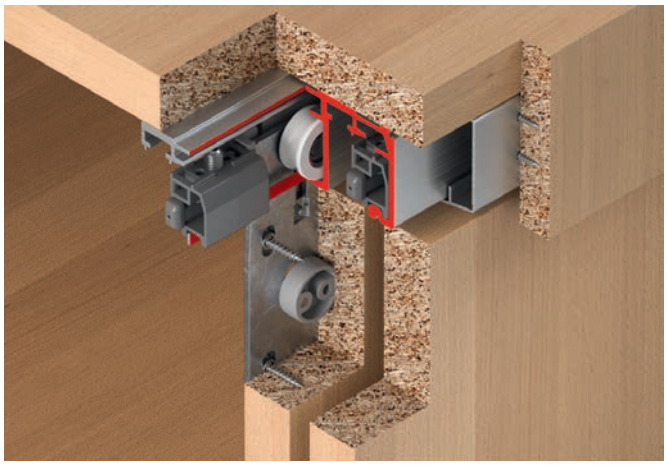

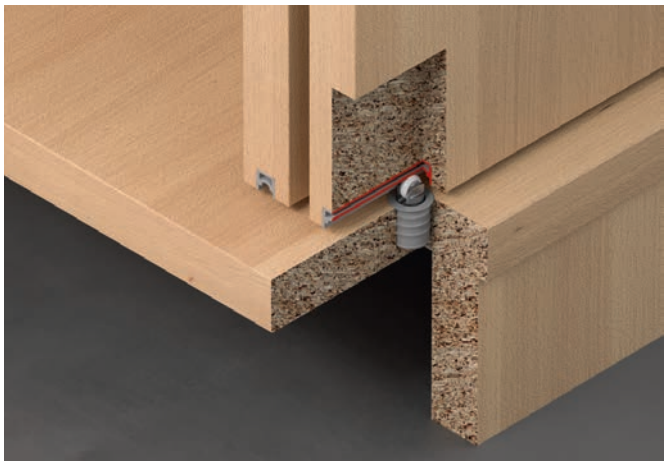

- > Door weight: max. 65 kg (143 lbs.)
- > Door height: max. 2,600 mm (102 3/8")
- > Door width: max. 1,400 mm (55 1/8")
- > Door thickness: 25–40 mm (31/32" x 1 9/16")
- > Height adjustment: +4 / -2 mm (+5/32" / -3/32")
- > Optional soft closing mechanism

Installation dimensions

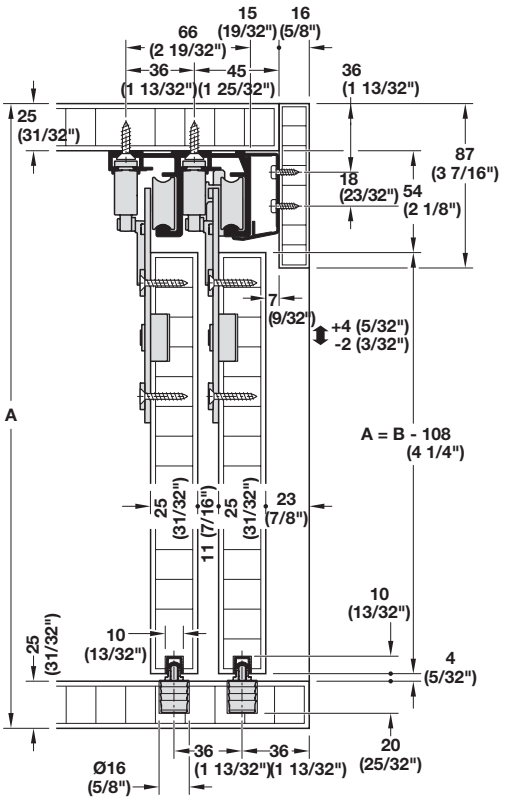

B = door height
A = cabinet height

Drilling pattern

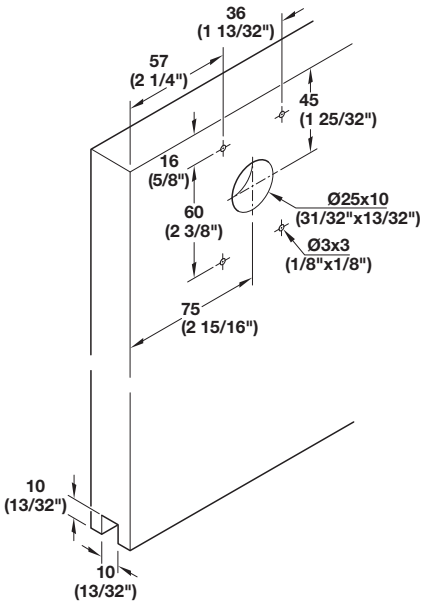

Door overlap

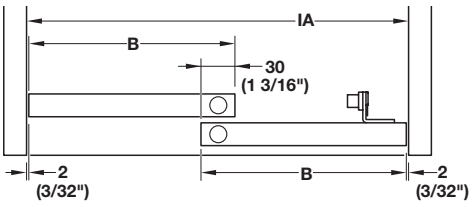

Door width B = (IA + 26 (1 1/32")/2

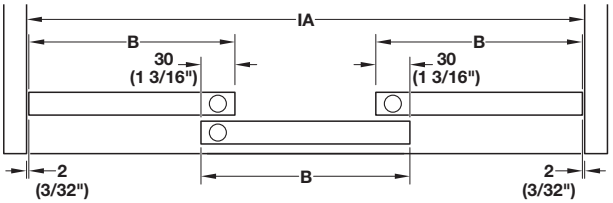

Door width B = (IA + 56 (2 7/32")/3
IA internal cabinet width
B door width

Dimensional data not binding. Dimensions in mm, inches are approximate. We reserve the right to alter specifications without notice.

→ HAWA Combino 65 H IF

	Version	Supplied with	Item No.
For 2 sliding doors	With clip-in door stopper	4 running gears 4 door stoppers (2 with clip-in door stopper/2 stoppers) 2 guides 1 door follower 1 set of mounting material	405.71.004
For 3 doors		6 running gears 4 door stoppers (3 with clip-in door stopper/1 stopper) 3 guides 1 buffer set 1 set of mounting material	405.71.005

Supplied with
1 set

Note
Please order running and guide track separately.

→ Soft Closing Mechanism Set

	Version	Door weight	Supplied with	Item No.
For 2 or 3 doors	**For 2 doors** 1 set: For soft close on one side 2 sets: For soft close on both sides **For 3 doors order 2 sets** 1 set: Provides soft close for front center door into both directions 1 set: Provides soft close for 2 rear doors into one direction	Up to 65 kg (143 lbs.)	2 soft closing mechanism units 2 activators	405.11.323

Supplied with
1 set

→ Tracks and Accessories

Description		Material	Finish	Length	Item No.
Double running track, pre-drilled, guide track for glue mounting	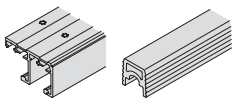	Aluminum	anodized	2.5 m (8' 2 7/16")	405.70.713
				4.0 m (13' 1 1/2")	405.70.714
Single running track, pre-drilled, for door thickness > 28 mm (1 1/8")	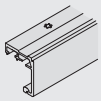	Aluminum	anodized	2.5 m (8' 2 7/16")	405.69.603
				4.0 m (13' 1 1/2")	405.69.604
Guide track, bottom, for glue mounting	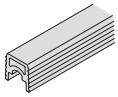	Plastic	gray	2.5 m (8' 2 7/16")	406.73.803
				3.5 m (11' 5 13/16")	406.73.804
Fixing profile for wood panel, pre-drilled, for clipping into single or double running track every 700–800 mm (27 9/16"–31 1/2")	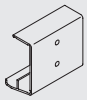	Aluminum	anodized	–	406.31.400

Planofit straightening fitting sets page 7.91

Dimensional data not binding. Dimensions in mm, inches are approximate. We reserve the right to alter specifications without notice.

HAWA Combino 20/35 H VF

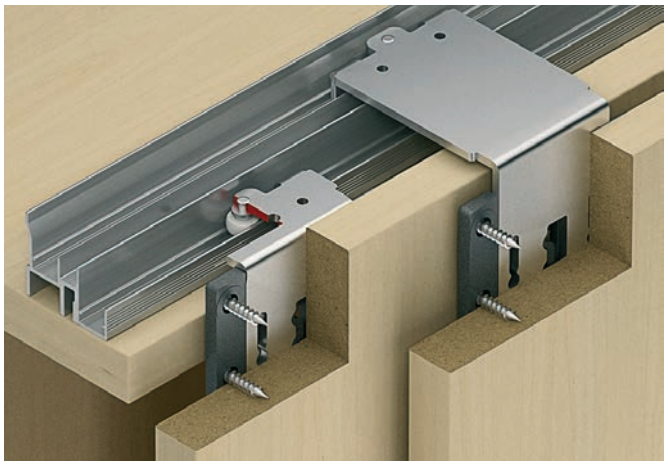

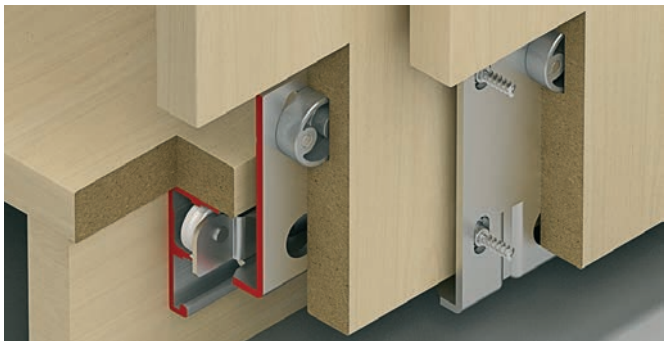

- > Door weight: max. 20/35 kg (44/77 lbs.)
- > Door height: max. 2,200 mm (7' 2 5/8")
- > Door width: max. 1,200 mm (47 1/4")
- > Door thickness: 19 mm (3/4")
- > Recommended door overlay: 20 mm (25/32")
- > Eccentric height adjustment: +4 / -2 mm (+5/32" / -3/32") on running gear
- > Door mounting via spring guide bolt
- > Optional soft closing mechanism

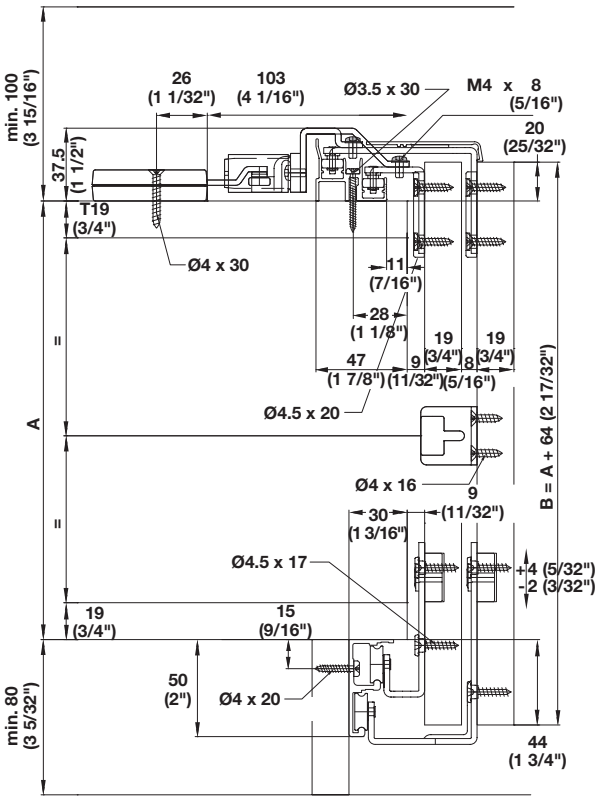

Mounting door to panel

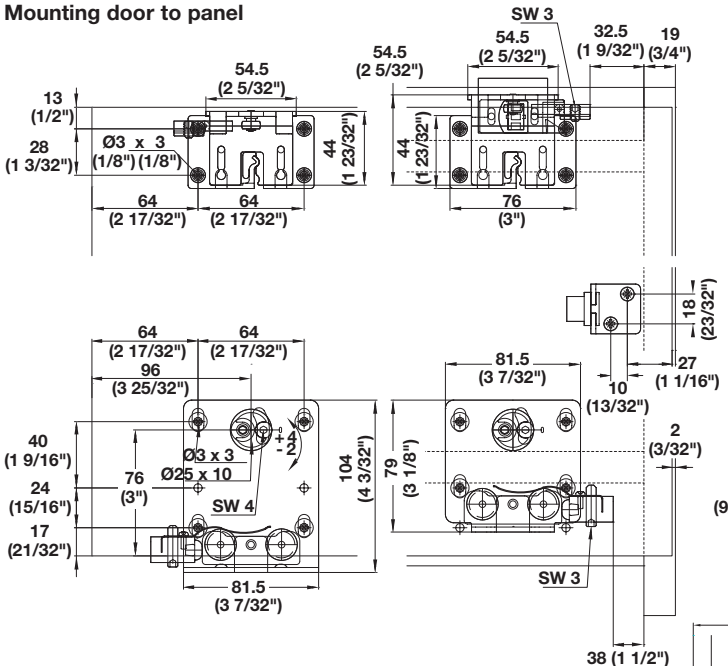

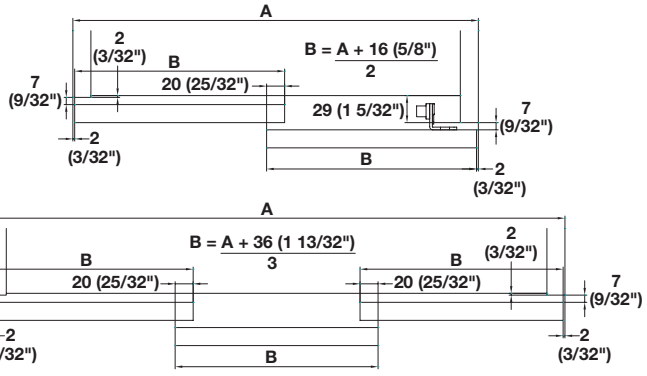

Dimensional data not binding. Dimensions in mm, inches are approximate. We reserve the right to alter specifications without notice.

→ HAWA Combino 20/35 H VF Set

	Version	Supplied with	Model series	Item No.
For 2 doors	With clip-in door stopper	4 running gears 4 guides 8 door stoppers (6 with clip-in door stopper, 2 stoppers) 1 door follower 1 set of mounting material	Combino 20 H VF	405.91.125
			Combino 35 H VF	405.91.224
For 3 doors		6 running gears 6 guides 8 door stoppers (7 with clip-in door stopper, 1 stopper) 2 door follower 1 set of mounting material	Combino 35 H VF	405.91.232

Supplied With
1 set

Note
Please order running and guide tracks separately. Soft closing mechanism on one side is possible from pitch length of min. 260 mm (10 1/4"), both sides from 460 mm (18 1/8"). Please order soft closing mechanism set for soft closing on both sides separately.

→ Soft Closing Mechanism Set

	Door weight	Supplied with	Item No.
For 2 doors	For up to 18 kg (39 lbs.)	2 soft closing mechanism units 2 door followers, narrow	405.10.006
	For up to 18–40 kg (39–88 lbs.)		405.10.004

Supplied With
1 set

Note
Please order running and guide tracks separately. Soft closing mechanism on one side is possible from pitch length of min. 260 mm (10 1/4"), both sides from 460 mm (18 1/8"). Please order soft closing mechanism set for soft closing on both sides separately.

→ Tracks and Accessories

Description		Material	Finish	Length	Item No.
Double guide track, pre-drilled	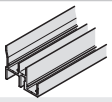	Aluminum	anodized	2.5 m (8' 2 7/16")	405.52.026
				3.5 m (11' 5 13/16")	405.52.036
Double running track, pre-drilled		Aluminum	anodized	2.5 m (8' 2 7/16")	406.31.902
				3.5 m (11' 5 13/16")	406.31.903
Cover profile, top/bottom	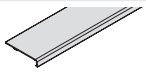	Aluminum	anodized	2.5 m (8' 2 7/16")	406.31.912
Center door stopper, required only on 3 door application	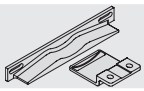	Steel/Plastic	–	–	405.93.020

Dimensional data not binding. Dimensions in mm, inches are approximate. We reserve the right to alter specifications without notice.

HAWA Combino 65 H VF

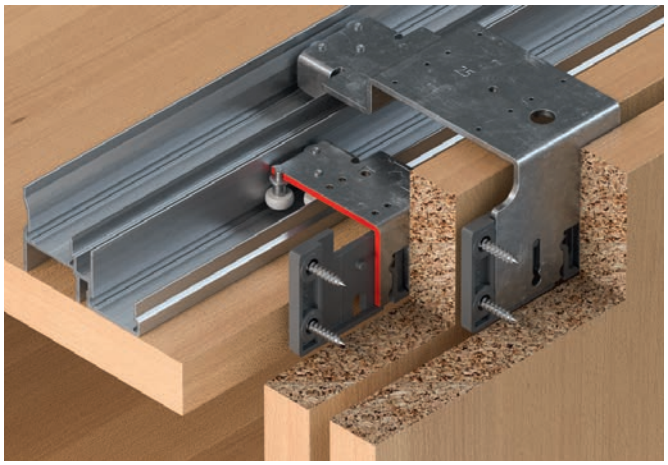

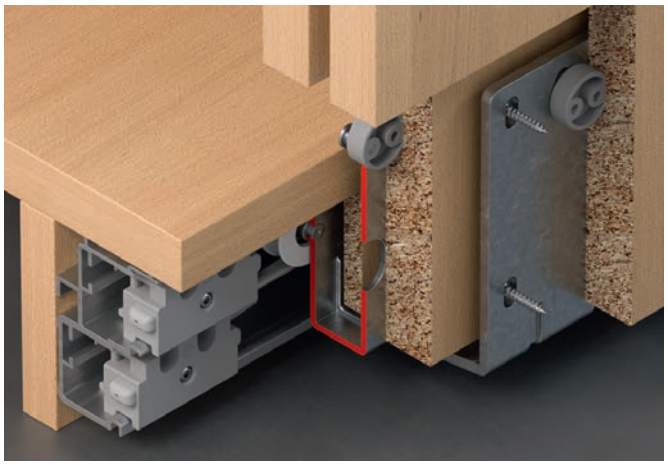

- > Door weight: max. 65 kg (143 lbs.)
- > Door height: max. 2,600 mm (102 3/8")
- > Door width: max. 1,400 mm (55 1/8")
- > Door thickness: 25 mm (31/32")
- > Height adjustment: +4 / -2 mm (+5/32" / -3/32")
- > Optional soft closing mechanism

Installation dimensions

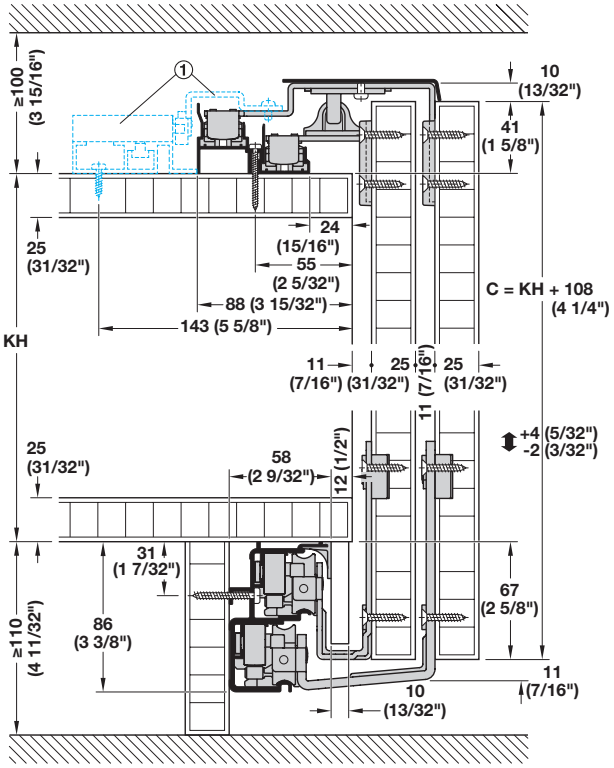

Soft closing mechanism for center door
C = door height
KH = cabinet height

Note
Insert top door stoppers before installing double top guide track.

Drilling pattern

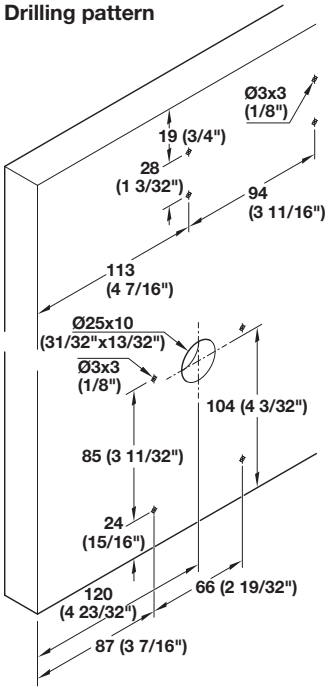

Door overlap

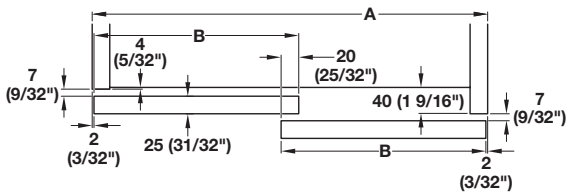

Door width B = (A + 16)/2

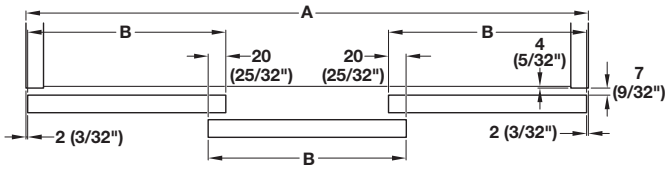

Door width B = (A + 36)/3
A cabinet width
B door width

Dimensional data not binding. Dimensions in mm, inches are approximate. We reserve the right to alter specifications without notice.

→ HAWA Combino 65 H VF Set

	Version	Supplied with	Item No.
For 2 sliding doors	With clip-in door stopper	4 running gears 8 door stoppers (2 with clip-in door stopper, 6 stoppers) 4 guides 6 cip panels	405.71.000
For 3 doors		6 running gears 8 door stoppers (2 with clip-in door stopper, 6 stoppers) 6 guides 9 clip panels	405.71.001

Note
Please order running track, guide track and soft closing mechanism separately.

→ Soft Closing Mechanism Set

	Version	Door weight	Supplied with	Item No.
For 2 or 3 doors	**For 2 doors** 1 set: For soft closing in one direction 2 sets: For soft closing in both directions **For 3 doors order 2 sets** 1 set: Provides soft close for front center door into both sliding directions 1 set: Provides soft close for 2 rear doors into one direction	For up to 65 kg (143 lbs.)	2 soft closing mechanism units 2 activators	405.11.324

Supplied with
1 set

→ Soft Closing Mechanism for Center Door

	Door weight	Supplied with	Item No.
3 doors	For up to 65 kg (143 lbs.)	1 soft close mechanism 1 activator	405.11.325

→ Tracks

Description		Material	Finish	Length	Item No.
Track set consisting of: Double running track, double guide track and lower profile	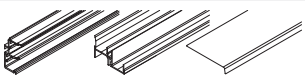	Aluminum	anodized	2.5 m (8' 2 7/16")	405.70.733
				4.0 m (13' 1 1/2")	405.70.734
Soft stop for guides. Can only be used in conjunction with soft close mechanism. Recommended for a door ratio larger than 1:3	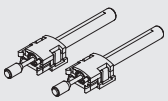	Plastic	gray	–	405.11.331

Planofit straightening fitting page 7.91

Dimensional data not binding. Dimensions in mm, inches are approximate. We reserve the right to alter specifications without notice.

HAWA Combino 65 H MF

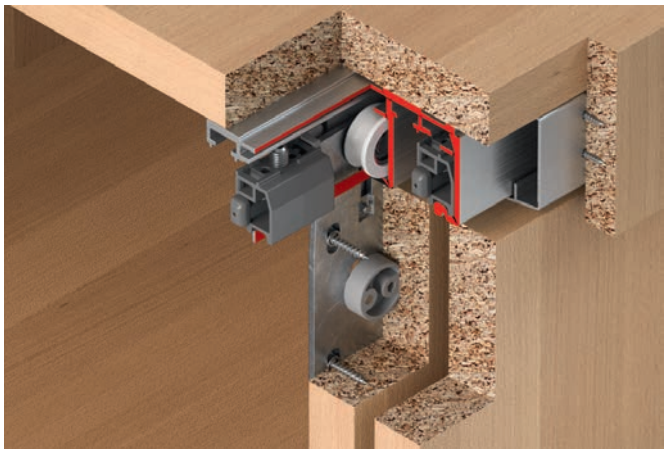

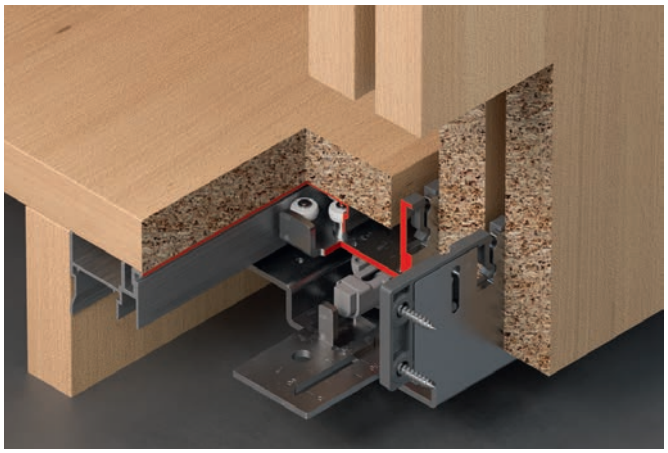

- > Door weight: max. 65 kg (143 lbs.)
- > Door height: max. 2,600 mm (102 3/8")
- > Door width: max. 1,400 mm (55 1/8")
- > Door thickness: 25 mm (31/32")
- > Height adjustment: +4 / -2 mm (+5/32" / -3/32")
- > Optional soft closing mechanism

Drilling pattern

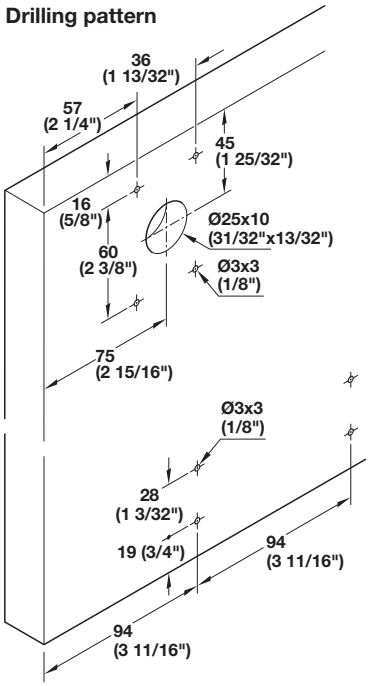

Installation dimensions

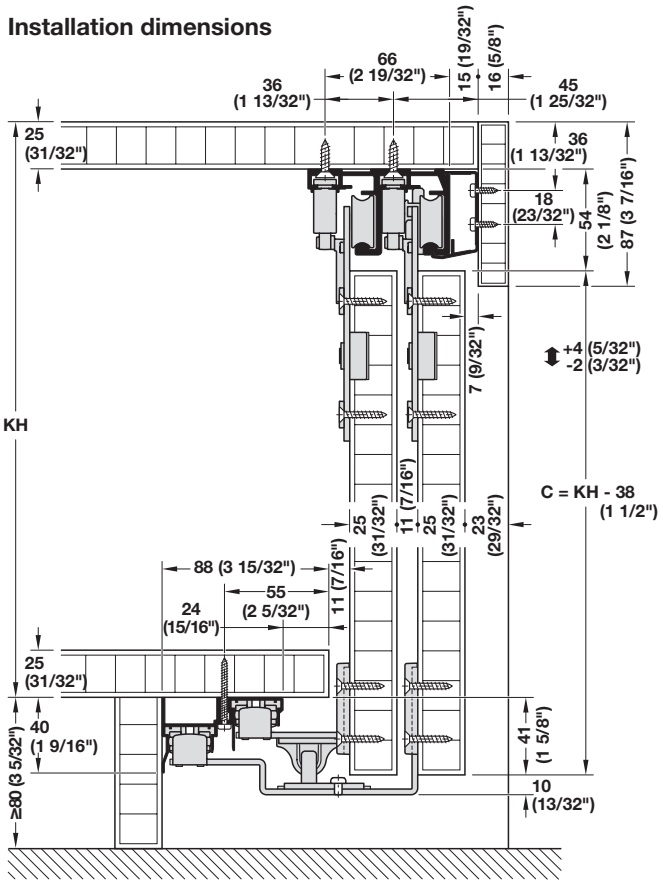

With soft and self closing
C = door height
KH = cabinet height

Door overlap

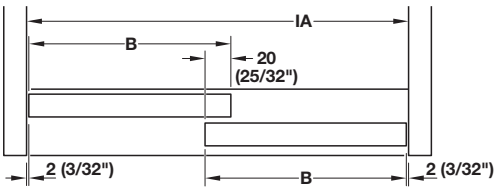

Door width B = (IA + 16)/2

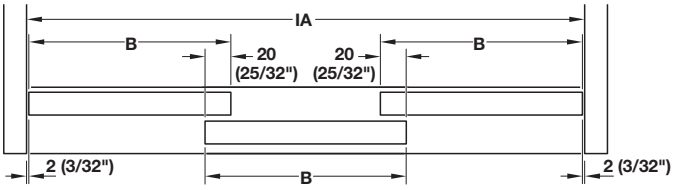

Door width B = (IA + 36)/3
IA internal cabinet width, B door width

Dimensional data not binding. Dimensions in mm, inches are approximate. We reserve the right to alter specifications without notice.

→ HAWA Combino 65 H MF Set

	Version	Supplied with	Item No.
For 2 sliding doors	With clip-in door stopper	4 running gears 4 guides 8 door stoppers with clip-in door stopper 4 track end pieces Mounting material	405.71.002
For 3 doors		6 running gears 6 guides 8 door stoppers with clip-in door stopper 4 track end pieces Mounting material	405.71.003

Supplied with
1 set

Note
Please order running and guide track separately.

→ Soft Closing Mechanism Set

	Version	Door weight	Supplied with	Item No.
For 2 or 3 doors	**For 2 doors** 1 set: For soft close on one side, 2 sets: For soft close on both sides **For 3 doors order 2 sets** 1 set: Provides soft close for front center door into both sliding directions 1 set: Provides soft close for 2 rear doors into one direction	For up to 65 kg (143 lbs.)	2 soft closing mechanism units 2 activators	405.11.323

Supplied with
1 set

→ Tracks and Accessories

Description		Material	Finish	Length	Item No.
Track set consisting of: Double running track, pre-drilled, double guide track, pre-drilled	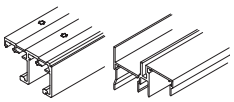	Aluminum	anodized	2.5 m (8' 2 7/16")	405.70.723
				4.0 m (13' 1 1/2")	405.70.724
Soft stop for guides. Can only be used in conjunction with soft close mechanism. Recommended for a door larger than 1:3	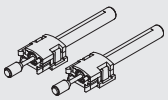	Plastic	gray	–	405.11.331
Fixing profile for wood panel, pre-drilled, for clipping into single or double running track every 700–800 mm (27 9/16"–31 1/2")	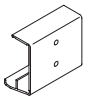	Aluminum	anodized	–	406.31.400

Planofit straightening fitting page 7.91

Dimensional data not binding. Dimensions in mm, inches are approximate. We reserve the right to alter specifications without notice.

HAWA Combino L 40

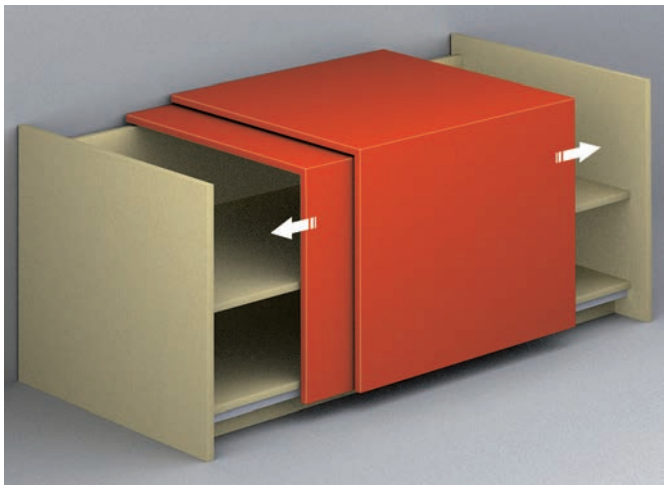

- > Door weight: max. 40 kg (88 lbs.)
- > Door height: max. 1,500 mm (59 1/16")
- > Door width: max. 1,500 mm (59 1/16")
- > Door depth: max. 700 mm (27 9/16")
- > Door thickness: 19 mm (3/4")
- > Eccentric height adjustment: +4 / -2 mm (+5/32" / -3/32") on running gear
- > Eccentric depth adjustment: ±3 mm (1/8") on running gear
- > Bottom running gear, 1 roller
- > Guided by running gear, ball bearing mounted, plastic-coated rollers
- > Top and bottom door stopper, bottom stopper with spring
- > Optional soft closing mechanism

Installation dimensions

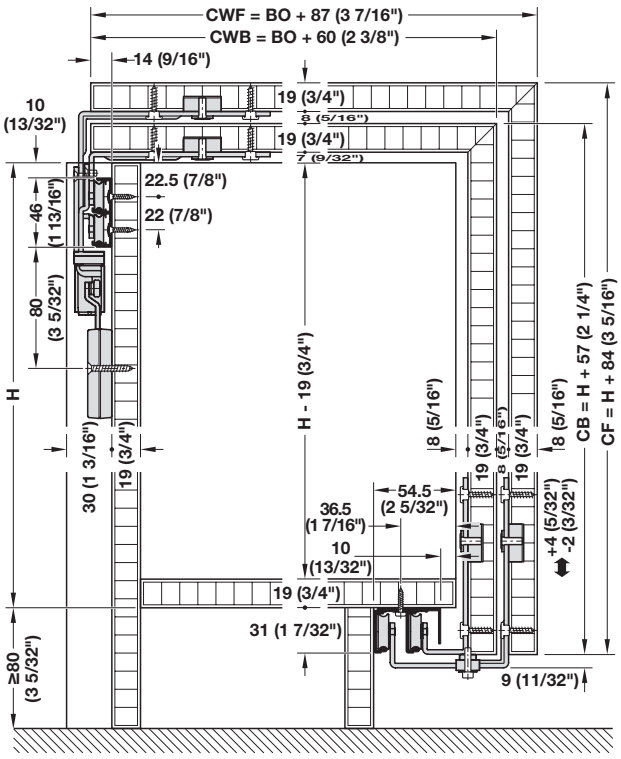

H = height
BO = base panel dept
CF = front door heighth
CB = rear door height
CWF = front door depth
CWB = rear door depth

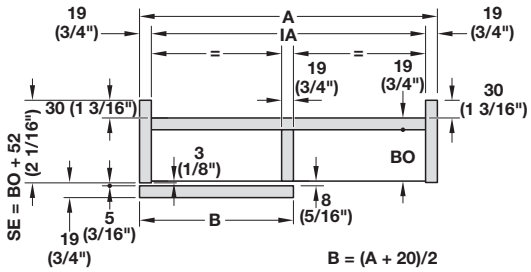

B = (A + 20)/2

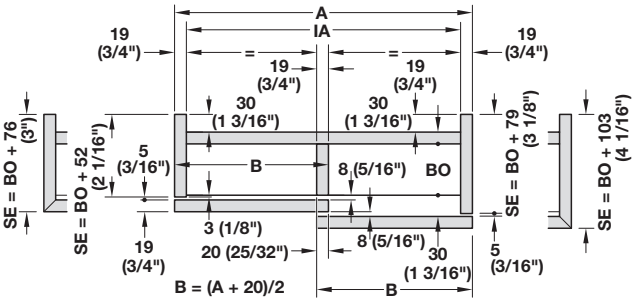

B = (A + 20)/2

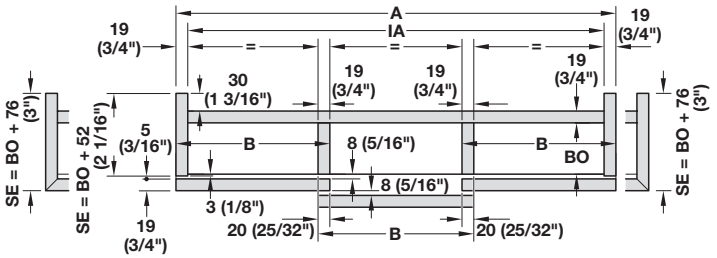

B = (A + 40)/3

Side panel removable for door mounting

A = cabinet width
B = door width
IA = internal cabinet width
BO = base panel depth
SE = side panel width

Dimensional data not binding. Dimensions in mm, inches are approximate. We reserve the right to alter specifications without notice.

→ HAWA Combino L 40 Set

	Version	Supplied with	Item No.
For 1 door	With clip-in door stopper	2 running gears 2 guides 4 door stoppers (2 with clip-in door stopper/2 stoppers)	403.31.000
For 2 doors		4 running gears 4 guides 8 door stoppers (4 with clip-in door stopper/4 stoppers)	403.31.001
For 3 doors		6 running gears 6 guides 8 door stoppers (4 clip-in door stoppers/4 stoppers)	403.31.002

Note
Please order double running and double guide track separately.

→ Soft Closing Mechanism Set

	Version	Suitable for	Supplied with	Item No.
For 2 doors	On one side	For door weight 18-40 kg (39.6–88 lbs.)	2 soft closing mechanisms 2 door followers, narrow	405.10.001

Supplied with
1 set

Note
Adapter set is required, order separately.

→ Tracks and Accessories

Description		Material	Finish	Length	Item No.
Double bottom running track, for screw mounting with pan head chipboard screws Ø3.5 mm (1/8")	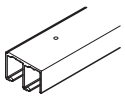	Aluminum	silver colored anodized	2.5 m (8' 2 7/16")	403.32.926
				3.5 m (11' 5 13/16")	403.32.936
Double top guide track, for screw mounting with chipboard screws with countersunk head Ø3.5 mm (1/8")		Aluminum	silver colored anodized	2.5 m (8' 2 7/16")	403.33.926
				3.5 m (11' 5 13/16")	403.33.936
Adapter set for soft closing mechanism	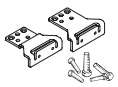	Steel	zinc-plated	–	405.10.097

Planofit straightening fitting page 7.91

Dimensional data not binding. Dimensions in mm, inches are approximate. We reserve the right to alter specifications without notice.

HAWA Regal A 25 H VF

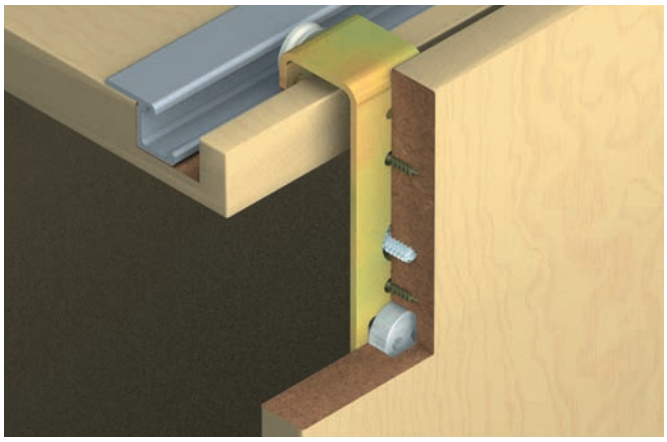

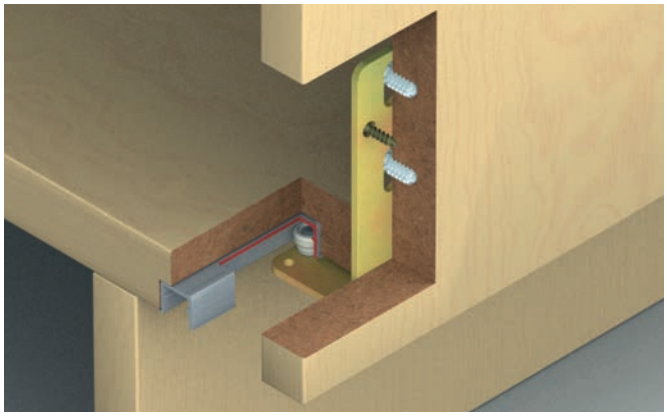

- > Door weight: max. 25 kg (55 lbs.)
- > Door height: max. 2,400 mm (94 1/2")
- > Door width: max. 1,200 mm (47 1/4")
- > Door thickness: 19–26 mm (3/4"–1 1/32")
- > Eccentric height adjustment: ±2 mm (3/32") on running gear
- > Rails are not visible from the front of the cabinet
- > Easy door mounting

Installation dimensions

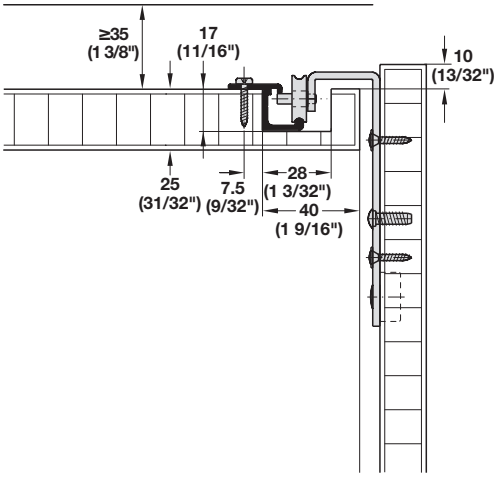

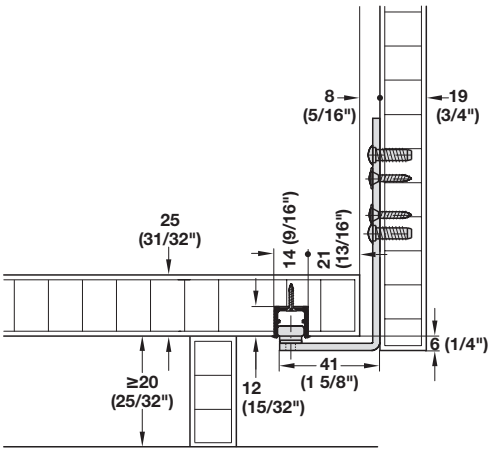

Drilling pattern

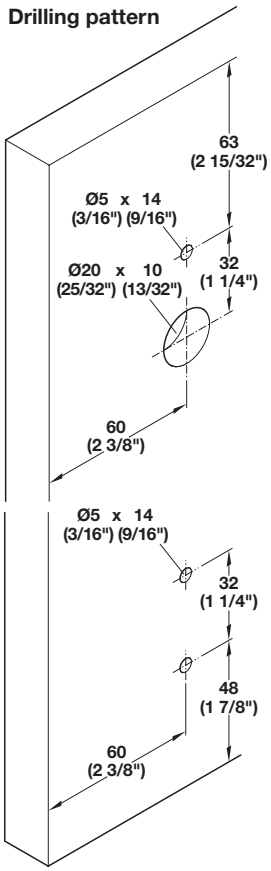

Dimensional data not binding. Dimensions in mm, inches are approximate. We reserve the right to alter specifications without notice.

→ HAWA Regal A 25 H VF Set

	Supplied with	Item No.
For 1 door	2 running gears 4 door stoppers (2 with clip-in door stopper, 2 stoppers) 2 guides	405.55.011

Supplied with
1 set

Note
Please order running and guide track separately.

→ Tracks and Accessories

Description		Material	Finish	Length	Item No.
Upper track, for screw mounting	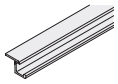	Aluminum	anodized	2.5 m (8' 2 7/16")	405.56.002
				3.5 m (11' 5 13/16")	405.56.003
Lower guide channel, with screw holes, for glue mounting in cabinet bottom panel min. 19 mm (3/4") wood thickness		Aluminum	mill	2.5 m (8' 2 7/16")	405.30.026
				3.5 m (11' 5 13/16")	405.30.036
Door stop, optional	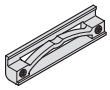	Plastic	gray	–	405.33.030

Planofit straightening fitting page 7.91

Dimensional data not binding. Dimensions in mm, inches are approximate. We reserve the right to alter specifications without notice.

HAWA Regal B 25 H VF

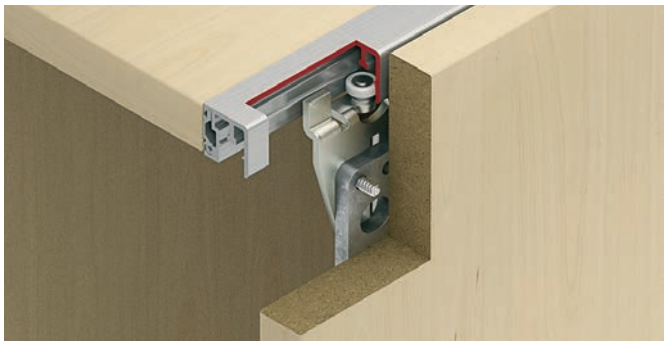

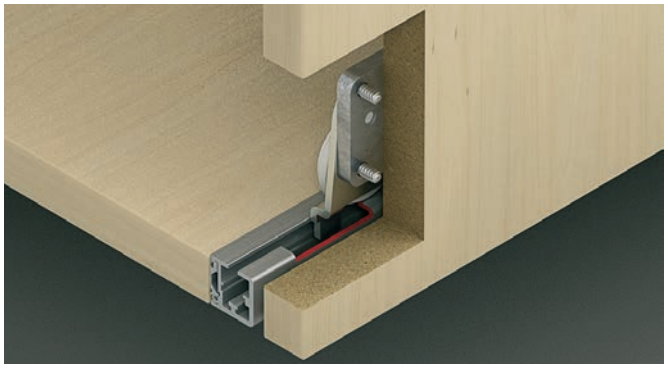

- > Door weight: max. 25 kg (55 lbs.)
- > Door height: max. 2,000 mm (78 3/4")
- > Door width: max. 1,200 mm (47 1/4")
- > Door thickness: 16–50 mm (5/8"–2")
- > Eccentric height adjustment: ±2 mm (3/32") on running gear
- > Elegant design through clip-on rail method
- > Top or bottom running
- > Optional soft closing mechanism

Mounting example bottom running

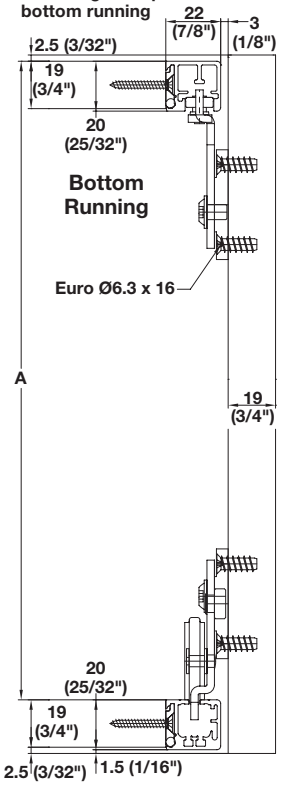

Mounting example top running

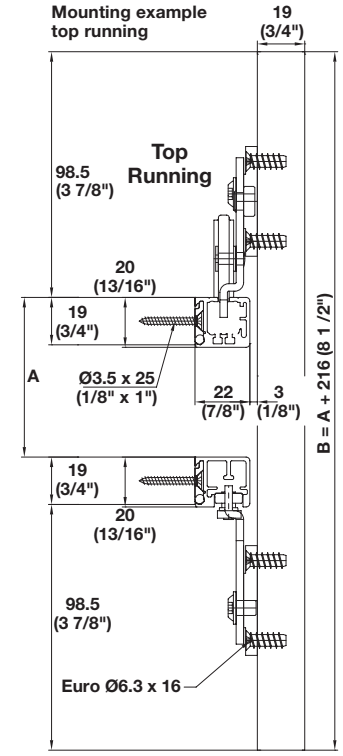

Running and Guide Track Installation

1.

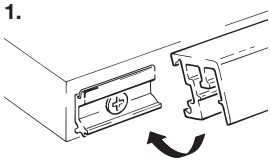

2.

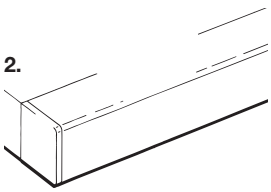

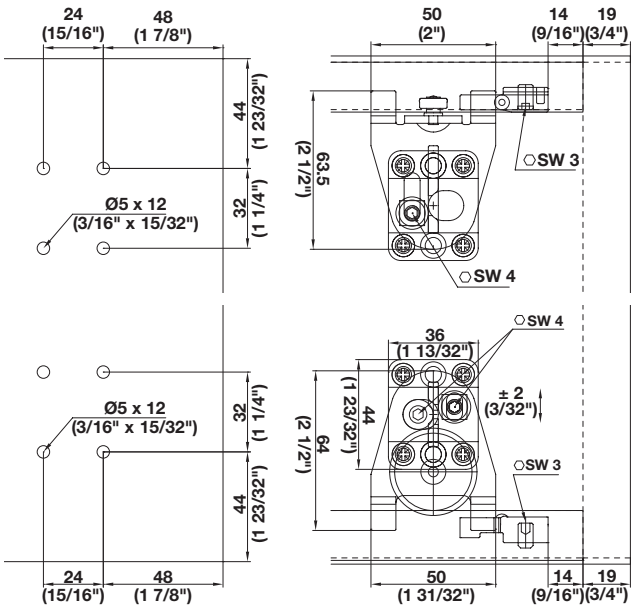

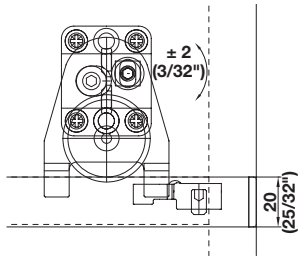

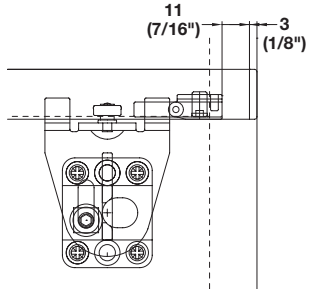

Dimensional data not binding. Dimensions in mm, inches are approximate. We reserve the right to alter specifications without notice.

→ HAWA Regal B 25 H VF Set

	Version	Supplied with	Item No.
For 1 door	With clip-in door stopper	2 running gears 4 door stoppers (2 with clip-in door stopper, 2 stoppers) 2 guides 22 fixing clips 4 safety clips 4 cover caps 1 mounting jig	405.55.214
	With soft closing mechanism for door weight up to 15 kg (33 lbs.), both sides	2 running gears with soft closing mechanism 6 door stoppers (2 with clip-in door stopper/2 for soft closing mechanism/2 stoppers) 2 guides 22 fixing clips 4 safety clips 4 cover caps 1 mounting jig	405.55.224
	With soft closing mechanism for door weight up to 25 kg (55 lbs.), both sides		405.55.225

Supplied with
1 set

Note
Please order running and guide track separately. Soft closing mechanism on one side is possible from pitch length of min. 300 mm (11 13/16"), both sides from 540 mm (21 1/4").

→ Tracks and Accessories

Description		Material	Finish	Length	Item No.
Running track, clip-on	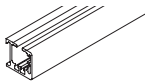	Aluminum anodized	silver colored	2.5 m (8' 2 7/16")	405.69.912
Guide track, clip-on	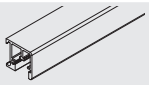	Aluminum anodized	silver colored	2.5 m (8' 2 7/16")	405.61.912
Vertical profile, clip-on. Mounts to side panel, helps conceal the gap between the door and shelf.	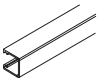	Aluminum anodized	silver colored	2.5 m (8' 2 7/16")	400.88.902
Fixing clip with screw For use with vertical profile 400.88.902.	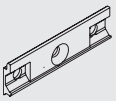	Zinc die-cast	gray	–	405.67.095
Spacers for two doors sliding on the same plane. Spacers act as a bumper to prevent doors from hitting each other.	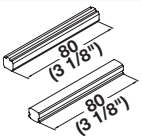	Plastic	gray	–	405.67.110

Dimensional data not binding. Dimensions in mm, inches are approximate. We reserve the right to alter specifications without notice.

Hangar 14/28 IF

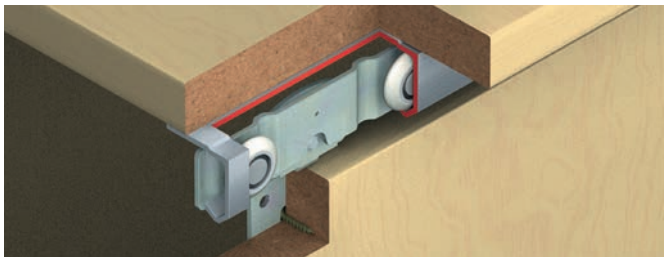

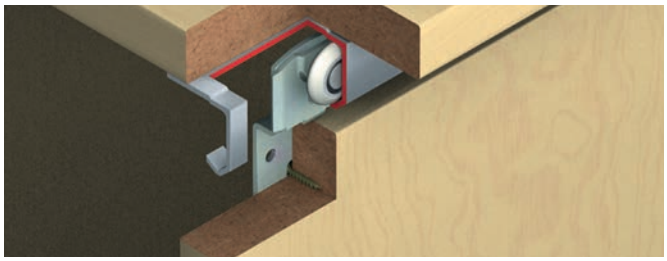

> Door weight for single running gear: max. 14 kg (31 lbs.)
> Door weight for double running gear: max. 28 kg (62 lbs.)
> Door thickness: 19–35 mm (3/4"–1 3/8")
> For single and bypassing sliding wood doors
> Smooth operation
> Simple installation
> Vertically adjustable ±5 mm (±3/16") on running gear using slot)

Sliding door fitting installation

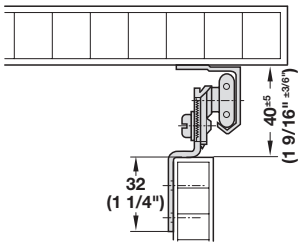

Single top running track

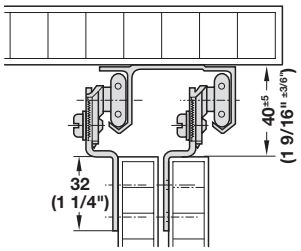

Double top running track,
door thickness 19 mm (3/4")

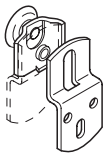

The screw-on plate of the rear running gear must be moved when using 2 doors with door thickness 19 mm (3/4")

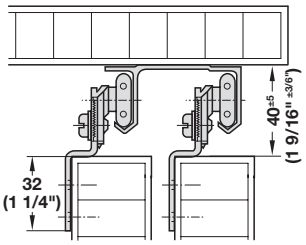

Double top running track,
door thickness max. 35 mm (1 3/8")

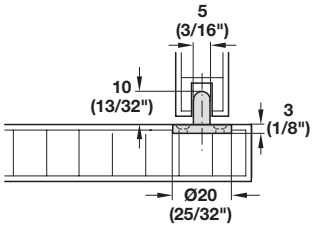

Single guide for screw mounting
and press fitting into drill hole

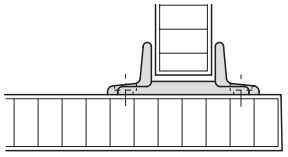

Single guide for screw mounting

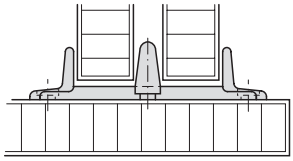

Double guide for screw mounting

Dimensional data not binding. Dimensions in mm, inches are approximate. We reserve the right to alter specifications without notice.

Hangar 14/28 IF

→ Hangar 14/28 IF Running Gear

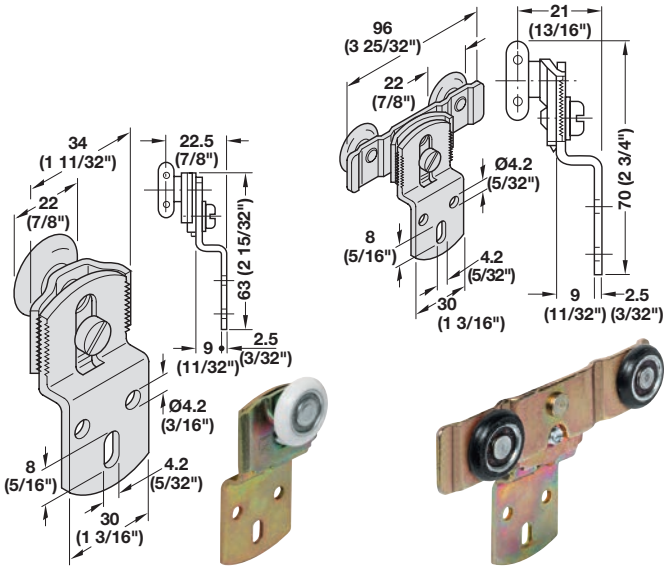

> Version: With screw-on plate for lateral attachment
> Material: Steel, yellow chromatized

Suitable for	Item No.
Hangar 14	407.13.906
Hangar 28	407.14.903

→ Running tracks

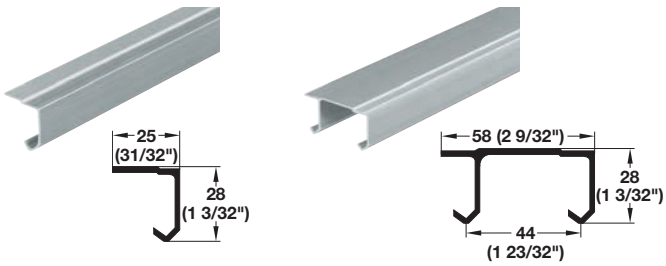

> Material: Aluminum, bright

Description	Length	Item No.
Single top running track, for screw mounting (with pre-drilled holes)	2.5 m (8' 2 7/16")	407.10.042
	3.5 m (11' 5 13/16")	407.10.043
Double top running track, for door thickness max. 35 mm (1 3/8"), for screw mounting (with pre-drilled holes)	2.5 m (8' 2 7/16")	407.11.012
	3.5 m (11' 5 13/16")	407.11.013

Planofit straightening fitting page 7.91

→ Guides

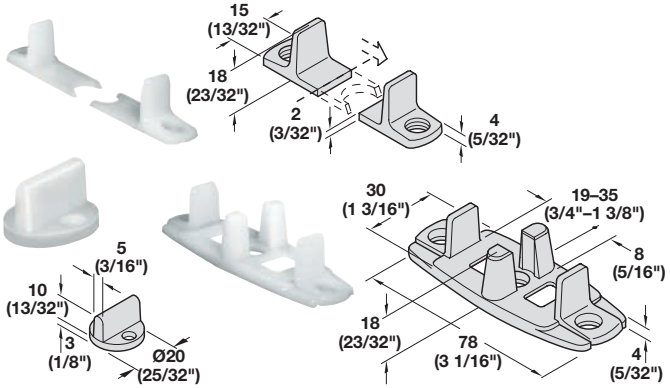

> Material: Plastic; Color: natural

Description	Item No.
Guide, for press fitting and screw mounting into drill hole	407.01.942
Single guide 2-piece, for screw mounting	407.01.960
Double guide, 2-piece, for door thickness 19–35 mm (3/4"–1 3/8"), for screw mounting	407.01.951

→ Buffer

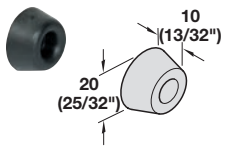

> For screw mounting
> Material: Rubber

Color	Item No.
black	407.01.930

→ Door Follower

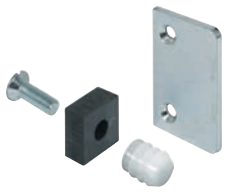

	Item No.
	407.01.988

Supplied with
1 Press-fit sleeve: Polyamide
1 Rubber buffer
1 Screw
1 Stop plate: Steel, galvanized

Installation

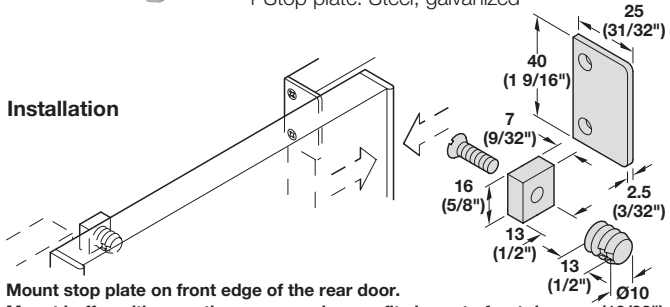

Mount stop plate on front edge of the rear door.
Mount buffer with mounting screw and press-fit sleeve to front do.

Dimensional data not binding. Dimensions in mm, inches are approximate. We reserve the right to alter specifications without notice.

Häfele Slido F-Line15 55A

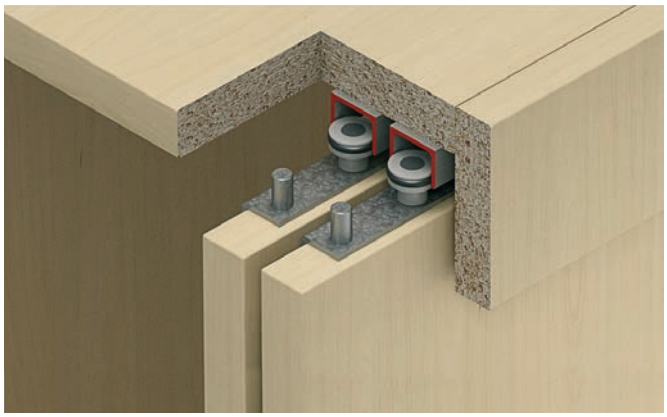

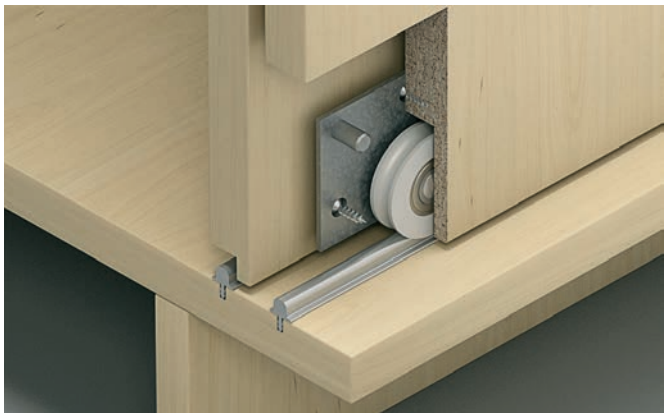

- > Door weight: max. 55 kg (121 lbs.)
- > Door thickness: ≥16 mm (5/8")
- > Excellent running characteristics due to large diameter rollers
- > Separate running and guide tracks eliminate door thickness restrictions
- > Bottom running gear, 1 roller, guided by steel ball bearing

X = Door thickness
Door height = internal cabinet height - 28 mm (1 3/32")

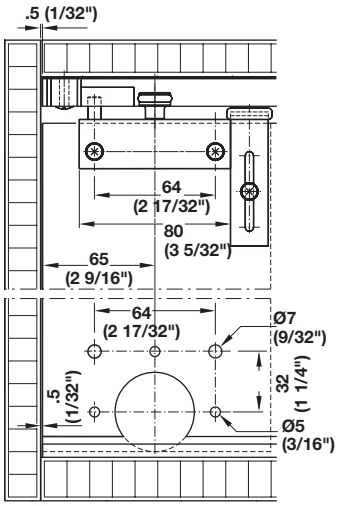

Drilling pattern

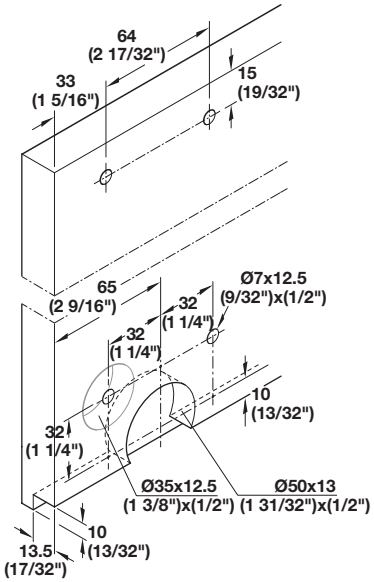

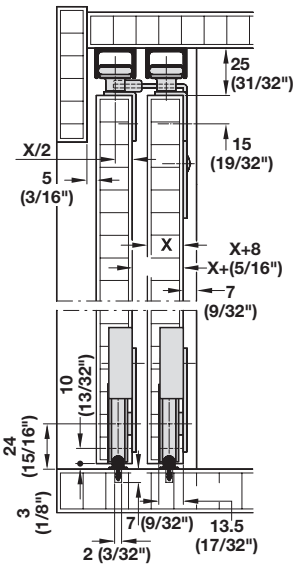

Press fit track

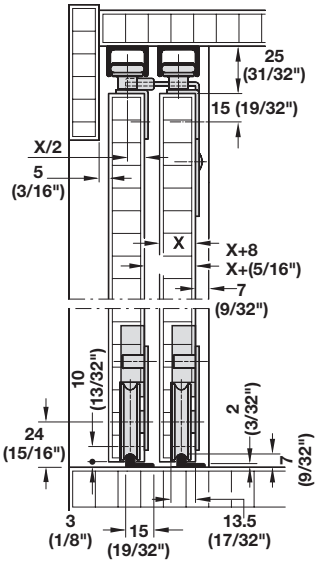

Screw mounted track

Dimensional data not binding. Dimensions in mm, inches are approximate. We reserve the right to alter specifications without notice.

→ Häfele Slido F-Line15 55A Set

Version			Item No.
For 2 doors	Without height adjustment	4 running gears 2 buffers 4 anti-derailment devices (1 for rear door/3 for front door) 4 guides 1 door stopper	402.23.000
	With height adjustment	4 running gears 2 height adjustment facilities 2 buffers 4 anti-derailment devices (1 for rear door/3 for front door) 4 guides 1 door stopper	402.23.002
For 3 doors	Without height adjustment	6 running gears 3 buffers 6 anti-derailment devices (2 for rear door/4 for front door) 6 guides 2 door stoppers	402.23.001
	With height adjustment	6 running gears 3 height adjustment facilities 3 buffers 6 anti-derailment devices (2 for rear door/4 for front door) 6 guides 2 door stoppers	402.23.003

Note
The complete set is always delivered without tracks, please order separately.

→ Tracks and Accessories

	Description	Material	Finish	Length	Item No.
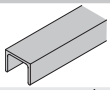	Upper guide, single track, un-drilled	Aluminum	mill	2.5 m (8' 2 7/16")	402.23.802
				3.5 m (11' 5 13/16")	402.23.803
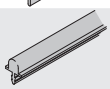	Bottom running track, barbed, press-fit	Aluminum	mill	2.5 m (8' 2 7/16")	402.23.602
				3.5 m (11' 5 13/16")	402.23.603
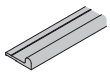	Bottom running track, for screw mounting	Aluminum	silver colored anodized	2.5 m (8' 2 7/16")	402.26.622
				3.5 m (11' 5 13/16")	402.26.623

Dimensional data not binding. Dimensions in mm, inches are approximate. We reserve the right to alter specifications without notice.

S 80

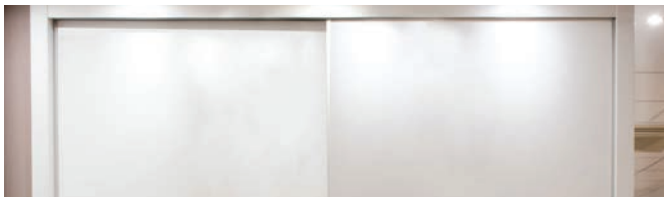

> Door weight: max. 100 kg (220 lbs)
> Smooth, quiet operation
> Vertical handle profiles are used as handles and prevent door from warping
> For 19 mm (3/4") doors
> Optional soft close is available

→ Complete Set with Profiles

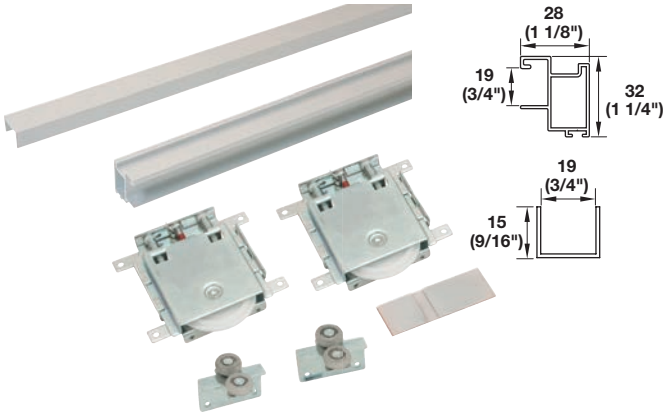

> For assembly of one door

Material	Finish	Item No.
Aluminum, anodized	bright	793.00.300
Aluminum, anodized	matt	793.00.302
Aluminum, powder-coated	oil-rubbed bronze	793.00.321
Aluminum, powder-coated	white	793.00.301

Supplied With
2 Vertical handle profiles 2.7 m (8' 10 5/16")
2 Upper/lower door profiles 1.2 m (3' 11 1/4")
2 Lower rollers and 2 upper rollers: Steel, Plastic
1 Brush seal
1 Door stopper, Plastic
16 Screws, Steel

Note Track set sold separately, below

→ Hardware Set

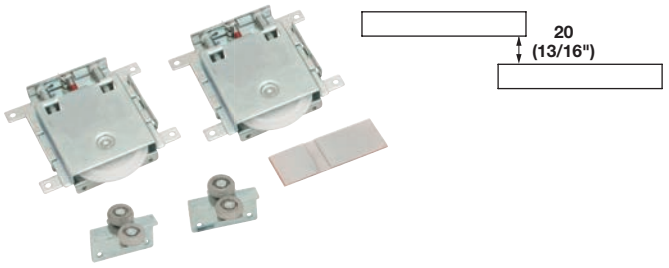

> For one door
> Without handle and door profiles
> There will be a 20 mm (13/16") gap between the doors without profiles
> Material: Steel, Plastic

Finish	Item No.
zinc-plated	793.00.328

Supplied With
2 Lower rollers and 2 upper rollers, Steel/Plastic
1 Door stopper, Plastic,
16 Screws, Steel

Note 1 set is for assembly of 1 door. Track set sold separately.

→ Track Set

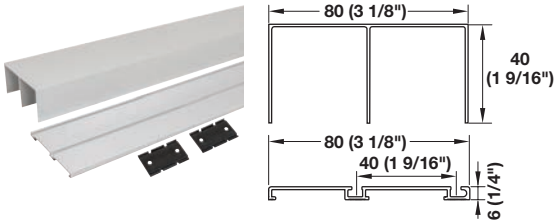

> Quick and easy installation

Material	Finish	2 m (6' 6 3/4")	3 m (9' 10 1/8")
Aluminum, anodized	bright	793.00.306	793.00.307
Aluminum, anodized	matt	793.00.310	793.00.311
Aluminum, powder-coated	oil-rubbed bronze	793.00.323	793.00.324
Aluminum, powder-coated	white	793.00.308	–

Supplied With
Top and bottom tracks, 2 Mounting clips

Dimensional data not binding. Dimensions in mm, inches are approximate. We reserve the right to alter specifications without notice.

S 80

→ Divider Profile

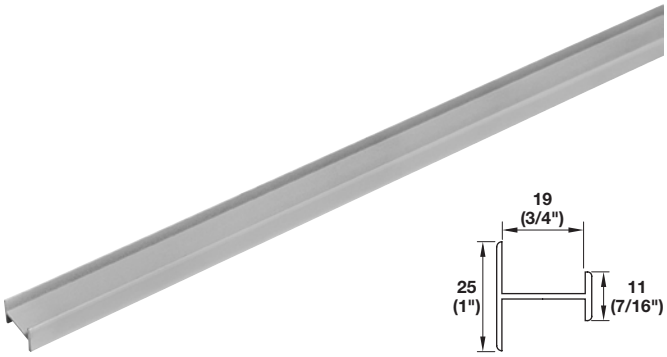

> Used to divide panels horizontally for decorative purposes
> For 19 mm (3/4") doors
> Length: 3 m (9' 10 1/8")

Material	Finish	Item No.
Aluminum, anodized	bright	793.00.318
Aluminum, anodized	matt	793.00.319
Aluminum, powder-coated	oil-rubbed bronze	793.00.327
Aluminum, powder-coated	white	793.00.320

→ Soft Close

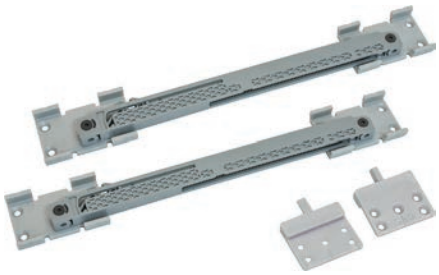

> Prevents door slam
> Quick and easy assembly
> L x W x H: 370 x 10 x 38 mm (14 9/16" x 3/8" x 1 1/2")

Material	Door weight	Item No.
Plastic	40 kg (88 lbs.)	793.00.312
Steel/Plastic	60 kg (132 lbs.)	793.00 313
Steel/Plastic	80 kg (176 lbs.)	793.00.335

> For center doors
> Doors can close from both sides
> Bi-directional allowing doors to move along the entire length of the track
> Allows doors to gently close and sit in the proper position when closed

Material	Door weight	Item No.
Steel/Plastic	40 kg (88 lbs.)	793.00.325

→ Gasket

> Allows S 80 sliding hardware to be used with 6.35 mm (1/4") glass
> L x W x H: 25 m x 11 mm x 16 mm (82' 1/4" x 7/16" x 5/8")
> Material: PVC, clear

	Item No.
	793.00.334

Note
Use silicone to secure the glass.

→ Anti-Derailment Device

> Helps prevent doors from coming off of the tracks
> Material: PVC

	Item No.
	793.00.349

Note
One required per door.

Dimensional data not binding. Dimensions in mm, inches are approximate. We reserve the right to alter specifications without notice.

Häfele Slido F-Flush52 20A

> For flush, inset doors
> Door height: <1,600 mm (63")
> Door width: 450–900 mm (17 11/16"–35 7/16")
> Door thickness: 18–22 mm (23/32"–7/8")
(including handle: 45 mm (1 3/4")
> Door offset: 50 or 70 mm (1 31/32" or 2 3/4")
> Installation depth: 70 mm (2 3/4")
> Material thickness: Min. 18 mm (23/32")
> Bottom running
> Adjustment facility: ±2 mm (3/32") via knurled screw without tools
> Suitable for 2 symmetrical doors
> Without handle, with recessed grip profiles or flush pull handles
> Running and guide tracks for groove mounting, running gears for groove mounting and screw mounting

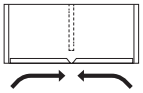

→ Häfele Slido F-Flush52 20A Set

Version	Supplied with	Internal cabinet width	For door width	black anodized	silver colored anodized
For 2 doors	2 running tracks 4 running gears, bottom 4 guide parts, top Spacer plates for door thickness 18 and 20 mm (23/32" and 25/32")	908 (35 3/4")	450 (17 11/16")	407.40.097	407.40.093
		1208 (47 9/16")	600 (23 5/8")	407.40.096	407.40.092
		1508 (59 3/8")	750 (29 1/2")	407.40.095	407.40.091
		1808 (71 3/16")	900 (35 7/16")	407.40.094	407.40.090

Running distance of door

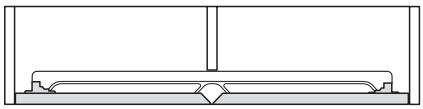

Starting point

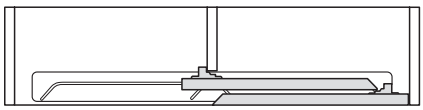

End position

Dimensional data not binding. Dimensions in mm, inches are approximate. We reserve the right to alter specifications without notice.

Häfele Slido F-Flush52 20A

→ Drilling Pattern for Door

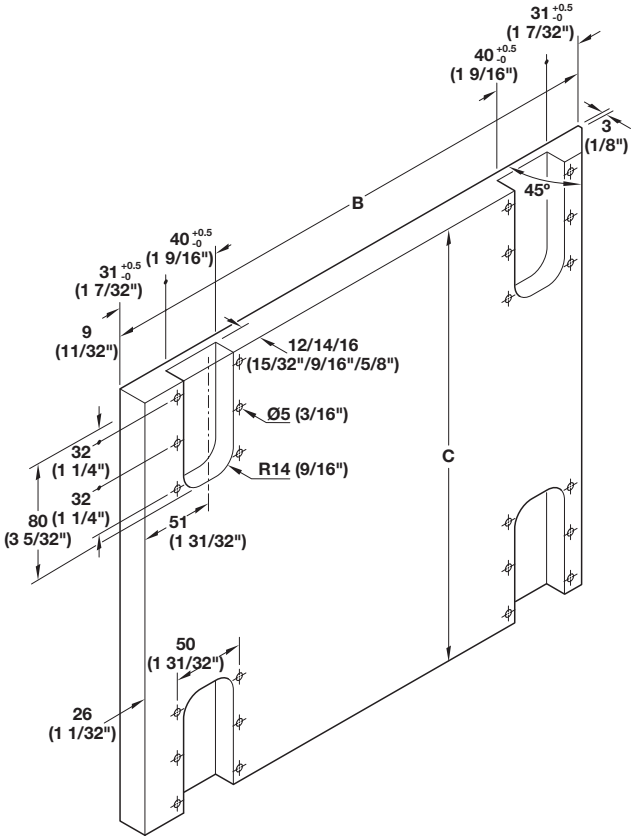

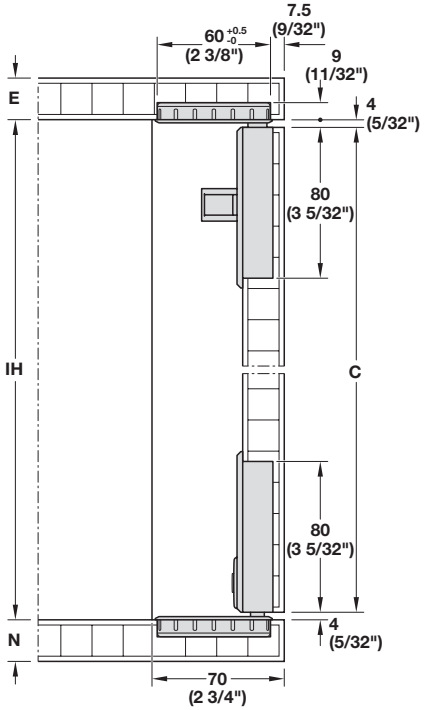

Installation of running gears and guide parts
The number of spacer plates depend on the door thickness

→ Installation Dimensions

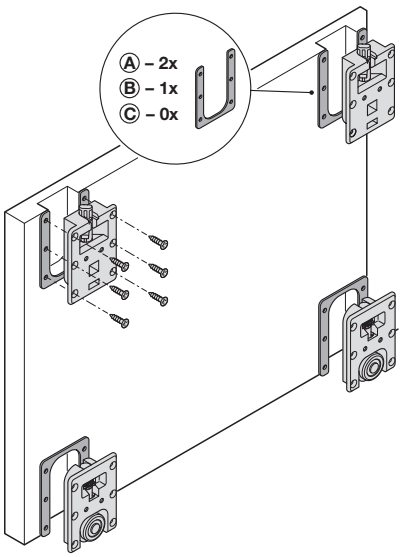

Ⓐ 2 spacer plates each for door thickness 18 mm (23/32")
Ⓑ 1 spacer plate each for door thickness 19–20 mm (3/4"–25/32")
Ⓒ Spacer plate not required for door thickness 21–22 mm (13/16"–7/8")

→ Installation of Running Gears and Guide Parts

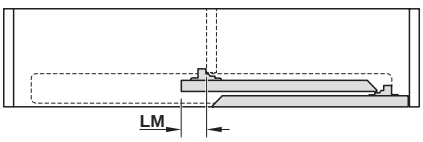

Door offset LM 50 or 70 mm (1 31/32" or 2 3/4"), depending on mounting version

B door width
C door height
E cabinet top panel thickness
IH internal cabinet height
N cabinet base panel thickness

Dimensional data not binding. Dimensions in mm, inches are approximate. We reserve the right to alter specifications without notice.

HAWA Frontino 20 H OS FB

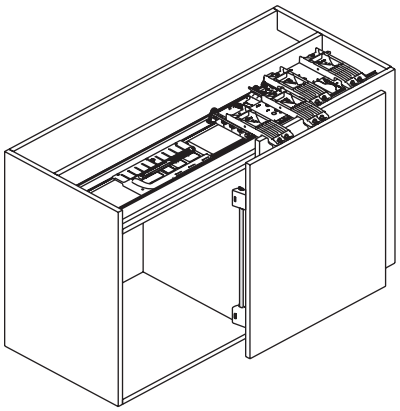

- > Door height: max. 1,000 mm (3' 3 3/8")
- > Door weight: max. 20 kg (44 lbs.)
- > Door thickness: 19–25 mm (3/4"–31/32")
- > Two-way door adjustment
- > Pre-mounted running system allows for minimal installation time
- > Integrated soft opening and soft closing to prevent door slam
- > Doors slide smoothly and quietly, and sit flush when in the closed position

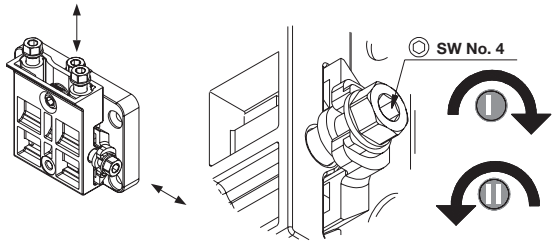

→ Complete Set For Upper Cabinets

Reference	
Door width	TB
Middle panel thickness	MW
Internal cabinet width	KIM
Cabinet height	KH
Side panel thickness	SW
External cabinet width	KAM
Door recess side panel	A
Top panel thickness	C
Door height	TH
Height	H

For internal cabinet width	Item No.
1200–1399 (3' 11 1/4"–4' 7 1/16")	406.02.080
1400–1599 (4' 7 1/8"–5' 2 15/16")	406.02.081
1600–1799 (5' 3"–5' 10 13/16")	406.02.082
1800–1999 (5' 10 7/8"–6' 6 11/16")	406.02.083
2000–2199 (6' 6 3/4"–7' 2 9/16")	406.02.084
2200–2400 (7' 2 5/8"–7' 10 1/2")	406.02.085

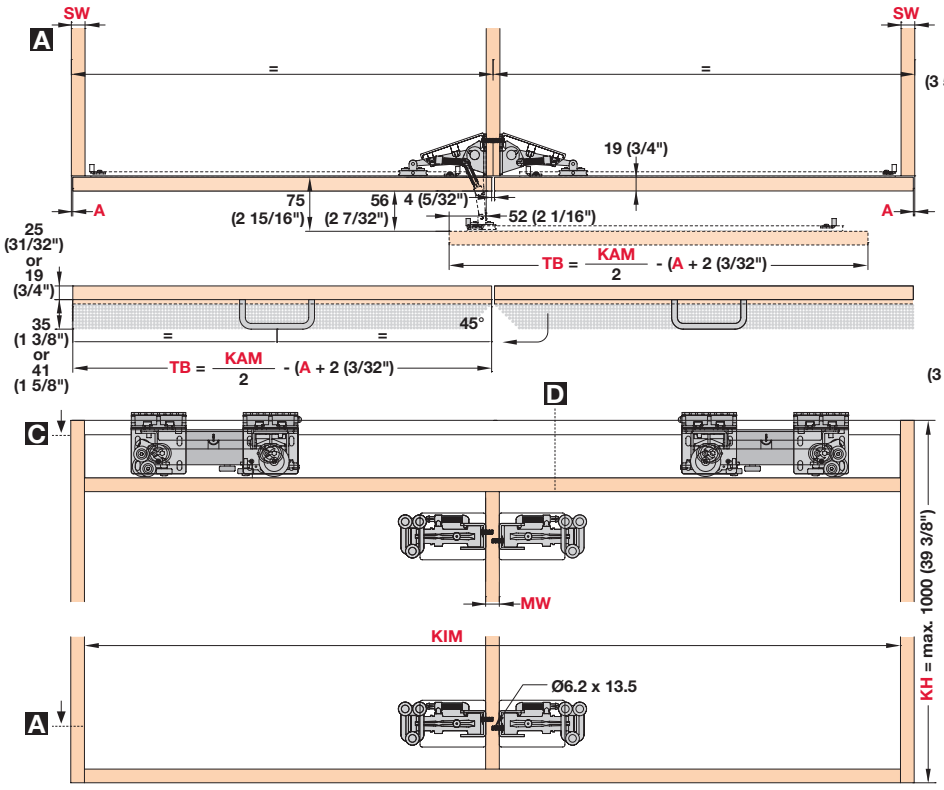

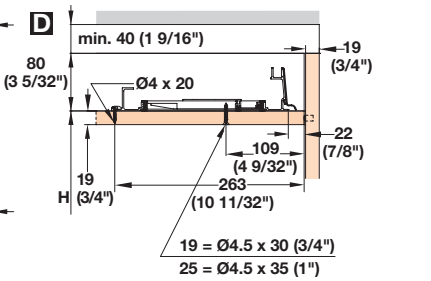

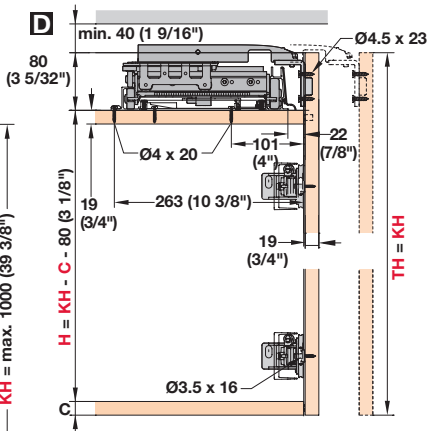

Dimensional data not binding. Dimensions in mm, inches are approximate. We reserve the right to alter specifications without notice.

HAWA Frontino 20 H FB

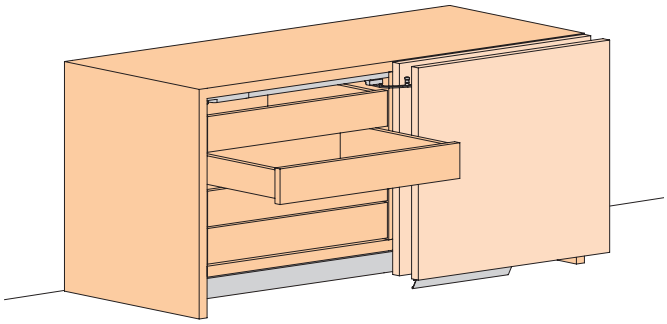

- > Door height: max. 1,000 mm (3' 3 3/8")
- > Door weight: max. 20 kg (44 lbs.)
- > Door thickness: 19–25 mm (3/4"–31/32")
- > Three-way door adjustment
- > Pre-mounted running system allows for minimal installation time
- > Integrated soft opening and soft closing to prevent door slam
- > Doors slide smoothly and quietly, and sit flush when in the closed position

→ Complete Set For Base Cabinets

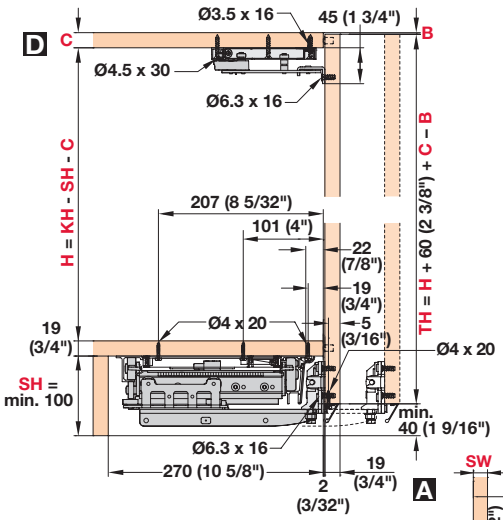

For internal cabinet width	Item No.
1200–1399 (3' 11 1/4"–4' 7 1/16")	406.02.060
1400–1599 (4' 7 1/8"–5' 2 15/16")	406.02.061
1600–1799 (5' 3"–5' 10 13/16")	406.02.063
1800–1999 (5' 10 7/8"–6' 6 11/16")	406.02.064
2000–2199 (6' 6 3/4"–7' 2 9/16")	406.02.065
2200–2400 (7' 2 5/8"–7' 10 1/2")	406.02.066

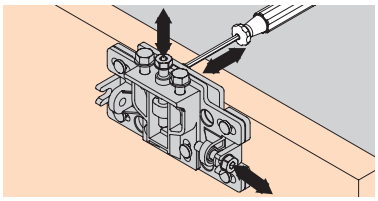

Reference	
Door width	TB
Middle panel thickness	MW
Internal cabinet width	KIM
Cabinet height	KH
Side panel thickness	SW
External cabinet width	KAM
Door recess side panel	A
Door recess top panel	B
Top panel thickness	C
Door height	TH
Height	H
Base height	SH
Fascia location	TBL
Double guide track	DFS

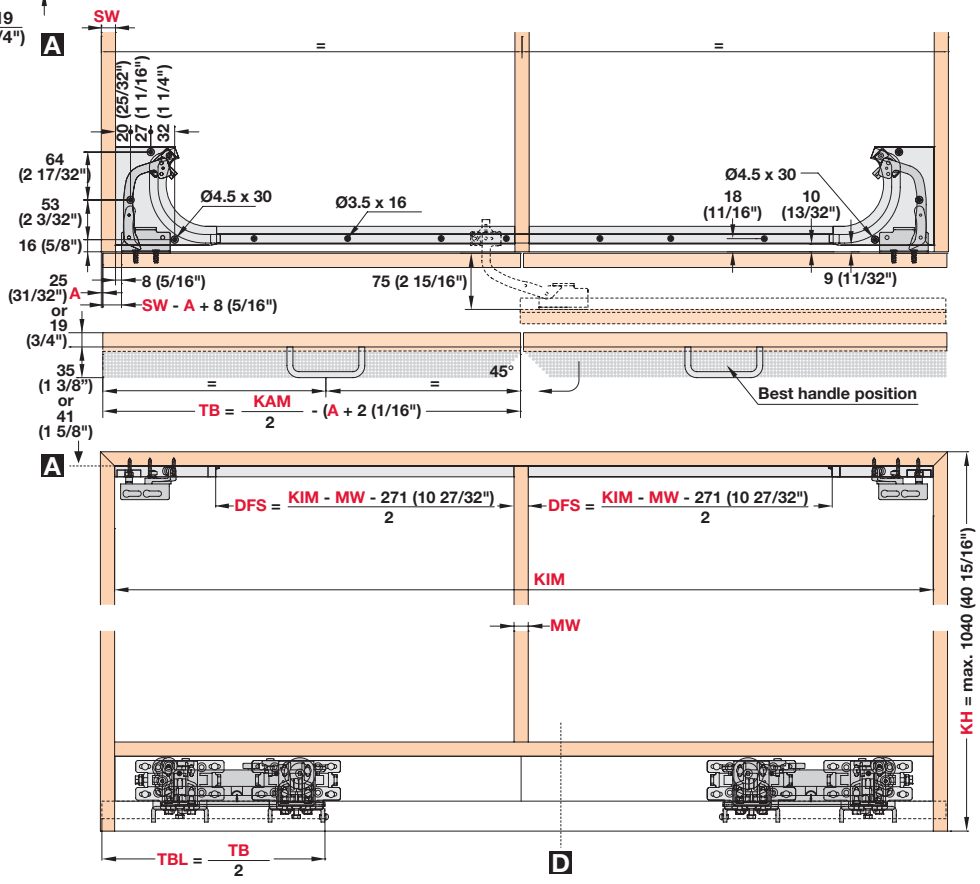

Dimensional data not binding. Dimensions in mm, inches are approximate. We reserve the right to alter specifications without notice.

HAWA Frontino 40 FB

> Door weight: max. 40 kg (88 lbs.)
> Door height: max. 2380 mm (93 11/16")
> Door width: 587–1197 mm (23 1/8"–47 1/8")
> Door thickness: 19 mm (3/4")
> Handle height: max. 30 mm (1 3/16")
> Doors slide smoothly and quietly and sit flush when closed
> Integrated soft close prevents slam

Note
Both doors must have the same dimensions. Door width in the order table is with one side.

Version		Cabinet width	Door width	Fitting set	Track set
For 2 sliding doors		Ⓢ 1200–1799 (47 1/4"–70 13/16")	594–893 (23 3/8"–35 3/16")	406.02.032	406.02.613
		Ⓜ 1800–2199 (70 7/8"–86 9/16")	894–1093 (35 3/16"–43 1/16")	406.02.033	406.02.614
		Ⓛ 2200–2400 (86 5/8"–94 1/2")	1094–1194 (43 1/16"–47")	406.02.034	406.02.615

Installation and drilling guide (top)

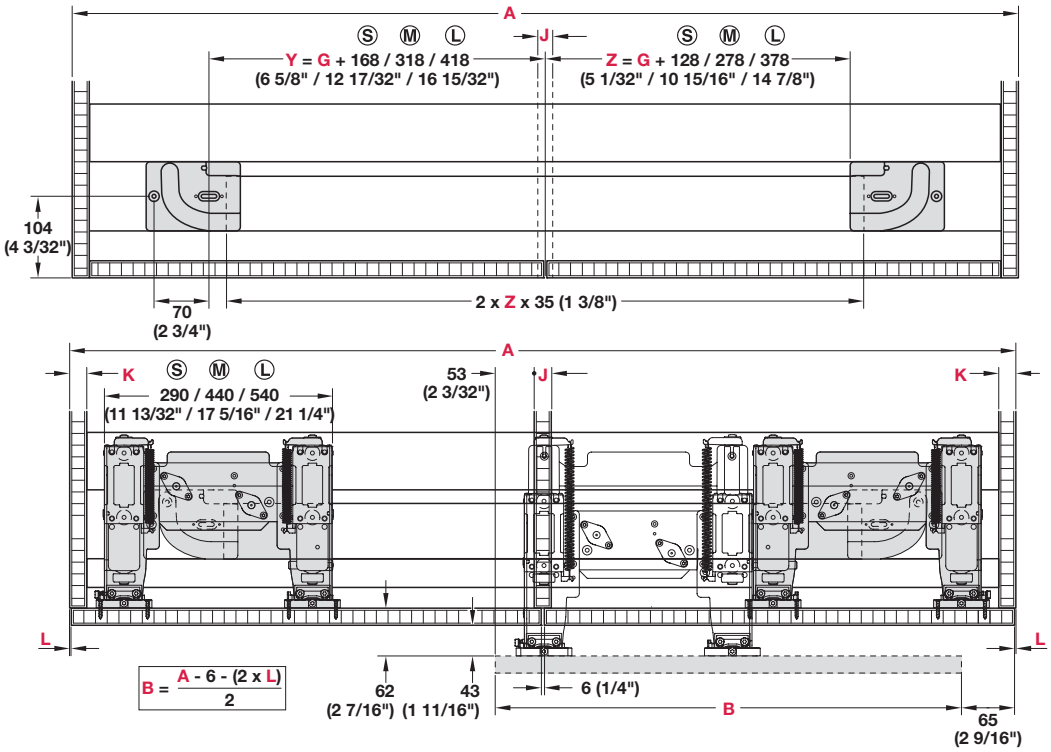

Reference	
Cabinet width	A
Door width	B
Door height	C
Drilling distance, drive to center front	G
Height	H
Side panel thickness	K
Cabinet height	KH
Door recess (3 mm)	L
Base height	M
Drilling position of radial cam	Y
Edge position of radial cam	Z

Dimensional data not binding. Dimensions in mm, inches are approximate. We reserve the right to alter specifications without notice.

HAWA Frontino 40 FB

Installation and drilling guide (bottom)

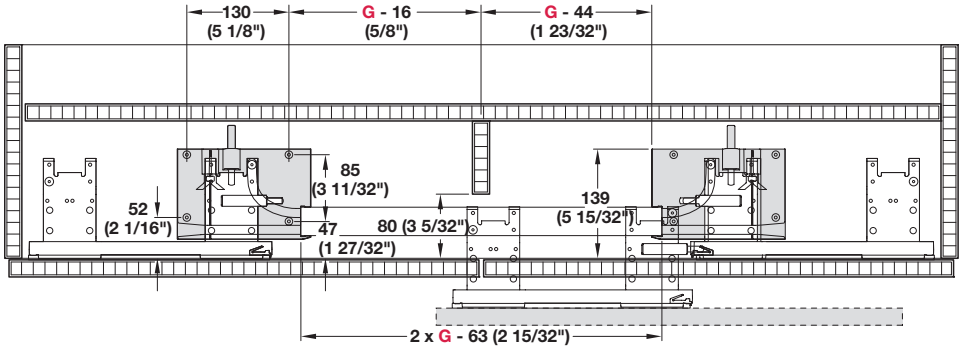

→ Installation Dimensions

Right section, track without drive

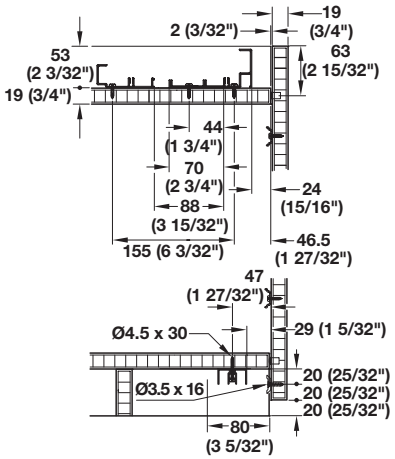

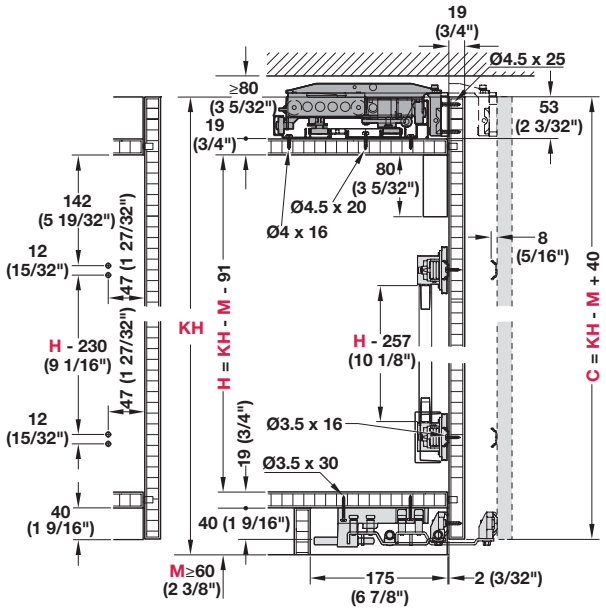

Drilling pattern

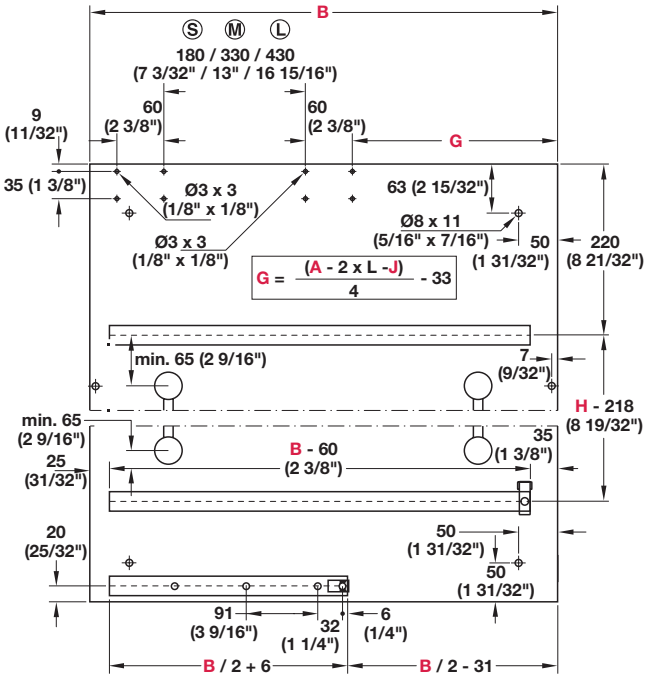

Dimensional data not binding. Dimensions in mm, inches are approximate. We reserve the right to alter specifications without notice.

Finetta F-Flush51 10A for Upper Cabinets

> Cabinet height: max. 800 mm (31 1/2")
> Door weight: max. 10 kg (22 lbs.)
> For internal cabinet widths: 860–2400 mm (33 7/8–94 1/2")
> Door width: 450–1200 mm (17 11/16"–47 1/4")
> Door thickness: 16–30 mm (5/8"–1 3/16")
> Maximum door thickness including handle: 40 mm (1 9/16")
> Adjustment: Vertical: ±5 mm (3/16"); Horizontal: ±2.4 mm (1/8")
> Front side adjustment: ±2 mm (3/32")
> Maximum overlay: 25 mm (1")
> Soft closing and opening

→ Running Gear and Track For Upper Cabinets

Running Gear - For internal cabinet width	Item No.
860–987 (33 7/8"–38 7/8")	406.11.240
988–1115 (38 7/8"–43 7/8")	406.11.241
1116–1371 (43 15/16"–54")	406.11.242
1372–1627 (54"–64 1/16")	406.11.243
1628–1883 (64 1/8"–74 1/8")	406.11.244
1884–2139 (74 3/16"–84 3/16")	406.11.245
2140–2400 (84 1/4"–94 1/2")	406.11.246

Track - For internal cabinet width	Item No.
860–1627 (33 7/8"–64 1/16")	406.11.670
1628–2400 (64 1/8"–94 1/2")	406.11.671

Dimensional data not binding. Dimensions in mm, inches are approximate. We reserve the right to alter specifications without notice.

→ Finetta F-Flush51 10A for Upper Cabinets

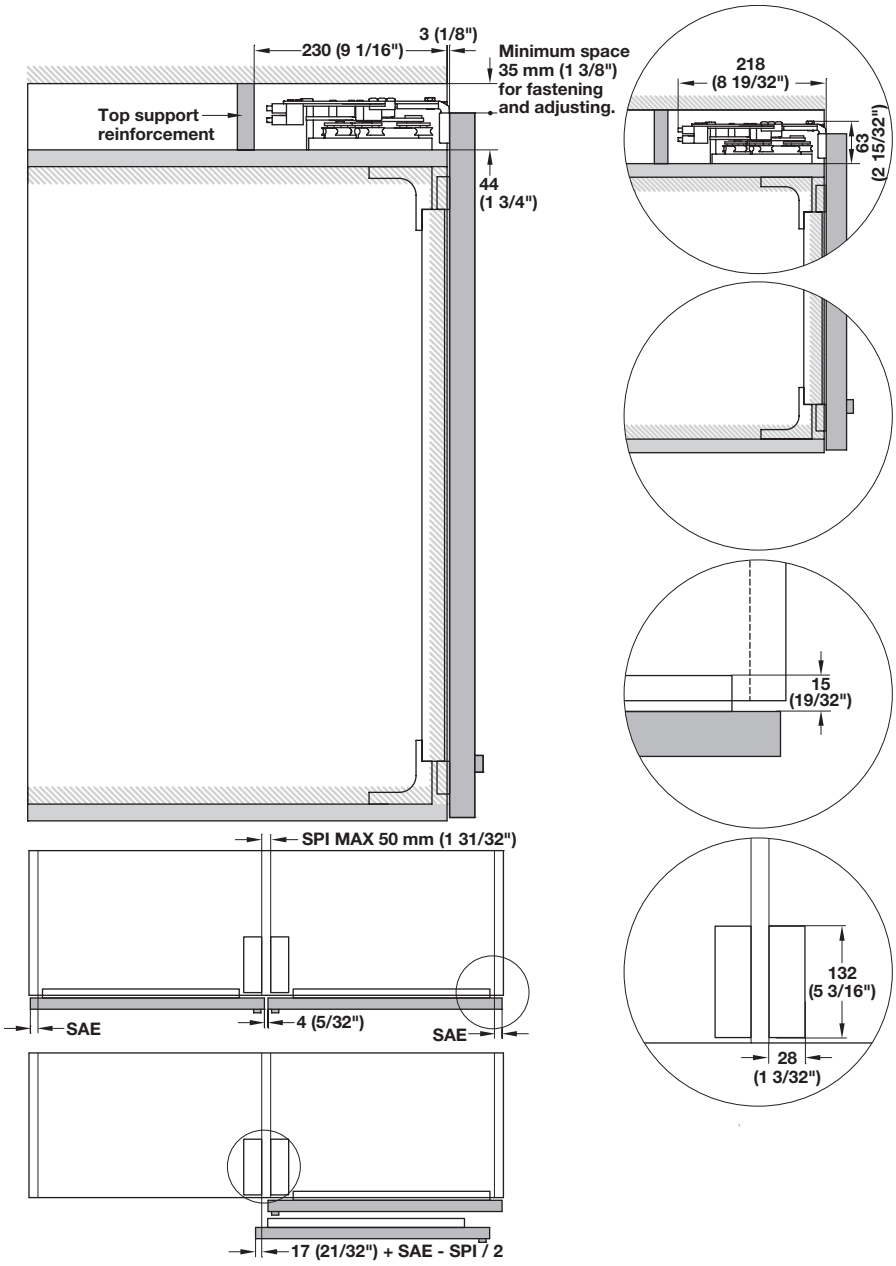

The cabinet has to be constructed so that the top panel of the wall unit is sufficiently rigid to prevent it from bending. For this reason, some reinforcement is always recommended.

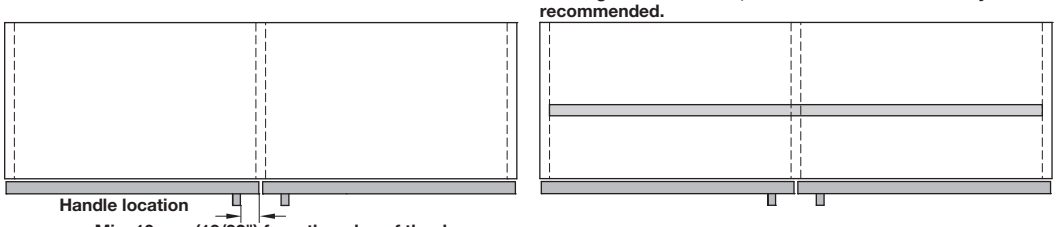

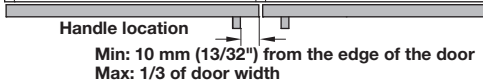

Dimensional data not binding. Dimensions in mm, inches are approximate. We reserve the right to alter specifications without notice.

Finetta F-Flush51 10A for Base Cabinets

> Cabinet height: max. 800 mm (31 1/2")
> Door weight: max. 10 kg (22 lbs.)
> For internal cabinet widths: 860–2400 mm (33 7/8"–94 1/2")
> Door width: 450–1200 mm (17 11/16"–47 1/4")
> Door thickness: 16–30 mm (5/8"–1 3/16")
> Door thickness including handle: max. 40 mm (1 9/16")
> Adjustment: Vertical: ±5 mm (3/16"); Horizontal: ±2.4 mm (1/8")
> Front side adjustment: ±2.5 mm (1/8")
> Maximum overlay: 25 mm (1")
> Soft closing and opening

→ Running Gear and Track for Base Cabinets

Running Gear - For internal cabinet width	Item No.
860–987 (33 7/8"–38 7/8")	406.11.240
988–1115 (38 7/8"–43 7/8")	406.11.241
1116–1371 (43 15/16"–54")	406.11.242
1372–1627 (54"–64 1/16")	406.11.243
1628–1883 (64 1/8"–74 1/8")	406.11.244
1884–2139 (74 3/16"–84 3/16")	406.11.245
2140–2400 (84 1/4"–94 1/2")	406.11.246

Track - For internal cabinet width	Item No.
860–1627 (33 7/8"–64 1/16")	406.11.650
1628–2400 (64 1/8"–94 1/2")	406.11.651

Dimensional data not binding. Dimensions in mm, inches are approximate. We reserve the right to alter specifications without notice.

→ Finetta F-Flush51 10A for Base Cabinets

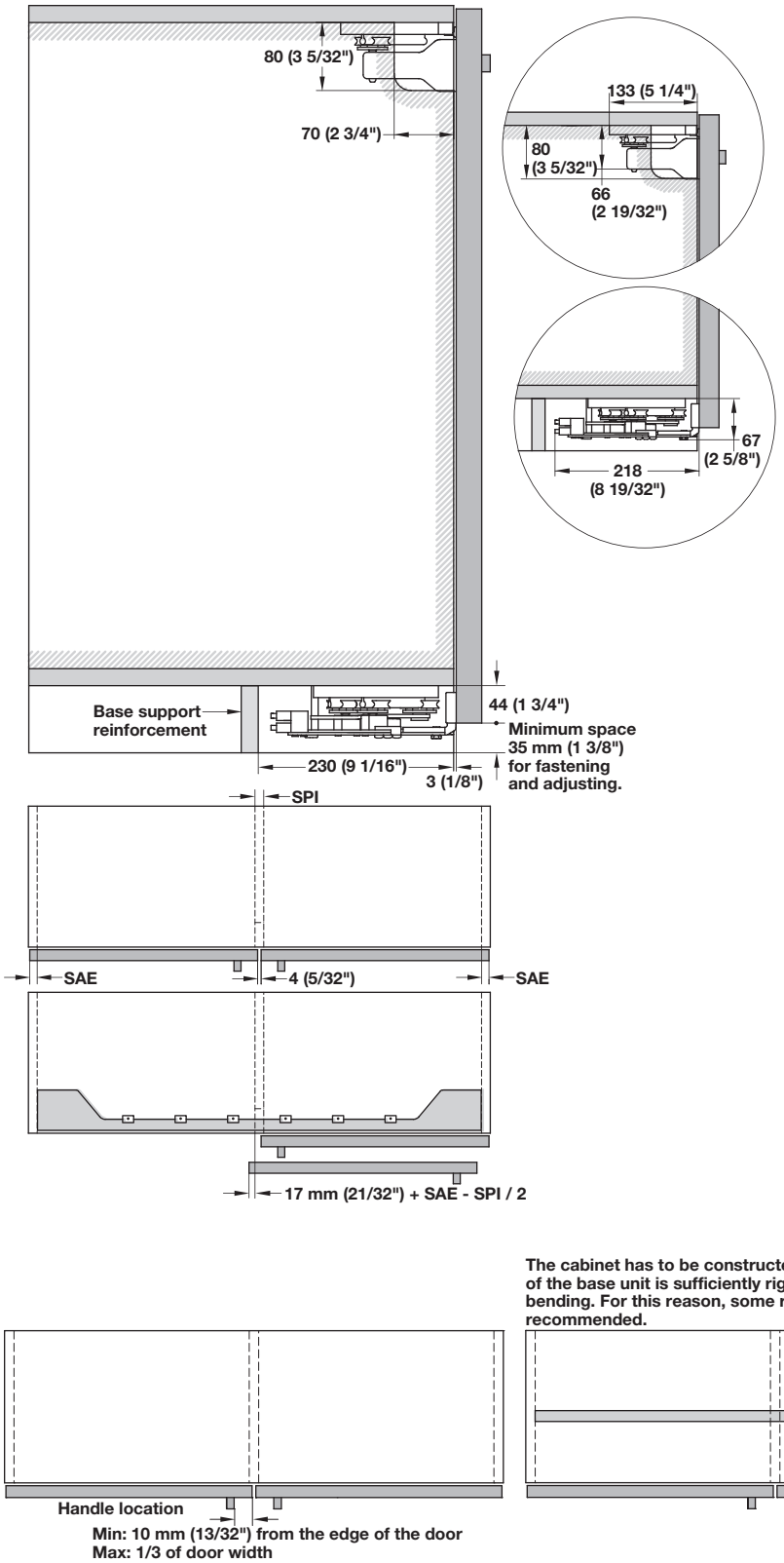

The cabinet has to be constructed so that the bottom panel of the base unit is sufficiently rigid to prevent it from bending. For this reason, some reinforcement is always recommended.

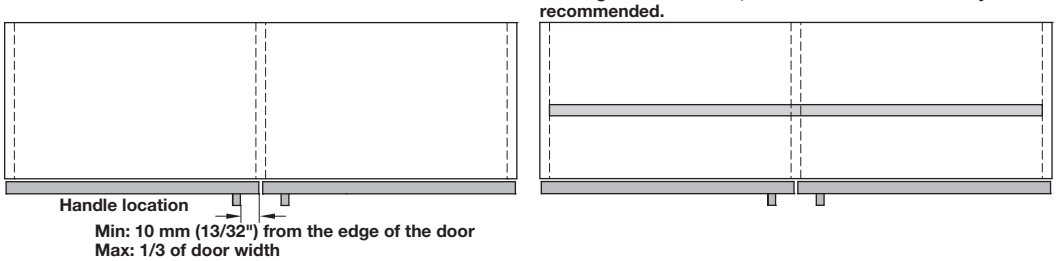

Handle location

Min: 10 mm (13/32") from the edge of the door
Max: 1/3 of door width

Dimensional data not binding. Dimensions in mm, inches are approximate. We reserve the right to alter specifications without notice.

Finetta F-Flush52 20A for Upper Cabinets

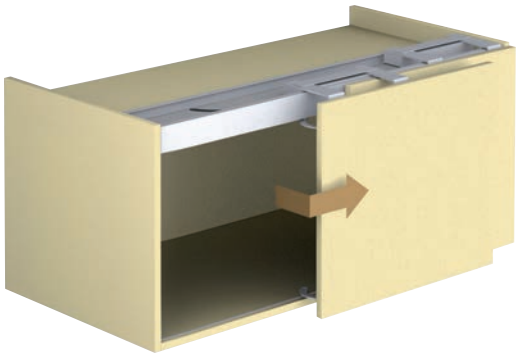

> Door weight: max. 20 kg (44 lbs.)
> Door height: max. 1200 mm (47 1/4")
> Door width: min. 600 mm (23 5/8"); max. 1500 mm (59 1/16")
> Door thickness: min. 19 mm (3/4"); max. 30 mm (1 3/16")
> Door thickness including handle: max. 45 mm (1 3/4")
> Depth of fitting without door: min. 185 mm (7 9/32")
> Height adjustment with hexagon head screw
> For 2 doors, with soft close
> Symmetrical door arrangement

→ Complete Set

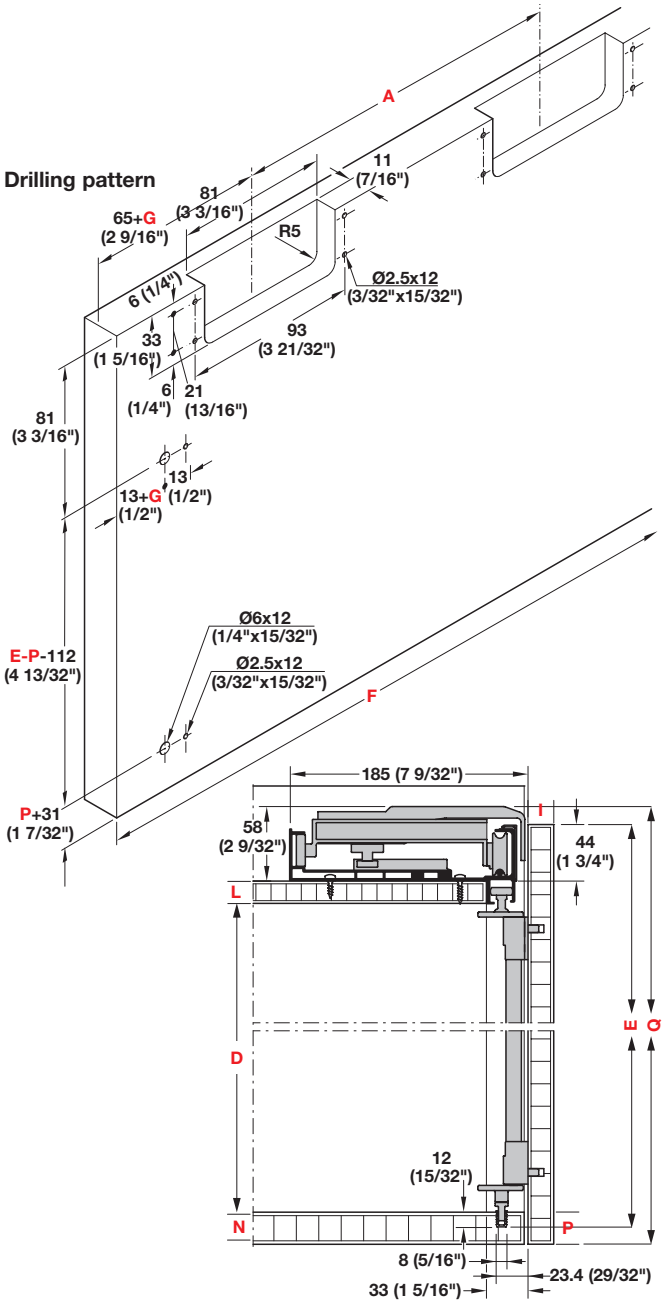

For internal cabinet width	A	B	Item No.
1162 (45 3/4")	205.5 (8 1/16")	579 (22 13/16")	406.11.221
1762 (69 3/8")	355.5 (14")	879 (34 5/8")	406.11.224
2362 (93")	505.5 (19 7/8")	1179 (46 7/16")	406.11.227

Supplied With
Mounting hardware

Note
Lead times may vary depending on item.

Reference	
Total width	C
Inner height	D
Door height	E
Door width B + G	F
Door overlay at side panel; Minimum: -3 mm (1/8")*; Maximum: 48 mm (1 7/8"); *For inset doors	G
Door thickness	I
Distance from handle to outer edge of door	K
Top panel thickness	L
Side panel thickness	M
Base panel thickness	N
Center panel thickness	O
Door overlay at base panel	P
Total height	Q

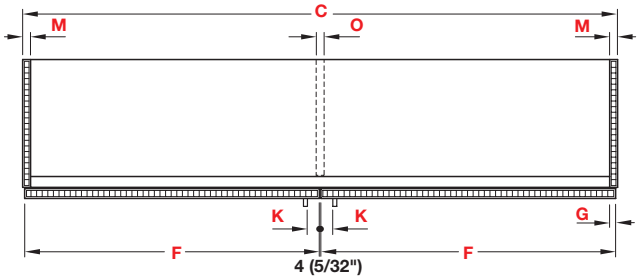

Door offset = 39 + G – O/2

Dimensional data not binding. Dimensions in mm, inches are approximate. We reserve the right to alter specifications without notice.

Finetta F-Flush52 20B for Base Cabinets

> Door weight: max. 20 kg (44 lbs.)
> Door height: max. 1200 mm (47 1/4")
> Door width: min. 600 mm (23 5/8"); max. 1500 mm (59")
> Door thickness: min. 19 mm (3/4"); max. 30 mm (1 3/16")
> Door thickness including handle: max. 45 mm (1 3/4")
> Depth: Fitting without door: min. 185 mm (7 9/32")
> Height adjustment with hexagon head screw
> For 2 doors, with soft close
> Symmetrical door arrangement

→ Complete Set

Drilling pattern

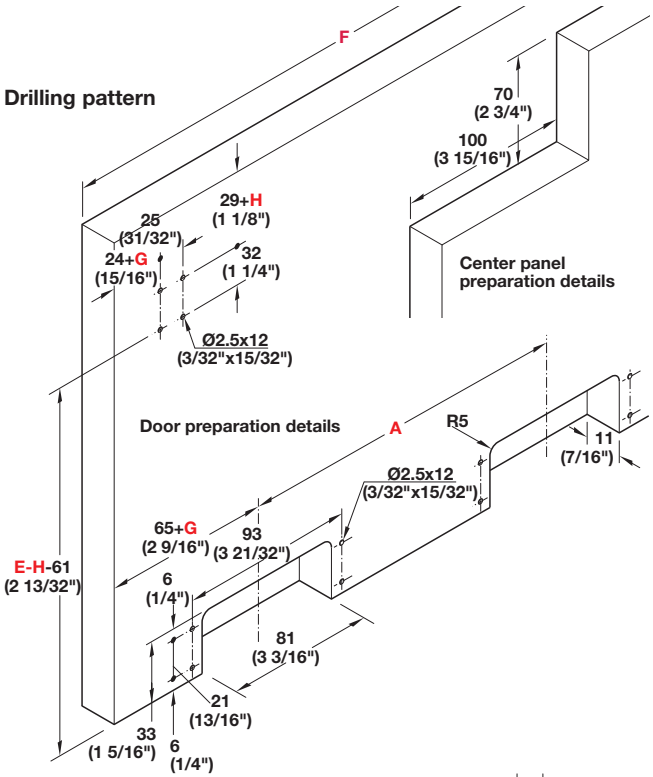

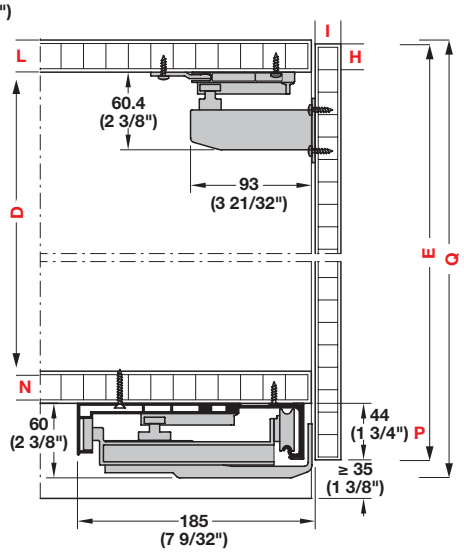

For internal cabinet width	A	B	Item No.
1162 (45 3/4")	194.5 (7 11/16")	579 (22 13/16")	406.11.201
1362 (53 5/8")	244.5 (9 5/8")	679 (26 3/4")	406.11.202
1562 (61 1/2")	294.5 (11 5/8")	779 (30 11/16")	406.11.203
1762 (69 3/8")	344.5 (13 9/16")	879 (34 5/8")	406.11.204
1962 (77 1/4")	394.5 (15 9/16")	979 (38 9/16")	406.11.205
2162 (85 1/8")	444.5 (17 1/2")	1079 (42 1/2")	406.11.206
2362 (93")	494.5 (19 7/16")	1179 (46 7/16")	406.11.207

Supplied With
Mounting hardware

Note
Lead times may vary depending on item.

Reference	
Total width	C
Inner height	D
Door height	E
Door width B + G	F
Door overlay at side panel; Minimum: -3 mm (1/8")*; Maximum: 48 mm (1 7/8"); *For inset doors	G
Overlay of top panel	H
Door thickness	I
Distance from handle to outer edge of door	K
Top panel thickness	L
Side panel thickness	M
Base panel thickness	N
Center panel thickness	O
Door overlay at base panel	P
Total height	Q

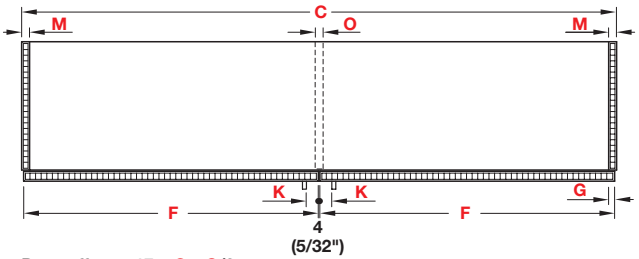

Door offset = 17 + G – O/2

Dimensional data not binding. Dimensions in mm, inches are approximate. We reserve the right to alter specifications without notice.

Finetta F-Flush53 50A

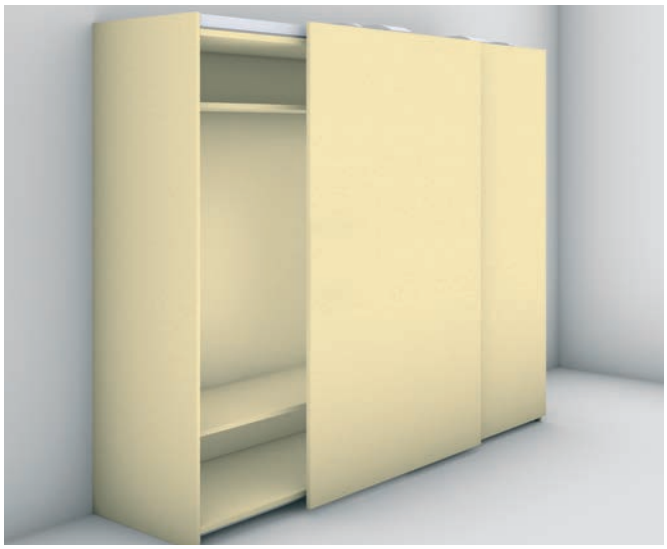

> Door weight: max. 50 kg (110 lbs.)
> Door width: min. 600 mm (23 5/8"); max. 2000 mm (78 3/4")
> Door thickness: min. 19 mm (3/4"); max. 30 mm (1 3/16")
> Thickness of door including handle: max. 45 mm (1 3/4")
> Height adjustment with hexagon head screw
> For 2 doors with soft close
> Symmetrical door arrangement
> Material: Aluminum

→ Complete Set

Recess mounted adjusters

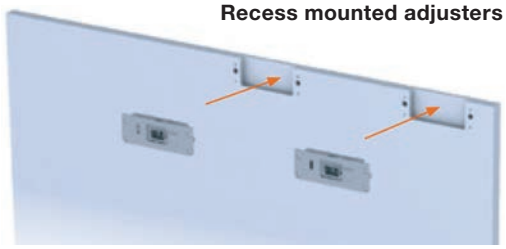

Surface mounted adjusters

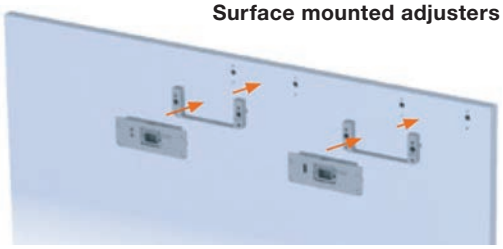

For internal cabinet width	Track length	Max door height	A	B	C	D	Item No.
1200–1299 (47 1/4"–51 1/8")	1199 (47 3/16")	2400 (94 1/2")	344 (13 9/16")	179 (7 1/16")	310.4 (12 1/4")	101.6 (4")	406.11.370
1300–1399 (51 3/16"–55 1/16")	1299 (51 1/8")	2400 (94 1/2")	369 (14 1/2")	204 (8 1/16")	335.4 (13 3/16")	126.6 (5")	406.11.371
1400–1499 (55 1/8"–59")	1399 (55 1/16")	2400 (94 1/2")	394 (15 1/2")	204 (8 1/16")	360.4 (14 3/16")	151.6 (5 15/16")	406.11.372
1500–1599 (59 1/16"–62 15/16")	1499 (59")	2400 (94 1/2")	419 (16 1/2")	254 (10")	385.4 (15 3/16")	176.6 (6 15/16")	406.11.373
1600–1799 (63"–70 13/16")	1599 (62 15/16")	2700 (106 5/16")	444 (17 1/2")	254 (10")	410.4 (16 3/16")	176.6 (6 15/16")	406.11.374
1800–1999 (70 7/8"–78 11/16")	1799 (70 13/16")	2700 (106 5/16")	494 (19 7/16")	304 (11 15/16")	460.4 (18 1/8")	226.6 (8 15/16")	406.11.375
2000–2199 (78 3/4"–86 9/16")	1999 (78 11/16")	3000 (118 1/8")	544 (21 7/16")	354 (13 15/16")	510.4 (20 1/8")	276.6 (10 7/8")	406.11.376
2200–2399 (86 5/8"–94 7/16")	2199 (86 9/16")	3000 (118 1/8")	594 (23 3/8")	404 (15 7/8")	560.4 (22 1/16")	326.6 (12 7/8")	406.11.377
2400–2599 (94 1/2"–102 5/16")	2399 (94 7/16")	3000 (118 1/8")	644 (25 3/8")	454 (17 7/8")	610.4 (24 1/16")	376.6 (14 13/16")	406.11.378
2600–2799 (102 3/8"–110 3/16")	2599 (102 5/16")	3000 (118 1/8")	694 (27 5/16")	504 (19 13/16")	660.4 (26")	426.6 (16 13/16")	406.11.379
2800–2999 (110 1/4"–118 1/16")	2799 (110 3/16")	3000 (118 1/8")	744 (29 5/16")	554 (21 13/16")	710.4 (27 15/16")	476.6 (18 3/4")	406.11.380

Supplied With
Mounting hardware

Note
Door overlay: Minimum: -3 mm (1/8"), for Inset doors; Maximum: 48 mm (1 7/8"); Lead times may vary depending on item.

Dimensional data not binding. Dimensions in mm, inches are approximate. We reserve the right to alter specifications without notice.

Finetta F-Flush53 50A

Surface mounted adjusters

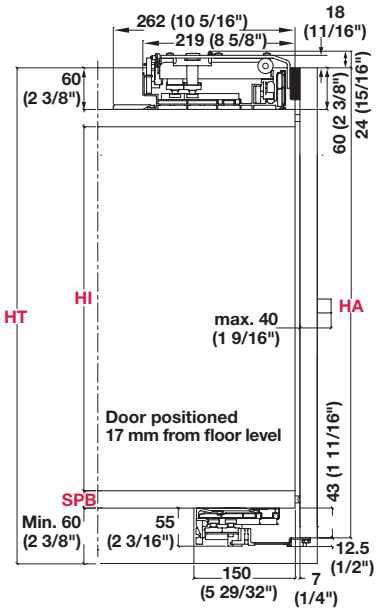

Recess mounted adjusters

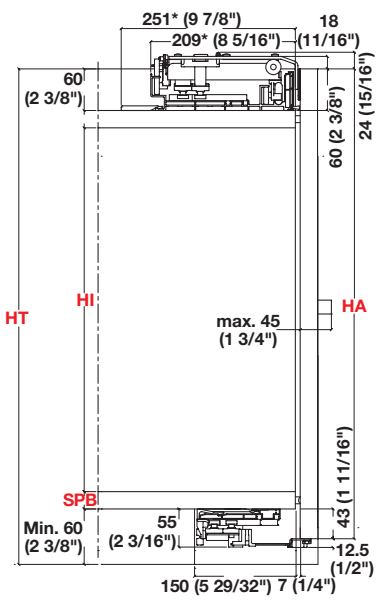

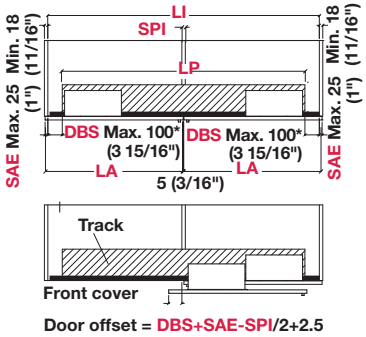

Door offset = DBS+SAE-SPI/2+2.5

Reference	
Cabinet internal width (ID)	**LI**
Door width	**LA**
Inside cabinet height	**HI**
Support panel thickness	**SPI**
Door overlay	**SAE**
Door height	**HA**
Total cabinet height	**HT**
Space between track and side panel	**DBS**
Track length	**LP**

Note

The M 50+ can be installed on a cabinet which may exceed the dimensions of the track itself by 100 or 200 mm (3 15/16" or 7 7/8").
In this case, consider a smaller door opening with the following formula: DBS+SAE-SPI/2+2.5
Your cabinet may exceed the length of the mechanism by the above dimension which will result in the door's stopping short of closing on one another by a length indicated in the formula. Refer to the door offset equation in the top right.
*DBS (Space between the track and the side of the cabinet) maximum 50 mm (2") for mechanisms from 1199–1599 mm (47 7/32"–62 15/16").

Dimensional data not binding. Dimensions in mm, inches are approximate. We reserve the right to alter specifications without notice.

Finetta F-Flush54 70A

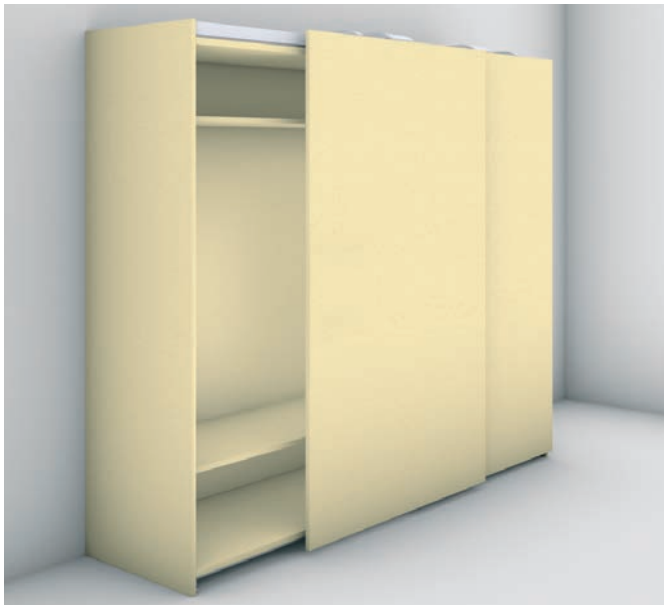

- > Door weight: max. 70 kg (154 lbs.)
- > Door height: max. 3000 mm (118 1/8")
- > Door width: min. 800 mm (31 1/2"); max. 2000 mm (78 3/4")
- > Door thickness: min. 19 mm (3/4")
- > Thickness of door including handle: max. 45 mm (1 25/32")
- > Height adjustment with hexagon head screw
- > For 2 doors, with soft close
- > Symmetrical door arrangement
- > Adjustment: Vertical: ±5 mm (3/16"); Horizontal: ±3.5 mm (1/8")

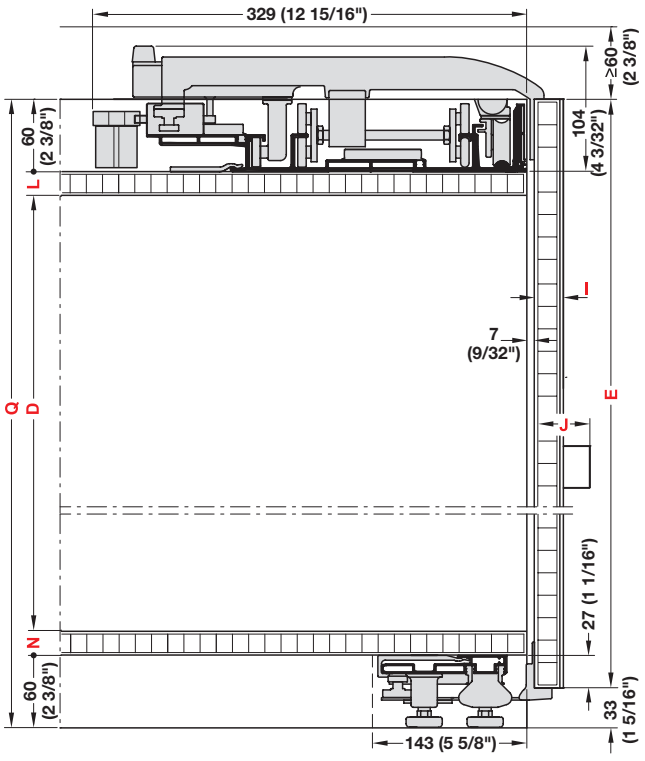

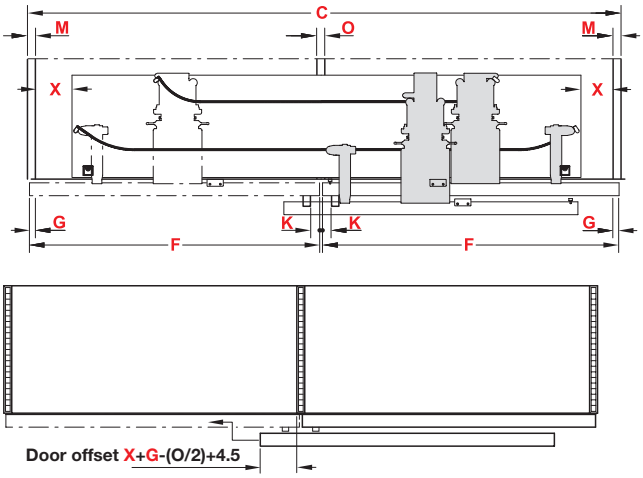

Reference	
Total width	C
Inner height	D
Door height	E
Door width	F
Door overlay at side panel; Minimum: -3 mm (1/8")* Maximum: 25 mm (1"); *For inset doors	G
Door thickness	I
Door thickness (includes handle max. 45 mm (1 25/32")	J
Distance from handle to outer edge of door	K
Top panel thickness	L
Side panel thickness	M
Base panel thickness	N
Center panel thickness	O
Total height	Q

Calculations	
Door height calculation	E = D + L + N + 60 + 27 mm (2 3/8" + 1 1/16")
Total height calculation (Q)	E + 33 mm (15/16")
Door offset calculation	X+G - (O/2) + 4.5 mm (3/16")

Dimensional data not binding. Dimensions in mm, inches are approximate. We reserve the right to alter specifications without notice.

→ Finetta F-Flush54 70A Set

For internal cabinet width	Track length	Item No.
1600–1799 (63"–70 13/16")	1599 (62 15/16")	406.11.050
1800–1999 (70 7/8"–78 11/16")	1799 (70 13/16")	406.11.051
2000–2199 (78 3/4"–86 9/16")	1999 (78 11/16")	406.11.052
2200–2399 (86 5/8"–94 7/16")	2199 (86 9/16")	406.11.053
2400–2599 (94 1/2"–102 5/16")	2399 (94 7/16")	406.11.054
2600–2799 (102 3/8"–110 3/16")	2599 (102 5/16")	406.11.055
2800–2999 (110 1/4"–118 1/16")	2799 (110 3/16")	406.11.056
3000–3199 (118 1/8"–125 15/16")	2999 (118 1/16")	406.11.057
3200–3399 (126"–133 13/16")	3199 (125 15/16")	406.11.058
3400–3599 (133 7/8"–141 11/16")	3399 (133 13/16")	406.11.059
3600–3799 (141 3/4"–149 9/16")	3599 (141 11/16")	406.11.060
3800–3999 (149 5/8"–157 7/16")	3699 (145 5/8")	406.11.061

Supplied With
Mounting hardware

Note
Lead times may vary depending on item.

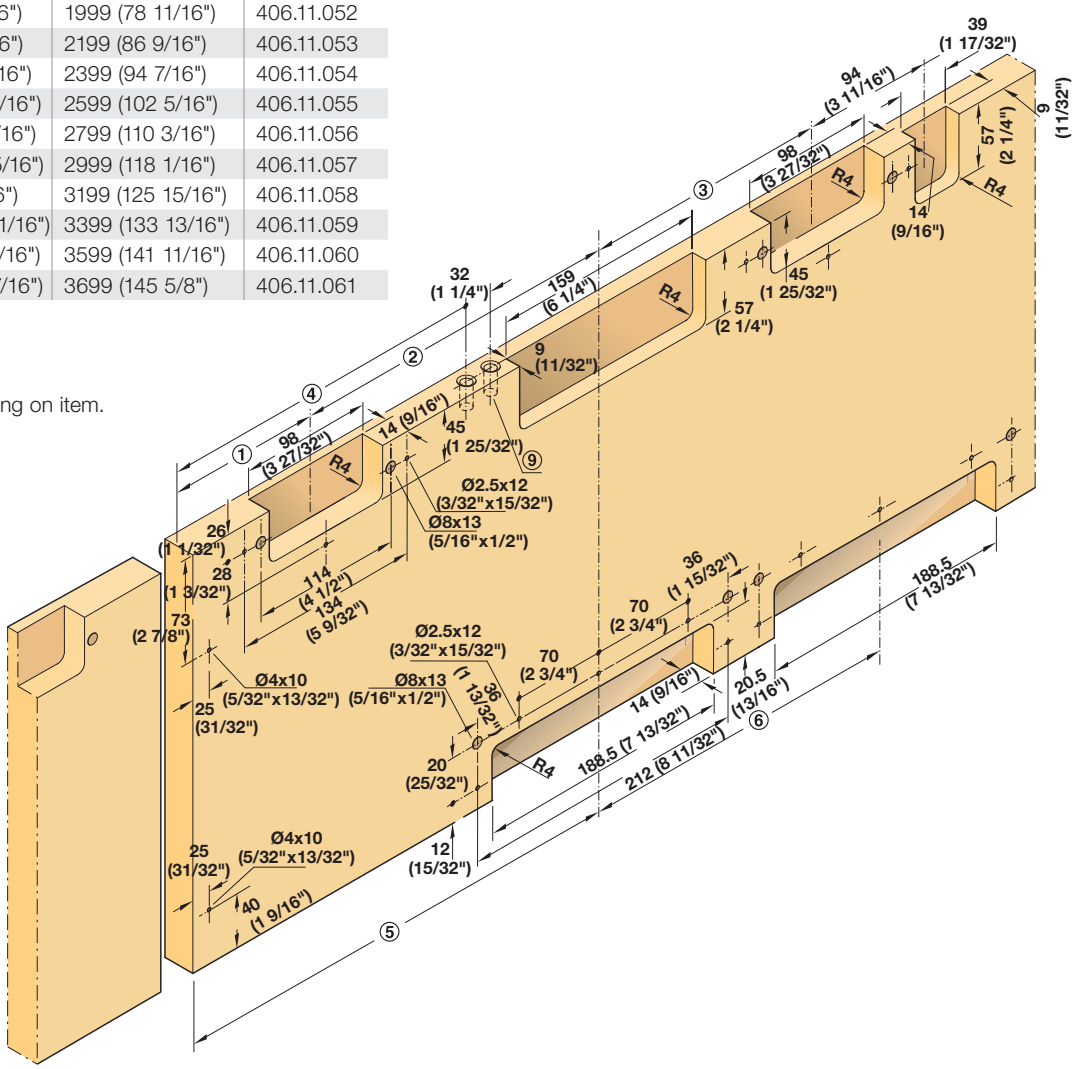

Drilling diagram for door

Note
The Slider L can be installed on a cabinet which may exceed the dimensions of the track itself by 200 mm (7 7/8"). In this case, consider a smaller door opening with the following formula:
X + G- (O/2) + 4.5.

Your cabinet may exceed the length of the mechanism by the above dimension which will result in the door's stopping short of closing on one another by a length indicated in the formula. See to the door offset equation on page **7.72**.

For internal cabinet width	1	2	3	4	5	6
1600–1799 (63"–70 13/16")	169 (6 5/8")	303 (11 15/16")	154 (6 1/16")	341 (13 7/16")	472 (18 9/16")	–
1800–1999 (70 7/8"–78 11/16")	169 (6 5/8")	353 (13 7/8")	204 (8 1/16")	391 (15 3/8")	522 (20 9/16")	–
2000–2199 (78 3/4"–86 9/16")	169 (6 5/8")	403 (15 7/8")	254 (10")	441 (17 3/8")	572 (22 1/2")	–
2200–2399 (86 5/8"–94 7/16")	169 (6 5/8")	453 (17 13/16")	304 (11 15/16")	491 (19 5/16")	622 (24 1/2")	–
2400–2599 (94 1/2"–102 5/16")	169 (6 5/8")	503 (19 13/16")	354 (13 15/16")	541 (21 3/16")	672 (26 7/16")	–
2600–2799 (102 3/8"–110 3/16")	219 (8 5/8")	503 (19 13/16")	354 (13 15/16")	591 (23 1/4")	722 (28 7/16")	425 (16 3/4")
2800–2999 (110 1/4"–118 1/16")	269 (10 9/16")	503 (19 13/16")	354 (13 15/16")	641 (25 1/4")	772 (30 3/8")	475 (18 11/16")
3000–3199 (118 1/8"–125 15/16")	319 (12 9/16")	503 (19 13/16")	354 (13 15/16")	691 (27 3/16")	822 (32 3/8")	525 (20 11/16")
3200–3399 (126"–133 13/16")	369 (14 1/2")	503 (19 13/16")	354 (13 15/16")	741 (29 3/16")	872 (34 5/16")	575 (22 5/8")
3400–3599 (133 7/8"–141 11/16")	419 (16 1/2")	503 (19 13/16")	354 (13 15/16")	791 (31 1/8")	922 (36 5/16")	625 (24 5/8")
3600–3799 (141 3/4"–149 9/16")	469 (18 7/16")	503 (19 13/16")	354 (13 15/16")	841 (33 1/8")	972 (38 1/4")	675 (26 9/16")
3800–3999 (149 5/8"–157 7/16")	519 (20 7/16")	503 (19 13/16")	354 (13 15/16")	891 (35 1/16")	1022 (40 1/4")	725 (28 9/16")

Dimensional data not binding. Dimensions in mm, inches are approximate. We reserve the right to alter specifications without notice.

Häfele Slido F-Line21 12D

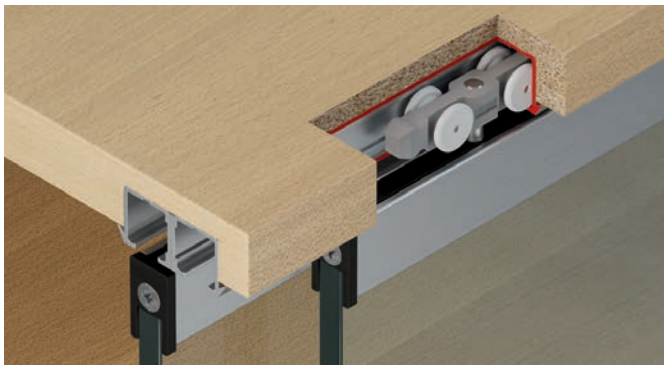

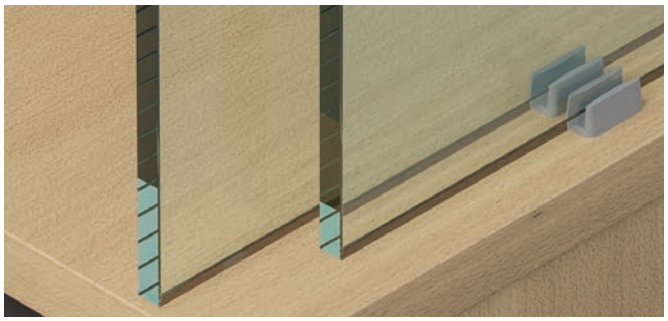

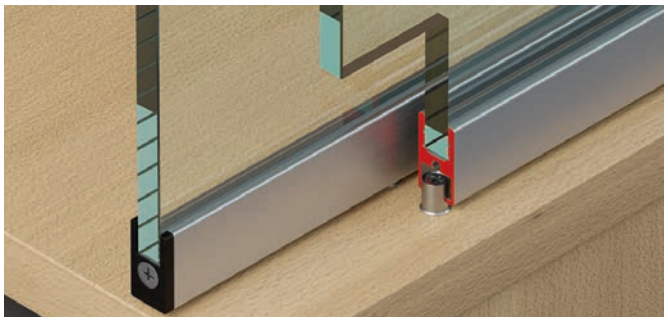

- > With two glass retaining profiles at top/bottom and concealed guide or with glass retaining profile at top and visible guide at bottom
- > Door weight: max. 12 kg (26 lbs.)
- > Door width: ≥350 mm (13 3/4") with soft closing mechanism; ≥530 mm (20 27/32") with soft closing and opening mechanism
- > Door thickness: 6–8 mm (1/4"–5/16")
- > Top clip-in door stopper or as soft closing mechanism, for sliding into running track
- > Running gear guided by friction bearing mounted roller
- > Adjustment facility: ±2 mm (3/32") on running gear using hexagonal nut
- > Glass retaining profile for glue mounting, running gear for sliding in from the front edge and screwing to the top glass retaining profile

Installation dimensions

With glass retaining profile at top

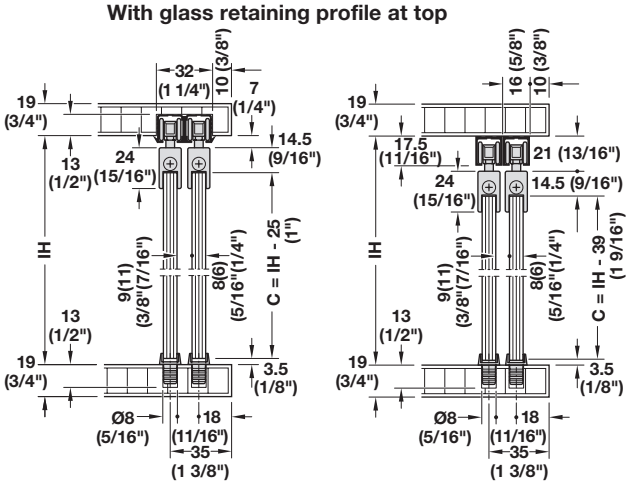

For press fitting | For screw mounting

With glass retaining profile at top and bottom

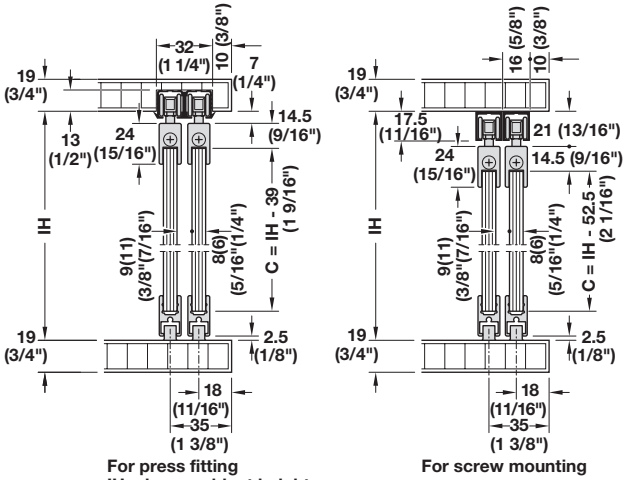

For press fitting
IH = inner cabinet height
C = door height

For screw mounting

Door width B

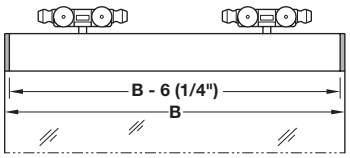

Door follower position

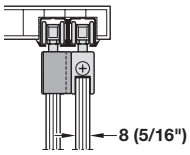

Running track versions

Single running track for press fitting

Double running track for press fitting

Single running track for screw mounting

Door overlap

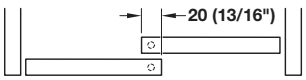

Cabinet with 2 doors

Cabinet with 3 doors

Dimensional data not binding. Dimensions in mm, inches are approximate. We reserve the right to alter specifications without notice.

→ Häfele Slido F-Line21 12D Set

	Version	Supplied With	Item No.
For 1 door	With clip-in door stopper	2 running gears 2 door stoppers with clip-in door stopper 1 set of guides, cover caps and mounting aid	402.33.032
	With soft closing mechanism on both sides, 12 kg (26 lbs.)	2 running gears with soft closing mechanism 2 door stoppers for soft closing mechanism 1 set of guides, cover caps and mounting aid	402.33.037
For 2 doors	With clip-in door stopper	4 running gears 4 door stoppers with clip-in door stopper 1 door follower 2 sets of guides, cover caps and mounting aid	402.33.034
	With soft closing mechanism on one side, 12 kg (26 lbs.)	4 running gears (2 with soft closing mechanism) 4 door stoppers (2 with clip-in door stopper, 2 for soft closing mechanism) 1 door follower 2 sets of guides, cover caps and mounting aid	402.33.038
	With soft closing mechanism on both sides, 12 kg (26 lbs.)	4 running gears with soft closing mechanism 4 door stoppers for soft closing mechanism 1 door follower 2 sets of guides, cover caps and mounting aid	402.33.039

Supplied With
1 set

Note
Please order running and guide tracks separately. For cabinets with more than 3 doors, please order following sets: 1 set for 1 door and 1 set for 2 doors. The pitch length of the running gears must be min. 245 mm (9 5/8") with soft closing mechanism on one side and min. 425 mm (16 3/4") with soft closing mechanism on both sides.

→ Tracks and Accessories

Description		Min. cabinet top thickness	Material	Finish	Length	Item No.
Single top running track, for press fitting and glue mounting into groove 16 mm (5/8") or for screw mounting with countersunk head screws 3 mm (1/8")		Glue mounting: Min. 19 (3/4"); Screw mounting: Min. 30 (1 3/16")	Aluminum	mill, visible areas grooved	2.5 m (8' 2 7/16")	402.33.642
					3.5 m (11' 5 13/16")	402.33.643
Double top running track, for press fitting and glue mounting into groove 16 mm (5/8") or for screw mounting with countersunk head screws Ø3.5 mm (1/8")	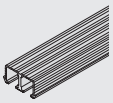	Glue mounting: Min. 19 (3/4"); Screw mounting: Min. 30 (1 3/16")	Aluminum	mill, visible areas grooved	2.5 m (8' 2 7/16")	402.33.600
					3.5 m (11' 5 13/16")	402.33.601
Single top running track, for screw mounting with countersunk head screws Ø3.5 mm (1/8")		–	Aluminum	silver colored anodized	2.5 m (8' 2 7/16")	402.30.642
					3.5 m (11' 5 13/16")	402.30.643
Glass door profile, for top and bottom	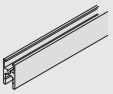	–	Aluminum	Front: silver colored, anodized Back: brushed	2.5 m (8' 2 7/16")	402.33.700
					3.5 m (11' 5 13/16")	402.33.701

Dimensional data not binding. Dimensions in mm, inches are approximate. We reserve the right to alter specifications without notice.

Häfele Slido F-Line21 20D

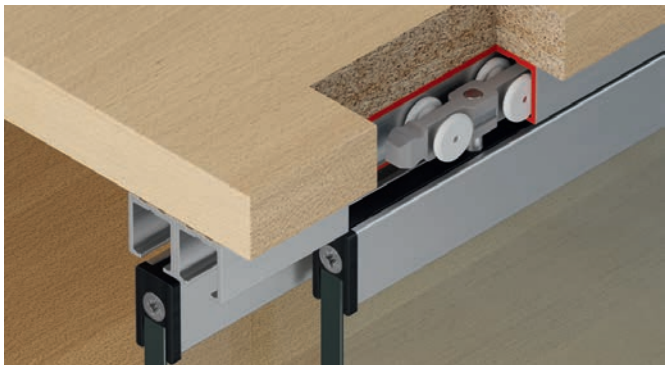

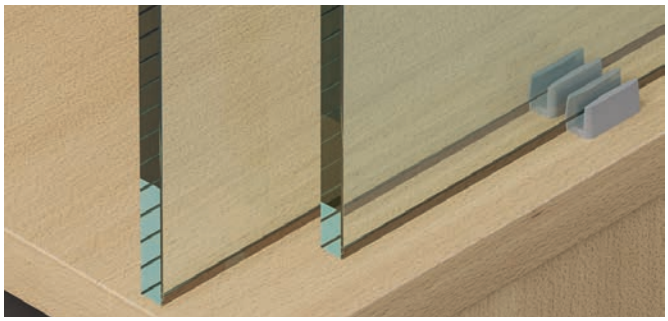

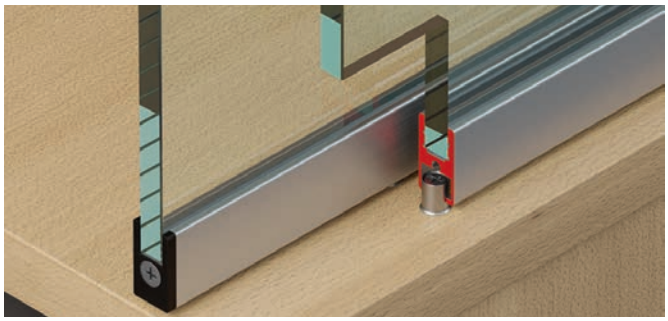

- > With two glass retaining profiles at top/bottom and concealed guide or with glass retaining profile at top and visible guide at bottom
- > Door weight: max. 20 kg (44 lbs.)
- > Door width: >350 mm (13 3/4") with soft closing mechanism; ≥530 mm (20 27/32") with soft closing and opening mechanism
- > Door thickness: 6–8 mm (1/4"–5/16")
- > Top clip-in door stopper or as soft closing mechanism, for sliding into running track
- > Running gear guided by friction bearing mounted roller
- > Adjustment facility: ±2 mm (3/32") on running gear using hexagonal nut
- > Glass retaining profile for glue mounting, running gear for sliding in from the front edge and screwing to the top glass retaining profile

Installation dimensions

With glass retaining profile at top

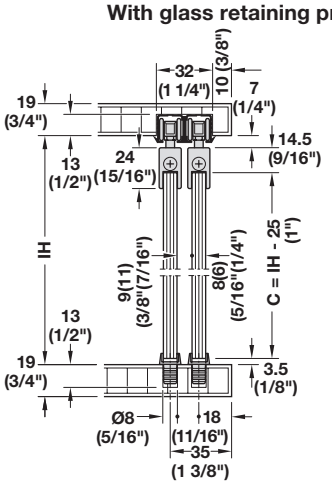

For press fitting

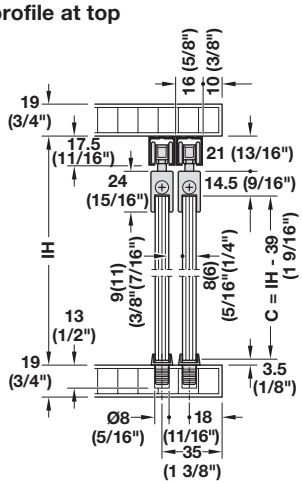

For screw mounting

With glass retaining profile at top and bottom

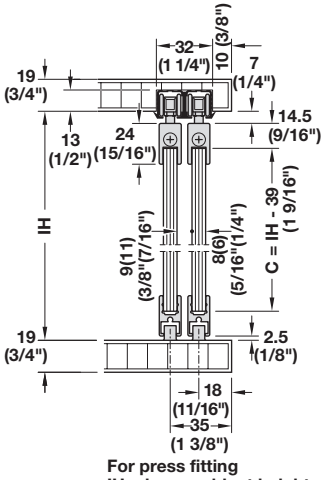

For press fitting
IH = inner cabinet height
C = door height

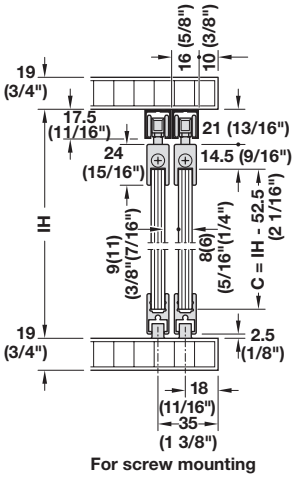

For screw mounting

Door width B

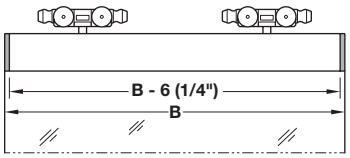

Door follower position

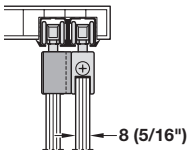

Door overlap

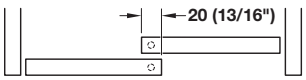

Cabinet with 2 doors

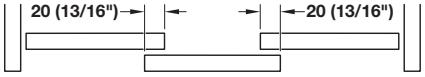

Cabinet with 3 doors

Running track versions

Single running track for press fitting

Double running track for press fitting

Single running track for screw mounting

Dimensional data not binding. Dimensions in mm, inches are approximate. We reserve the right to alter specifications without notice.

→ Häfele Slido F-Line21 20D Set

	Version	Supplied With	Item No.
For 1 door	With clip-in door stopper	2 running gears 2 door stoppers with clip-in door stopper 1 set of guides, cover caps and mounting aid	402.33.032
	With soft closing mechanism on both sides, 20 kg (44 lbs.)	2 running gears with soft closing mechanism 2 door stoppers for soft closing mechanism 1 set of guides, cover caps and mounting aid	402.33.033
For 2 doors	With clip-in door stopper	4 running gears 4 door stoppers with clip-in door stopper 1 door follower 2 sets of guides, cover caps and mounting aid	402.33.034
	With soft closing mechanism on one side, 20 kg (44 lbs.)	4 running gears (2 with soft closing mechanism) 4 door stoppers (2 with clip-in door stopper, 2 for soft closing mechanism) 1 door follower 2 sets of guides, cover caps and mounting aid	402.33.035
	With soft closing mechanism on both sides, 20 kg (44 lbs.)	4 running gears with soft closing mechanism 4 door stoppers for soft closing mechanism 1 door follower 2 sets of guides, cover caps and mounting aid	402.33.036

Supplied With
1 set

Note
Please order running and guide tracks separately. For cabinets with more than 3 doors, please order following sets: 1 set for 1 door and 1 set for 2 doors. The pitch length of the running gears must be min. 245 mm (9 11/16") with soft closing mechanism on one side and min. 425 mm (16 3/4") with soft closing mechanism on both sides.

→ Tracks and Accessories

Description		Min. cabinet top thickness	Material	Finish	Length	Item No.
Single top running track, for press fitting and glue mounting into groove 16 mm (5/8") or for screw mounting with countersunk head screws 3 mm (1/8")		Glue mounting: Min. 19 (3/4"); Screw mounting: Min. 30 (1 3/16")	Aluminum	mill, visible areas grooved	2.5 m (8' 2 7/16")	402.33.642
					3.5 m (11' 5 13/16")	402.33.643
Double top running track, for press fitting and glue mounting into groove 16 mm (5/8") or for screw mounting with countersunk head screws Ø3.5 mm (1/8")	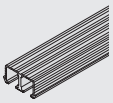	Glue mounting: Min. 19 (3/4"); Screw mounting: Min. 30 (1 3/16")	Aluminum	mill, visible areas grooved	2.5 m (8' 2 7/16")	402.33.600
					3.5 m (11' 5 13/16")	402.33.601
Single top running track, for screw mounting with countersunk head screws Ø3.5 mm (1/8")		–	Aluminum	silver colored anodized	2.5 m (8' 2 7/16")	402.30.642
					3.5 m (11' 5 13/16")	402.30.643
Glass door profile, for top and bottom	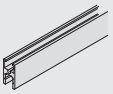	–	Aluminum	Front: silver colored, anodized Back: brushed	2.5 m (8' 2 7/16")	402.33.700
					3.5 m (11' 5 13/16")	402.33.701

Dimensional data not binding. Dimensions in mm, inches are approximate. We reserve the right to alter specifications without notice.

Häfele Slido F-Line14 25A

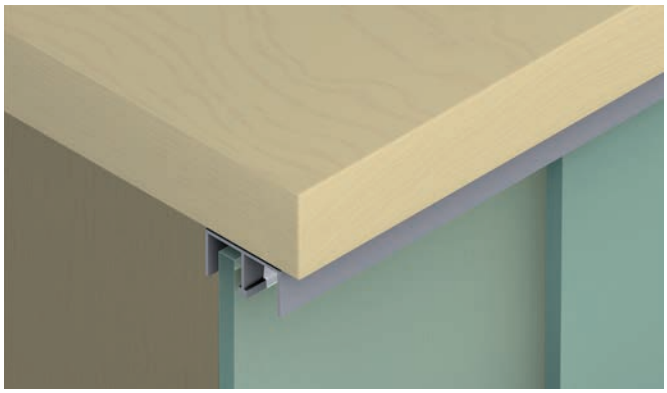

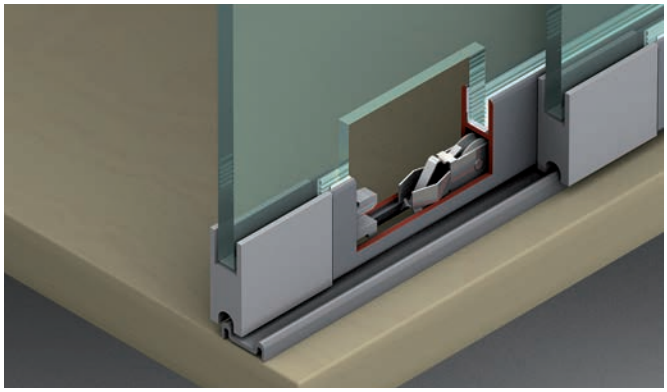

- > Door weight: max. 25 kg (55 lbs.)
- > Door height: max. 1,400 mm (4' 7 1/8")
- > Door width: min. 600 mm (1' 11 5/8")
- > Door width: max. 1,200 mm (3' 11 1/4")
- > For glass thickness: 6 mm (1/4")
- > Running gear with slide-in technology for quick and easy installation
- > Very smooth running action
- > Perfect for interior transaction windows and showcase cabinets

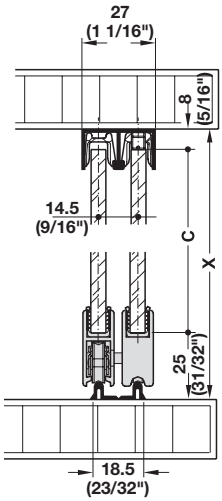

Calculations:

Glass height: C = X – (25 + 8)
(31/32" + 5/16")

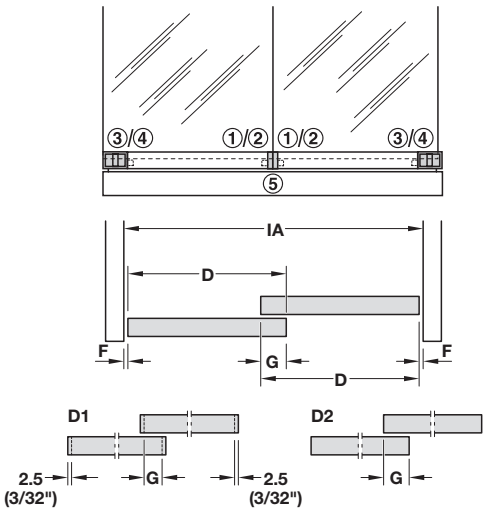

Glass width calculation D (D1 and D2):
CN = number of doors
IA = internal cabinet width
F = gap
G = door overlap

$$①, ③ \quad D1 = \frac{(CN-1)xG+IA}{CN} - 5 - (2xF)$$

$$②, ④, ⑤ \quad D2 = \frac{(CN-1)xG+IA}{CN} - (2xF)$$

① End cap

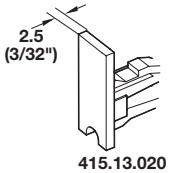

415.13.020

② End cap

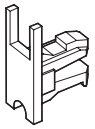

415.13.021

③ Glass profile grip

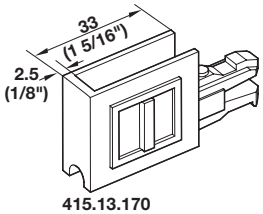

415.13.170

④ Glass profile grip

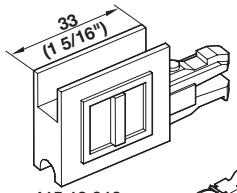

415.13.010

⑤ Lock housing and cylinder core

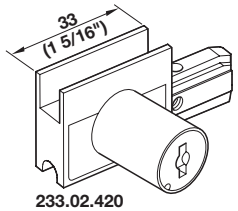

233.02.420

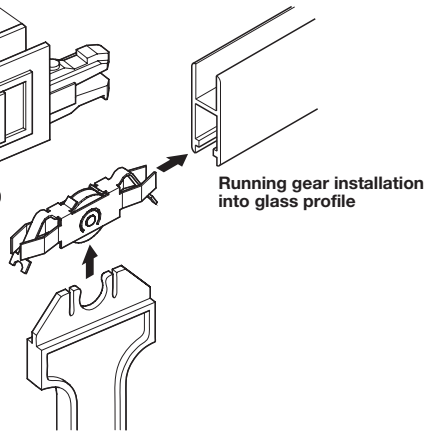

Running gear installation into glass profile

Dimensional data not binding. Dimensions in mm, inches are approximate. We reserve the right to alter specifications without notice.

→ Häfele Slido F-Line14 25A Set

	For glass thickness	Version	Material	Finish/Color	Item No.
Running gear, for sliding in and tightening	6 (1/4")	–	Steel	zinc-plated, Rollers: plastic coated, white	415.13.104
Mounting aid for running gear	6 (1/4")	–	Plastic	–	415.13.060
Anti-derailment device and clatter prevention for clipping on and screw mounting into the guide track, we recommend using 3 pcs. for each door: 1 each left/right and 1 central	6 (1/4")	–	Plastic	white translucent	415.13.050
End piece closed type, for clipping on and bonding on site	6 (1/4")	–	Plastic	matt chrome-plated	415.13.020
End piece with glass groove, for clipping on and bonding on site	6 (1/4")	–	Plastic	matt chrome-plated	415.13.021
End piece with handle, closed type, for clipping on and tightening	6 (1/4")	–	Plastic	matt chrome-plated	415.13.170
End piece with handle, with glass groove, for clipping on and tightening	6 (1/4")	–	Plastic	matt chrome-plated	415.13.010
End piece with lock and glass groove	6 (1/4")	Keyed alike	Zinc alloy	matt chrome-plated	233.02.420

→ Tracks and Accessories

Description		For glass thickness	Material	Finish/Color	Length	Item No.
Double top guide track, for screw mounting	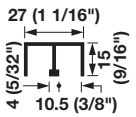	6 (1/4")	Aluminum	silver colored anodized	2.5 m (8' 2 7/16")	415.10.925
Double top guide track, for screw mounting **Note** Anti-derailment device cannot be installed.	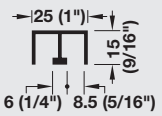	6 (1/4")	Aluminum	Outside: silver colored anodized, Inside: flocked	2.5 m (8' 2 7/16")	415.10.882
Double bottom running track, for screw mounting	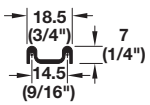	6 (1/4")	Aluminum	silver colored anodized	2.5 m (8' 2 7/16")	415.11.925
Double bottom running track, for screw mounting, suitable for use with Dialock EFL 41	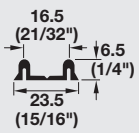	–	Aluminum	silver colored anodized	3.5 m (11' 5 13/16")	415.08.972
Runner housing profile, for mounting the running gear to the glass door	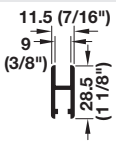	6 (1/4")	Aluminum	silver colored anodized	2.5 m (8' 2 7/16")	415.12.652
Clip-on profile for glass, for sliding into runner housing profile	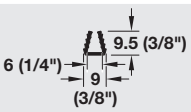	6 (1/4")	Plastic	gray	2.5 m (8' 2 7/16")	415.13.622
Dust protection profile, for glue mounting	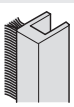	6 (1/4")	Aluminum/ Plastic	silver colored anodized	–	416.13.932

Dimensional data not binding. Dimensions in mm, inches are approximate. We reserve the right to alter specifications without notice.

HAWA Clipo 16 GPK/GPPK IF

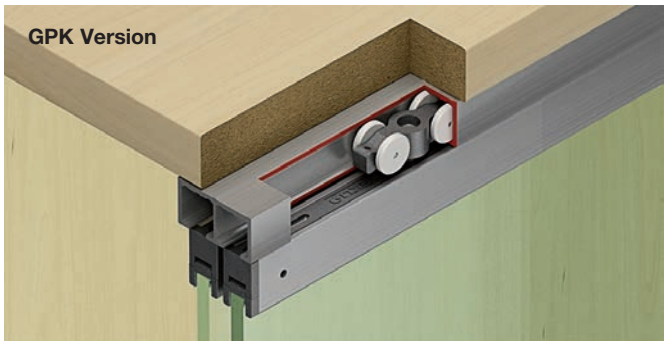

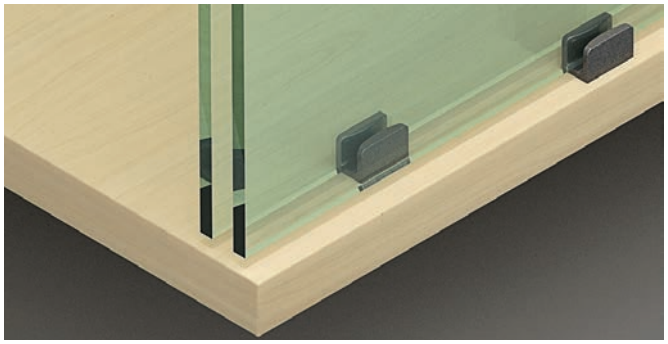

- > Door weight: max. 16 kg. (35 lbs.)
- > Door height: max. 1,400 mm (55 1/8")
- > Door width: max. 1,000 mm (39 3/8")
- > For glass thickness: 6–6.35 mm (1/4")
- > Height adjustment: +2 / -1 mm (+ 3/32" / -1/32")
- > No glass drilling
- > Clip-on running gear provides quick installation
- > For bypassing, frameless glass doors
- > Top hung system allows for no track or groove to be placed in the bottom of the cabinet
- > GPK Version: Glass fixing profile is not required on the bottom of the door
- > GPPK Version: Glass fixing profile is on the top and bottom
- > Optional soft closing mechanism

Running gear installation

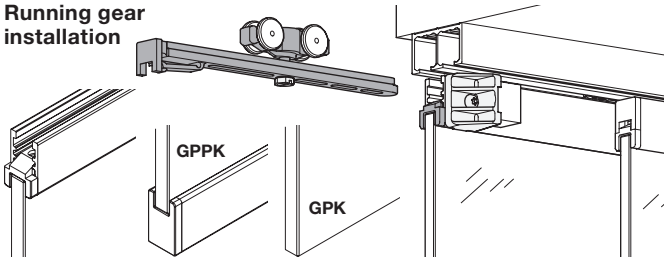

Clipo 16 GPPK

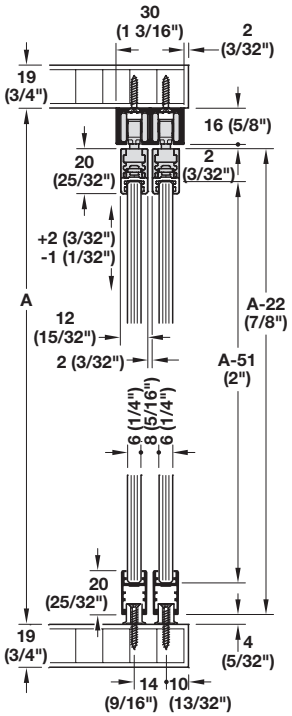

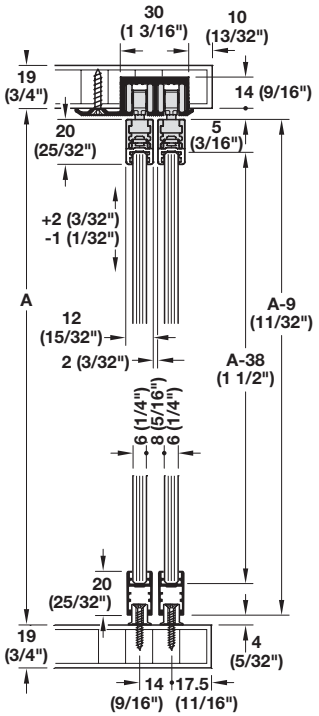

Installation dimensions

Clipo 16 GPK

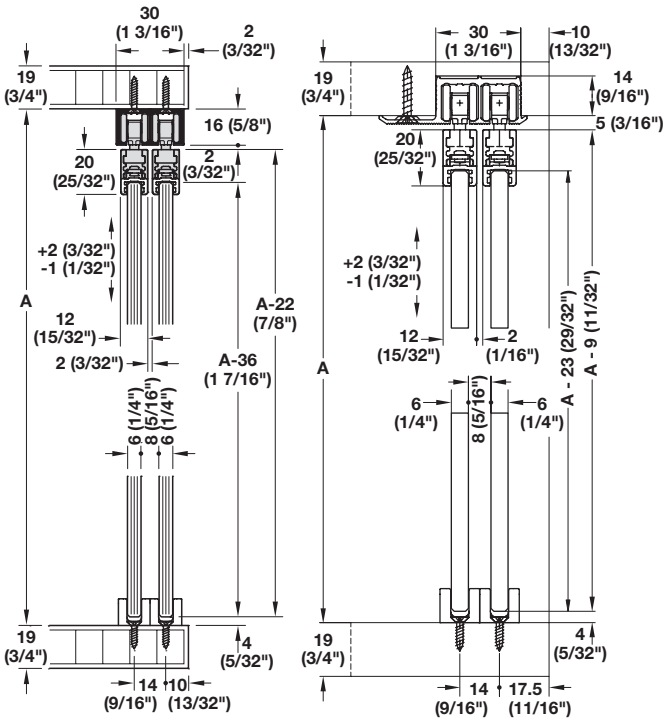

Soft close mounting

Door with one soft closing mechanism.

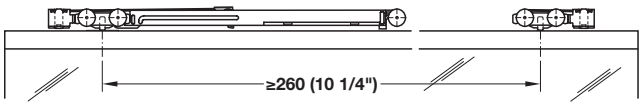

Door with two soft closing mechanisms.

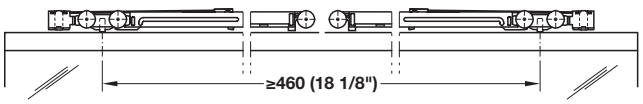

Door overlay

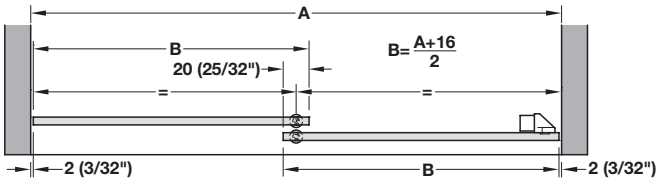

Dimensional data not binding. Dimensions in mm, inches are approximate. We reserve the right to alter specifications without notice.

→ HAWA Clipo 16 GPK/GPPK IF Set

	Version	Supplied With	Item No.
For 2 doors	Clipo 16 GPK IF	4 running gears 2 floor guides 1 door follower 2 door stoppers with clip-in door stopper	405.82.290
	Clipo 16 GPPK IF	4 running gears 2 floor guides 1 door follower 2 door stoppers with clip-in door stopper 4 cover caps	405.82.291

Supplied With
1 set

Note
Only use tempered safety glass

Order Reference
Please order running and guide tracks and glass fixing profiles (GPK: top, GPPK: top and bottom) separately. Soft closing mechanism on one side is possible from pitch length of min. 260 mm (10 1/4"), both sides from 460 mm (18 1/8"). Please order soft closing mechanism set separately.

→ Tracks and Accessories

	Description	Min. top panel thickness	Material	Finish	Length	Item No.
	Glass fixing profile, top and bottom, for glue mounting	–	Aluminum	silver colored, anodized	2.5 m (8' 2 7/16")	405.89.932
	Double upper track, surface mounted, for screw mounting	19 mm (3/4")	Aluminum	silver colored, anodized	2.5 m (8' 2 7/16")	405.90.962
					3.5 m (11' 5 13/16")	405.90.963
	Double upper track, recessed mounted, for screw mounting	19 mm (3/4")	Aluminum	mill	2.5 m (8' 2 7/16")	405.90.972
					3.5 m (11' 5 13/16")	405.90.973
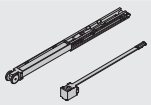	Soft closing mechanism for retrofitting or for soft closing on both sides, with installation instructions	–	Plastic	–	–	405.10.075

Dimensional data not binding. Dimensions in mm, inches are approximate. We reserve the right to alter specifications without notice.

HAWA Clipo 36 GPK/GPPK IF

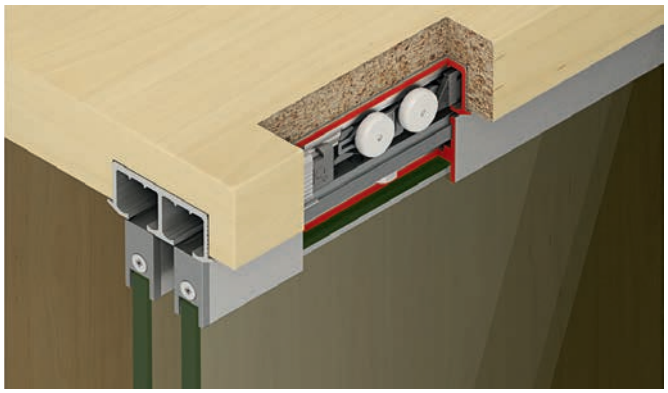

- > Door weight: max. 36 kg (79 lbs.)
- > Door height: max. 2000 mm (6' 6 3/4")
- > Door width: max. 1000 mm (3' 3 3/8")
- > Door thickness: 6–8 mm (1/4"–5/16")
- > Height adjustment: +/-2 mm (3/32")
- > Running gear with four plastic rollers
- > No guide rails in the bottom of the cabinet
- > GPK Version: Glass fixing profile is on the top of the door, floor guide located at the bottom
- > GPPK Version: Glass fixing profile is on the top and bottom of the door, floor guide is concealed within the profile
- > Optional soft closing mechanism

GPPK Version

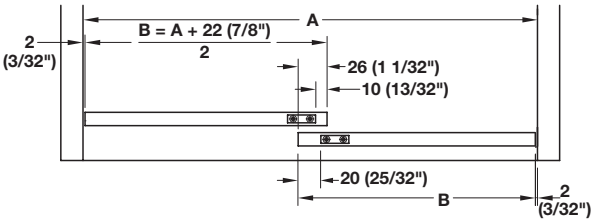

GPK Version

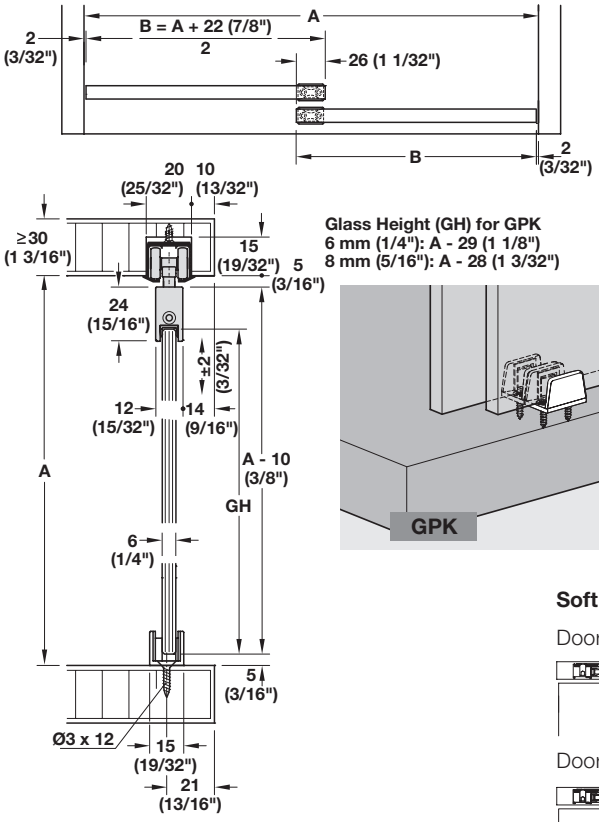

Glass Height (GH) for GPK
6 mm (1/4"): A - 29 (1 1/8")
8 mm (5/16"): A - 28 (1 3/32")

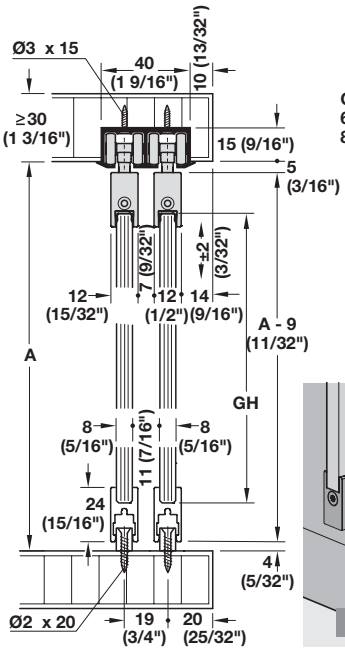

Glass Height (GH) for GPPK
6 mm (1/4"): A - 46 (1 13/16")
8 mm (5/16"): A - 44 (1 3/4")

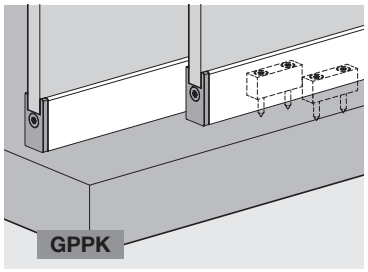

Soft close mounting

Door with one soft closing mechanism.

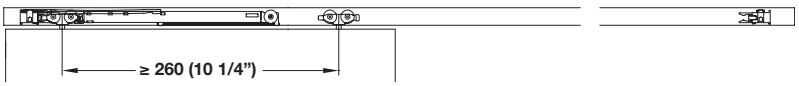

Door with two soft closing mechanisms.

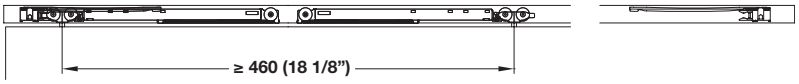

Dimensional data not binding. Dimensions in mm, inches are approximate. We reserve the right to alter specifications without notice.

→ HAWA Clipo 36 GPK/GPPK IF Set

	Version	Supplied With	Item No.
For 1 door	Clipo 36 GPK	2 running gears 1 clear threshold floor guide 2 door stoppers with clip-in door stopper Mounting material	405.02.410
	Clipo 36 GPPK	2 running gears 1 bottom guide 3 covers 2 door stoppers with clip-in door stopper Mounting material	405.02.411

Supplied With
1 set

Order Reference
Please order running and guide tracks and glass fixing profiles (GPK: top, GPPK: top and bottom) separately. Soft closing mechanism on one side is possible from pitch length of min. 260 mm (10 1/4"), both sides from 460 mm (18 1/8"). Please order soft closing mechanism set separately.

→ Tracks and Accessories

	Description	Material	Finish	Length/Door weight	Item No.
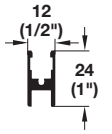	Glass fixing profile, for top and bottom of door, for glue mounting	Aluminum	anodized, silver	2.5 m (8' 2 7/16")	405.03.202
				3.5 m (11' 5 13/16")	405.03.203
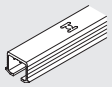	Upper track, pre-drilled, for screw mounting	Aluminum	anodized, silver	2.5 m (8' 2 7/16")	405.00.622
				3.5 m (11' 5 13/16")	405.00.623
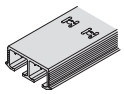	Double upper track, pre-drilled, for screw mounting	Aluminum	anodized, silver	2.5 m (8' 2 7/16")	405.02.622
				3.5 m (11' 5 13/16")	405.02.623
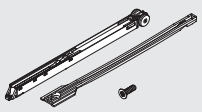	Soft closing mechanism, optional for screw mounting to housing. One set includes two mechanisms. Two sets are required for dual soft closing of two doors.	Plastic	gray	up to 15 kg (33 lbs.)	405.10.073
				15–27 kg (34–57 lbs.)	405.10.074
				26–36 kg (57–79 lbs.)	940.48.045
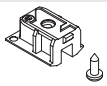	Service port for upper track (to access running gear after installation)	Plastic	gray	–	405.00.072
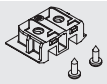	Service port for double upper track (to access running gear after installation)	Plastic	gray	–	405.00.074

Dimensional data not binding. Dimensions in mm, inches are approximate. We reserve the right to alter specifications without notice.

HAWA Clipo 36 G IF

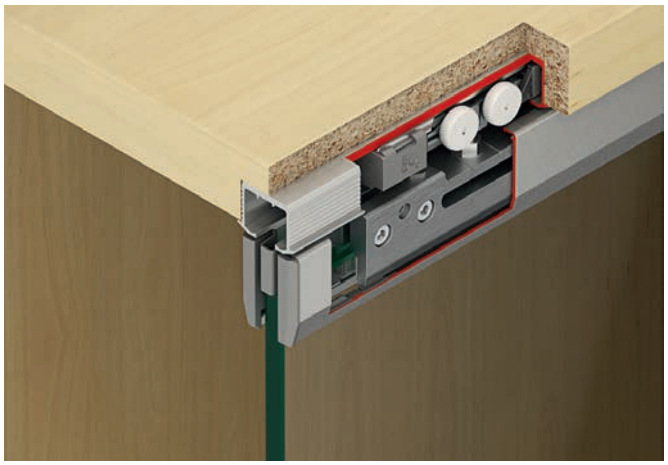

> Door weight: max. 36 kg (79 lbs.)
> Door height: max. 2000 mm (6' 6 3/4")
> Door width: max. 1000 mm (3' 3 3/8")
> Door thickness: 6–8 mm (1/4"–5/16")
> Height adjustment: +/-2 mm (3/32")
> Running gear with four plastic rollers
> Optional soft closing mechanism

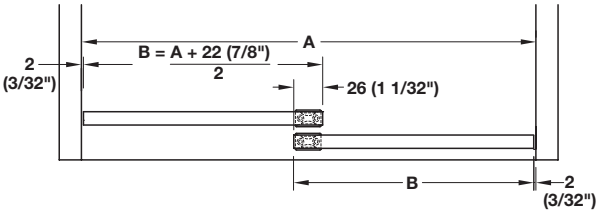

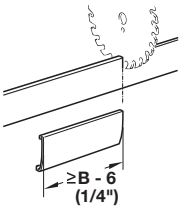

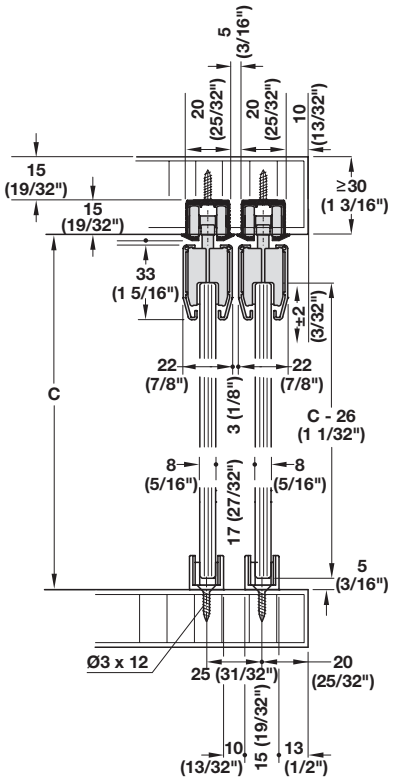

Soft close mounting

Door with one soft closing mechanism.

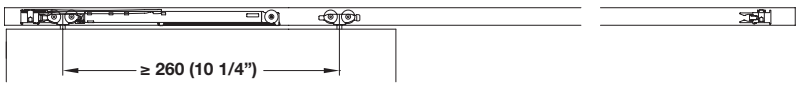

Door with two soft closing mechanisms.

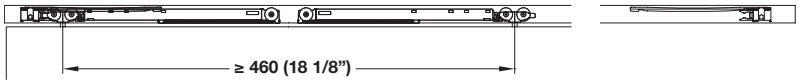

Positioning

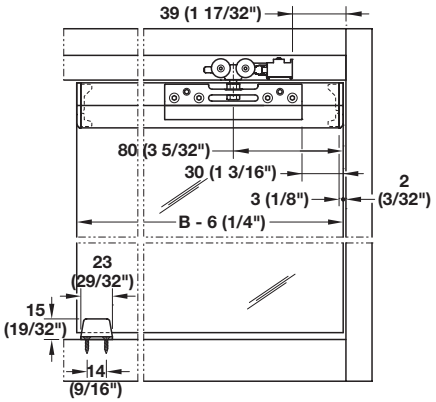

Dimensional data not binding. Dimensions in mm, inches are approximate. We reserve the right to alter specifications without notice.

→ HAWA Clipo 36 G IF Set

	Supplied With	Item No.
For 1 door	2 running gears 1 bottom guide 2 clamp shoes for glass 2 door stoppers with clip-in door stopper Mounting material	405.02.409

Supplied With
1 set

Note
Only use tempered safety glass. Please order running and guide tracks separately. Soft closing mechanism on one side is possible from pitch length of min. 260 mm (10 1/4"), both sides from 460 mm (18 1/8"). Please order soft closing mechanism set separately.

→ Tracks and Accessories

	Description	Material	Finish	Length/Door weight	Item No.
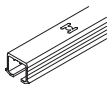	Upper track, pre-drilled, for screw mounting	Aluminum	anodized	2.5 m (8' 2 7/16")	405.00.622
				3.5 m (11' 5 13/16")	405.00.623
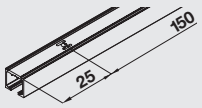	Upper track, pre-drilled, surface mounted	Aluminum	anodized	2.5 m (8' 2 7/16")	405.00.632
	Soft closing mechanism, optional One set includes two mechanisms. Two sets are required for dual soft closing of two doors.	Plastic and Aluminum	–	15.4–26 kg (34–57 lbs.)	405.10.074
				26–36 kg (57–79 lbs.)	940.48.045
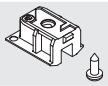	Service port for upper track (To access running gear after installation)	Plastic	gray	–	405.00.072
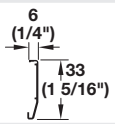	Clip-on fascia	Aluminum	anodized silver	2.5 m (8' 2 7/16")	405.23.902
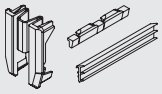	End cap set	Plastic	–	–	405.02.050

Dimensional data not binding. Dimensions in mm, inches are approximate. We reserve the right to alter specifications without notice.

HAWA Clipo 26 GR IF

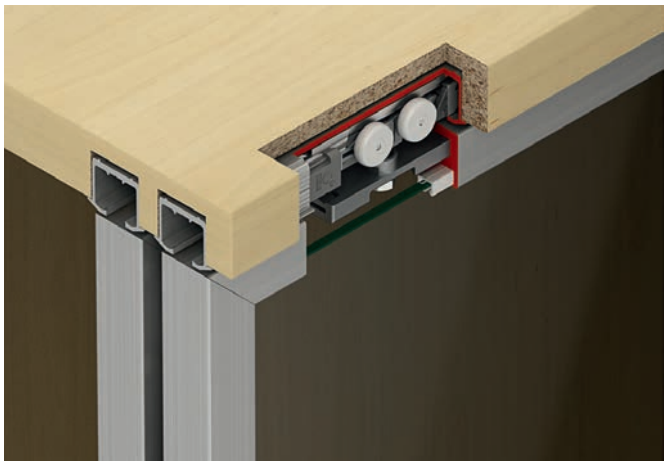

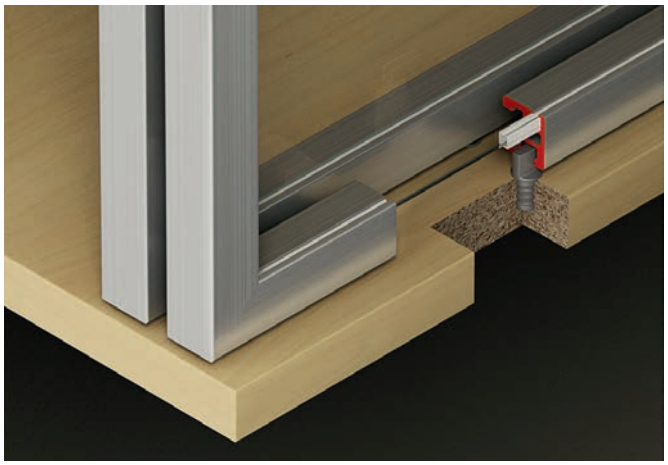

> Door height: max. 2000 mm (78 3/4")
> Door width: max. 800 mm (31 1/2")
> Door weight: max. 26 kg (57.2 lbs.)
> For glass door thickness: 4 mm (5/32")
> Top running with 4 rollers

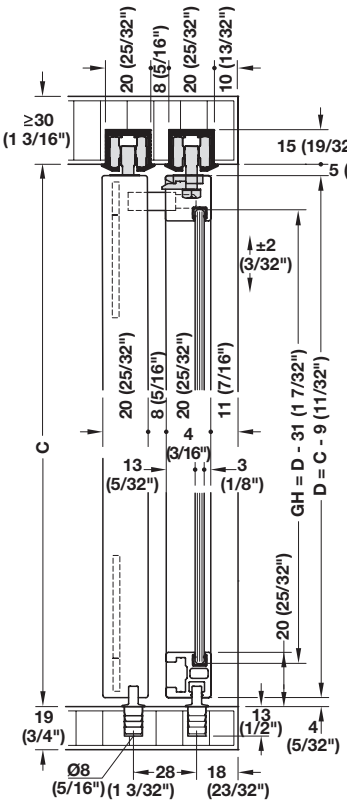

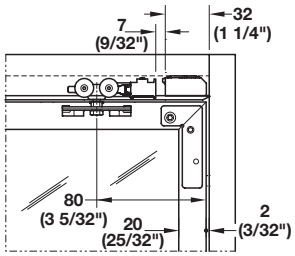

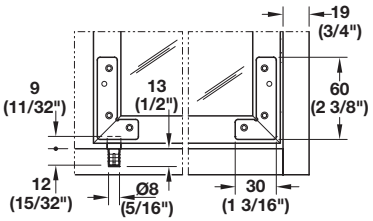

Soft close mounting

Door with one soft close mechanism.

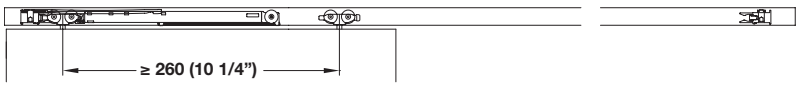

Door with two soft close mechanisms.

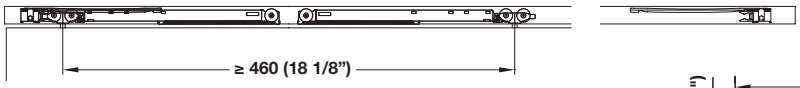

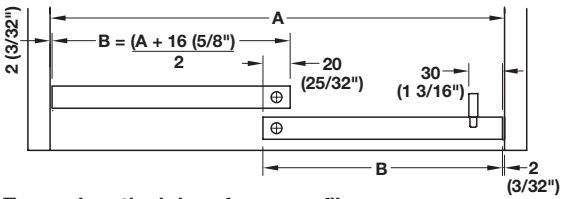

Top and vertical door frame profile

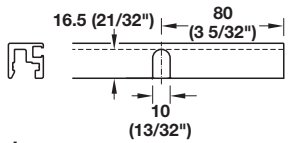

Note
Use routing jig 402.80.001, see next page.

Dimensional data not binding. Dimensions in mm, inches are approximate. We reserve the right to alter specifications without notice.

→ HAWA Clipo 26 GR IF Set

	Supplied With	Item No.
For 2 doors	4 running gears 2 floor guides 8 corner brackets (4 each left/right) 1 door follower 4 door stoppers with clip-in door stopper	405.00.007

Supplied With
1 set

Note
Please order one soft closing mechanism for each door for soft opening and soft closing action separately with pitch lengths of running gears from 460 mm (18 1/8") and above.

→ Tracks and Accessories

	Description	Material	Finish	Length	Item No.
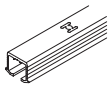	Single upper track, pre-drilled, for screw mounting	Aluminum	anodized, silver	2.5 m (8' 2 7/16")	405.00.622
				3.5 m (11' 5 13/16")	405.00.623
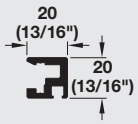	Door frame profile, top/vertical	Aluminum	anodized, silver	2.5 m (8' 2 7/16")	401.64.902
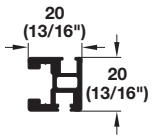	Door frame profile, bottom	Aluminum	anodized, silver	2.5 m (8' 2 7/16")	401.66.902
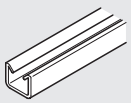	Gasket, for aluminum frame profile	Plastic	gray	2.5 m (8' 2 7/16")	401.65.526
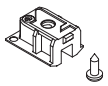	Track end piece	Plastic	gray	–	405.00.072
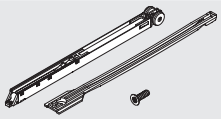	Soft closing mechanism for door weights up to 15 kg (33 lbs.)	Plastic and Aluminum	–	–	405.10.073
	Soft closing mechanism for door weights up to 26 kg (57.2 lbs.)				405.10.074
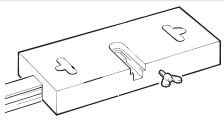	Routing jig for top and vertical door frame profile	–	–	–	401.80.001

Dimensional data not binding. Dimensions in mm, inches are approximate. We reserve the right to alter specifications without notice.

HAWA Regal A 25 GR VF

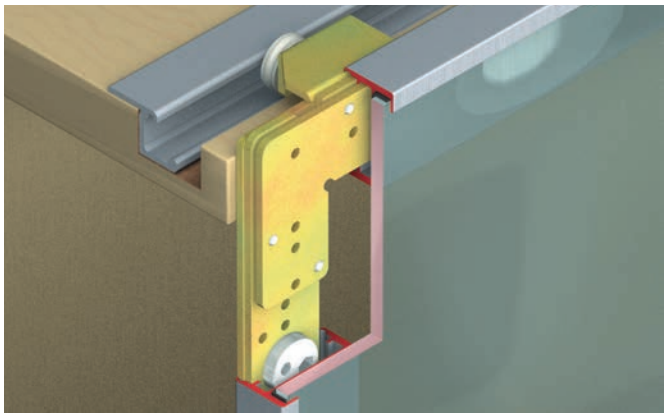

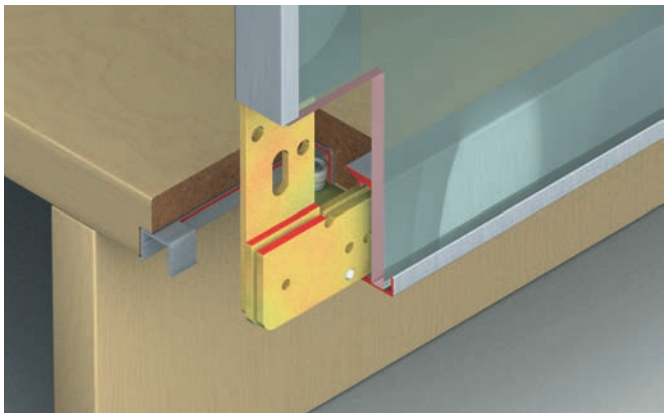

- > Door weight: max. 25 kg (55 lbs.)
- > Door height: max. 2200 mm (86 5/8")
- > Door width: max. 1200 mm (47 1/4")
- > For glass thickness: 4 mm (5/32")
- > Eccentric height adjustment: ±2 mm (± 3/32") on running gear
- > Simple construction of aluminum frame door – miter profile (no further shaping required), assembled with angle connectors, screw mount and install fittings
- > Rails not visible

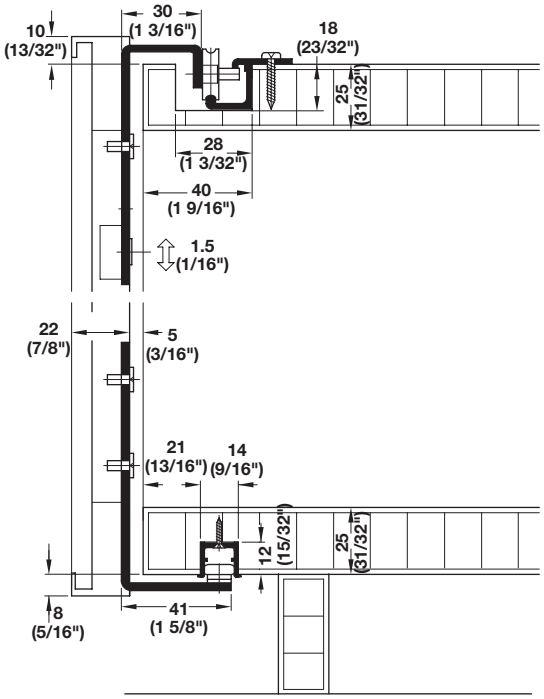

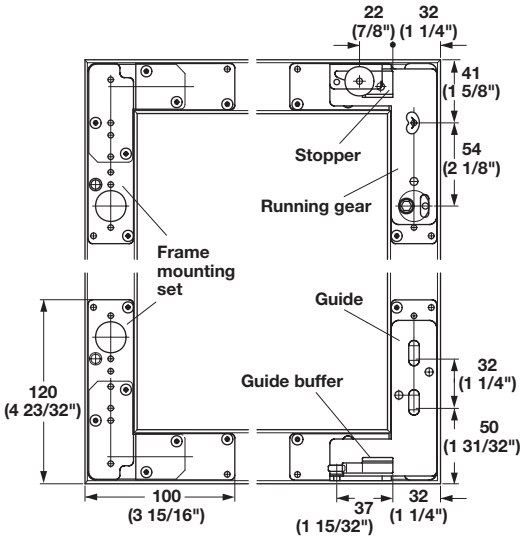

Installation

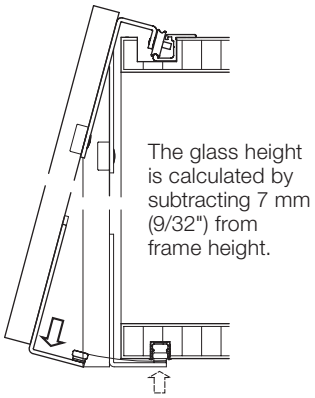

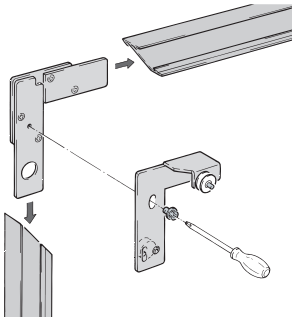

Dimensional data not binding. Dimensions in mm, inches are approximate. We reserve the right to alter specifications without notice.

→ HAWA Regal A 25 GR VF Set

	Supplied With	Item No.
For 1 aluminum frame sliding door	2 running gears, single roller 2 guides Frame mounting set (4 angles) 2 stoppers, 1 left hand/1 right hand 2 guide buffers	405.55.111

Note
The complete set is always delivered without track, lower guide channel, glass profiles and accessories. Please order separately.

→ Tracks and Accessories

	Description	Material	Finish	Length	Item No.
	Upper track, with screw holes	Aluminum	anodized	2.5 m (8' 2 7/16")	405.56.002
	Lower guide channel, with screw holes, for screw mounting in cabinet bottom with minimum 19 mm (3/4") wood thickness	Aluminum	mill	2.5 m (8' 2 7/16")	405.30.026
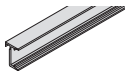	Door frame profile	Aluminum	anodized, silver	2.5 m (8' 2 7/16")	405.58.002
				3.5 m (11' 5 11/16")	405.58.003
	Glass gasket	Plastic	gray	2.5 m (8' 2 7/16")	401.65.526
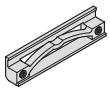	Intermediate door stop, optional	Plastic	gray	–	405.33.030

Pan head screws pages 12.9–12.10

Dimensional data not binding. Dimensions in mm, inches are approximate. We reserve the right to alter specifications without notice.

Accessories

→ Dust Cover Profile

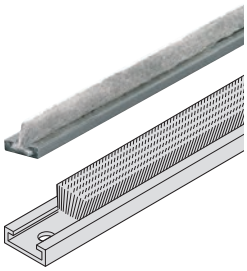

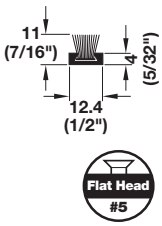

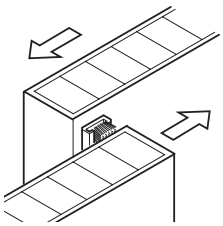

> With artificial fiber brush
> Screw mounted to cabinet sliding doors
> Length: 2.5 m (8' 2 7/16")
> Material: Aluminum, unfinished

Item No.
406.41.808

Panel Retainer

> Installs easily and quickly
> Retains glass while eliminating rattle
> Eliminates unsightly moulding
> No staples, screws or glue required
> Allows glass to be shipped installed
> Allows glass to "flex" and helps prevent "torquing"
> Makes it much easier to replace broken panes

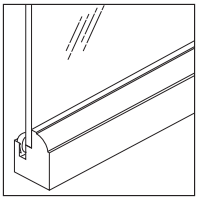

To install
> Route groove
> Insert glass
> Insert panel retainer

→ Standard Profile Strip

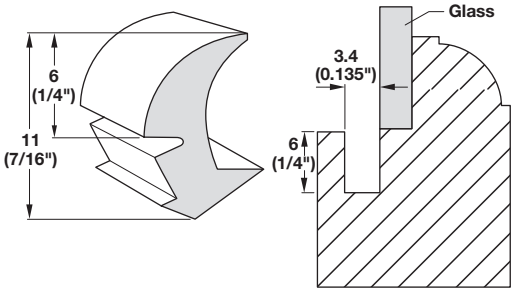

> For general application
> Length: 304.8 m (1000')
> Material: Vinyl, transparent

Item No.
706.60.411

→ Tall Profile Strip

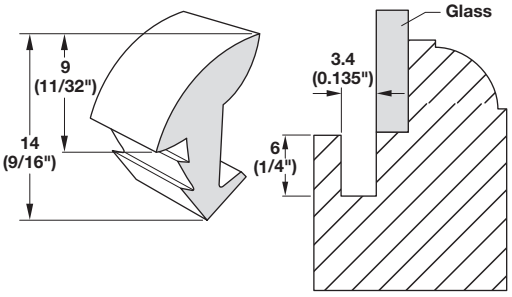

> For use if glass is cut short or is too thin
> Length: 304.8 m (1000')
> Material: Vinyl, transparent

Item No.
706.62.411

→ Thick Profile Strip

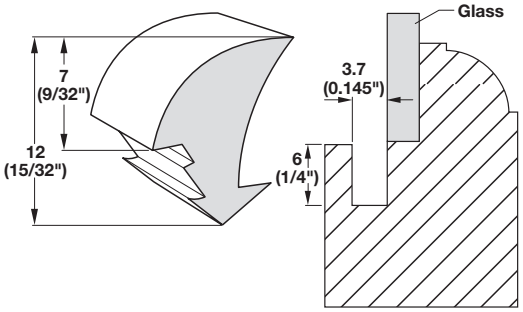

> For use if groove is cut too wide
> Length: 304.8 m (1000')
> Material: Vinyl, transparent

Item No.
706.61.411

Flat head screws pages 12.7–12.8, 12.10, 12.13

Dimensional data not binding. Dimensions in mm, inches are approximate. We reserve the right to alter specifications without notice.

Planofit Set For Wood Doors

> Door thickness: from 16 mm (5/8")
> Door height: max. 2400 or 2650 mm (94 1/2" or 104 5/16")
> Adds rigidity and prevents warping and twisting
> Can be installed in new doors or retrofitted into existing doors
> To straighten warped doors
> Installation of two fittings per door is recommended
> Not recommended for hard wood
> Material: Threaded rod: Steel, galvanized
Tensioner: Zinc alloy, bright
Trim strip, Cover caps and Retaining plate: Plastic

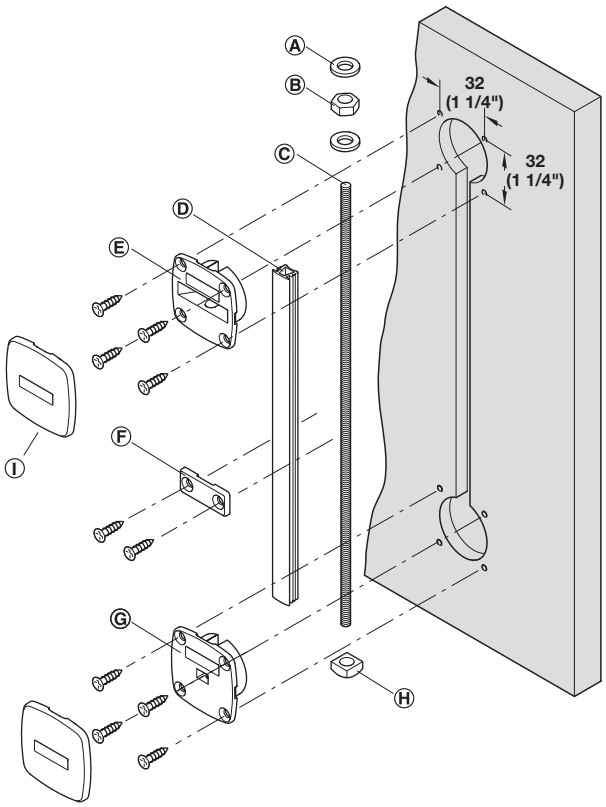

Ⓐ Lock washer
Ⓑ Hexagon nut
Ⓒ Threaded rod
Ⓓ Trim strip
Ⓔ Open-type tensioner
Ⓕ Retaining plate
Ⓖ Closed-type tensioner
Ⓗ Square nut
Ⓘ Cover Cap

Door height	Dim. A	black	white
Max. 2400 (94 1/2")	<1900 (74 25/32")	407.90.010	407.90.012
Max. 2650 (104 5/16")	<2175 (85 5/8")	407.90.011	407.90.013

Supplied With
2 Threaded rods – 2195 mm (86 7/16")
2 Trim strips – 2138 mm (84 3/16")
4 Tensioners
2 Square nuts
2 Hexagon nuts
4 Cover caps (for open-type tensioner and closed-type tensioner)
8 Retaining plates
4 Lock washers

Note
Order 1 set per door.
The threaded rod as well as the trim strip are shortened proportionally, depending on the door height, to change the distance between the hole centers.
Open-ended 10 mm wrench is needed for adjustment.

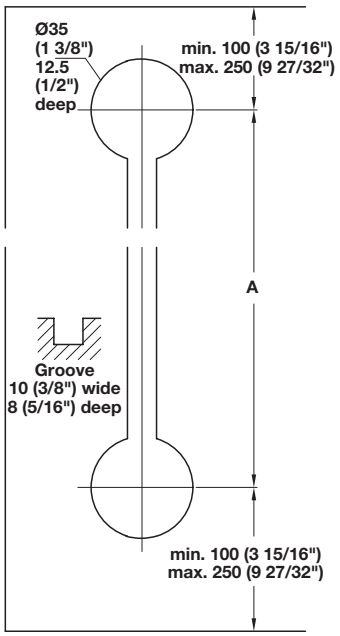

Dimensional data not binding. Dimensions in mm, inches are approximate. We reserve the right to alter specifications without notice.

Straightening Fitting

→ Häfele Planomix

> For wood doors
> High-quality aluminium trim strip
> For hinged doors and sliding doors; prevents doors warping in either direction or straightens doors which have become warped
> Door height: max. 2,400 mm (94 1/2") or 2,600 mm (102 3/8")
> Door thickness: from 16 mm (5/8")
> For press fitting
> Adjusts via hexagonal nut with SW 8 open-ended spanner
> Material: Threaded bar: Steel; Tensioner: Zinc alloy
Trim strip: Aluminium
Cover caps and Clip-on profile: Plastic
Finish: Trim strip: Anodized
Cover caps: Aluminum effect lacquered

Door height max.	Threaded bar length	Trim strip length	Item No.
2400 (94 1/2")	2000 (78 3/4")	2000 (78 3/4")	407.92.900
2600 (102 3/8")	2200 (86 5/8")	2200 (86 5/8")	407.92.901

Supplied With
1 set (2 straightening fittings)

Note
2 straightening fittings recommended per door.
Not suitable for hard wood.
When using this product in combination with lacquered doors, a pattern of the routered recesses may emerge on the front.

Installation

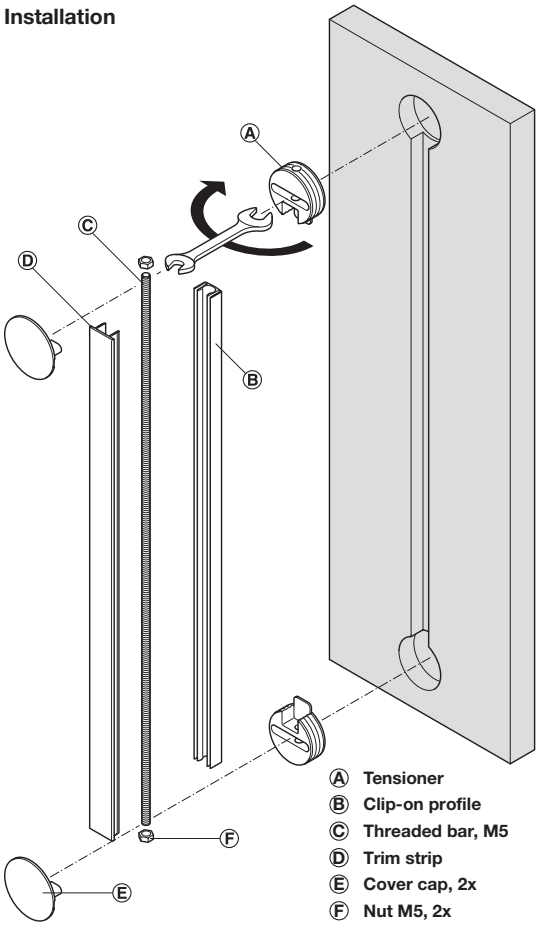

Ⓐ Tensioner
Ⓑ Clip-on profile
Ⓒ Threaded bar, M5
Ⓓ Trim strip
Ⓔ Cover cap, 2x
Ⓕ Nut M5, 2x

Drilling pattern

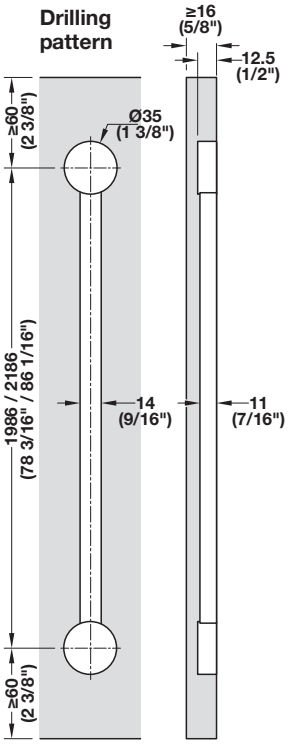

Dimensional data not binding. Dimensions in mm, inches are approximate. We reserve the right to alter specifications without notice.

Straightening Fitting

→ Straightening Fitting

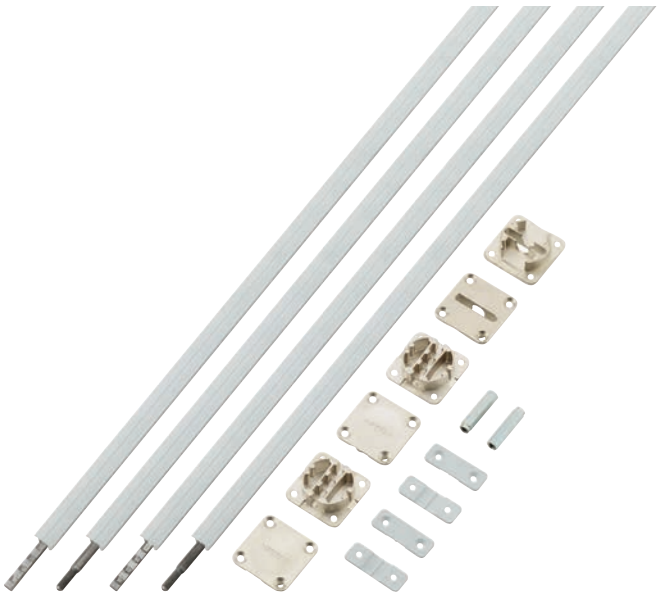

- > For hinged doors and sliding doors
- > Prevents doors warping in either direction or straightens doors which have become warped
- > Door height: 2,000–2,650 mm (78 3/4"–104 5/16")
- > Door thickness: min. 16 mm (5/8")
- > Recess mounted with screws
- > Adjusts via pre-mounted hexagonal nut, with SW 8 open-ended spanner
- > Material: Threaded bar: Steel; Tensioner: Zinc Alloy; Trim strip: Plastic Finish: Tensioner: nickel-plated; Trim strip: gray

Door height max.	Dim. A	Item No.
2250 (88 9/16")	1838 (72 3/8")	406.99.613
2450 (96 7/16")	1988 (78 1/4")	406.99.614
2650 (104 5/16")	2248 (88 1/2")	406.99.615

Supplied With
1 set (2 straightening fittings including all individual components and open-ended spanner)

Note
2 straightening fittings recommended per door leaf.
Not suitable for hard wood!
Please note when using this product in combination with lacquered panels, a pattern of the routered recesses may emerge on the front.

Installation

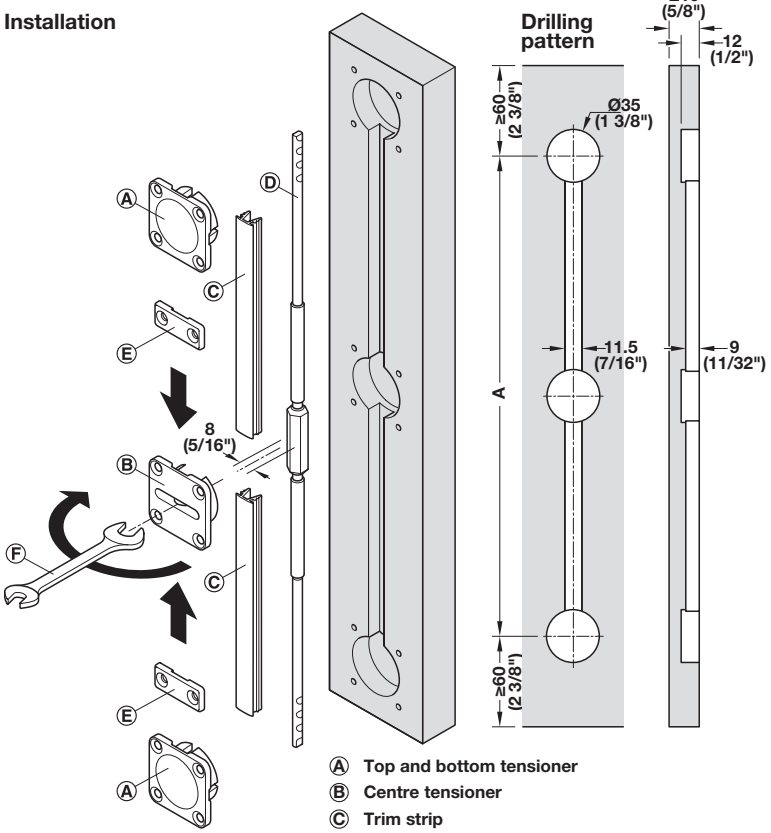

Drilling pattern

Ⓐ Top and bottom tensioner
Ⓑ Centre tensioner
Ⓒ Trim strip
Ⓓ Threaded bar
Ⓔ Retaining plate
Ⓕ Open-ended spanner

Dimensional data not binding. Dimensions in mm, inches are approximate. We reserve the right to alter specifications without notice.

Concertina

> Door width: max. 610 mm (24") for 2 doors
> Height adjustment: +/- 2 mm (3/32")
> Depth adjustment: +2.5 mm (1/8")
> Doors can be mounted to the left or right cabinet side
> Provides excellent access to the cabinet interior
> Concealed hinges are required; 329.17.507 (hinge) and 329.71.502 (mounting plate) are recommended
> Minimal space of approximately 80 mm (3 1/8") is taken up by the door in the maximum open position

Note
Weight capacity depends on the number of hinges.
See chart on next page.

→ Hardware

	Description	Item No.
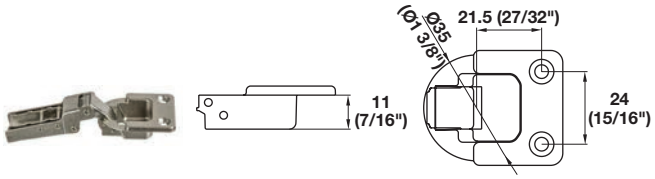	Hinge for sliding block	409.95.710
	Sliding block	409.95.720
	Locating device	409.95.750
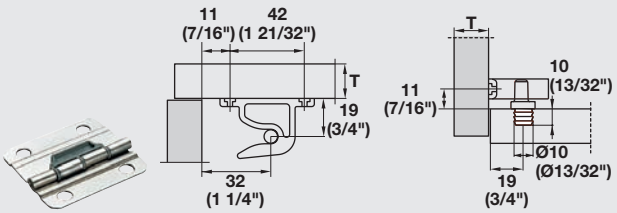	Central hinge	354.07.710

→ Tracks

> Length: 1180 mm (46 7/16")

	Finish	Item No.
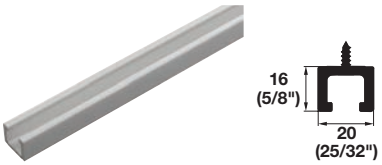	white	409.96.712
	black	409.96.312

329.17.507 hinge	page 9.20
329.71.502 mounting plate	page 9.38

Dimensional data not binding. Dimensions in mm, inches are approximate. We reserve the right to alter specifications without notice.

Concertina

→ Mounting

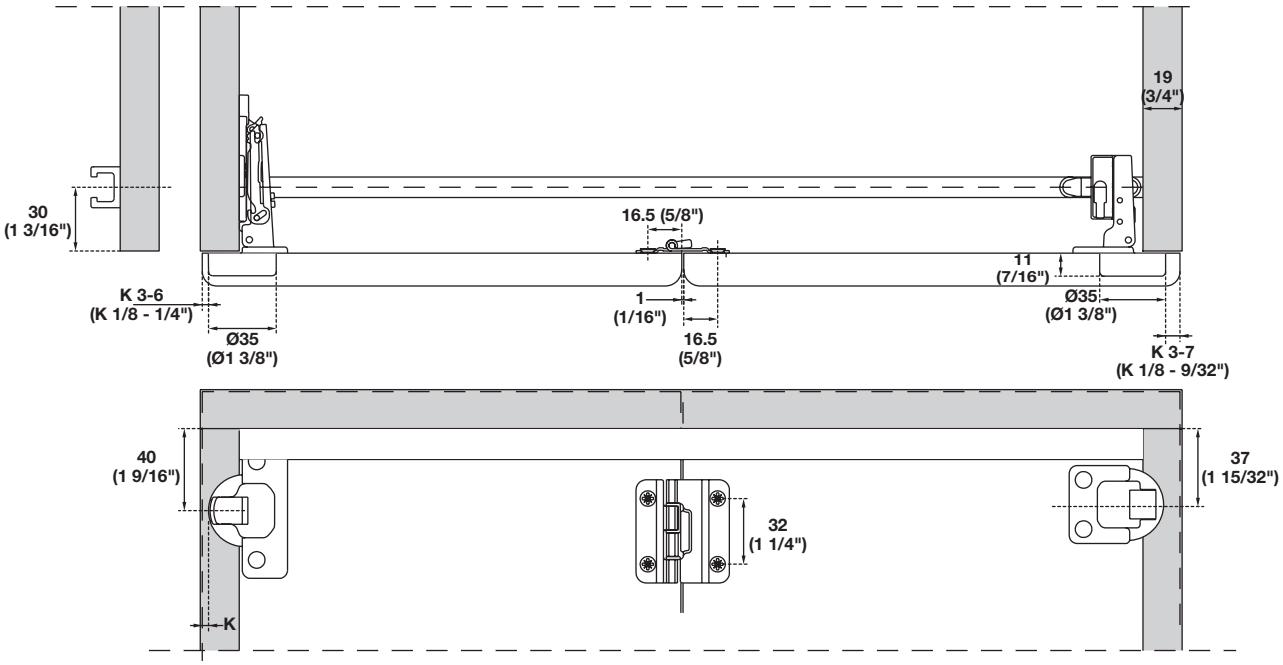

→ Hinge Requirement

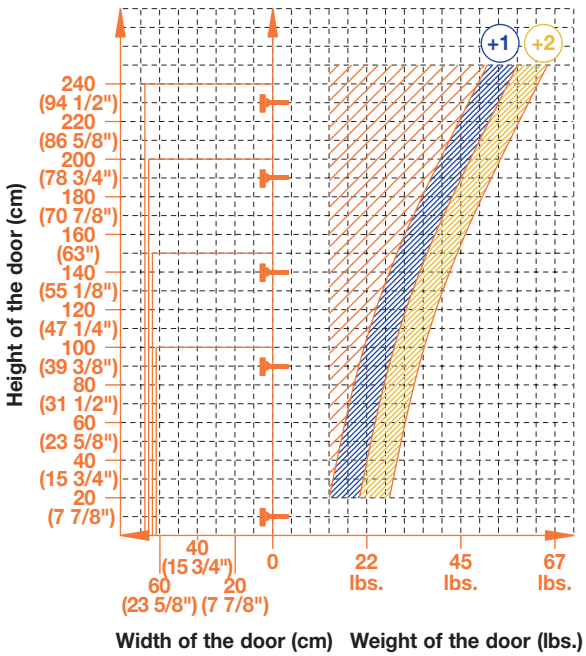

Note
Total width is the combination of both doors.

Dimensional data not binding. Dimensions in mm, inches are approximate. We reserve the right to alter specifications without notice.

Concertina

→ Calibrated Height Adjustment

> Height adjustment of hinges assembled with the sliding components is achieved through a cam
> Through this alignment a parallel movement of the component in the track is achieved
> The result is a smooth movement without any binding

Note
The sliding block does not have a load-bearing function. Therefore it must slide freely inside the track.

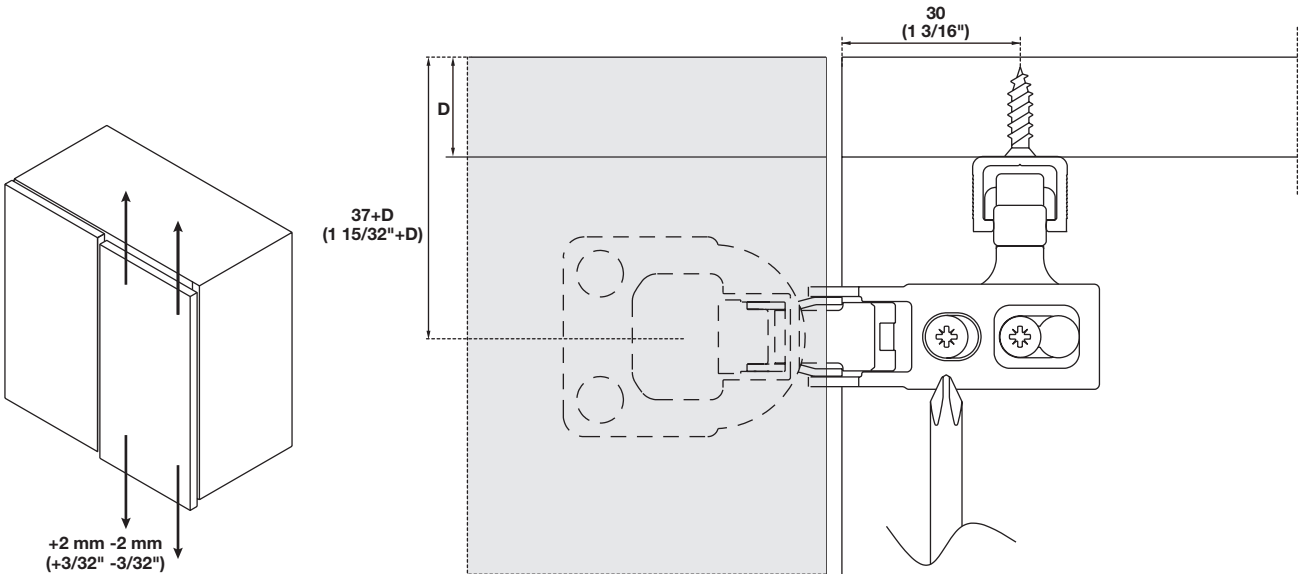

Dimensional data not binding. Dimensions in mm, inches are approximate. We reserve the right to alter specifications without notice.

Concertina

→ Depth Adjustment

> Depth adjustment of the hinges mounted on the sliding component is achieved through the fixing screw of the same hinge
> Depth adjustment should be made in conjunction with the hinges mounted on the opposite door
> This adjustment is useful to keep the “L” value constant all along the front of the furniture

Note
The sliding block does not have a load-bearing function. Therefore it must slide freely inside the track.

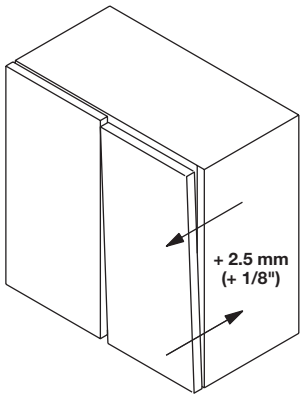

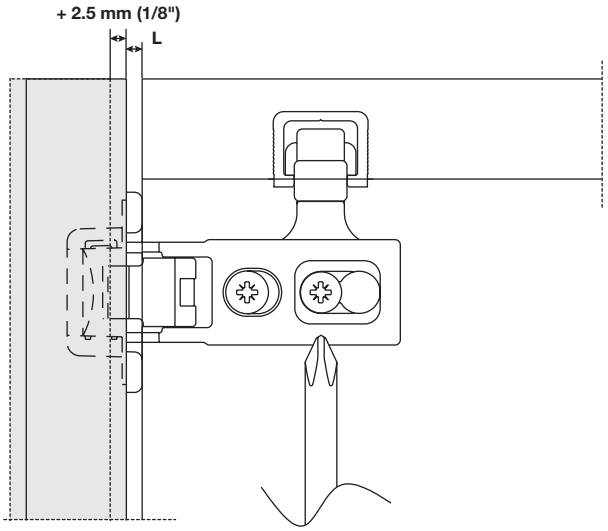

Dimensional data not binding. Dimensions in mm, inches are approximate. We reserve the right to alter specifications without notice.

Häfele Slido F-Fold 61 25A/50A

> Door thickness: 16–19 mm (5/8"–3/4")
> Door weight: up to 25 kg or 50 kg (55 or 110 lbs.) per pair of doors
> For front hung folding cabinet doors
> For 2 panels that can be folded to either the left or right side of the cabinet
> For 4 panels where 2 doors fold left and 2 doors fold to the right of the cabinet
> Outer panels will use standard concealed hinges
> Panels are equal in size

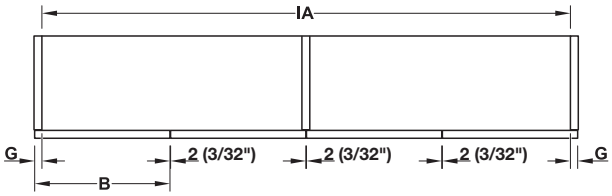

2 pairs of doors

B = IA + 2G – 6(1/4")/4

Calculation of door width

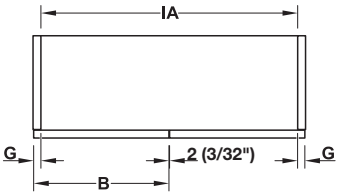

1 pair of doors

B = IA + 2G – 2 (3/32")/2

B = door width
G = door overlap on cabinet side panel
IA = internal cabinet width
T = cabinet top and bottom panel thickness

Installation dimensions

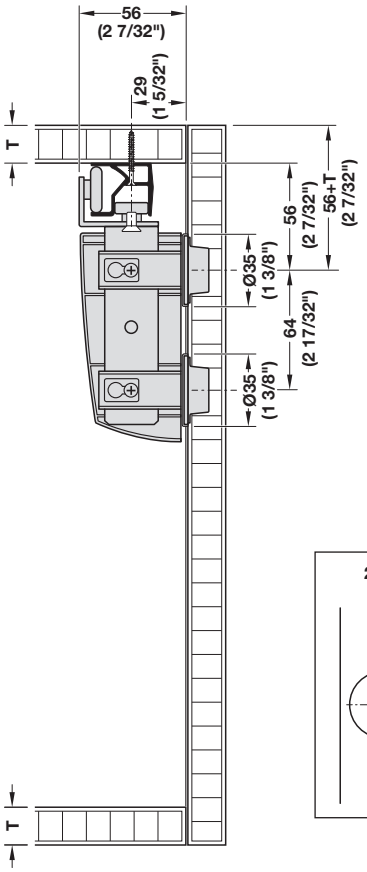

Space requirement

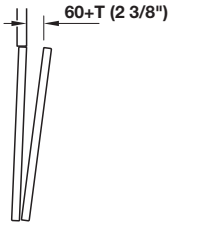

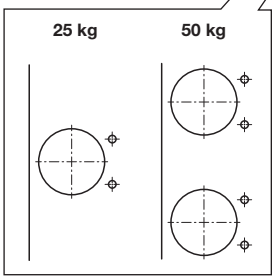

Drilling pattern for door

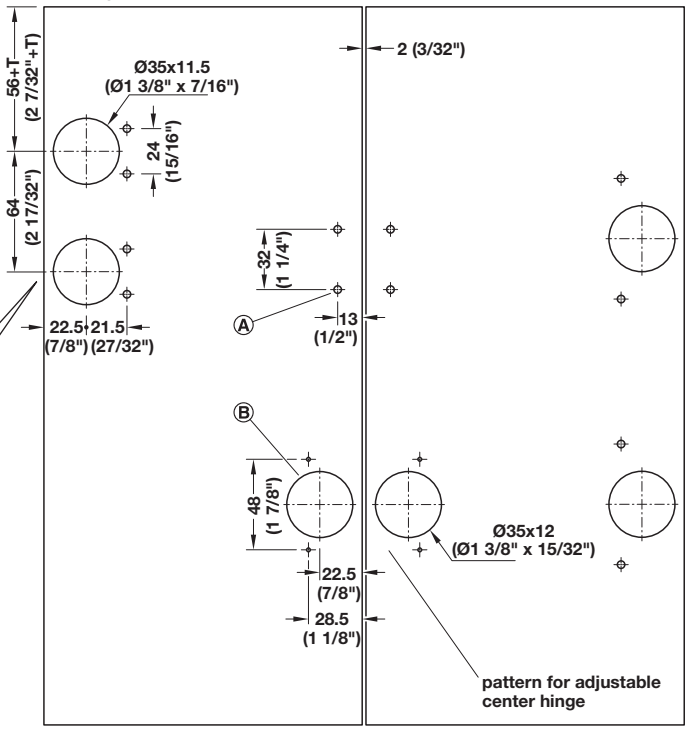

Ⓐ with standard center hinge or
Ⓑ with adjustable center hinge

Dimensional data not binding. Dimensions in mm, inches are approximate. We reserve the right to alter specifications without notice.

→ Häfele Slido F-Fold 61 25A/50A Set

Door weight	Description	Handing	Supplied with	Item No.
25 kg (55 lbs.)	With standard center hinge without cover cap	left	1 running gear with 1 concealed hinge for left door, 4 panel to panel hinges	409.36.032
		right	1 running gear with 1 concealed hinge for right door, 4 panel to panel hinges	409.36.033
		left and right as set	1 running gear with 1 concealed hinge for left door, 1 running gear with 1 concealed hinge for right door, 8 panel to panel hinges	409.36.036
	With adjustable center hinge with white cover cap	left	1 running gear with 1 concealed hinge for left door, 4 adjustable center hinges, 1 cover cap	409.36.044
		right	1 running gear with 1 concealed hinge for right door, 4 adjustable center hinges, 1 cover cap	409.36.045
		left and right as set	1 running gear with 1 concealed hinge for left door, 1 running gear with 1 concealed hinge for right door, 8 adjustable center hinges, 2 cover caps	409.36.048
50 kg (110 lbs.)	With standard center hinge without cover cap	left	1 running gear with 2 concealed hinges for left door, 4 panel to panel hinges	409.36.034
		right	1 running gear with 2 concealed hinges for right door, 4 panel to panel hinges	409.36.035
		left and right as set	1 running gear with 2 concealed hinges for left door, 1 running gear with 2 concealed hinges for right door, 8 panel to panel hinges	409.36.037
	With adjustable center hinge with white cover cap	left	1 running gear with 2 concealed hinges for left door, 4 adjustable center hinges, 1 cover cap	409.36.046
		right	1 running gear with 2 concealed hinges for right door, 4 adjustable center hinges, 1 cover cap	409.36.047
		left and right as set	1 running gear with 2 concealed hinges for left door, 1 running gear with 2 concealed hinges for right door, 8 adjustable center hinges, 2 cover caps	409.36.049

Note
The upper tracks, mounting material and concealed hinges for attachment at the side are not included in the set.
Please order separately.

→ Tracks

Description		Material	Finish	Length	Item No.
Upper track for screw mounting	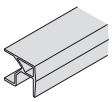	Aluminum	clear anodized	1.5 m (59 1/16")	409.31.601
				2.5 m (98 7/16")	409.31.605

Dimensional data not binding. Dimensions in mm, inches are approximate. We reserve the right to alter specifications without notice.

HAWA Libra 20 H

> For door panel weight: max. 20 kg (44 lbs.)
> Door panel height: max. 1,000 mm (39 3/8")
> Door panel width: max. 1,600 mm (63")
> Door panel thickness: min. 16 mm (5/8")
> Side panel thickness: min. 16 mm (5/8")
> Independent vertical sliding door system for wood doors
> For inlay or overlay doors

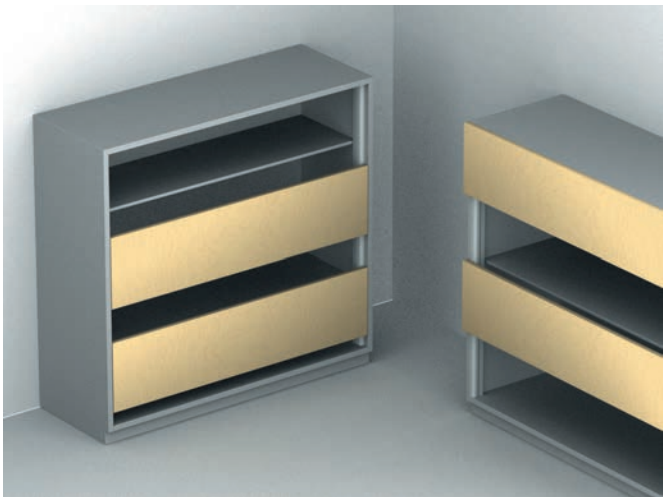

Calculating the weight of the door:
Remember to take the weight of the door handle into account when calculating the total door weight.

Weight of door
+ Weight of sliding door hardware (=0.050 kg or .11 lbs.)
+ Weight of door handle
= Total weight of the door

Weight of the door panel = Width in square inches x height in square inches x weight (lb) in square inches

How to determine counterweight in square inches, width and height:
Square inches = Total weight of door/weight in lbs./square inches based on counterweight material.

Interior cabinet width
– 118 mm (4 5/8")
= Width of counterweight

Height of counterweight = Square feet of counterweight / Width of counterweight

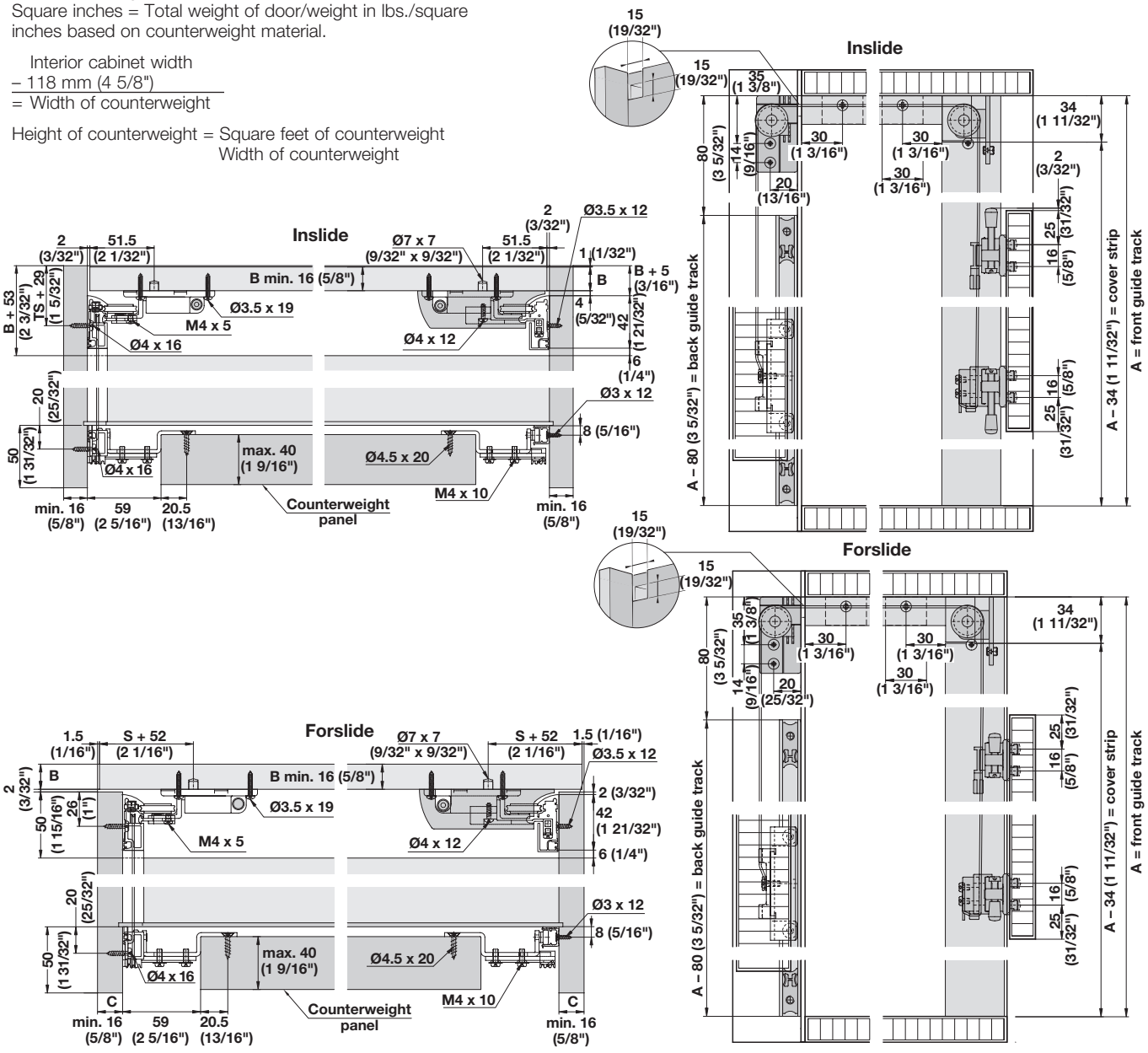

Dimensional data not binding. Dimensions in mm, inches are approximate. We reserve the right to alter specifications without notice.

→ HAWA Libra 20 H Set

	Supplied With	Item No.
For 1 sliding door	2 pcs. sliding hardware with cam adjust 2 pcs. sliding hardware with spring 2 reverse rollers, front 2 reverse rollers, back 2 door safeties 2 rope brackets 2 tightening bolt for rope bracket 2 pcs. rope 1.5 x 3500 mm (1/16" x 11' 5 13/16") 4 cover caps 2 guides for counterweight 2 rope guides for counterweight 4 covers for sliding hardware 4 clips for cover strip 4 door panel stops (top and bottom)	403.20.001

Supplied With
1 set

Note
Please order front guide track, back guide track, and cover strip separately (see below).

→ Guide Tracks and Accessories

	Description	Material	Finish	Item No.
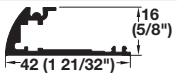	Front guide track, 2.5 m (8' 2 7/16"), requires wood screws	Aluminum	silver anodized	403.21.902
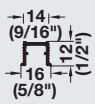	Back guide track, 2.5 m (8' 2 7/16"), requires wood screws	Aluminum	mill	405.30.026
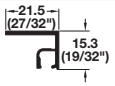	Clip-on cover strip for front guide track, 2.5 m (8' 2 7/16")	Aluminum	silver anodized	403.22.902
	Additional guide for counterweights taller than 500 mm (19 11/16"), 2 pcs. required	Steel	zinc-plated	403.23.900

Dimensional data not binding. Dimensions in mm, inches are approximate. We reserve the right to alter specifications without notice.

HAWA Libra 20 H Synchro

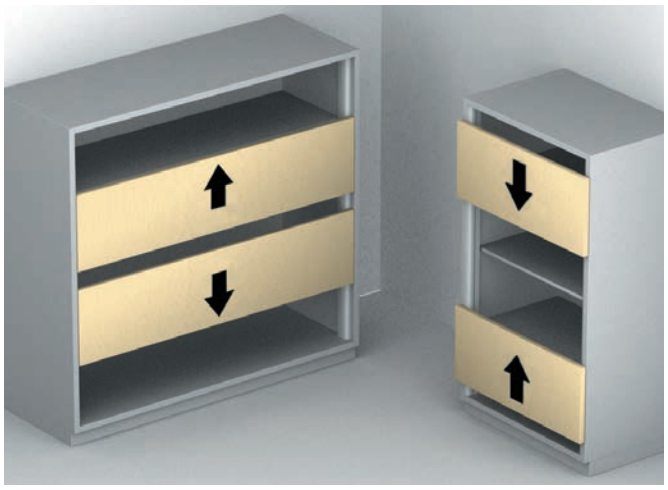

- > Door height: max. 1,000 mm (39 3/8")
- > Door width: max. 1,600 mm (63")
- > Door thickness: min. 16 mm (5/8")
- > Side panel thickness: min. 16 mm (5/8")
- > Door weight: up to 20 kg (44 lbs.) each
- > For 2 wood doors that are synchronized
- > All hardware is surface mounted

Note
In general, doors should be the same size, and must weigh the same as they need to counter balance each other.

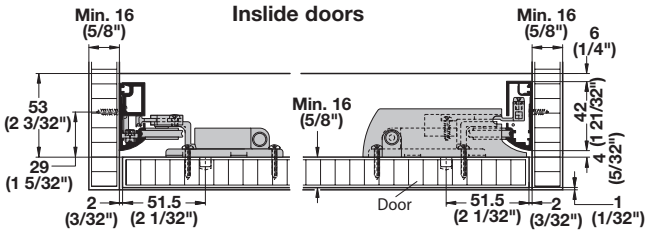

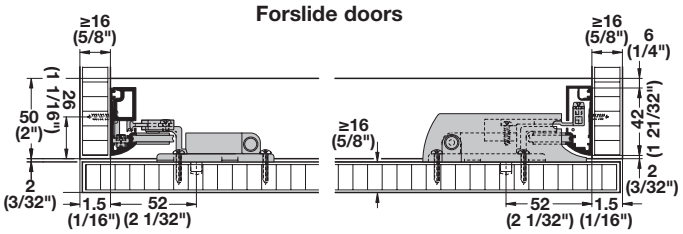

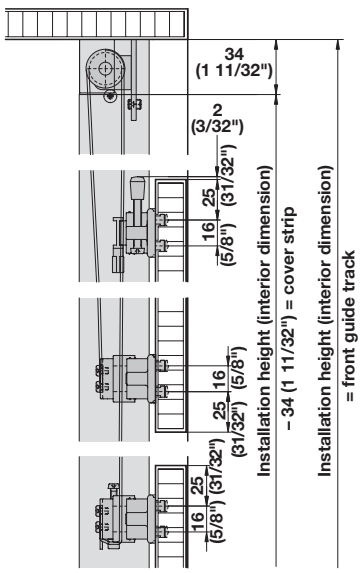

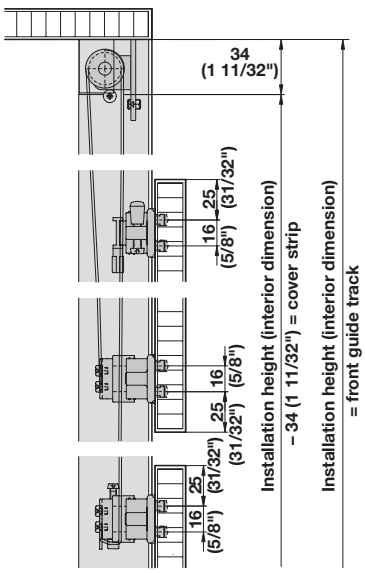

Dimensional data not binding. Dimensions in mm, inches are approximate. We reserve the right to alter specifications without notice.

→ HAWA Libra 20 H Synchro Set

	Supplied With	Item No.
For 2 sliding doors	4 pcs. sliding hardware with cam adjust 4 pcs. sliding hardware with spring 2 reverse rollers, front 2 door safeties 4 rope brackets 2 tightening bolts for rope bracket 2 ropes 1.5 x 3500 mm (1/16" x 11' 5 13/16") 2 cover caps 8 covers for sliding hardware	403.20.010

Supplied With
1 set

Note
Please order front guide track and cover strip separately, see below.

→ Guide Tracks and Accessories

	Description	Length	Material	Finish	Item No.
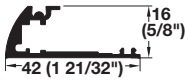	Front guide track, requires wood screws	2.5 m (8' 2 7/16")	Aluminum	silver anodized	403.21.902
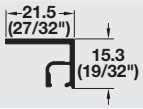	Clip-on cover strip	2.5 m (8' 2 7/16")	Aluminum	silver anodized	403.22.902

Dimensional data not binding. Dimensions in mm, inches are approximate. We reserve the right to alter specifications without notice.

Finetta F-Line 32 23A

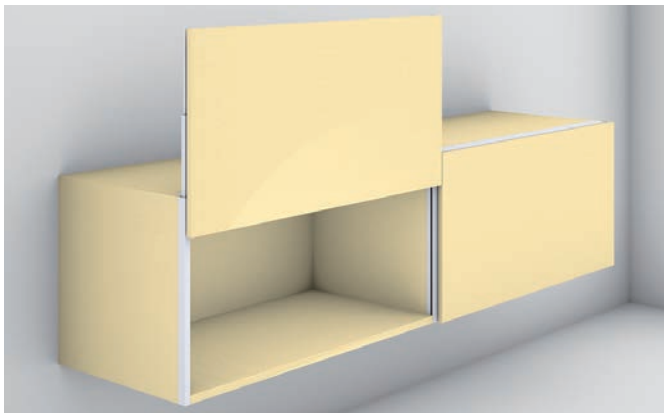

> Cabinet height: 480* or 600 mm (18 7/8" or 23 5/8")
> For side panel thickness: 19 mm (3/4")
> Vertical adjustment: +/- 3 mm (1/8")
> For single door vertical sliding applications.
> Opening and closing controlled by torsion spring
> Conterweights are not required
> The door stops and stays in place in any position
> Mechanism is contained within load-bearing support profile
> Door size / weight chart on next page

Note
*The 480 mm (18 7/8") version is a special order and will have a longer lead time.

Drilling pattern - door

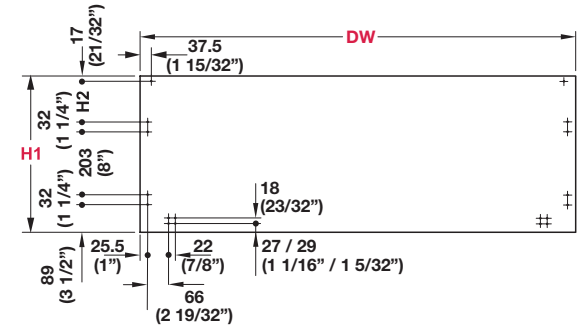

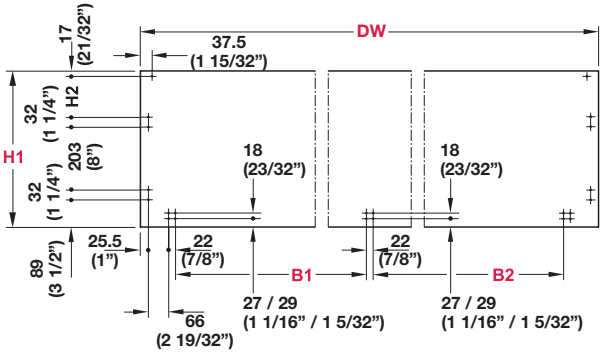

Door width (**DW**) 1800 mm (70 7/8") and 2400 mm (94 1/2") with center intermediate panel.

Drilling pattern - cabinet

X = Side panel thickness: 19 mm (3/4") only

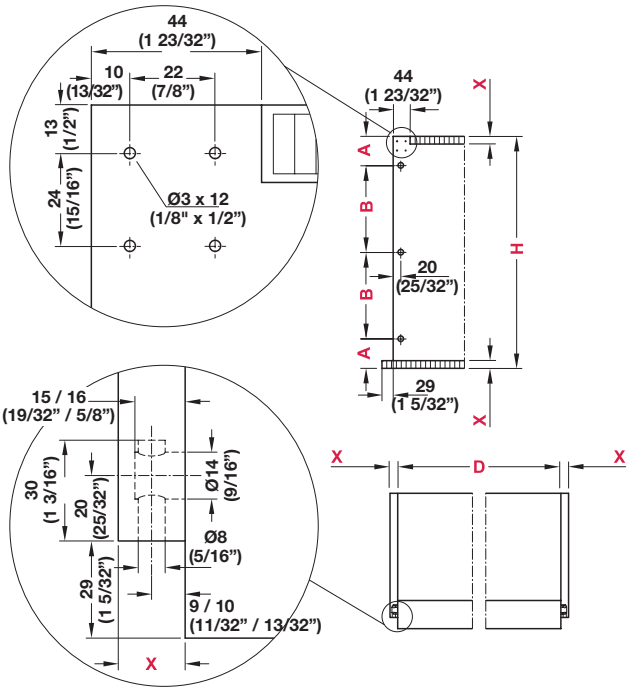

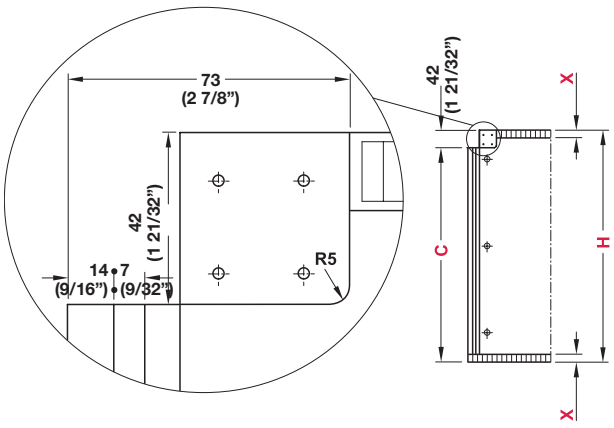

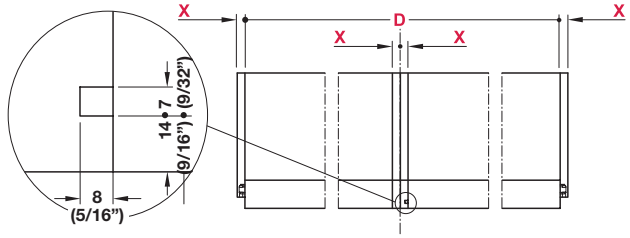

Center intermediate panel with door widths 1800 mm (70 7/8") and 2400 mm (94 1/2").

Dimensional data not binding. Dimensions in mm, inches are approximate. We reserve the right to alter specifications without notice.

Finetta F-Line 32 23A

Cabinet height H	Door height H1	H2	Door width (DW)	Side panel thickness 19 mm (3/4")	
				B1	B2
480 (18/78")	477 (18 3/4")	104.5 (4 1/8")	900 (35 7/16")	–	–
			1200 (47 1/4")		
			1800 (70 7/8")	733.5 (28 7/8")	817.5 (32 3/16")
			2400 (94 1/2")	1033.5 (40 11/16")	1117.5 (44")
600 (23 5/8")	597 (23 1/2")	224.5 (8 13/16")	900 (35 7/16")	–	–
			1200 (47 1/4")		
			1800 (70 7/8")	733.5 (28 7/8")	817.5 (32 3/16")
			2400 (94 1/2")	1033.5 (40 11/16")	1117.5 (44")

*These dimensions are only listed in milimeters.

Cabinet height H	A	B	C	Door width (DW)	D
480 (18 7/8")	80 (3 5/32")	160 (6 5/16")	–	900 (35 7/16")	863 (34")
			–	1200 (47 1/4")	1163 (45 13/16")
			438 (17 1/4")	1800 (70 7/8")	1763 (69 7/16")
			438 (17 1/4")	2400 (94 1/2")	2363 (93 1/16")
600 (23 5/8")	76 (3")	224 (8 13/16")	–	900 (35 7/16")	863 (34")
			–	1200 (47 1/4")	1163 (45 13/16")
			558 (21 15/16")	1800 (70 7/8")	1763 (69 7/16")
			558 (21 15/16")	2400 (94 1/2")	2363 (93 1/16")

Installation on cabinet

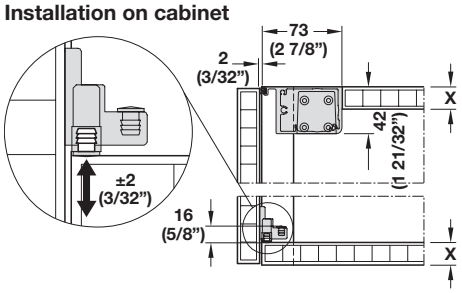

Adjustment of the closed door

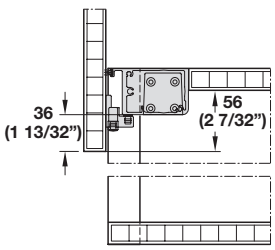

Open door

Cabinet height H	Door width (DW)	Door weight	Item No.
480 (18 7/8")	900 (35 7/16")	6–8 kg (13.2 –17.6 lbs.)	403.25.040
	1200 (47 1/4")	7–9 kg (15.4–19.8 lbs.)	403.25.050
	1800 (70 7/8")	10–12 kg (22–26.4 lbs.)	403.25.060
	2400 (94 1/2")	15–17 kg(33–37.4 lbs.)	403.25.070
600 (23 5/8")	900 (35 7/16")	6–8 kg (13.2 –17.6 lbs.)	403.25.041
	1200 (47 1/4")	10–12 kg (22–26.4 lbs.)	403.25.051
	1800 (70 7/8")	15–17 kg(33–37.4 lbs.)	403.25.061
	2400 (94 1/2")	21–23 (46.2–50.7 lbs.)	403.25.071

*The 480 mm (18 7/8") version is a special order and will have a longer lead time.

Supplied With
Supporting aluminium profile Ⓐ
Pair of extending sliding rails Ⓑ
Sliding rail for center intermediate panel (only for door widths 1800 mm (70 7/8") and 2400 (94 1/2") Ⓒ
Mounting hardware Ⓩ

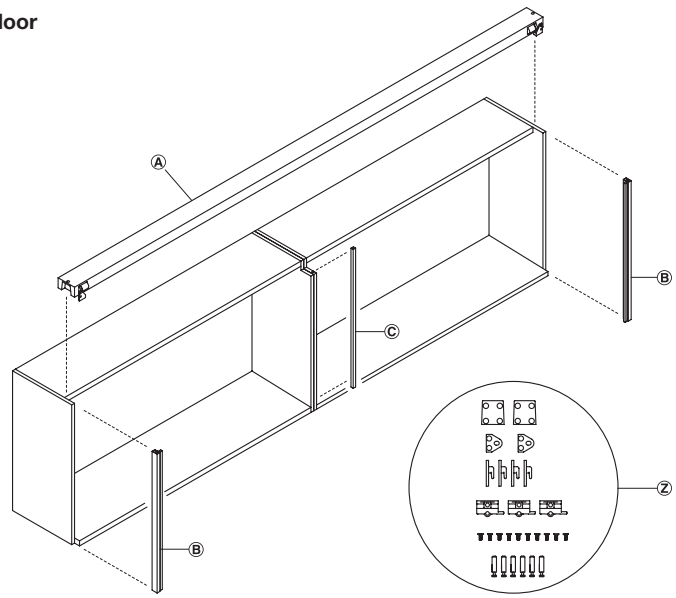

Dimensional data not binding. Dimensions in mm, inches are approximate. We reserve the right to alter specifications without notice.

Swingfront FB 20

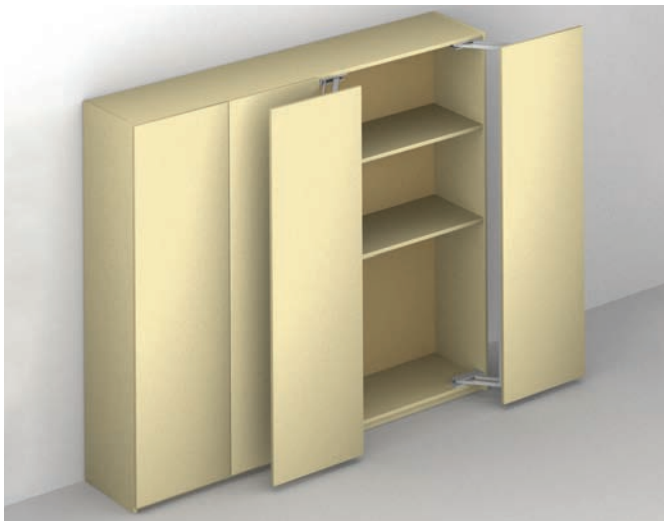

- > Door weight: max. 20 kg (44 lbs.)
- > Inside clearance width of cabinet: min. 398 or 475 mm (15 21/32" or 18 11/16")
- > Inside clearance height of cabinet: max. 2576 mm (8' 5 7/16")
- > Adjustment options: ±4 mm (5/32") vertical, ±2 mm (3/32") horizontal, ±2 mm (3/32") on the incline
- > Door wing swings to the front and side during opening
- > Use in straight cabinets or in corner solutions
- > With integrated soft closing mechanism
- > Material: Zinc Alloy, powder-coated; Finish: silver colored

soft&silent

→ Application

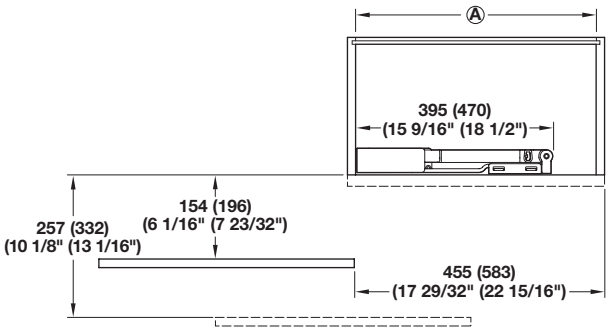

Single door, A Internal cabinet width
Dimensions without brackets = internal cabinet width min. 398 mm
Dimensions in brackets = internal cabinet width min. 475 mm

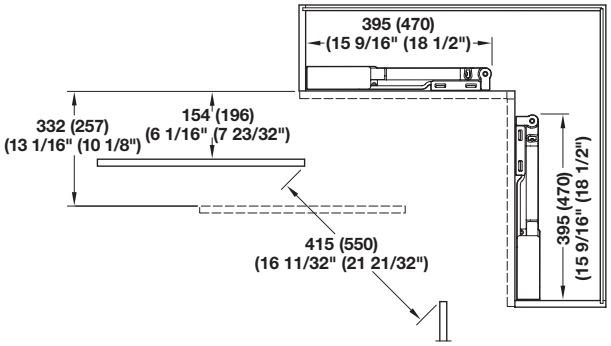

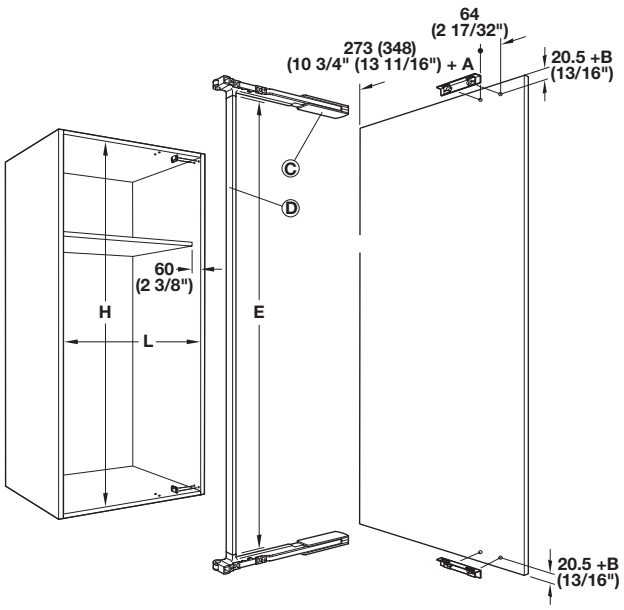

C Door opening mechanism, D Connecting bar
E = Connecting bar length = H – 76 mm (3") = H – 84 mm (3 5/16") when using fixing set
L = Internal cabinet width, H = Internal cabinet height

→ Corner Solution with Double Doors

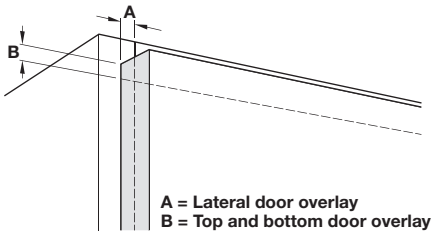

A = Lateral door overlay
B = Top and bottom door overlay

Dimensions without brackets = internal cabinet width min. 398 mm (15 21/32")
Dimensions in brackets = internal cabinet width min. 475 mm (18 11/16")

→ Drilling Pattern

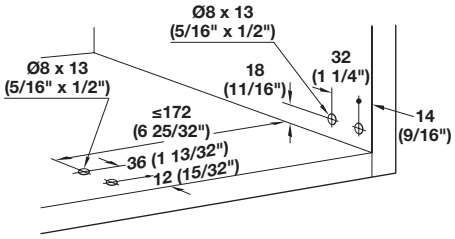

Dimensional data not binding. Dimensions in mm, inches are approximate. We reserve the right to alter specifications without notice.

Swingfront FB 20

→ Set

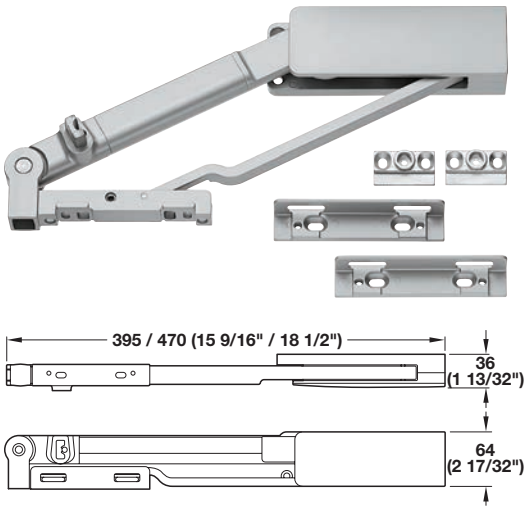

> With soft closing mechanism

Cabinet width	Max. door travel	Item No.
Min. 398 (15 21/32")	450 (17 23/32")	407.32.906
Min. 475 (18 11/16")	600 (23 5/8")	407.32.907

Supplied with
1 Pair of door opening mechanisms
2 Door mounting brackets

Note
Please order connecting bar and center hinge separately.

→ Connecting Bar

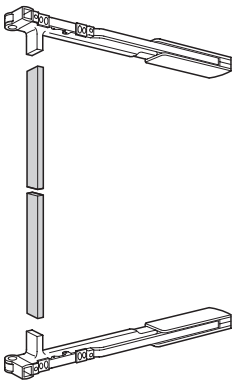

> Length: 2500 (98 7/16")
> Can be shortened
> Material: Aluminum, powder-coated

Finish	Item No.
silver colored	407.32.910

→ Center Hinge

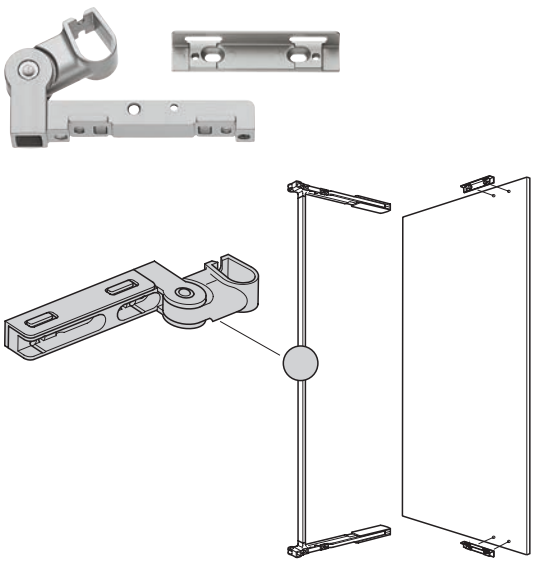

> For stabilizing the connecting bar with high doors
> Material: Zinc Alloy, powder-coated

Finish	Item No.
silver colored	407.32.930

→ Cabinet Fixing Set

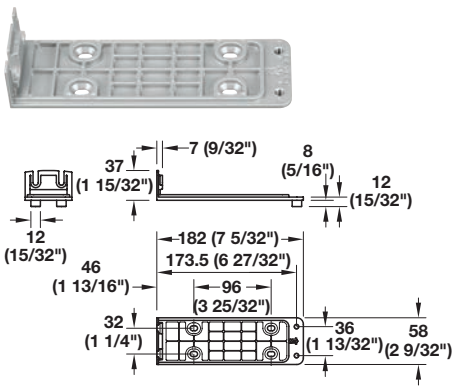

> For attaching the fitting to top panels and base panels with heavy loads and high leverage force
> Material: Zinc Alloy, powder-coated

Finish	Item No.
silver colored	407.32.940

Note
Several dimensions change when using the cabinet fixing set.
Please observe installation instructions.

Dimensional data not binding. Dimensions in mm, inches are approximate. We reserve the right to alter specifications without notice.

LIN-X800

- > Door weight (per door): max. 40 kg (88 lbs.)
- > Door thickness: 24–40 mm (15/16"–1 9/16")
- > Door height: max. 2400 or 2980 mm (94 1/2" or 117 5/16")
- > Door width: 750–850 mm (29 1/2"–33 7/16")
- > Door swings out laterally in a small radius compared to ordinary swing doors, ideal for tight spaces
- > Non handed
- > Adjustable in 4 directions: horizontal, vertical, depth, and parallel
- > Built-in dampers provide smooth soft closing movement
- > Ideal for closet entryways, large pantry doors, hidden rooms, etc.
- > Material: Aluminum/Steel

Note
Designed for overlay applications, but can be installed flush with cabinet or wall. For details contact customer service.

→ LIN-X800 Sets and Components

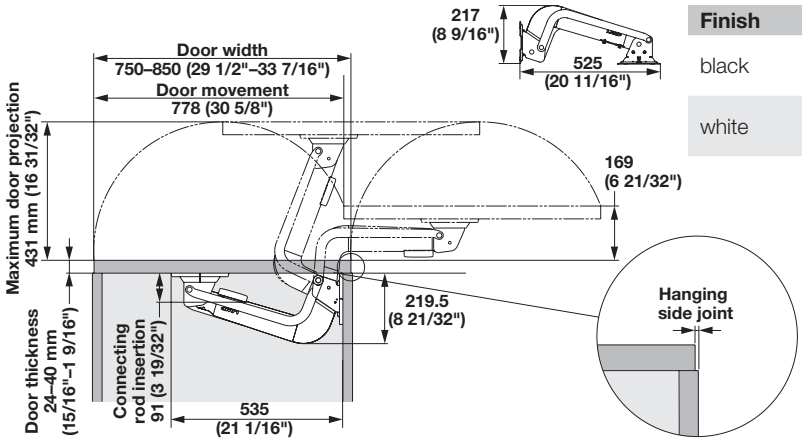

Finish	Height	Item No.
black	2400 (94 1/2")	409.43.711
	2980 (117 5/16")	409.43.713
white	2400 (94 1/2")	409.43.712
	2980 (117 5/16")	409.43.714

Dimensional data not binding. Dimensions in mm, inches are approximate. We reserve the right to alter specifications without notice.

LIN-X800

→ Detailed Drawing

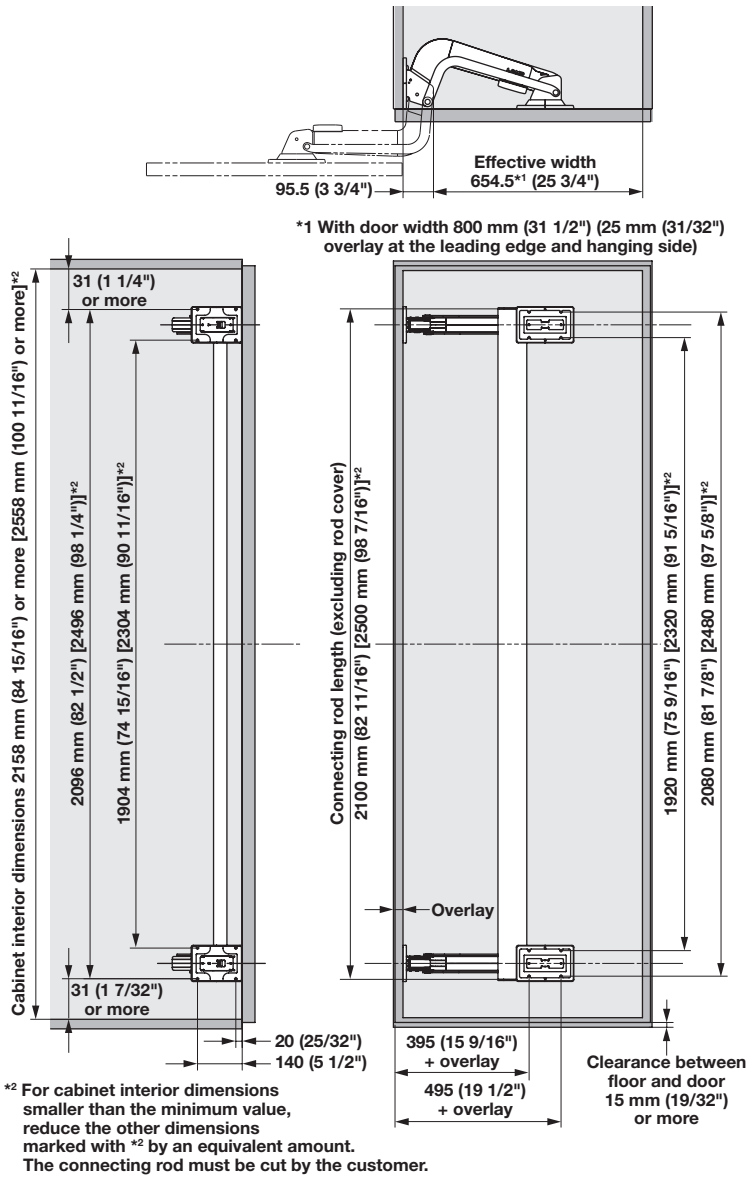

*2 For cabinet interior dimensions smaller than the minimum value, reduce the other dimensions marked with *2 by an equivalent amount. The connecting rod must be cut by the customer.

→ Installation Options

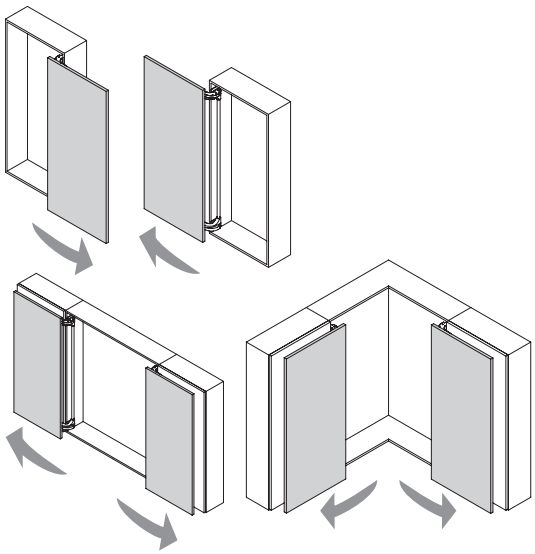

→ Adjustments

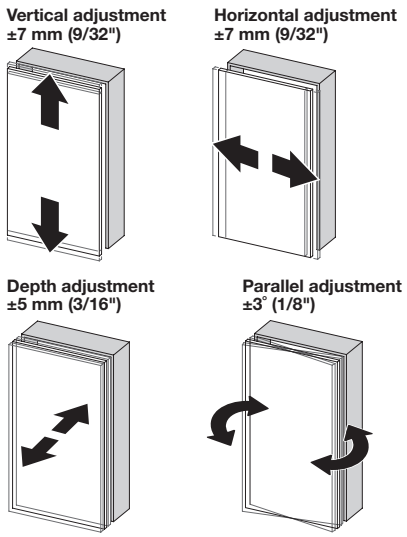

Dimensional data not binding. Dimensions in mm, inches are approximate. We reserve the right to alter specifications without notice.

WF/MF Systems

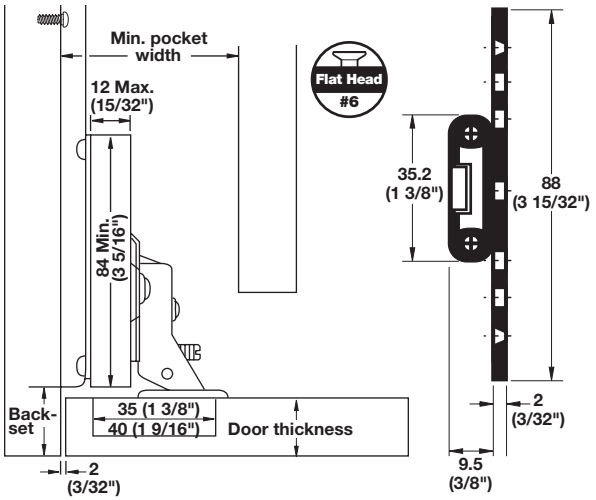

> Door thickness: max. 32 mm (1 1/4")
> Pocket width:
Door thickness: min. 16–22 mm (5/8"–7/8") = 45 mm (1 25/32")
Door thickness: min. 22–32 mm (7/8"–1 1/4") = 57 mm (2 1/4")
> Door height: WF System: max. 711 mm (28")
MF System: max. 813 mm (32")
> Recommended for entertainment systems, office furniture systems and institutional furniture, where the wood follower strip is finished to match the inside of the cabinet
> Material: Steel; Finish: black

Note
Customer selects metal follower or supplies wood follower. Metal follower, see next page. Components listed on next page are needed for each door.

→ Ball Bearing Slide

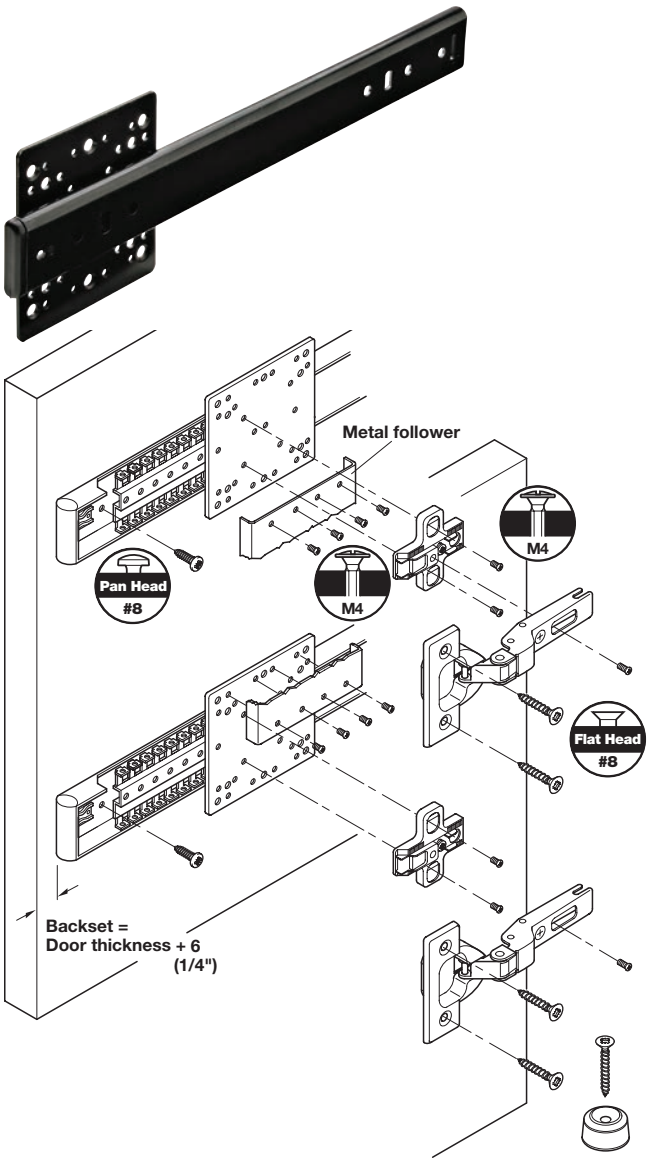

Length	Max. retraction	Item No.
305 (12")	222 (8 3/4")	408.10.302
454 (17 7/8")	374 (14 23/32")	408.10.455
554 (21 13/16")	474 (18 21/32")	408.10.553

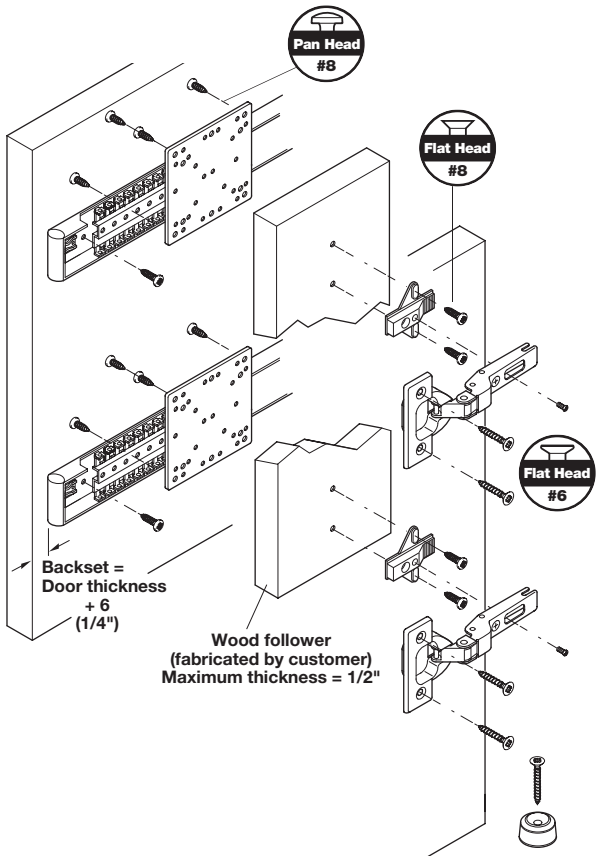

Flat head screws	pages 12.7–12.8, 12.10, 12.13
Pan head screws	pages 12.9–12.10
M4 screws	page 12.17

Dimensional data not binding. Dimensions in mm, inches are approximate. We reserve the right to alter specifications without notice.

WF/MF and RP 42/60

→ Hinge for MF Door

> 35 mm cup
> 8 mm crank
> For door thickness: 16–22 mm (5/8"–7/8")
> Material: Steel

Finish	Item No.
nickel-plated	329.31.502

→ Hinge for WF Door

> 35 mm cup
> Height adjustable
> For door thickness: 16–22 mm (5/8"–7/8")
> Material: Steel

Finish	Item No.
nickel-plated	329.31.500

→ Hinge - Thick Door

> 40 mm cup
> 1 mm crank
> For door thickness: 22–32 mm (7/8"–1 1/4")
> Material: Steel

Finish	Item No.
nickel-plated	329.05.632

→ Hinge - Overlay Application

> 40 mm cup
> 11 mm crank
> Overlay: max. 10 mm (3/8")
> For door thickness: 16–19 mm (5/8"–3/4")
> Material: Steel

Finish	Item No.
nickel-plated	329.05.614

→ Mounting Plate

> 35 mm cup
> Height adjustable
> Reinforcement: 3
> Material: Zinc

Finish	Item No.
nickel-plated	329.80.653

→ Mounting Plate

> 35 and 40 mm cup
> Height adjustable
> Reinforcement: 0
> Material: Zinc

Finish	Item No.
nickel-plated	329.80.626

→ Pivot Roller

> Ø: 20 x 12 mm (25/32" x 15/32")
> Material: Nylon

Color	Item No.
black	418.09.300

→ Metal Follower for MF System

> Door height: min. 610 mm (24")
> CTC hinges: 508 mm (20")
> Length: 457 mm (18")
> Material: Steel

Color	Item No.
black	408.18.326

Dimensional data not binding. Dimensions in mm, inches are approximate. We reserve the right to alter specifications without notice.

RP 42/60 System

> Door weight: max. 14 kg (30 lbs.)
> Door thickness: max. 32 mm (1 1/4")
> Door height: RP 42: max. 1067 mm (42")
RP 60: max. 1524 mm (60")
> Pocket width: Door thickness: min. 16–22 mm (5/8–7/8")
= 57 mm (2 1/4")
Door thickness: min. 22–32 mm (7/8–1 1/4")
= 67 mm (2 5/8")
> Material: Steel; Finish: black

→ Ball Bearing Slide

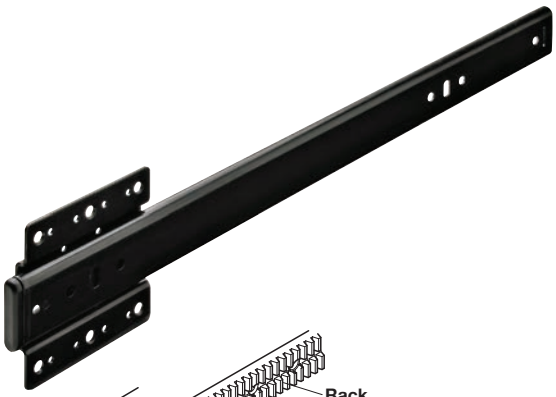

Length	Max. retraction	Item No.
305 (12")	222 (8 3/4")	408.11.309
356 (14")	274 (10 3/4")	408.11.354
406 (16")	324 (12 3/4")	408.11.407
457 (18")	374 (14 3/4")	408.11.452
508 (20")	424 (16 3/4")	408.11.505
559 (22")	474 (18 3/4")	408.11.550
610 (24")	524 (20 3/4")	408.11.603

Note
Components listed on pages **7.111** and **7.113** are needed for each door.

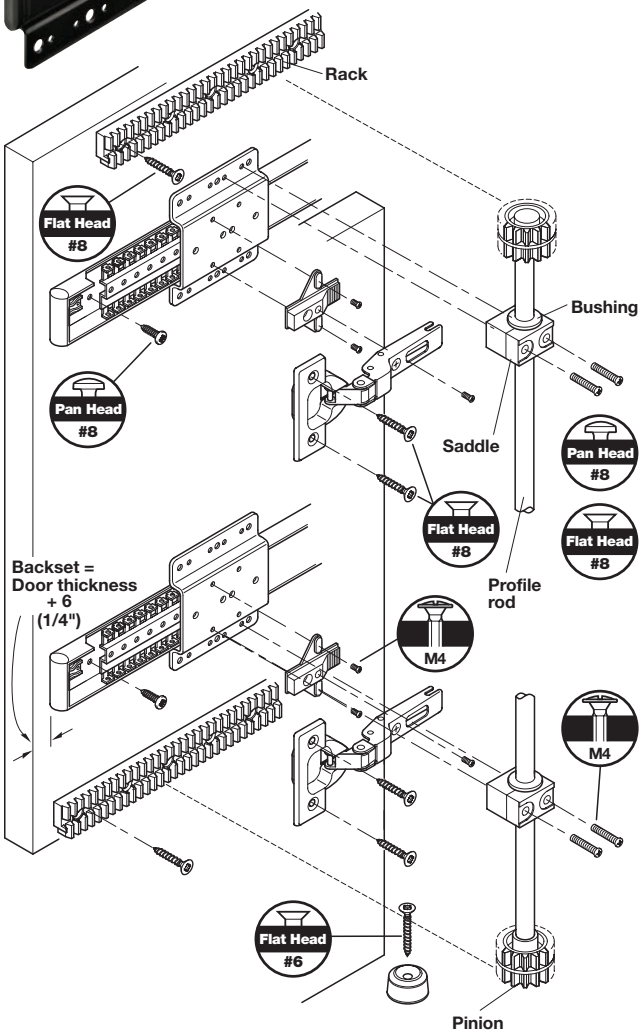

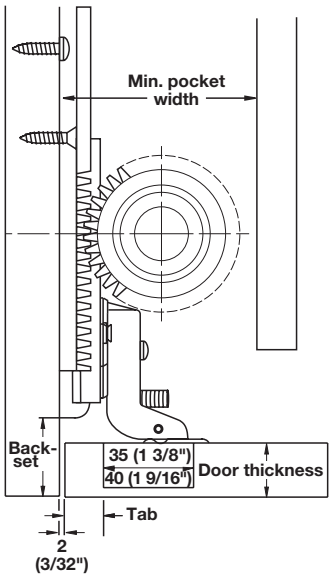

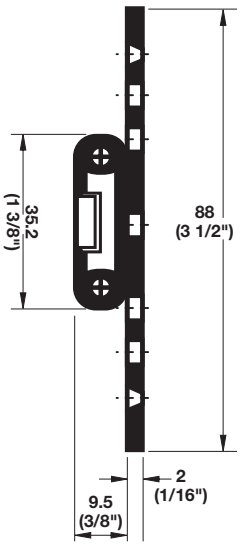

Hinges	page 7.111
Flat head screws	pages 12.7–12.8, 12.10, 12.13
Pan head screws	pages 12.9–12.10
M4 screws	page 12.17

Dimensional data not binding. Dimensions in mm, inches are approximate. We reserve the right to alter specifications without notice.

RP 42/60 Components

→ Pinion Wheel

> Material: PVC

Color	Item No.
black	408.14.382

→ Saddle and Bushing

> Material: PVC

Color	Item No.
black	408.14.390

→ Rack

> Length: 532 mm (21")
> Material: PVC

Color	Item No.
black	408.14.337

→ Profile Rod

> Material: Steel; Finish: nickel-plated

Version	Length	Item No.
RP 42	1100 (43 5/16")	226.67.116
RP 60	1600 (63")	226.67.161

→ Pivot Roller

> Ø: 20 x 12 mm (25/32" x 15/32")
> Material: Nylon

Color	Item No.
black	418.09.300

Hinges and mounting plates page 7.111

Dimensional data not binding. Dimensions in mm, inches are approximate. We reserve the right to alter specifications without notice.

RP 42

Service+

→ Complete Set

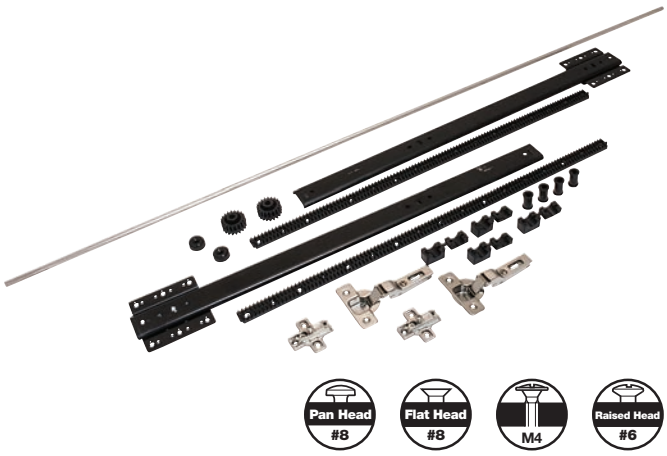

> Door height: min. 813 (32"); max. 1067 (42")
> For inset door thickness: 16–22 mm (5/8"–7/8")
> Uses 35 mm hinges

Slide length	Item No.
356 (14")	408.20.102
406 (16")	408.20.111
457 (18")	408.20.120
508 (20")	408.20.139
559 (22")	408.20.148
610 (24")	408.20.157

Supplied With
2 Ball bearing slides
1 Profile rod 1100 mm (43 5/16")
2 35 mm hinges
2 Mounting plates
2 Pinions
4 Saddles & bushings
2 Racks
2 Pivot rollers
8 Slide screws (Pan head #8)
12 Hinge and rack screws (Flat head #8)
4 Hinge mounting plate screws (M4)
8 Saddle & bushing screws (M4)
2 Pivot roller screws (Raised flat head #6)

Note
For thick doors 22–32 mm (7/8"–1 1/4") use the 40 mm hinge, Item No. 329.05.632, and 40 mm mounting plate, Item No. 329.80.626.
For overlay applications; Door thickness from 16–19 mm (5/8"–3/4"). Maximum overlay = 10 mm (3/8") use the 40 mm overlay hinge, Item No. 329.05.614, and 40 mm mounting plate, Item No. 329.80.626.

Dimensional data not binding. Dimensions in mm, inches are approximate. We reserve the right to alter specifications without notice.

RP 60

Service+

→ Complete Set

> Door height: min. 1067 (42"); max. 1524 (60")
> For inset door thickness: 16–22 mm (5/8"–7/8")
> Uses 35 mm hinges

Slide length	Item No.
356 (14")	408.20.200
406 (16")	408.20.219
457 (18")	408.20.228
508 (20")	408.20.237
559 (22")	408.20.246
610 (24")	408.20.255

Supplied With
3 Ball bearing slides
1 Profile rod 1600 mm (63")
3 35 mm hinges
3 Mounting plates
2 Pinions
6 Saddles & bushings
2 Racks
2 Pivot rollers
12 Slide screws (Pan head #8)
14 Hinge and rack screws (Flat head #8)
6 Hinge mounting plate screws (M4)
12 Saddle & bushing screws (M4)
2 Pivot roller screws (Raised flat head #6)

Note
For thick doors 22–32 mm (7/8"–1 1/4") use the 40 mm hinge, Item No. 329.05.632, and 40 mm mounting plate, Item No. 329.80.626.
For overlay applications; Door thickness from 16–19 mm (5/8"–3/4"). Maximum overlay = 10 mm (3/8") use the 40 mm overlay hinge, Item No. 329.05.614, and 40 mm mounting plate, Item No. 329.80.626.

Dimensional data not binding. Dimensions in mm, inches are approximate. We reserve the right to alter specifications without notice.

Accuride

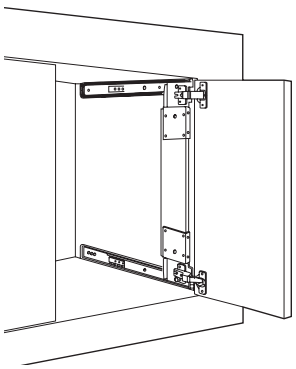

> Weight capacity: max. 13.6 kg (30 lbs.)
> Door thickness: min. 16 mm (5/8")
> Door thickness: max. 32 mm (1 1/4")
> Vertical doors H x W: max. 1067 x 610 mm (42" x 24")
> Horizontal doors H x W: max. 1067 x 610 mm (42" x 24")
> Wood follower strip is provided by the customer
> Cut follower strip is 152 mm (6") shorter than door height
> Maximum thickness for follower strip is 19 mm (3/4")
> For concealed doors in entertainment centers, wall units, and cabinets
> Detent out
> Material: Steel; Finish: zinc/black

→ 123/1234

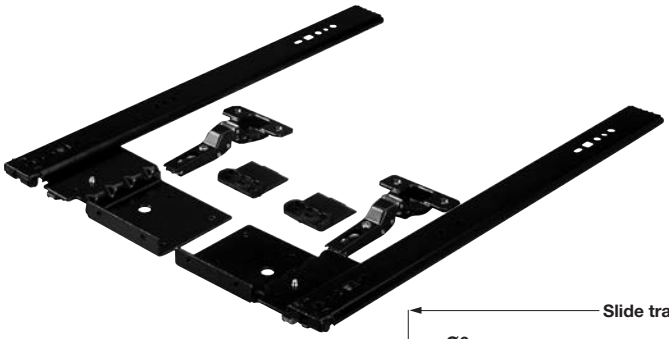

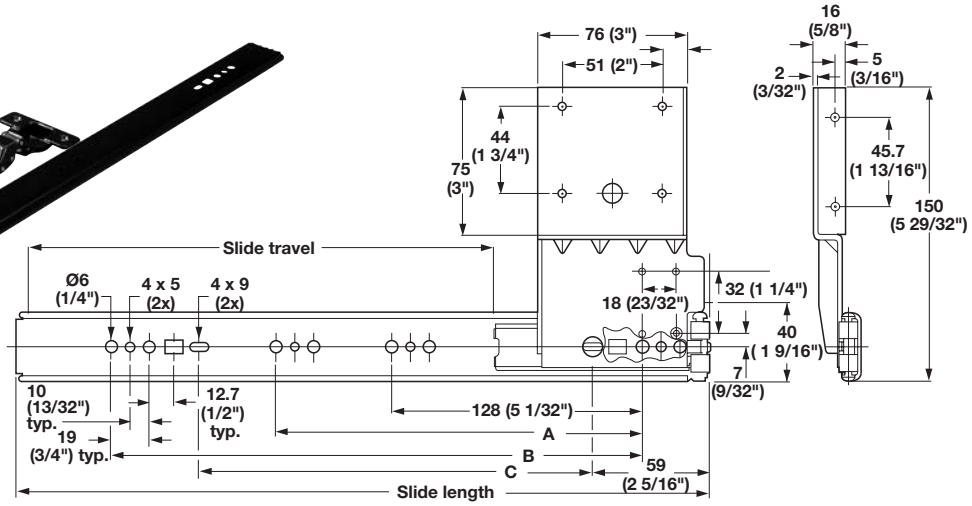

Length	Travel	A	B	C	123 – with 35 mm hinges	1234 – hinges not included
12" (303)	7 3/8" (188)	–	8 13/16" (224)	6 1/16" (154)	408.36.331	408.35.332
14" (354)	9 7/16" (239)	–	8 13/16" (224)	6 1/16" (154)	408.36.336	408.35.337
16" (405)	11 7/16" (290)	–	12 5/8" (320)	9 13/16" (250)	408.36.341	408.35.342
18" (456)	13 3/8" (340)	–	13 7/8" (352)	11 1/8" (282)	408.36.346	408.35.347
20" (506)	15 3/8" (391)	–	16 3/8" (416)	13 5/8" (346)	408.36.351	408.35.352
22" (557)	17 3/8" (442)	13 7/8" (352)	18 7/8" (480)	16 1/8" (410)	408.36.356	408.35.357
24" (608)	19 7/16" (493)	13 7/8" (352)	18 7/8" (480)	16 1/8" (410)	408.36.361	408.35.362
26" (659)	21 3/8" (543)	13 7/8" (352)	21 7/16" (544)	18 11/16" (474)	408.36.366	408.35.367
28" (710)	23 3/8" (594)	13 7/8" (352)	23 15/16" (608)	21 3/16" (538)	408.36.371	408.35.372

123 Supplied With
Hinge kit
2 Slides
2 Pivot blocks
Mounting hardware

1234 Supplied With
2 Slides
2 Pivot blocks
Mounting hardware

Dimensional data not binding. Dimensions in mm, inches are approximate. We reserve the right to alter specifications without notice.

Accuride 1234 Accessories

Hinge Kit

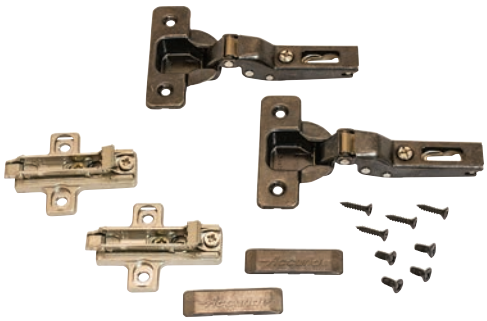

> For inset frameless application/overlay face frame application
> For doors thickness up to: 20 mm (13/16")
> 35 mm cup
> Material: Steel; Finish: zinc-plated/black

Version	Item No.
Inset frameless	408.24.030
Overlay face frame	

Supplied With
2 Hinges
2 Base plates
Mounting hardware

Inset Frameless Application

Open Position

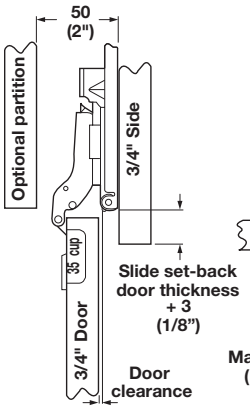

Closed Position

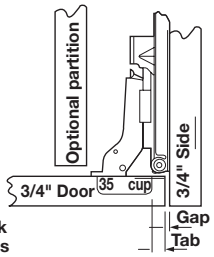

Maximum tab = 8 (5/16")
(19 {3/4"} thick door)

Overlay Face Frame Application

Open Position

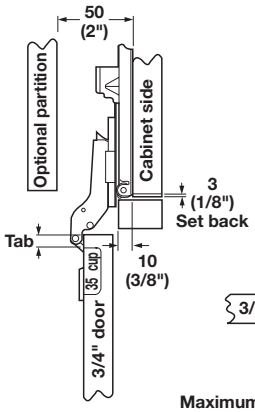

Closed Position

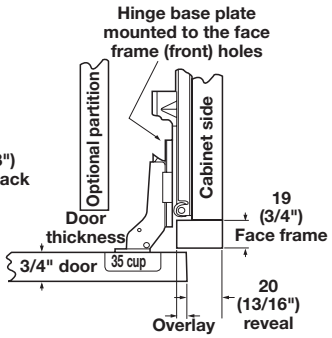

Maximum tab = 8 (5/16")
overlay = 9 (3/8")
(19 {3/4"} thick door)

Dimensional data not binding. Dimensions in mm, inches are approximate. We reserve the right to alter specifications without notice.

Accuride 1234 Accessories

→ Hinge Kit

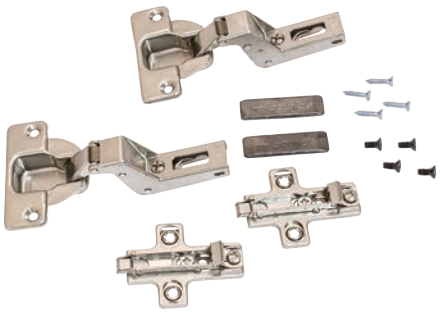

Open Position Closed Position

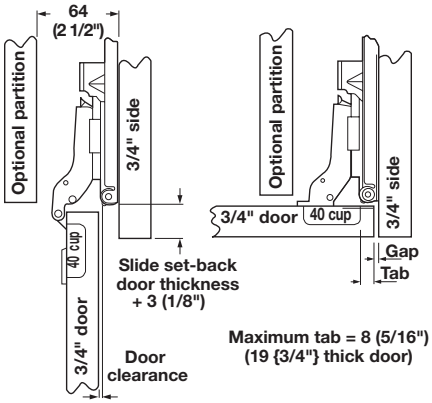

> For inset application for frameless cabinets
> For door thickness from: 19–32 mm (3/4"–1 1/4")
> 40 mm cup hinge
> Material: Steel

Finish	Item No.
zinc-plated	408.24.031

Supplied With
2 Hinges
2 Base plates
Mounting hardware

→ Hinge Kit

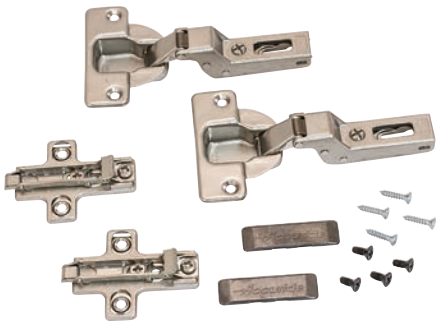

Open Position Closed Position

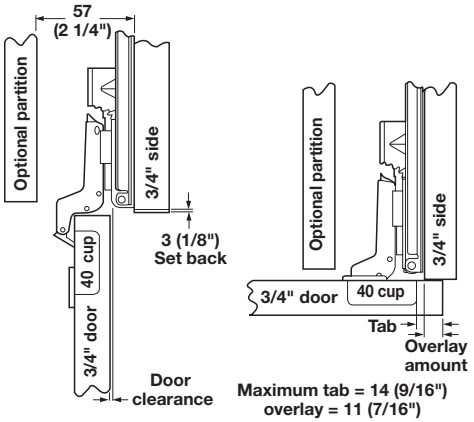

> For overlay application for frameless cabinets
> For door thickness up to: 20 mm (13/16")
> 40 mm cup hinge
> Material: Steel

Finish	Item No.
zinc-plated	408.24.032

Supplied With
2 Hinges
2 Base plates
Mounting hardware

Dimensional data not binding. Dimensions in mm, inches are approximate. We reserve the right to alter specifications without notice.

Accuride

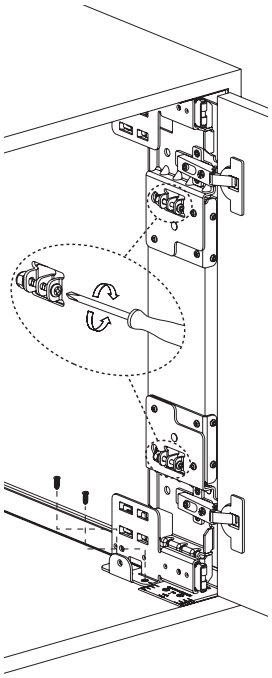

- > Weight capacity: max. 13.6 kg (30 lbs.)
- > Vertical door sizes: max. 1067 mm (42") high
- > Overlay: max. 19 mm (3/4")
- > Door stile width: min. of 64 mm (2 1/2") is required
- > Horizontal doors H x W: max. 1067 x 610 mm (42" x 24")
- > Slide rollers run across the back of the doors allowing for the use of sculptured doors, applied moldings, or raised panels
- > Auto open feature pushes cabinet doors open the final 32 mm (1 1/4")
- > Hardwood is recommended for the follower (customer supplied)
- > Follower length is the interior opening height minus 279 mm (11")
- > Anti-sag adjustment feature allows for the vertical adjustment of the door, assuring smooth opening and closing
- > Material: Steel; Finish: zinc/black

Door thickness	Max. overlay amount
19 (3/4")	19 (3/4")
22 (7/8")	16 (5/8")
26 (1")	12 (1/2")
32 (1 1/4")	6 (1/4")
38 (1 1/2")	Inset

→ CB 1321 Pro Pocket™

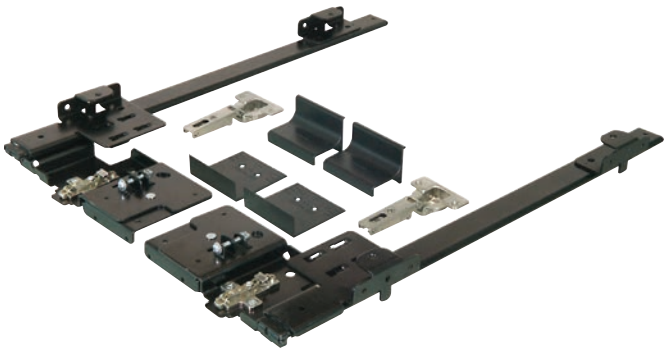

Length	Travel	A	Item No.
303 (12")	188 (7 3/8")	102 (4")	408.35.373
354 (14")	239 (9 7/16")	152 (6")	408.35.374
405 (16")	290 (11 7/16")	203 (8")	408.34.341
456 (18")	340 (13 3/8")	254 (10")	408.34.346
506 (20")	391 (15 3/8")	305 (12")	408.34.351
557 (22")	442 (17 3/8")	356 (14")	408.34.356
608 (24")	493 (19 7/16")	406 (16")	408.34.361
659 (26")	544 (21 7/16")	457 (18")	408.34.366
710 (28")	594 (23 3/8")	508 (20")	408.34.371

Supplied With
2 Slides with attached base plate, 2 Hinges and plates, Skid blocks, Cover, Mounting screws, Installation instructions

Overlay Application

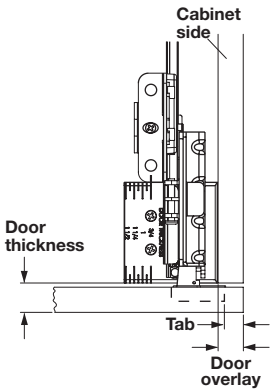

Inset Application

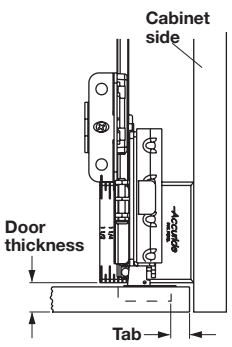

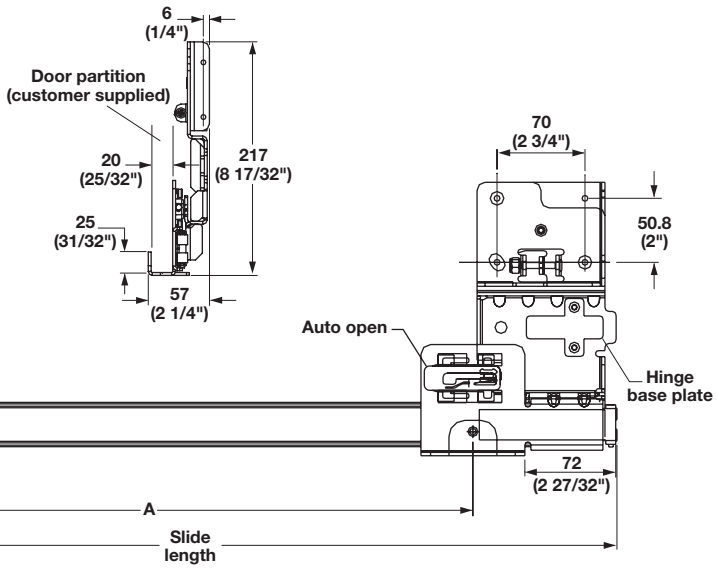

Dimensional data not binding. Dimensions in mm, inches are approximate. We reserve the right to alter specifications without notice.

Häfele Slido F-Park 71 16A

- > Especially suited for use in larger door cabinets such as home theater applications
- > For use with doors up to H x W: 1524 x 610 mm (60" x 24")
- > Weight capacity: 15.8 kg (35 lbs.)
- > Accommodates doors up to 32 mm (1 1/4") thick
- > Jigs or fixtures are not required to locate slide top and bottom, integral location tabs locate slides in cabinet
- > Adjustment screws allow maximum adjustability, cable tensioning adjustment is located at the slide front
- > Easily accessible from front of cabinet
- > Steel cable is black nylon coated to reduce friction and enhance appearance
- > Cable runs parallel with slide to ensure smooth operation, eliminating excess pressure on slide
- > Positive out-stop on slide keeps door in alignment in closed position
- > Soft rubber roller on slide front protects door front from scratches and marring
- > Minimal installation and adjustment time for lower production costs
- > 32 mm compatible
- > Patent pending
- > With cables attached
- > Travel distance = slide length - 114 mm (4 1/2")
- > Material: Steel/Zinc-electroplated/Plastic
  Cable: Steel, nylon-coated; Finish: black

→ Slides

Length	Travel	Item No.
408 (16 1/16")	294 (11 9/16")	408.24.315
440 (17 5/16")	326 (12 13/16")	408.24.324
504 (19 13/16")	390 (15 3/8")	408.24.333
536 (21 1/8")	422 (16 5/8")	408.24.342
600 (23 5/8")	486 (19 1/8")	408.24.351
664 (26 1/8")	550 (21 5/8")	408.24.360

Note
Accessory pack required to complete assembly, see next page.

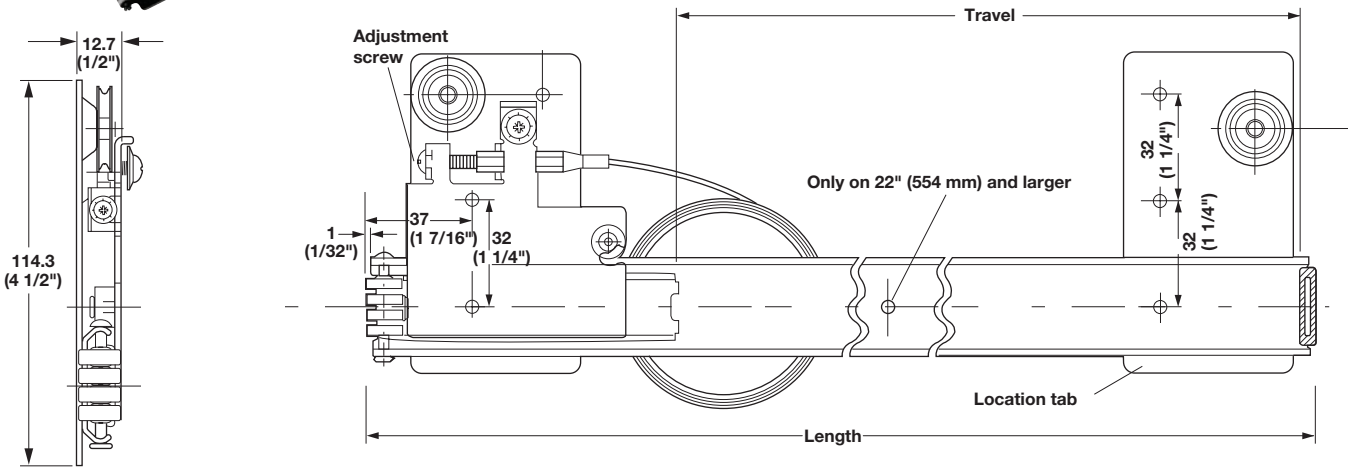

Dimensional data not binding. Dimensions in mm, inches are approximate. We reserve the right to alter specifications without notice.

Häfele Slido F-Park 71 16A Accessories

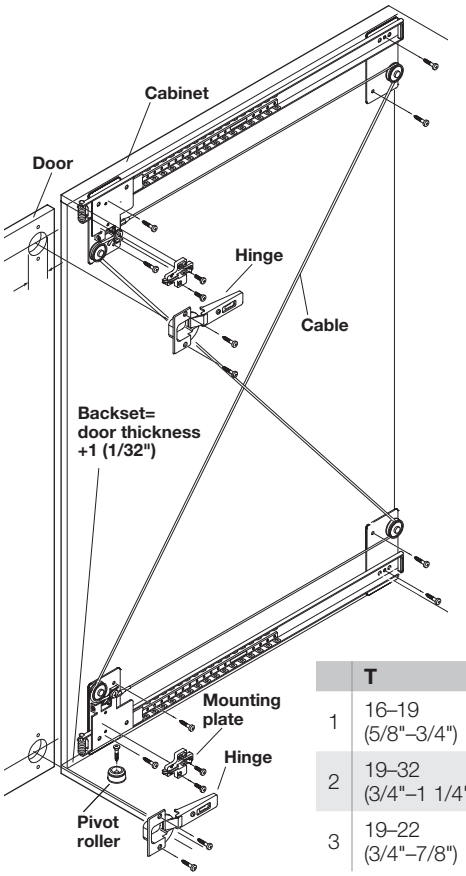

	T	X	Y
1	16–19 (5/8"–3/4")	45 (1 3/4")	T + 1 (1/32")
2	19–32 (3/4"–1 1/4")	64 (2 1/2")	T + 1 (1/32")
3	19–22 (3/4"–7/8")	50 (2")	1 (1/32")

→ Inlay Door Accessory Pack

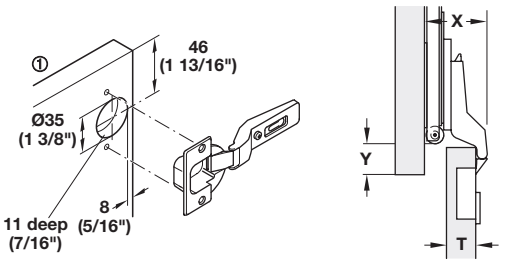

> 35 mm (1 3/8")
> For door thickness: 16–19 mm (5/8"–3/4")

Version	Item No.
self-closing	408.24.020
free-swinging	408.24.050

Supplied With
Mounting instructions
4 020.05.211 – M4 x 5 mm – Hinge plate mounting screws
4 015.55.639 – 3.5 x 15 mm – Hinge mounting screws
2 418.09.300 – Pivot roller
2 015.31.675 – Pivot roller mounting screw
10 013.03.304 – Slide mounting screws
2 329.31.502 – 94°, 35 mm cup hinge, self-closing, or
2 329.31.002 – 94°, 35 mm cup hinge, free swinging
2 329.71.503 – Clip mounting plate, with single screw adjustment

→ Inlay Door Accessory Pack

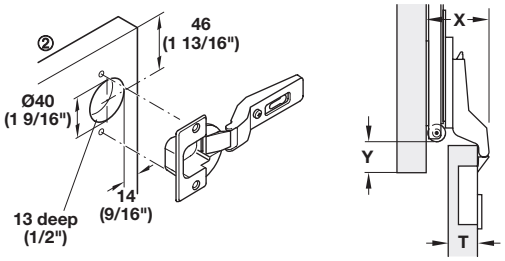

> 40 mm (1 9/16")
> For door thickness: 19–32 mm (3/4"–1 1/4")

Version	Item No.
self-closing	408.24.002
free-swinging	408.24.004

Supplied With
Mounting instructions
4 020.05.211 – M4 x 5 mm – Hinge plate mounting screws
4 015.55.639 – 3.5 x 15 mm – Hinge mounting screws
2 418.09.300 – Pivot roller
2 015.31.675 – Pivot roller mounting screw
10 013.03.304 – Slide mounting screws
2 329.05.632 – 94°, 40 mm cup hinge, self-closing, or
2 329.04.635 – 94°, 40 mm cup hinge, free swinging
2 329.71.500 – Clip mounting plate, with single screw adjustment

→ Overlay Door Accessory Pack

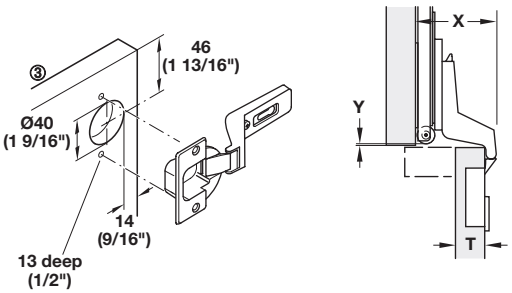

> 40 mm (1 9/16")
> For door thickness: 19–22 mm (3/4"–7/8")
> Maximum overlay: 7 mm (1/4")

	Item No.
	408.24.011

Supplied With
Mounting instructions
4 020.05.211 – M4 x 5 mm – Hinge plate mounting screws
4 015.55.639 – 3.5 x 15 mm – Hinge mounting screws
2 418.09.300 – Pivot roller
2 015.31.675 – Pivot roller mounting screw
10 013.03.304 – Slide mounting screws
2 329.05.614 – 94°, 40 mm cup hinge, self-closing
2 329.71.500 – Clip mounting plate, with single screw adjustment

Note
When using free swinging hinges it is recommended to use catches.

Dimensional data not binding. Dimensions in mm, inches are approximate. We reserve the right to alter specifications without notice.

Accuride

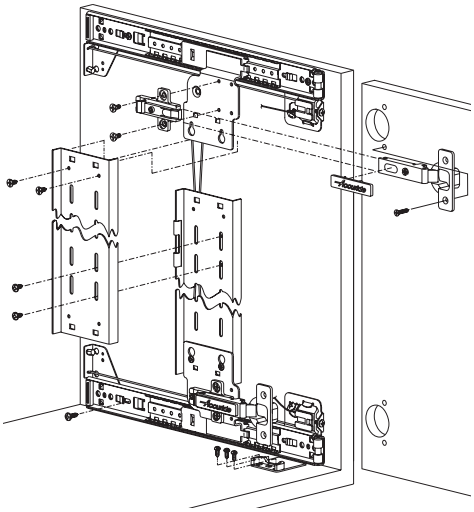

> Weight capacity: max. 34 kg (75 lbs.)
> Door thickness: 19–32 mm (3/4"–1 1/4")
> Door height: up to 1981 mm (78")
(for doors 914–1981 mm (36"–78") tall, see below for additional hinges required)
> Door width: max. 660 mm (26")
> Pocket width: 51–64 mm (2"–2 1/2") depending on door thickness
> Vertically mounted concealed doors
> Entertainment centers, audio-visual conference centers
> Anti-Rak Cable System
> Detent-out, silenced open and close
> Material: Steel; Finish: black

Note
For doors 21 mm (13/16") or thicker, please order 1432 and the optional 40 mm hinge kit.

→ 1332/1432

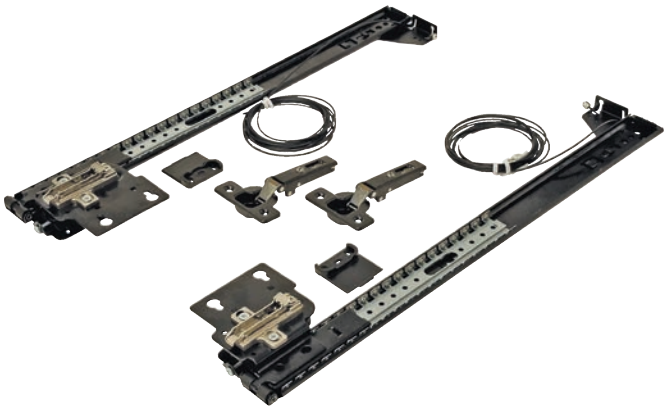

Slide length	Slide travel	1332 with 35 mm hinges	1432 without hinges
305 (12")	8 1/4" (210)	408.24.430	408.24.530
356 (14")	10 1/4" (261)	408.24.435	408.24.535
406 (16")	12 5/16" (312)	408.24.441	408.24.541
457 (18")	13 1/2" (343)	408.24.446	408.24.546
508 (20")	15 1/2" (394)	408.24.451	408.24.551
559 (22")	17 1/2" (445)	408.24.456	408.24.556
610 (24")	19 1/2" (496)	408.24.461	408.24.561
660 (26")	21 1/2" (546)	408.24.466	408.24.566
711 (28")	23 1/2" (597)	408.24.471	408.24.571
762 (30")	25 1/2" (648)	408.24.476	408.24.576
813 (32")	27 1/2" (699)	408.24.481	408.24.581

1332 Supplied With
Hinge kit, Slide mounting hardware kit, Mounting instructions

1432 Supplied With
Slide mounting hardware kit, Mounting instructions

Note
Maximum 19 mm (3/4") door thickness.
Requires 0 mm mounting plate - 329.71.500 (order separately).

1432 Overlay Application

Open Position

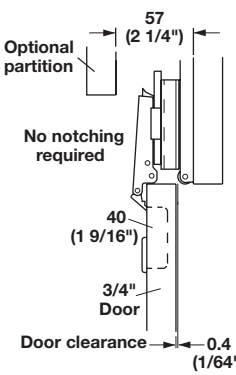

Closed Position
8 mm (5/16") Reveal

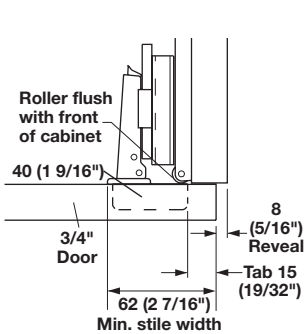

Flush Inset Application

Open Position

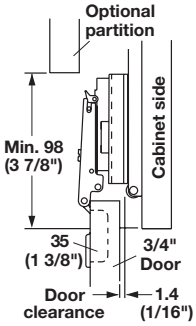

Closed Position

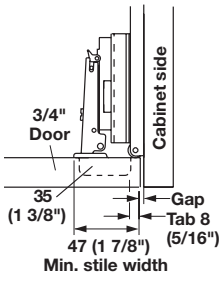

Alternative Method
12.7 mm (1/2") Overlay
6 mm (1/4") Reveal

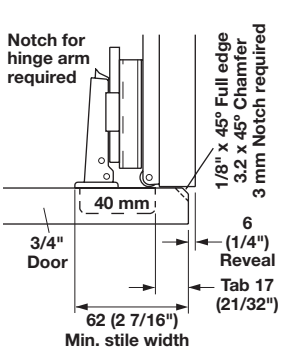

Dimensional data not binding. Dimensions in mm, inches are approximate. We reserve the right to alter specifications without notice.

Accuride 1332/1432 Accessories

Door height	Number of hinges needed per door
915–1193 (36"–47")	3
1194–1500 (47"–59")	4
1499–1803 (59"–71")	5
1803–1981 (71"–78")	6

Note
Order the proper number of kits per door based on door height.

→ Hinge Kit

> 35 mm (1 3/8")
> For inset 19 mm (3/4") thick doors
> Material: Steel

Finish	Item No.
black	408.27.070
zinc	408.24.071

Supplied With
2 Hinges
2 Mounting plates
2 Spacers
4 Wood screws

→ Hinge Carrier Strip Kit

> Required for all doors 914–1981 mm (36"–78") in height
> Material: Steel

Finish	Item No.
black	408.24.060
zinc	408.24.061

Supplied With
2 Hinge carrier strips
3 Connector clips
Mounting screws

Note
Order 2 Hinge Carrier Strip Kits per 2 doors for heights of 914–1422 mm (36"–56"), and 3 kits for doors 1422–1981 mm (56"–78").

→ Hinge Kit

> 40 mm (1 9/16")
> Material: Steel; Finish: zinc

Version	Item No.
11 mm (7/16") overlay for doors up to 19 mm (3/4")	408.24.075
Inset for doors 21–32 mm (13/16"–1 1/4")	408.24.074

Supplied With
2 Hinges
2 Mounting plates
2 Spacers
4 Wood screws

→ Connector Clip Kit

> Material: Stainless steel

	Item No.
	408.24.062

Supplied With
Clip
2 #8 x 3/8" pan head screws
2 #8 x 5/8" flat head screws

Note
Use 1 Connector Clip at each joint of carrier strip and 1 for every hinge mounted on the carrier strip. They are not required for the hinge mounted directly to the slide. For 2 doors 1499–1803 mm (59"–71") order 1 Connector Clip Kit. For 2 doors 1803–1981 mm (71"–78") order 3 Connector Clip Kits.

Dimensional data not binding. Dimensions in mm, inches are approximate. We reserve the right to alter specifications without notice.

Finetta F-Park71 30A

> Door weight (per door): max. 30 kg (66 lbs.)
> Door thickness: 19–30 mm (3/4"–1 3/16")
> Door width: 400–900 mm (15 3/4"–35 7/16")
> Door height: 1333–2530 mm (52 1/2"–99 5/8")
Height with roller kit: min. 1359 mm (53 1/2")
> Door vertical adjustment: +4/-1 (+5/32"/-1/32")
> Door horizontal adjustment: ±2 mm (3/32")
> Door front adjustment: ±4 mm (5/32")
> Assisted positive opening
> Smooth and noiseless movement
> Soft closing movement while sliding the door in and out

→ Pocket Door Kit

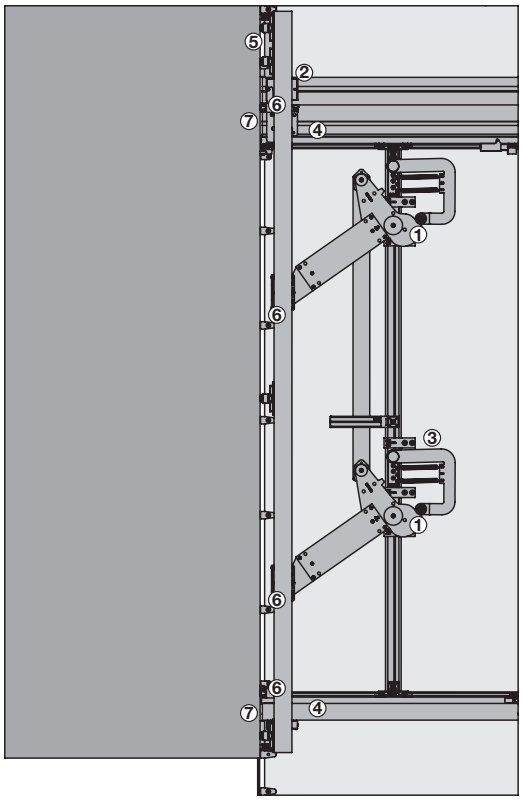

1 Patented cam movement assists with door opening and closing
2 Magnetic buffer for soft insertion
3 Pre-assembled mechanism clip-mounts for quick and easy installation and removal from the front of the cabinet
4 Sliding profile
5 Quick mount hinges
6 Three-way adjustment facility
7 Profile cover caps

Note
For pricing and availability, please complete the Slido F-Park71 order form found on our web site at:
https://www.hafele.com/us/en/info/services/hafele-to-order/2569/
or contact customer service at 1-800-423-3531 for assistance.

→ Calculating the minimum cabinet dimensions

Installed Depth "B"	370–400 (14 9/16"–15 3/4")		401–500 (15 13/16"–19 11/16")		501–600 (23 11/16"–23 5/8")		601–700 (23 11/16"–27 9/16")		701–800 (27 5/8"–31 1/2")		801–900 (31 9/16"–35 7/16")	
	Min.	Max.	Min.	Max.	Min.	Max.	Min.	Max.	Min.	Max.	Min.	Max.
Door Height "D"	1333 (52 1/2")	1575 (62")	–	–	–	–	–	–	–	–	–	–
	–	–	1576 (62 1/16")	1726 (67 15/16")	1698 (66 7/8")	1787 (70 3/8")	1820 (71 5/8")	1909 (75 3/16")	–	–	–	–
	–	–	1727 (68")	2121 (83 1/2")	1788 (70 3/8")	2182 (85 7/8")	1910 (75 3/16")	2243 (88 5/16")	2032 (80")	2304 (90 11/16")	2154 (84 13/16")	
	–	–	2122 (83 9/16")	2530 (99 5/8")	2183 (85 15/16")	2530 (99 5/8")	2244 (88 3/8")	2530 (99 5/8")	2305 (90 3/4")	2530 (99 5/8")	2366 (93 1/8")	2530 (99 5/8")

Dimensional data not binding. Dimensions in mm, inches are approximate. We reserve the right to alter specifications without notice.

Finetta F-Park71 30A

Cabinet Depth < Door Width

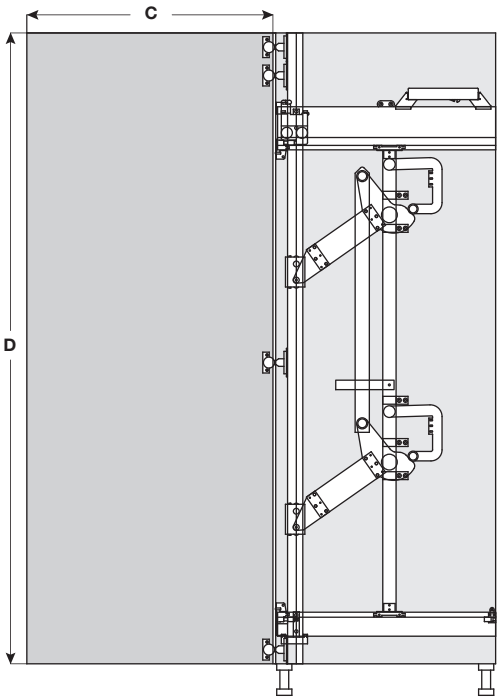

Cabinet Depth ≥ Door Width

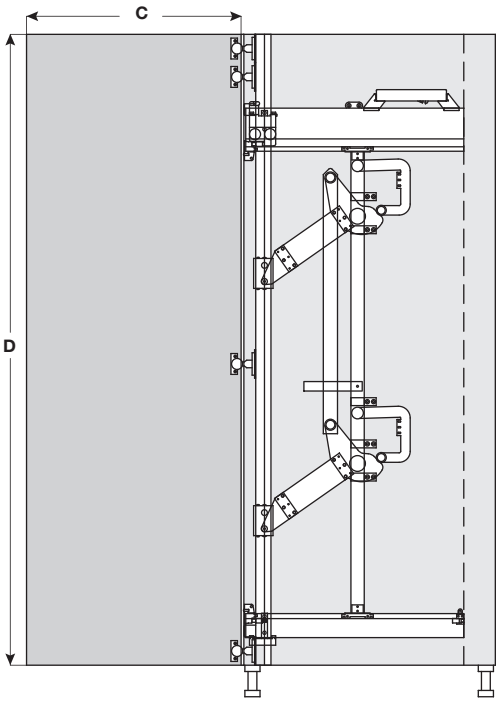

Calculation of door protrusion for two single doors sharing a pocket

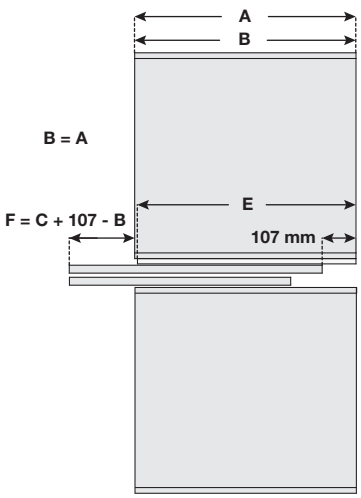

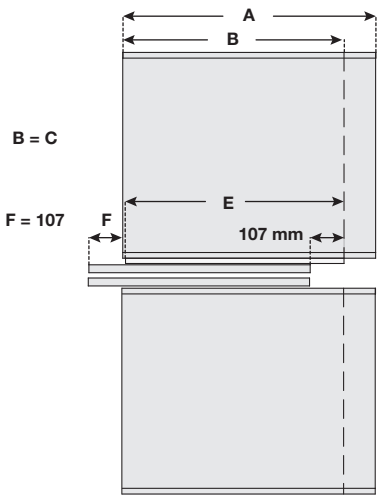

Calculation of door protrusion for a single door inside a pocket

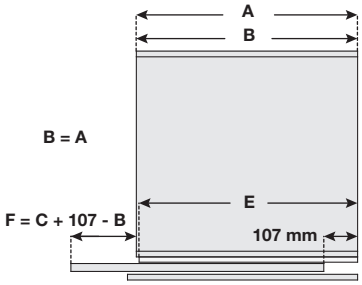

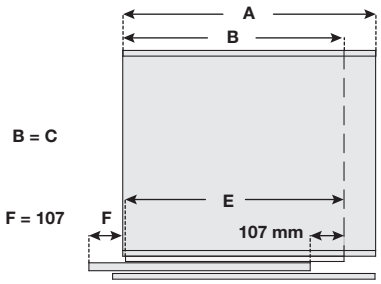

A	Cabinet depth
B	Installed depth
C	Door width
D	Door height
E	Horizontal profile length
F	External door protrusion

Dimensional data not binding. Dimensions in mm, inches are approximate. We reserve the right to alter specifications without notice.

HAWA Concepta 25/30/40/50

- > Door width: 300–900 mm (11 13/16"–2' 11 7/16")
- > Door thickness: Wood: 19–30 mm (3/4"–1 3/16");
  Rabbeted: >30–50 mm (>1 3/16"–1 15/16")
- > The door is pulled into the pocket automatically
- > Suitable for room partitioning as there is no need for a base or top panel in wall recesses
- > For right or left hand use
- > Unique scissor technology accommodates large and heavy doors
- > All adjustments are made from the front of the cabinet

Application

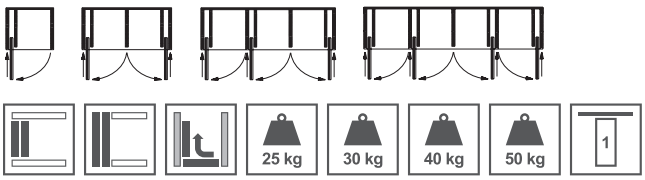

→ Installation

Dimensions

A	B	C	D	E
19–30 (3/4"–1 3/16")	55 (2 3/16")	0	0	0
33 (1 5/16")	58 (2 5/16")	0	3 (1/8")	3 (1/8")
36 (1 7/16")	63 (2 1/2")	2 (1/16")	6 (1/4")	5 (3/16")
39 (1 9/16")	67 (2 5/8")	3 (1/8")	9 (3/8")	8 (5/16")
42 (1 5/8")	70 (2 3/4")	3 (1/8")	12 (1/2")	11 (7/16")
45 (1 3/4")	75 (2 15/16")	5 (3/16")	15 (9/16")	14 (9/16")
48 (1 7/8")	79 (3 1/8")	6 (1/4")	18 (11/16")	17 (11/16")
50 (1 15/16")	83 (3 1/4")	7 (9/32")	21 (13/16")	19 (3/4")

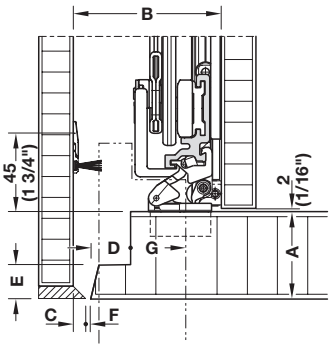

Gap width dimensions

F	G
2 (3/32")	29.5 (1 3/16")
3 (1/8")	28.5 (1 1/8")
4 (5/32")	27.5 (1 1/16")
5 (3/16")	26.5 (1 1/16")

Rabbet dimension
The rabbet allows the use of wood doors with thickness of >30–50 mm (>1 3/16"–1 15/16").

→ Installation dimensions

Calculation for wood doors

For door weight	TH	T	E
25 kg (55 lbs.)	1250–1850 (4' 1 3/16"–6' 3/16")	<650 (2' 1 9/16")	<577 (1' 10 11/16")
30 kg (66 lbs.)	1851–2300 (6' 7/8"–7' 6 9/16")	<900 (2' 11 7/16")	<827 (2' 8 9/16")
40 kg (88 lbs.)	1851–2500 (6' 7/8"–8' 2 7/16")	<900 (2' 11 7/16")	<827 (2' 8 9/16")
50 kg (110 lbs.)	2301–2850 (7' 6 9/16"–9' 4 3/16")	<900 (2' 11 7/16")	<827 (2' 8 9/16")

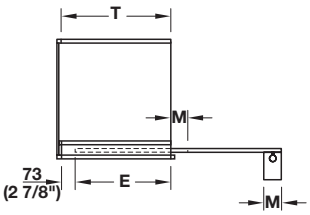

T = TB – M + 73 mm (2 7/8")
E = T – 73 mm (2 7/8")
TH = door height
M = door handle width
E = max. push-in depth measured from the inner side of closed door
T = max. distance for mounting the fitting measured from the inner side of closed door to rear edge of fitting.
For deeper furniture cabinets: Install fitting at dim. T measured from the inner side of closed door.

Dimensional data not binding. Dimensions in mm, inches are approximate. We reserve the right to alter specifications without notice.

HAWA Concepta 25/30/40/50

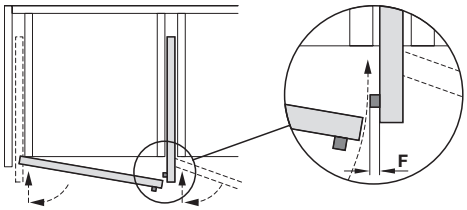

> Max. door handle height with adjoining cabinets

Door thickness	Door handle height F
<19 (3/4")	13.5 (9/16")
<22 (7/8")	10 (3/8")
<25 (1")	5 (3/16")
<50 (1 15/16")	2 (1/16")

Note
The door handle height must be taken into consideration if the doors of adjoining cabinets coincide when one door is opened. We recommend mounting flush pull handles.

Kitchen cabinet constructions with and without fixed continuous base
The same connecting profile is used at top and bottom for constructions with base cabinet feet.
A 26 mm (1") connecting profile is used for cabinets that are mounted on a fixed continuous base.

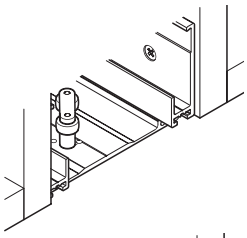

Construction with base cabinet feet
Profile at top and bottom;
Connector width 110 mm
(4 5/16"); length 650 (2' 1 9/16")
or 900 mm (2' 11 7/16")

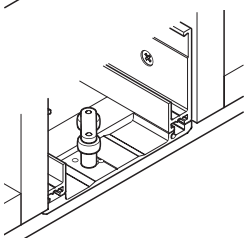

Construction with a continuous fixed base
Profile at top;
Connector width 110 mm (4 5/16");
length 650 (2' 1 9/16")
or 900 mm (2' 11 7/16")
Profile at bottom; Connector width 110 mm
(4 5/16"); length 26 mm (1")

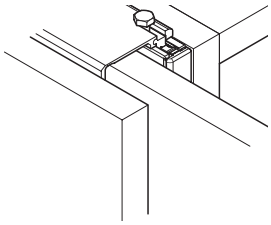

Connector width 55 mm (2 3/16");
Recess for 1 pivot sliding door,
door thickness 19–30 mm
(3/4"–1 3/6")

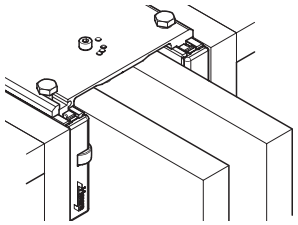

Connector width 110 mm (4 5/16");
Recess for 2 pivot sliding doors,
door thickness 19–28 mm
(3/4"–1 1/8")

Connector connecting profile
Connecting profile for quick and easy installation of pivot sliding doors that overlay the base panel and cabinet top panel (Vorfront):
> Join cabinet side panels/cabinets laterally
> Slide connecting profile into the running and guide tracks from the front and secure with screws from above
> Height variations of the external side or cabinets are compensated by the connector by up to ±1.5 mm (1/16")

Dimensional data not binding. Dimensions in mm, inches are approximate. We reserve the right to alter specifications without notice.

HAWA Concepta 25/30/40/50

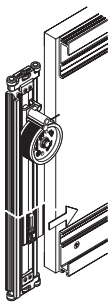

HAWA Concepta 25/30
TB - Door width; **TH** - Door height

→ Concepta 25

TB	300 (11 13/16")	350 (1' 1 3/4")	400 (1' 3 3/4")	450 (1' 5 11/16")	500 (1' 7 11/16")	550 (1' 9 5/8")	600 (1' 11 5/8")	650 (2' 1 9/16")	700 (2' 3 9/16")	750 (2' 5 1/2")
TH										
1850 (6' 13/16")	25 (55.1 lbs.)	25 (55.1 lbs.)	25 (55.1 lbs.)	25 (55.1 lbs.)	25 (55.1 lbs.)	25 (55.1 lbs.)	25 (55.1 lbs.)	24 (52.9 lbs.)	23 (50.7 lbs.)	22 (48.5 lbs.)
1800 (5' 10 7/8")	25 (55.1 lbs.)	25 (55.1 lbs.)	25 (55.1 lbs.)	25 (55.1 lbs.)	25 (55.1 lbs.)	25 (55.1 lbs.)	25 (55.1 lbs.)	23 (50.7 lbs.)	22 (48.5 lbs.)	21 (46.3 lbs.)
1750 (5' 8 7/8")	25 (55.1 lbs.)	25 (55.1 lbs.)	25 (55.1 lbs.)	25 (55.1 lbs.)	25 (55.1 lbs.)	25 (55.1 lbs.)	24 (52.9 lbs.)	22 (48.5 lbs.)	21 (46.3 lbs.)	21 (46.3 lbs.)
1700 (5' 6 15/16")	25 (55.1 lbs.)	25 (55.1 lbs.)	25 (55.1 lbs.)	25 (55.1 lbs.)	25 (55.1 lbs.)	25 (55.1 lbs.)	24 (52.9 lbs.)	21 (46.3 lbs.)	21 (46.3 lbs.)	20 (44.1 lbs.)
1650 (5' 4 15/16")	25 (55.1 lbs.)	25 (55.1 lbs.)	25 (55.1 lbs.)	25 (55.1 lbs.)	25 (55.1 lbs.)	25 (55.1 lbs.)	24 (52.9 lbs.)	21 (46.3 lbs.)	21 (46.3 lbs.)	20 (44.1 lbs.)
1600 (5' 3")	25 (55.1 lbs.)	25 (55.1 lbs.)	25 (55.1 lbs.)	25 (55.1 lbs.)	25 (55.1 lbs.)	24 (52.9 lbs.)	23 (50.7 lbs.)	21 (46.3 lbs.)	20 (44.1 lbs.)	19 (41.9 lbs.)
1550 (5' 1")	25 (55.1 lbs.)	25 (55.1 lbs.)	25 (55.1 lbs.)	25 (55.1 lbs.)	25 (55.1 lbs.)	24 (52.9 lbs.)	22 (48.5 lbs.)	20 (44.1 lbs.)	19 (41.9 lbs.)	18 (40 lbs.)
1500 (4' 11 1/16")	25 (55.1 lbs.)	25 (55.1 lbs.)	25 (55.1 lbs.)	25 (55.1 lbs.)	25 (55.1 lbs.)	24 (52.9 lbs.)	21 (46.3 lbs.)	19 (41.9 lbs.)	18 (40 lbs.)	18 (40 lbs.)
1450 (4' 9 1/16")	25 (55.1 lbs.)	25 (55.1 lbs.)	25 (55.1 lbs.)	25 (55.1 lbs.)	24 (52.9 lbs.)	23 (50.7 lbs.)	21 (46.3 lbs.)	18 (40 lbs.)	18 (40 lbs.)	17 (37.5 lbs.)
1400 (4' 7 1/8")	25 (55.1 lbs.)	25 (55.1 lbs.)	25 (55.1 lbs.)	25 (55.1 lbs.)	24 (52.9 lbs.)	21 (46.3 lbs.)	19 (41.9 lbs.)	17 (37.5 lbs.)	16 (35.3 lbs.)	15 (33.1 lbs.)
1350 (4' 5 1/8")	25 (55.1 lbs.)	25 (55.1 lbs.)	25 (55.1 lbs.)	24 (52.9 lbs.)	23 (50.7 lbs.)	21 (46.3 lbs.)	18 (40 lbs.)	16 (35.3 lbs.)	16 (35.3 lbs.)	15 (33.1 lbs.)
1300 (4' 3 3/16")	25 (55.1 lbs.)	25 (55.1 lbs.)	25 (55.1 lbs.)	24 (52.9 lbs.)	22 (48.5 lbs.)	20 (44.1 lbs.)	18 (40 lbs.)	15 (33.1 lbs.)	15 (33.1 lbs.)	14 (30.9 lbs.)
1250 (4' 1 3/16")	25 (55.1 lbs.)	25 (55.1 lbs.)	24 (52.9 lbs.)	23 (50.7 lbs.)	21 (46.3 lbs.)	19 (41.9 lbs.)	17 (37.5 lbs.)	15 (33.1 lbs.)	14 (30.9 lbs.)	13 (28.7 lbs.)

→ Concepta 30

TB	300 (11 13/16")	350 (1' 1 3/4")	400 (1' 3 3/4")	450 (1' 5 11/16")	500 (1' 7 11/16")	550 (1' 9 5/8")	600 (1' 11 5/8")	650 (2' 1 9/16")	700 (2' 3 9/16")	750 (2' 5 1/2")	800 (2' 7 1/2")	850 (2' 9 7/16")	900 (2' 11 7/16")
TH													
2300 (7' 6 9/16")	30 (66.1 lbs.)	30 (66.1 lbs.)	30 (66.1 lbs.)	30 (66.1 lbs.)	30 (66.1 lbs.)	30 (66.1 lbs.)	30 (66.1 lbs.)	30 (66.1 lbs.)	30 (66.1 lbs.)	30 (66.1 lbs.)	29 (63.9 lbs.)	27 (59.5 lbs.)	26 (57.3 lbs.)
2250 (7' 4 9/16")	30 (66.1 lbs.)	30 (66.1 lbs.)	30 (66.1 lbs.)	30 (66.1 lbs.)	30 (66.1 lbs.)	30 (66.1 lbs.)	30 (66.1 lbs.)	30 (66.1 lbs.)	30 (66.1 lbs.)	30 (66.1 lbs.)	28 (61.7 lbs.)	27 (59.5 lbs.)	25 (55.1 lbs.)
2200 (7' 2 5/8")	30 (66.1 lbs.)	30 (66.1 lbs.)	30 (66.1 lbs.)	30 (66.1 lbs.)	30 (66.1 lbs.)	30 (66.1 lbs.)	30 (66.1 lbs.)	30 (66.1 lbs.)	30 (66.1 lbs.)	29 (63.9 lbs.)	27 (59.5 lbs.)	26 (57.3 lbs.)	24 (52.9 lbs.)
2150 (7' 5/8")	30 (66.1 lbs.)	30 (66.1 lbs.)	30 (66.1 lbs.)	30 (66.1 lbs.)	30 (66.1 lbs.)	30 (66.1 lbs.)	30 (66.1 lbs.)	30 (66.1 lbs.)	30 (66.1 lbs.)	29 (63.9 lbs.)	27 (59.5 lbs.)	25 (55.1 lbs.)	24 (52.9 lbs.)
2100 (6' 10 11/16")	30 (66.1 lbs.)	30 (66.1 lbs.)	30 (66.1 lbs.)	30 (66.1 lbs.)	30 (66.1 lbs.)	30 (66.1 lbs.)	30 (66.1 lbs.)	30 (66.1 lbs.)	30 (66.1 lbs.)	28 (61.7 lbs.)	26 (57.3 lbs.)	25 (55.1 lbs.)	23 (50.7 lbs.)
2050 (6' 8 11/16")	30 (66.1 lbs.)	30 (66.1 lbs.)	30 (66.1 lbs.)	30 (66.1 lbs.)	30 (66.1 lbs.)	30 (66.1 lbs.)	30 (66.1 lbs.)	30 (66.1 lbs.)	29 (63.9 lbs.)	27 (59.5 lbs.)	25 (55.1 lbs.)	24 (52.9 lbs.)	23 (50.7 lbs.)
2000 (6' 6 3/4")	30 (66.1 lbs.)	30 (66.1 lbs.)	30 (66.1 lbs.)	30 (66.1 lbs.)	30 (66.1 lbs.)	30 (66.1 lbs.)	30 (66.1 lbs.)	30 (66.1 lbs.)	29 (63.9 lbs.)	26 (57.3 lbs.)	25 (55.1 lbs.)	23 (50.7 lbs.)	22 (48.5 lbs.)
1950 (6' 4 3/4")	30 (66.1 lbs.)	30 (66.1 lbs.)	30 (66.1 lbs.)	30 (66.1 lbs.)	30 (66.1 lbs.)	30 (66.1 lbs.)	30 (66.1 lbs.)	29 (63.9 lbs.)	27 (59.5 lbs.)	26 (57.3 lbs.)	24 (52.9 lbs.)	23 (50.7 lbs.)	21 (46.3 lbs.)
1900 (6' 2 13/16")	30 (66.1 lbs.)	30 (66.1 lbs.)	30 (66.1 lbs.)	30 (66.1 lbs.)	30 (66.1 lbs.)	30 (66.1 lbs.)	30 (66.1 lbs.)	29 (63.9 lbs.)	27 (59.5 lbs.)	25 (55.1 lbs.)	23 (50.7 lbs.)	22 (48.5 lbs.)	21 (46.3 lbs.)
1850 (6' 13/16")	30 (66.1 lbs.)	30 (66.1 lbs.)	30 (66.1 lbs.)	30 (66.1 lbs.)	30 (66.1 lbs.)	30 (66.1 lbs.)	30 (66.1 lbs.)	28 (61.7 lbs.)	26 (57.3 lbs.)	24 (52.9 lbs.)	23 (50.7 lbs.)	21 (46.3 lbs.)	20 (44.1 lbs.)

Dimensional data not binding. Dimensions in mm, inches are approximate. We reserve the right to alter specifications without notice.

HAWA Concepta 25/30/40/50

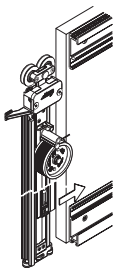

HAWA Concepta 40/50
TB - Door width; **TH** - Door height

→ Concepta 40

> Red ratio line represents standard set
> Adding an additional hinge (408.31.405) moves the red ratio line to the black line

TB	300 (11 13/16")	350 (1' 1 3/4")	400 (1' 3 3/4")	450 (1' 5 11/16")	500 (1' 7 11/16")	550 (1' 9 5/8")	600 (1' 11 5/8")	650 (2' 1 9/16")	700 (2' 3 9/16")	750 (2' 5 1/2")	800 (2' 7 1/2")	850 (2' 9 7/16")	900 (2' 11 7/16")
TH													
2500 (8' 2 7/16")	40 (88.2 lbs.)	40 (88.2 lbs.)	40 (88.2 lbs.)	40 (88.2 lbs.)	40 (88.2 lbs.)	40 (88.2 lbs.)	40 (88.2 lbs.)	40 (88.2 lbs.)	40 (88.2 lbs.)	40 (88.2 lbs.)	40 (88.2 lbs.)	40 (88.2 lbs.)	40 (88.2 lbs.)
2450 (8' 7/16")	40 (88.2 lbs.)	40 (88.2 lbs.)	40 (88.2 lbs.)	40 (88.2 lbs.)	40 (88.2 lbs.)	40 (88.2 lbs.)	40 (88.2 lbs.)	40 (88.2 lbs.)	40 (88.2 lbs.)	40 (88.2 lbs.)	40 (88.2 lbs.)	40 (88.2 lbs.)	39 (86 lbs.)
2400 (7' 10 1/2")	40 (88.2 lbs.)	40 (88.2 lbs.)	40 (88.2 lbs.)	40 (88.2 lbs.)	40 (88.2 lbs.)	40 (88.2 lbs.)	40 (88.2 lbs.)	40 (88.2 lbs.)	40 (88.2 lbs.)	40 (88.2 lbs.)	40 (88.2 lbs.)	40 (88.2 lbs.)	38 (83.8 lbs.)
2350 (7' 8 1/2")	40 (88.2 lbs.)	40 (88.2 lbs.)	40 (88.2 lbs.)	40 (88.2 lbs.)	40 (88.2 lbs.)	40 (88.2 lbs.)	40 (88.2 lbs.)	40 (88.2 lbs.)	40 (88.2 lbs.)	40 (88.2 lbs.)	40 (88.2 lbs.)	39 (86 lbs.)	37 (81.6 lbs.)
2300 (7' 6 9/16")	40 (88.2 lbs.)	40 (88.2 lbs.)	40 (88.2 lbs.)	40 (88.2 lbs.)	40 (88.2 lbs.)	40 (88.2 lbs.)	40 (88.2 lbs.)	40 (88.2 lbs.)	40 (88.2 lbs.)	40 (88.2 lbs.)	40 (88.2 lbs.)	38 (83.8 lbs.)	36 (79.4 lbs.)
2250 (7' 4 9/16")	40 (88.2 lbs.)	40 (88.2 lbs.)	40 (88.2 lbs.)	40 (88.2 lbs.)	40 (88.2 lbs.)	40 (88.2 lbs.)	40 (88.2 lbs.)	40 (88.2 lbs.)	40 (88.2 lbs.)	40 (88.2 lbs.)	39 (86 lbs.)	37 (81.6 lbs.)	35 (77.2 lbs.)
2200 (7' 2 5/8")	40 (88.2 lbs.)	40 (88.2 lbs.)	40 (88.2 lbs.)	40 (88.2 lbs.)	40 (88.2 lbs.)	40 (88.2 lbs.)	40 (88.2 lbs.)	40 (88.2 lbs.)	40 (88.2 lbs.)	40 (88.2 lbs.)	38 (83.8 lbs.)	36 (79.4 lbs.)	34 (75 lbs.)
2150 (7' 5/8")	40 (88.2 lbs.)	40 (88.2 lbs.)	40 (88.2 lbs.)	40 (88.2 lbs.)	40 (88.2 lbs.)	40 (88.2 lbs.)	40 (88.2 lbs.)	40 (88.2 lbs.)	40 (88.2 lbs.)	39 (86 lbs.)	37 (81.6 lbs.)	35 (77.2 lbs.)	33 (72.8 lbs.)
2100 (6' 10 11/16")	40 (88.2 lbs.)	40 (88.2 lbs.)	40 (88.2 lbs.)	40 (88.2 lbs.)	40 (88.2 lbs.)	40 (88.2 lbs.)	40 (88.2 lbs.)	40 (88.2 lbs.)	40 (88.2 lbs.)	38 (83.8 lbs.)	36 (79.4 lbs.)	34 (75 lbs.)	32 (70.5 lbs.)
2050 (6' 8 11/16")	40 (88.2 lbs.)	40 (88.2 lbs.)	40 (88.2 lbs.)	40 (88.2 lbs.)	40 (88.2 lbs.)	40 (88.2 lbs.)	40 (88.2 lbs.)	40 (88.2 lbs.)	39 (86 lbs.)	37 (81.6 lbs.)	35 (77.2 lbs.)	33 (72.8 lbs.)	31 (68.3 lbs.)
2000 (6' 6 3/4")	40 (88.2 lbs.)	40 (88.2 lbs.)	40 (88.2 lbs.)	40 (88.2 lbs.)	40 (88.2 lbs.)	40 (88.2 lbs.)	40 (88.2 lbs.)	40 (88.2 lbs.)	38 (83.8 lbs.)	36 (79.4 lbs.)	34 (75 lbs.)	32 (70.5 lbs.)	30 (66.1 lbs.)
1950 (6' 4 3/4")	40 (88.2 lbs.)	40 (88.2 lbs.)	40 (88.2 lbs.)	40 (88.2 lbs.)	40 (88.2 lbs.)	40 (88.2 lbs.)	40 (88.2 lbs.)	39 (86 lbs.)	37 (81.6 lbs.)	35 (77.2 lbs.)	33 (72.8 lbs.)	31 (68.3 lbs.)	29 (63.9 lbs.)
1900 (6' 2 13/16)	40 (88.2 lbs.)	40 (88.2 lbs.)	40 (88.2 lbs.)	40 (88.2 lbs.)	40 (88.2 lbs.)	40 (88.2 lbs.)	40 (88.2 lbs.)	38 (83.8 lbs.)	36 (79.4 lbs.)	34 (75 lbs.)	32 (70.5 lbs.)	30 (66.1 lbs.)	28 (61.7 lbs.)
1850 (6' 13/16")	40 (88.2 lbs.)	40 (88.2 lbs.)	40 (88.2 lbs.)	40 (88.2 lbs.)	40 (88.2 lbs.)	40 (88.2 lbs.)	39 (86 lbs.)	37 (81.6 lbs.)	35 (77.2 lbs.)	33 (72.8 lbs.)	31 (68.3 lbs.)	29 (63.9 lbs.)	27 (59.5 lbs.)

→ Concepta 50

TB	300 (11 13/16")	350 (1' 1 3/4")	400 (1' 3 3/4")	450 (1' 5 11/16")	500 (1' 7 11/16")	550 (1' 9 5/8")	600 (1' 11 5/8")	650 (2' 1 9/16")	700 (2' 3 9/16")	750 (2' 5 1/2")	800 (2' 7 1/2")	850 (2' 9 7/16")	900 (2' 11 7/16")
TH													
2850 (9' 4 3/16")	50 (110.2 lbs.)	50 (110.2 lbs.)	50 (110.2 lbs.)	50 (110.2 lbs.)	50 (110.2 lbs.)	50 (110.2 lbs.)	50 (110.2 lbs.)	50 (110.2 lbs.)	50 (110.2 lbs.)	50 (110.2 lbs.)	50 (110.2 lbs.)	50 (110.2 lbs.)	50 (110.2 lbs.)
2800 (9' 2 1/4")	50 (110.2 lbs.)	50 (110.2 lbs.)	50 (110.2 lbs.)	50 (110.2 lbs.)	50 (110.2 lbs.)	50 (110.2 lbs.)	50 (110.2 lbs.)	50 (110.2 lbs.)	50 (110.2 lbs.)	50 (110.2 lbs.)	50 (110.2 lbs.)	50 (110.2 lbs.)	50 (110.2 lbs.)
2750 (9' 1/4")	50 (110.2 lbs.)	50 (110.2 lbs.)	50 (110.2 lbs.)	50 (110.2 lbs.)	50 (110.2 lbs.)	50 (110.2 lbs.)	50 (110.2 lbs.)	50 (110.2 lbs.)	50 (110.2 lbs.)	50 (110.2 lbs.)	50 (110.2 lbs.)	50 (110.2 lbs.)	50 (110.2 lbs.)
2700 (8" 10 5/16")	50 (110.2 lbs.)	50 (110.2 lbs.)	50 (110.2 lbs.)	50 (110.2 lbs.)	50 (110.2 lbs.)	50 (110.2 lbs.)	50 (110.2 lbs.)	50 (110.2 lbs.)	50 (110.2 lbs.)	50 (110.2 lbs.)	50 (110.2 lbs.)	50 (110.2 lbs.)	49 (107.8 lbs.)
2650 (8' 8 5/16")	50 (110.2 lbs.)	50 (110.2 lbs.)	50 (110.2 lbs.)	50 (110.2 lbs.)	50 (110.2 lbs.)	50 (110.2 lbs.)	50 (110.2 lbs.)	50 (110.2 lbs.)	50 (110.2 lbs.)	50 (110.2 lbs.)	50 (110.2 lbs.)	50 (110.2 lbs.)	48 (105.6 lbs.)
2600 (8' 6 3/8")	50 (110.2 lbs.)	50 (110.2 lbs.)	50 (110.2 lbs.)	50 (110.2 lbs.)	50 (110.2 lbs.)	50 (110.2 lbs.)	50 (110.2 lbs.)	50 (110.2 lbs.)	50 (110.2 lbs.)	50 (110.2 lbs.)	50 (110.2 lbs.)	49 (107.8 lbs.)	48 (105.6 lbs.)
2550 (8' 4 3/8")	50 (110.2 lbs.)	50 (110.2 lbs.)	50 (110.2 lbs.)	50 (110.2 lbs.)	50 (110.2 lbs.)	50 (110.2 lbs.)	50 (110.2 lbs.)	50 (110.2 lbs.)	50 (110.2 lbs.)	50 (110.2 lbs.)	50 (110.2 lbs.)	48 (105.6 lbs.)	47 (103.6 lbs.)
2500 (8' 2 7/16")	50 (110.2 lbs.)	50 (110.2 lbs.)	50 (110.2 lbs.)	50 (110.2 lbs.)	50 (110.2 lbs.)	50 (110.2 lbs.)	50 (110.2 lbs.)	50 (110.2 lbs.)	50 (110.2 lbs.)	50 (110.2 lbs.)	49 (107.8 lbs.)	48 (105.6 lbs.)	46 (101.4 lbs.)
2450 (8' 7/16")	50 (110.2 lbs.)	50 (110.2 lbs.)	50 (110.2 lbs.)	50 (110.2 lbs.)	50 (110.2 lbs.)	50 (110.2 lbs.)	50 (110.2 lbs.)	50 (110.2 lbs.)	50 (110.2 lbs.)	49 (107.8 lbs.)	48 (105.6 lbs.)	46 (101.4 lbs.)	45 (99.2 lbs.)
2400 (7' 10 1/2")	50 (110.2 lbs.)	50 (110.2 lbs.)	50 (110.2 lbs.)	50 (110.2 lbs.)	50 (110.2 lbs.)	50 (110.2 lbs.)	50 (110.2 lbs.)	50 (110.2 lbs.)	50 (110.2 lbs.)	48 (105.6 lbs.)	48 (105.6 lbs.)	46 (101.4 lbs.)	45 (99.2 lbs.)
2350 (7' 8 1/2")	50 (110.2 lbs.)	50 (110.2 lbs.)	50 (110.2 lbs.)	50 (110.2 lbs.)	50 (110.2 lbs.)	50 (110.2 lbs.)	50 (110.2 lbs.)	50 (110.2 lbs.)	49 (107.8 lbs.)	48 (105.6 lbs.)	47 (103.6 lbs.)	45 (99.2 lbs.)	44 (97 lbs.)
2301 (7' 6 9/16")	50 (110.2 lbs.)	50 (110.2 lbs.)	50 (110.2 lbs.)	50 (110.2 lbs.)	50 (110.2 lbs.)	50 (110.2 lbs.)	50 (110.2 lbs.)	49 (107.8 lbs.)	48 (105.6 lbs.)	47 (103.6 lbs.)	46 (101.4 lbs.)	45 (99.2 lbs.)	43 (94.8 lbs.)

Dimensional data not binding. Dimensions in mm, inches are approximate. We reserve the right to alter specifications without notice.

HAWA Concepta 25/30/40/50

→ Door overlay on base panel and cabinet top panel (Vorfront)

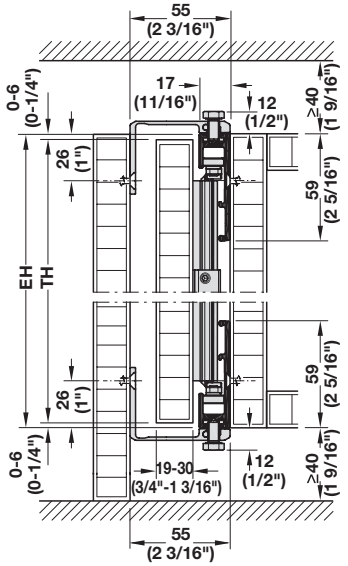

EH = installation height Concepta 25/30 with connector width 55 mm (2 3/16")

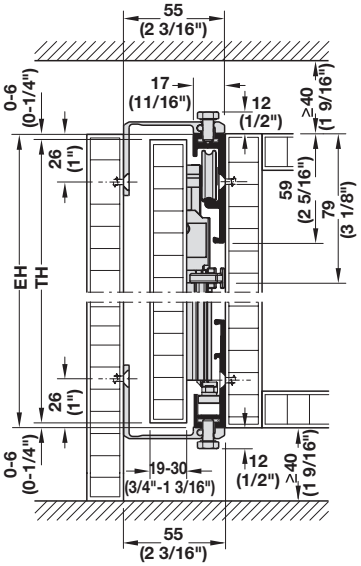

TH = door height Concepta 40/50 with connector width 55 mm (2 3/16")

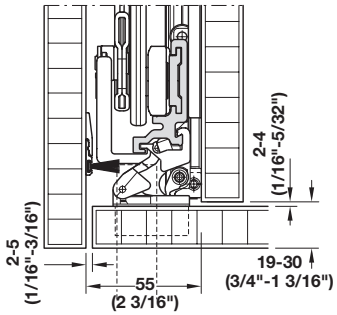

Door closed (Infront and Vorfront)

→ Inset door (Infront)

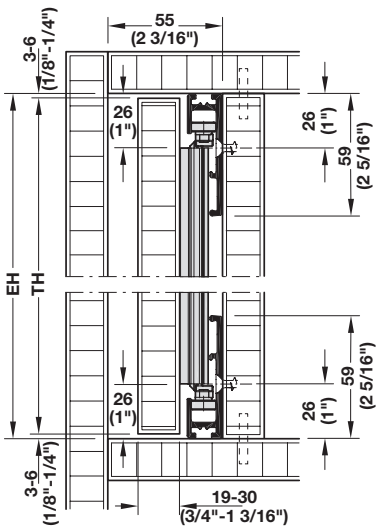

EH = installation height Concepta 25/30

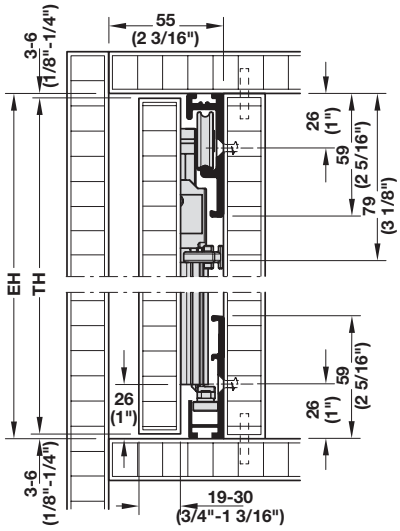

TH = door height Concepta 40/50

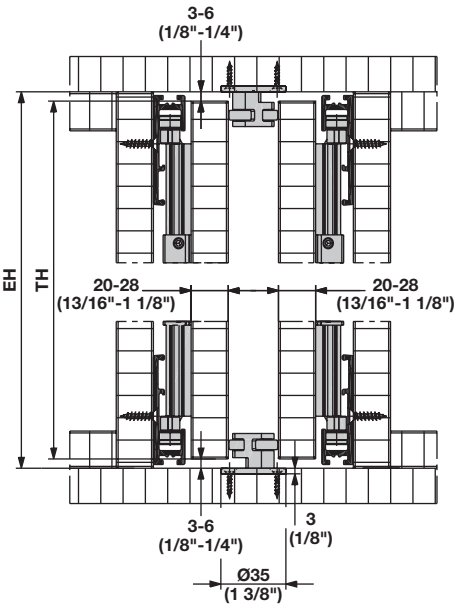

Dimensional data not binding. Dimensions in mm, inches are approximate. We reserve the right to alter specifications without notice.

HAWA Concepta 25/30/40/50

→ Door in wall recess

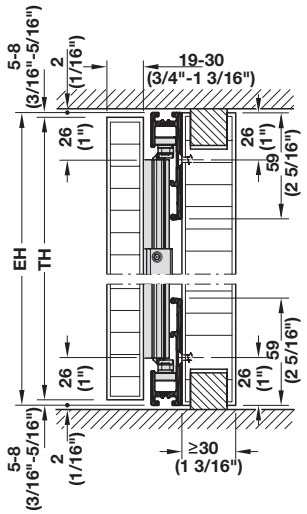

EH = installation height Concepta 25/30

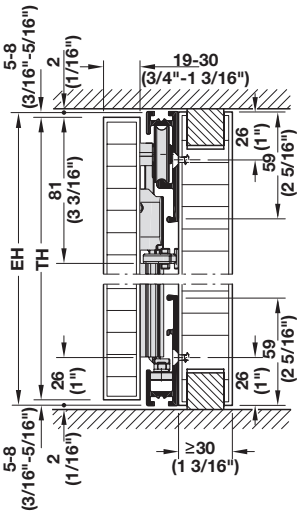

TH = door height Concepta 40/50

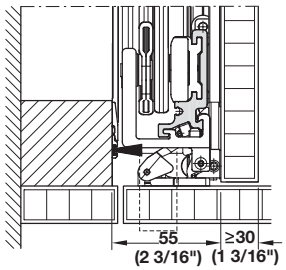

Door closed

→ Sets, for one door

Door height	Door width	Door weight	Item No.
1250–1850 (4' 1 3/16"–6' 13/16")	300–750 (11 13/16"–29 1/2")	25 kg (55 lbs.)	408.30.590
1851–2300 (6' 7/8"–7' 6 3/16")	300–900 (11 13/16"–35 7/16")	30 kg (66 lbs.)	408.30.591
1851–2500 (6' 7/8"–8' 2 7/16")	300–900 (11 13/16"–35 7/16")	40 kg (88 lbs.)	408.30.592
2301–2850 (7' 6 9/16"–9' 4 3/16")	300–900 (11 13/16"–35 7/16")	50 kg (110 lbs.)	408.30.593

→ Accessories

	Description	Width	Material	Finish	Length	Item No.
	Concepta hinge with soft close	–	Zinc die cast	nickel	–	408.31.405
	Guide for two pivot/slide-in doors, for inset application	–	Aluminum	silver colored anodized	–	408.30.295
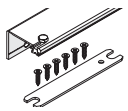	Connector connecting profile for one pivot/slide-in door. Required at top and bottom of cabinet.	44 (2 3/16")	Aluminum	silver colored anodized	650 (25 9/16")	408.30.243
					900 (35 7/16")	408.30.092
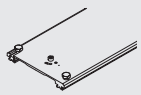	Connector connecting profile with guide for two pivot/slide-in doors.	110 (4 5/16")	Aluminum	silver colored anodized	650 (25 9/16")	408.30.093
					900 (35 7/16")	408.30.094
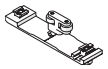	Connector connecting profile with guide for two pivot/slide-in doors.	110 (4 5/16")	Aluminum	silver colored anodized	26 (1 1/32")	408.30.095

Note

Pocket for 1 pivot sliding door: To connect the outer panel to the cabinet with a cabinet depth of 650 mm (25 9/16") order 1 set of 408.30.243. For a cabinet depth between 651–900 mm (25 5/8"–35 7/16") order 2 pieces of 408.30.092.

Pocket for 2 pivot sliding doors: To connect 2 cabinets at the top and bottom and that are mounted on base cabinet feet order 2 pieces of either 408.30.093 or 408.30.094 depending on depth of cabinets.
To connect 2 cabinets at the top and bottom and that are mounted on a fixed continuous base order 1 piece of 408.30.093 or 408.30.094 at the top depending on depth of cabinets and 1 piece of 408.30.095 at the bottom.

Dimensional data not binding. Dimensions in mm, inches are approximate. We reserve the right to alter specifications without notice.

HAWA Folding Concepta 25

> Door weight: max. 25 kg (55 lbs.), per pair 50 kg (110 lbs.)
> Door height: 1250–1850 mm (49 3/16"–72 13/16") or
1851–2600 mm (72 7/8"–102 3/8")
> Door width: 300–700 mm (11 13/16"–27 9/16")
> Door thickness: 19–26 mm (3/4"–1")

→ Fitting Sets for 2-Door or 4-Door Applications

Door height	Handing	clear anodized	black anodized
1250–1850 (49 3/16"–72 13/16")	left	408.31.008	408.31.012
	right	408.31.009	408.31.013
1851–2600 (72 7/8"–102 3/8")	left	408.31.010	408.31.014
	right	408.31.011	408.31.015

Supplied With
1 set

Note
For a 4-door application order 1 left and right set.

→ Fitting Sets for 3-Door Applications

Door height	Handing	clear anodized	black anodized
1851–2600 (72 7/8"–102 3/8")	left	408.31.016	408.31.018
	right	408.31.017	408.31.019

Supplied With
1 set

Note
For a 3-door system order 1 set of the above listed sets and 1 set of the Hawa Concepta 30/40 or 50 fitting set. See page **7.126**

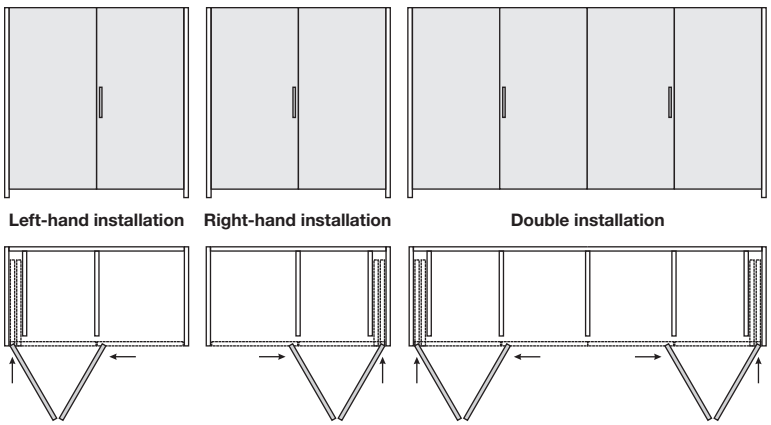

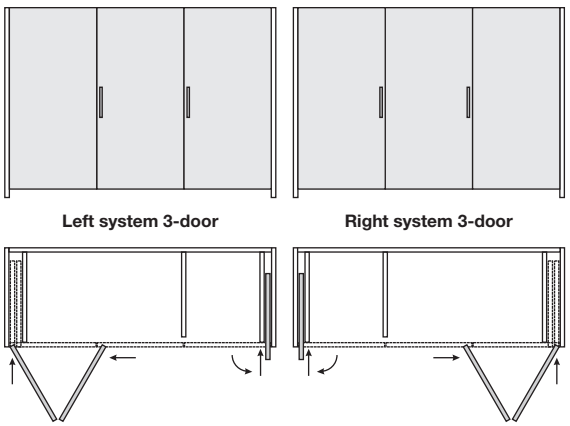

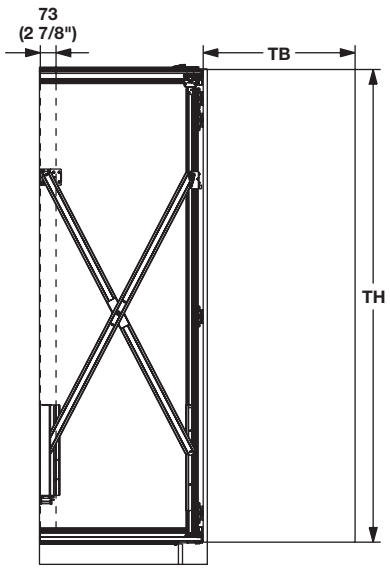

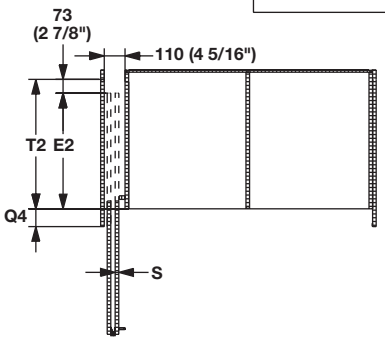

T2 = TB + 73 mm (2 7/8") - Q4
E2 = T2 - 73 mm (2 7/8")
Q4 = 75 mm (2 15/16" + S)

T2 ≤ 680 mm (26 3/4")
TH = Door height
TB = Door width
S = Door thickness

Dimensional data not binding. Dimensions in mm, inches are approximate. We reserve the right to alter specifications without notice.

HAWA Folding Concepta 25

→ Doors overlay cabinet top and bottom panels

> With bottom profile

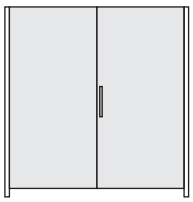

Left hand installation

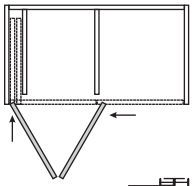

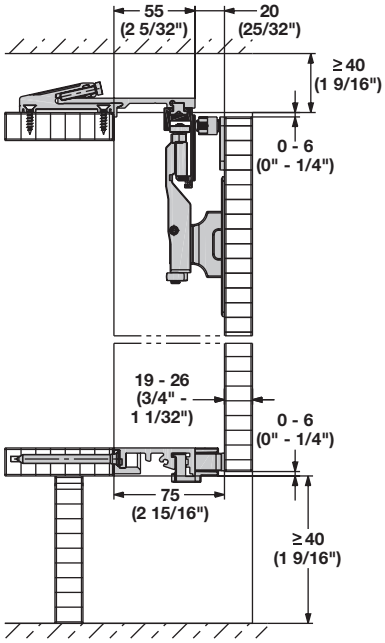

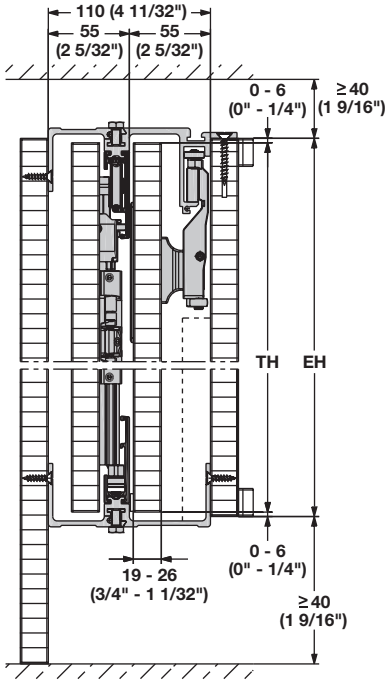

→ Doors in wall recess

> Without a cabinet bottom panel

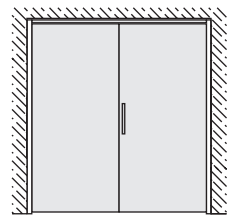

Left hand installation

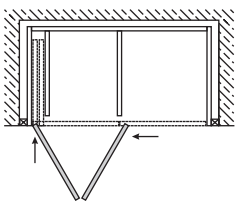

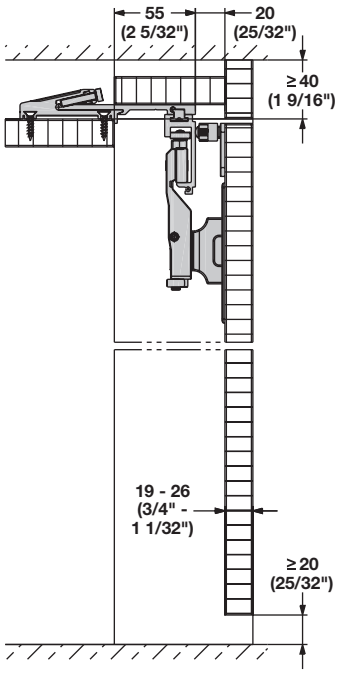

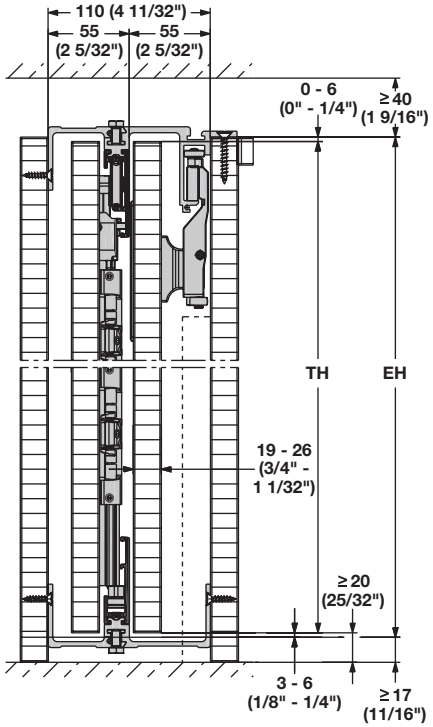

Dimensional data not binding. Dimensions in mm, inches are approximate. We reserve the right to alter specifications without notice.

HAWA Folding Concepta 25

→ Doors from worktop to cabinet top panel

Left-hand installation

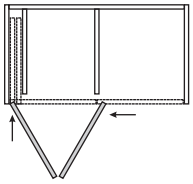

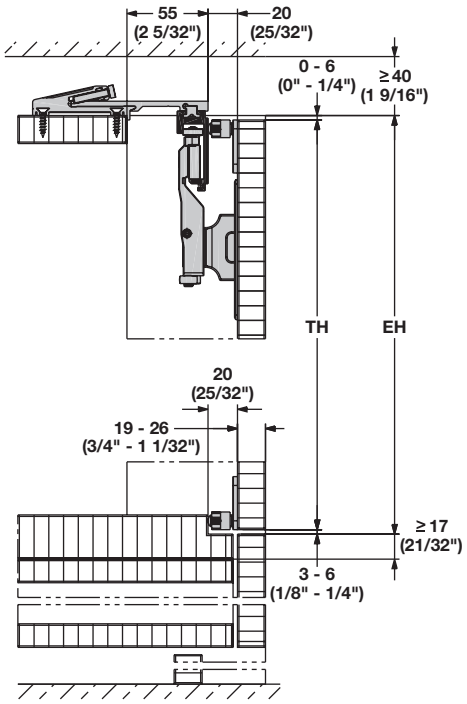

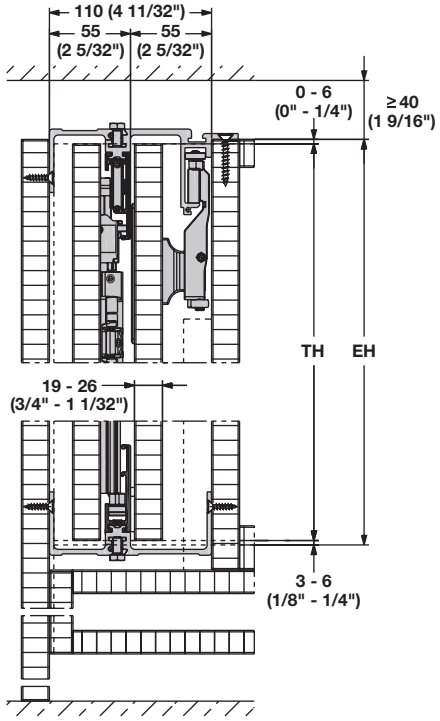

→ Accessories - Cabinet Bottom Profile

> The cabinet bottom profile is the ideal complement to the Folding Concepta 25 for folding doors that overlay the top and bottom cabinet panel
> The leading ramp makes sure that the folding doors are flush when closed
> With leading ramp and drilling jig
> Material: Aluminum

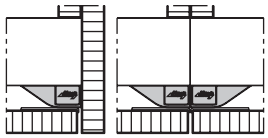

Position of cabinet bottom profile and leading ramp for a 2-door and 4 door application

	Finish	Length	Item No.
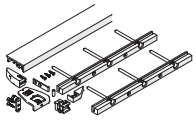	clear anodized	1.3 m (51 3/16")	408.30.961
		2.0 m (78 3/4")	408.30.432
	black anodized	1.3 m (51 3/16")	408.30.430
		2.0 m (78 3/4")	408.30.431

Supplied With
Leading ramp
Drilling jig

Dimensional data not binding. Dimensions in mm, inches are approximate. We reserve the right to alter specifications without notice.

HAWA Folding Concepta 25

→ Accessories - Door Centering Components

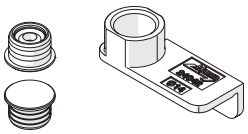

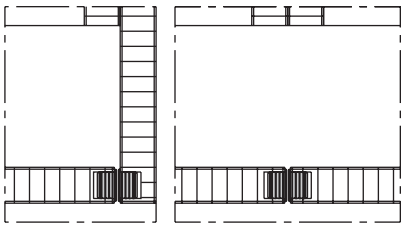

Door centering position: 2-door and 4-door

> The door centering components are utilized to magnetically center folding doors that are installed into cabinets mounted into a wall recess or into a cabinet designed without a bottom panel
> Magnetic
> Material: Aluminum, clear anodized

	Item No.
	408.30.229

Supplied With
Drilling jig

→ Strengthening Profile

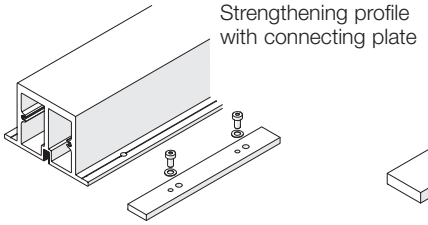

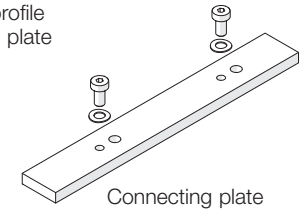

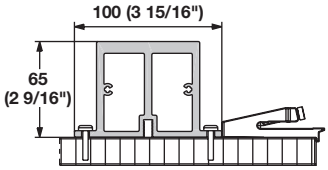

Profile, pre-assembled

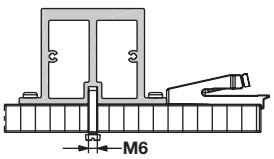

Profile, fitted from below

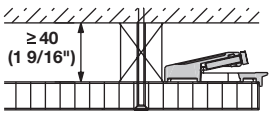

Jobsite solution

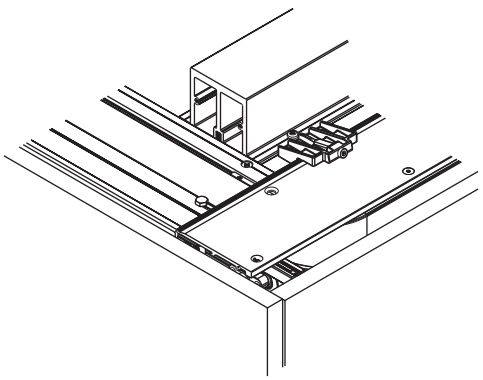

> The strengthening profile reinforces the cabinet top panel for a 3-door or 4-door folding application if supporting center panels are not desired
> Opening width: max. 2.8 m (110 1/4")
> Material: Aluminum, clear anodized

Description	Length	Item No.
Strengthening profile with connecting plate	2.6 m (102 3/8")	408.30.970
Connecting plate	–	408.30.400

Note
The strengthening profile is available cut-to-size upon request, if this option is chosen the connecting plate has to be ordered separately.

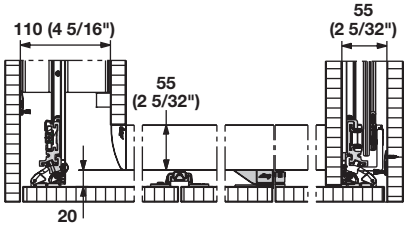

Plan view for a 3-door application

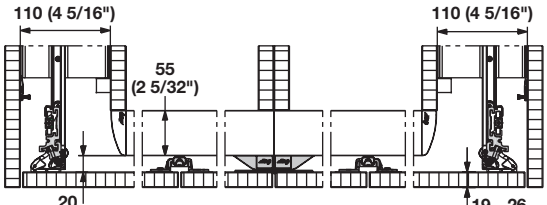

Plan view for a 4-door application

Dimensional data not binding. Dimensions in mm, inches are approximate. We reserve the right to alter specifications without notice.

Box Milano

> Unit height can be trimmed down by simply cutting the bottom of the front rails to the required height
> Dimensions listed are outside cabinet dimensions; unit is designed for 19 mm (3/4") panels
> Slats are made of solid, roll formed aluminum
> Guide track adds 19 mm (3/4") to cabinet depth
> Slat height: 25 mm (1")
> Material: Aluminum

Note
Special sizes of the Box Milano can be special ordered for a minimum of 5 kits (allow 4–6 weeks for production time)

→ Standard Slats

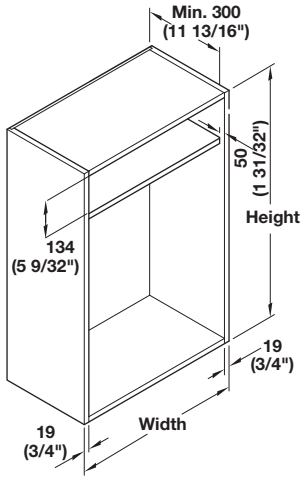

> Finish: brushed

Width	610 (24") Height	1524 (60") Height
457 (18")	443.17.290	443.17.295
533 (21")	443.17.314	443.17.319
610 (24")	443.17.296	443.17.301
762 (30")	443.17.302	443.17.307
914 (36")	443.17.308	443.17.313

> Finish: stainless steel finish

Width	610 (24") Height	1524 (60") Height
457 (18")	443.17.090	443.17.095
533 (21")	443.17.096	443.17.101
610 (24")	443.17.102	443.17.107
762 (30")	443.17.108	443.17.113
914 (36")	443.17.114	443.17.119

> Finish: matt aluminum

Width	610 (24") Height	1524 (60") Height
610 (24")	–	443.17.321
762 (30")	–	443.17.322
914 (36")	443.17.324	443.17.323

→ Finish Sample Chain

	Item No.
	732.06.392

Dimensional data not binding. Dimensions in mm, inches are approximate. We reserve the right to alter specifications without notice.

Milano Appliance Garage Kit

> Recommended shutter size:
> Height: 400–1500 mm (15 3/4"–59 1/16")
> Width: 400–1200 mm (15 3/4"–47 1/4")
> Material: Aluminum

Finish	Item No.
brushed aluminum	443.18.910
stainless steel	443.18.911
matt aluminum	443.18.912

Note
The below listed kit components will yield approximately 5 roller shutters W x H: 610 x 457 mm (24" x 18")

→ Kit Components

	Description	Finish	Length/Ø	Qty.
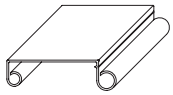	Tambour door slat	aluminum	3 m (118 1/8")	36 pcs. 108 m (354')
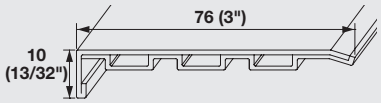	Top valance	–	3 m (118 1/8")	1 pc.
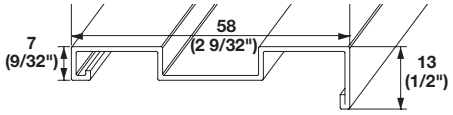	Handle slat	–	3 m (118 1/8")	1 pc.
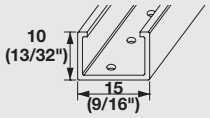	Surface mount track housing	aluminum	3 m (118 1/8")	5 pcs. 15 m (49')
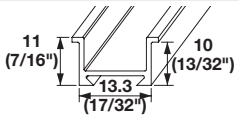	Internal guide track for mounting inside track	–	3 m (118 1/8")	5 pcs. 15 m (49')
	End cap for tambour slat	–	–	250 pcs.
	Handle cap with stop	–	–	10 pcs.
	Surface mount 90° corner track	–	Ø50 (2")	20 pcs.
	Guide wheels	–	Ø100 (4")	20 pcs.
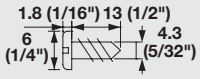	Flat screws for attaching wheels	–	–	20 pcs.
	Washer for attaching wheels	–	–	20 pcs.
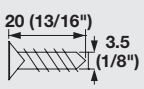	Countersunk screws for attaching corner track	–	–	40 pcs.
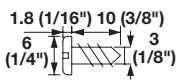	Flat screws for attaching guide track to cabinet	–	–	75 pcs.

Dimensional data not binding. Dimensions in mm, inches are approximate. We reserve the right to alter specifications without notice.

Custom Professional Grade Tambour Door Versions A1, A2, A3 Module

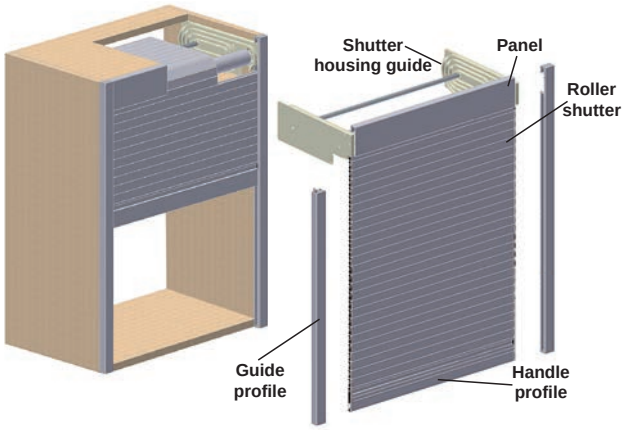

> For cabinet widths starting at: 600 mm (23 5/8")
> Weight capacity: profile height 18 mm (11/16"): 8.5 kg/m²
profile height 24 mm (15/16"): 6.0 kg/m²
> Thickness of profile: without glide end pieces: 8 mm (5/16")
with glide end pieces: 10 mm (3/8")
> Handle height: 66 mm (2 5/8"), same thickness as shutter profile
> Quick and easy to install
> Single walled, smooth profile
> With screw mounted guide profiles and shutter coil
> Vertical or horizontal sliding direction
> Slides into cabinet for overlay or inset installation and install guide profiles

→ Cabinet Size

Profile height	Inside cabinet width	Inside cabinet height
18 (23/32")	382–460 (15"–18")	300–800 (11 7/8"–31 1/2")
	461–1500 (18"–59")	300–1850 (11 7/8"–72 13/16")
24 (15/16")	382–460 (15"–18")	300–800 (11 7/8"–31 1/2")
	461–1500 (18"–59")	300–1850 (11 7/8"–72 13/16")

→ Installation

Inside cabinet height	Min. installation depth
Up to 1150 (45 1/4")	300 (11 7/8")
Up to 1550 (61")	380 (15")
Up to 1850 (72 13/16")	440 (17 3/8")

→ Order reference

Vertical
Downwards closing

Horizontal

Closure direction **left**

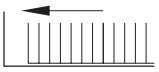

Closure direction **right**

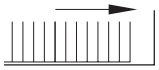

Closure direction **left and right**

S66 Handle Profile

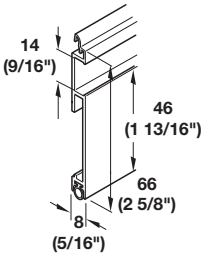

Dimensional data not binding. Dimensions in mm, inches are approximate. We reserve the right to alter specifications without notice.

Custom Professional Grade Tambour Door Versions A1, A2, A3 Module

> Material: Extruded Aluminum; Glide Plate: Plastic
> Shaft: Steel and Aluminum

Finish	Profile height	A1 module	A2 module	A3 module
silver colored anodized	18 (23/32")	443.05.900	443.06.900	443.07.900
	24 (15/16")	443.05.910	443.06.910	443.07.910
brushed stainless steel	18 (23/32")	443.05.000	443.06.000	443.07.000
	24 (15/16")	443.05.010	443.06.010	443.07.010
powder-coated in RAL colors	18 (23/32")	443.05.600	443.06.600	443.07.600
	24 (15/16")	443.05.610	443.06.610	443.07.610

Supplied With
Shutter mat
Lock panel with glide end pieces
2 Guide profiles
Front cover panel
Counterbalancing device with a spring shaft with side pinion gears
Pair of shutter coils

→ A1 Overlay shutter guide installation

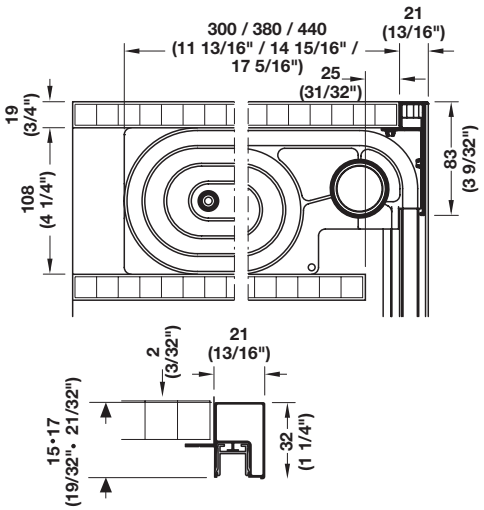

→ A2 Inset installation

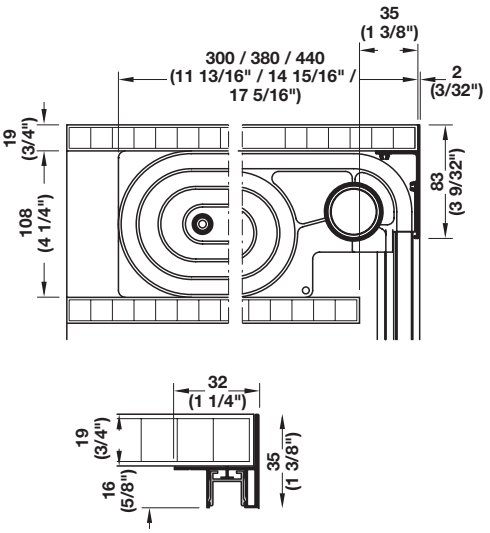

→ A3 Inset installation cabinet edge visible

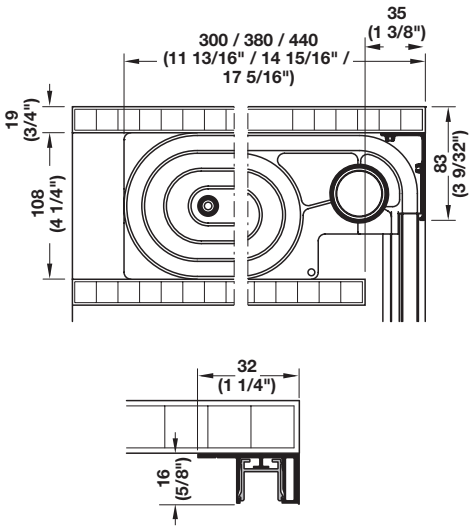

Dimensional data not binding. Dimensions in mm, inches are approximate. We reserve the right to alter specifications without notice.

Custom Professional Grade Tambour Door Version B

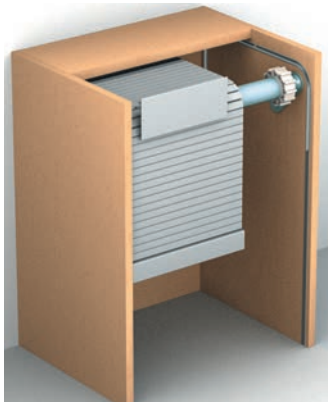

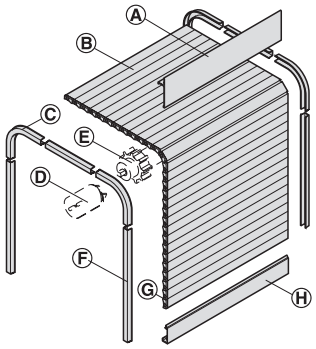

> Thickness of profile with glide end pieces: 10 mm (3/8")
> Profile height: 18, 24 and 34 mm (23/32", 15/16" and 1 11/32")
> Lock panel height: 40 mm (1 9/16"); thickness: 18 mm (23/32")
> With recessed guide profiles
> Vertical or horizontal sliding direction
> With balance shaft for screw mounting
> Internal cabinet height: max. 2000 mm (78 3/4")

→ Balance Shaft

> For synchronized operation of the tambour door; the shaft doesn't function as a counterbalancing mechanism
> From internal cabinet width: 1200 mm (47 1/4") and above (also for smaller versions on request)
> Can only be used for single-walled door profiles and up to a profile height of 24 mm (15/16")
> Can be mounted to front or back, standard is front, in case of an installation to the back the tambour door has be extended by the internal depth; provide internal cabinet depth dimension when ordering

→ Counterbalancing Mechanism

> The tambour door operates easily up to a door weight of 5 kg (11 lbs.) For a tambour door heavier than 5 kg (11 lbs.) but less than 10 kg (22 lbs.) we recommend using a counterbalancing mechanism for safety reasons

→ Order reference

Vertical
Downwards closing

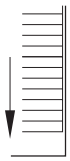

Horizontal

Closure direction **left**

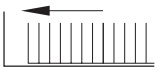

Closure direction **right**

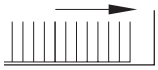

Closure direction **left and right**
A center stop must be mounted at the closing point of double tambour doors

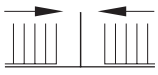

Profile height	Profile type	Inside cabinet width
18 (23/32")	single-walled, smooth	Max. 1200 (47 1/4") (without balance shaft)
		1201–1500 (47 5/16"–59 1/16") (with balance shaft)
24 (15/16")	single-walled, smooth	Max. 1200 (47 1/4") (without balance shaft)
		1201–1500 (47 5/16"–59 1/16") (with balance shaft)
	double-walled, smooth	Max. 1200 (47 1/4")
34 (1 11/32")	single-walled, smooth	Max. 1200 (47 1/4")
	double-walled, smooth	Max. 1200 (47 1/4")

Panel	**A**
Roller shutter	**B**
Bend connector	**C**
Bearing	**D**
Balance shaft	**E**
Guide track	**F**
Glide	**G**
Lock strip	**H**

Dimensional data not binding. Dimensions in mm, inches are approximate. We reserve the right to alter specifications without notice.

Custom Professional Grade Tambour Door Version B

> Material: Extruded Aluminum; Guide Track and Bend: Plastic
> Balance Shaft: Steel and Aluminum

Finish	Profile height	Profile type	Item No.
silver colored anodized	18 (23/32")	single-walled, smooth	442.71.900
	24 (15/16")	single-walled, smooth	442.71.910
		double-walled, smooth	442.71.920
	34 (1 11/32")	single-walled, smooth	442.71.930
		double-walled, smooth	442.71.940
brushed stainless steel, anodized	18 (23/32")	single-walled, smooth	442.71.000
	24 (15/16")	single-walled, smooth	442.71.010
		double-walled, smooth	442.71.020
	34 (1 11/32")	single-walled, smooth	442.71.030
		double-walled, smooth	442.71.040
powder-coated in RAL colors	18 (23/32")	single-walled, smooth	442.71.600
	24 (15/16")	single-walled, smooth	442.71.610
		double-walled, smooth	442.71.620
	34 (1 11/32")	single-walled, smooth	442.71.630
		double-walled, smooth	442.71.640

Supplied With
Roller shutter
Lock strip with glides
Set of guide tracks
4 Bends, 90°
Panel
2 Stop brackets
Balance shaft with bearing, with cabinet widths > 1200 mm (47 1/4")

Note
Balance shaft is not a counter balance, it keeps the unit running parallel to help prevent binding. See next page for details.

→ Application and planning dimensions

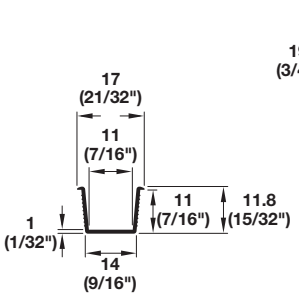

Guide Track

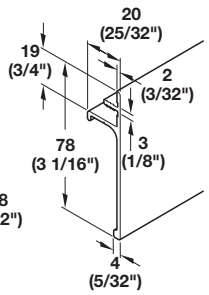

Panel

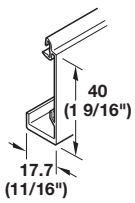

Lock Strip

Dimensional data not binding. Dimensions in mm, inches are approximate. We reserve the right to alter specifications without notice.

Custom Professional Grade Tambour Door Version B

→ Installation without balance shaft

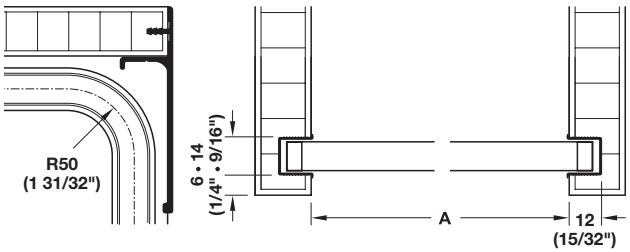

→ Installation with balance shaft

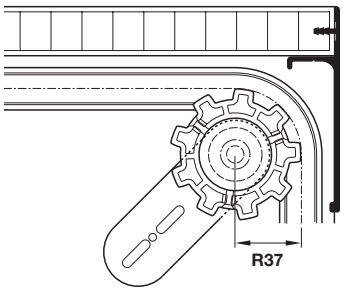

Note
Profile height 24 mm (15/16") double-walled and profile height 34 mm (1 11/32") can only be used for internal cabinet widths up to 1200 mm (47 1/4").

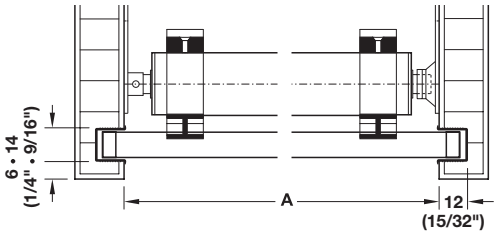

Note
Drillings for installation.

Dimensional data not binding. Dimensions in mm, inches are approximate. We reserve the right to alter specifications without notice.

Custom Professional Grade Tambour Door Versions C1, C2, C3 Module

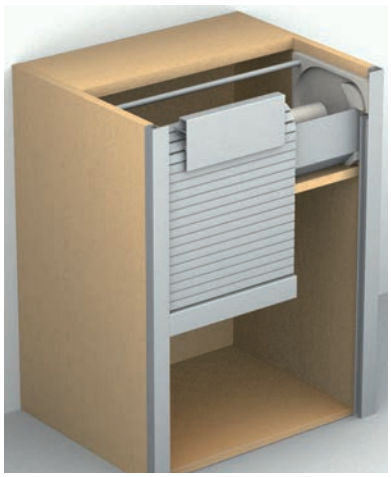

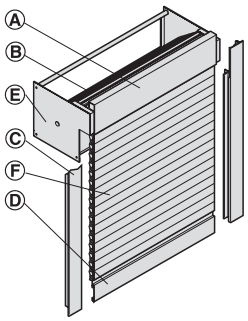

> Height: 180 mm (7 1/16")
> Depth: 220 mm (8 11/16")
> Quick and easy to install
> With screw mounted guide profiles
> Vertical, downwards closing
> Slides into cabinet for overlay or inset installation and install guide profiles

Note
See next page for installation and ordering information.

A	Panel
B	Spring loaded shaft
C	Guide profile
D	Handle profile
E	Cover
F	Roller shutter

→ Cabinet Sizes

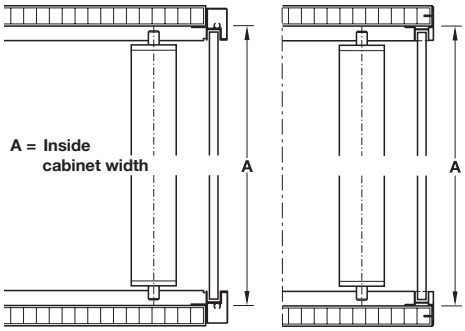

Profile height	Profile type	Internal cabinet width	Internal cabinet height max.
18 (23/32")	single-walled, smooth	382–460 (15 1/16"–18 1/8")	800 (31 1/2")
		461–1500 (18 1/8"–59 1/16")	1900 (74 13/16")
24 (15/16")	single-walled, smooth	382–460 (15 1/16"–18 1/8")	1000 (39 3/8")
		461–1600 (18 1/8"–63")	1900 (74 13/16")
	double-walled, smooth	382–460 (15 1/16"–18 1/8")	1000 (39 3/8")
		461–1800 (18 1/8"–70 7/8")	1900 (74 13/16")
34 (1 11/32")	single-walled, smooth	382–460 (15 1/16"–18 1/8")	1000 (39 3/8")
		461–1600 (18 1/8"–63")	1900 (74 13/16")
	double-walled, smooth	382–460 (15 1/16"–18 1/8")	1000 (39 3/8")
		461–1800 (18 1/8"–70 7/8")	1900 (74 13/16")

Dimensional data not binding. Dimensions in mm, inches are approximate. We reserve the right to alter specifications without notice.

Custom Professional Grade Tambour Door Versions C1, C2, C3 Module

Installation

C1 module **C2 module** **C3 module**

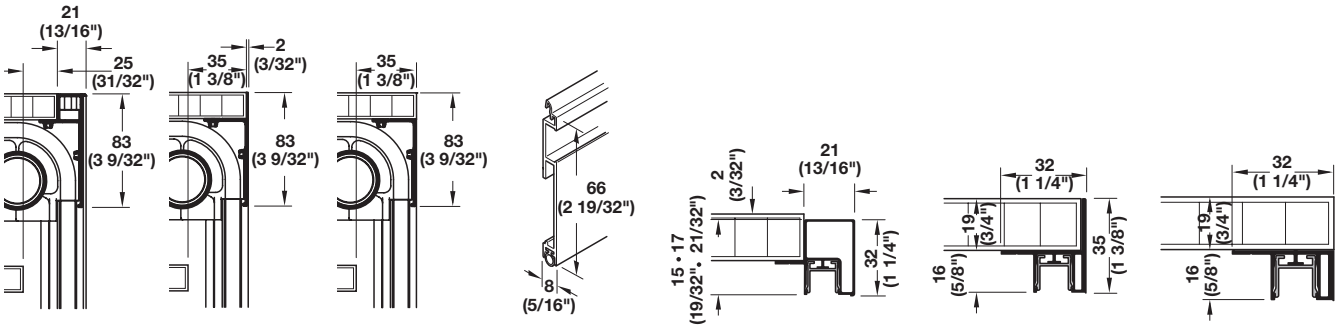

Overlay installation | **Inset installation** | **Inset installation cabinet edge visible** | **S66 handle profile** | **C1 guide profile** | **C2 guide profile** | **C3 guide profile**

> Material: Extruded Aluminum; Glide Plate: Plastic
> Shaft: Steel and Aluminum

Finish	Profile height	Profile type	C1 module	C2 module	C3 module
silver colored anodized	18 (23/32")	single-walled, smooth	443.00.900	443.01.900	443.08.900
	24 (15/16")	single-walled, smooth	443.00.910	443.01.910	443.08.910
		double-walled, smooth	443.00.930	443.01.930	443.08.930
	34 (1 11/32")	single-walled, smooth	443.00.940	443.01.940	443.08.940
		double-walled, smooth	443.00.950	443.01.950	443.08.950
brushed stainless steel, anodized	18 (23/32")	single-walled, smooth	443.00.000	443.01.000	443.08.000
	24 (15/16")	single-walled, smooth	443.00.010	443.01.010	443.08.010
		double-walled, smooth	443.00.030	443.01.030	443.08.030
	34 (1 11/32")	single-walled, smooth	443.00.040	443.01.040	443.08.040
		double-walled, smooth	443.00.050	443.01.050	443.08.050
powder-coated in RAL colors	18 (23/32")	single-walled, smooth	443.00.600	443.01.600	443.08.600
	24 (15/16")	single-walled, smooth	443.00.610	443.01.610	443.08.610
		double-walled, smooth	443.00.630	443.01.630	443.08.630
	34 (1 11/32")	single-walled, smooth	443.00.640	443.01.640	443.08.640
		double-walled, smooth	443.00.650	443.01.650	443.08.650

Supplied With
Made to measure in accordance with order specifications:
1 Roller shutter module, ready for installation
2 Guide profiles

Dimensional data not binding. Dimensions in mm, inches are approximate. We reserve the right to alter specifications without notice.

8

HÄFELE

DRAWER SLIDES

Double-Wall Drawer Systems

Häfele Matrix Box P50
Information 8.4-8.7
Drawer Slides and Profiles 8.8
Railing Sets 8.9
Cross Rails and Brackets 8.10
Front Panels and Brackets and Spacer 8.11-8.12
Height Extension Panels 8.13
Panel Fittings and Glass Panels 8.14-8.15
Häfele Matrix Slim Box A
Information 8.16-8.18
Drawer Slides and Profiles 8.19-8.21
Häfele Matrix Box S35
Information 8.22-8.24
Drawer Slides and Profiles 8.25-8.26
Grass Vionaro
Drawer Sides and Slides 8.27-8.30
Accessories and Front Panels 8.31-8.33
Grass Nova Pro Scala
Drawer Sides and Slides 8.34-8.36
Tipmatic 8.37
Railings, Panels and Accessories 8.38-8.41

Single-Wall Drawer Systems

Grass Zargen and Z Box
Information 8.42-8.43
Zargen Drawer Sides 8.44-8.47
Zargen Accessories 8.47
Side Rails and Dividers 8.48
Zargen Pendaflex 8.49
Z Box Drawer Sides 8.50-8.51
Damper Sets and Soft Close Mechanism 8.52
Zargen and ZBox Machines 8.53

Supra Drawer System 8.54-8.55

Concealed Undermount Slides

Salice
Futura 16 and 19 8.56-8.57
Shelf Slides 8.58
Closet Slides 8.59
Futura Push 8.60-8.62
Grass
Dynapro 8.63-8.70
Elite Plus 8.71-8.73
Sensomatic Door Opener 8.74-8.75

Full Extension Slides 8.76
Closet Slides 8.77
Accuride
Eclipse 8.78-8.80

Dimensional data not binding. Dimensions in mm, inches are approximate. We reserve the right to alter specifications without notice.

Ball Bearing Slides

Accuride
Information 8.81-8.82
3/4 Extension – 35 lbs. 8.83
3/4 Extension – 75 lbs. 8.84-8.85, 8.108
Full Extension – 100 lbs. 8.86-8.87, 8.89, 8.91-8.96, 8.100-8.102
Full Extension – 90 lbs. 8.88, 8.90
Full Extension – 150 lbs. 8.97, 8.99, 8.103
Full Extension – 75/200 lbs. 8.98
Full Extension – 180 lbs. 8.104
Full Extension – 200 lbs. 8.105
Full Extension – 150/350 lbs. 8.106
Full Extension – 600 lbs. 8.107-8.108
Two Way Slides – 50/100 lbs. 8.109-8.110
Shelf Slide – 100 lbs. 8.111
Lock-Out – 110 lbs. 8.112
Over Extension – 85-150 lbs. 8.113
Pantry Slide – 175 lbs. 8.114-8.115
Linear Motion Track System 8.116-8.117

Stainless Steel Full Extension 8.118-8.119
Hafele Econo Slide – Full Extension – 100 lbs. 8.120
Premium Over Extension – 150 lbs. 8.121

Epoxy/Plastic Slides and Accessories

3/4 Extension – 44 lbs. 8.122
Soft Closing Mechanism 8.123
Spacers 8.124
Rear Mounting Brackets 8.125
Drawer Guide Locating Tool 8.125
Plastic Rails 8.126
Salice Stabilizer 8.127
QuikTray 8.128-8.129
X-Series Brackets 8.130
Brackets for Undermount Slides 8.131
Drawer Front Adjustment Fittings 8.132

Pull-Out Cabinet Slides

Full Extension – 275 lbs. 8.133
EKU Forte – 374 lbs. 8.134-8.135
Full Extension – 440 lbs. 8.136

Dimensional data not binding. Dimensions in mm, inches are approximate. We reserve the right to alter specifications without notice.

Häfele Matrix Box P50

- > Integrated soft close
- > Quick and simple assembly and installation
- > Tool-free drawer front assembly and removal
- > Numerous accessories are available to customize drawers
- > Heavy duty weight rating: 50 or 70 kg (110 or 154 lbs.)
- > Convenient adjustment location allows for quick and simple height and side adjustment from the top

soft&silent

Service+

With integrated soft closing and self-closing mechanisms

A: Cabinet runner
B: Drawer sides with cover caps
C: Front fixing brackets

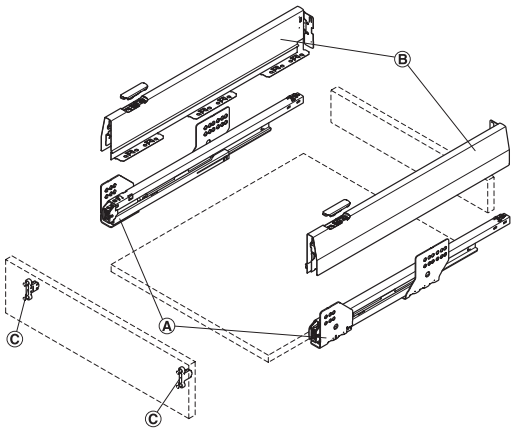

With Push-to-Open

A: Cabinet runner
B: Drawer sides with cover caps
C: Front fixing bracket
D: Tipmatic device and rod

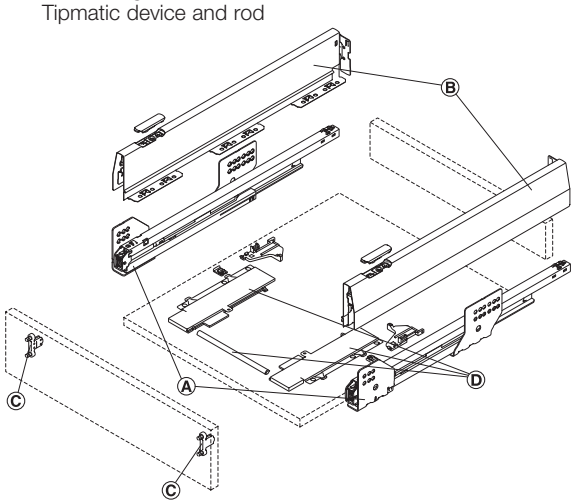

Convenient height and side adjustment from the top.

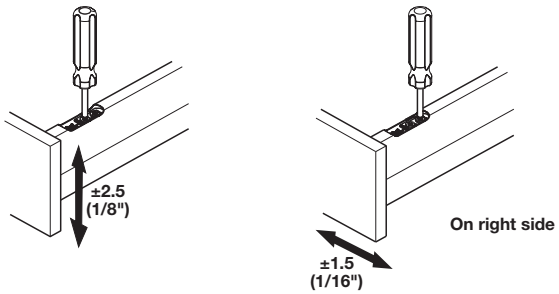

No tools required for mounting and removing the drawer front.

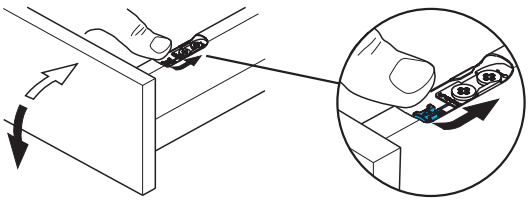

Calculation of Drawer Dimensions

- > 16 mm (5/8") material required for drawer bottom and back
- > Drawer bottom width = Internal cabinet width - 62 mm (2 7/16")
- > Drawer bottom depth = Profile length - 3 mm (1/8")
- > Drawer back height = 69 mm (2 11/16") for standard profile
  157 mm (6 3/16") with extension panel height
- > Drawer back width = same as bottom
- > Drawer front fixing bracket positioning = ICW-44 mm (1 3/4") centered

White

Metallic anthracite

Champagne

Dimensional data not binding. Dimensions in mm, inches are approximate. We reserve the right to alter specifications without notice.

Häfele Matrix Box P50

Drawer side height 92 mm (3 5/8")

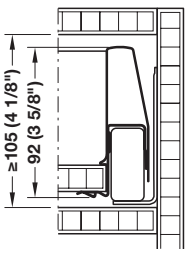

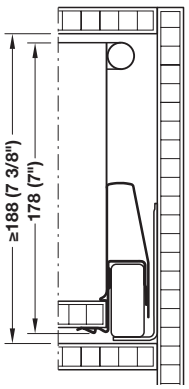

With round or rectangular railing

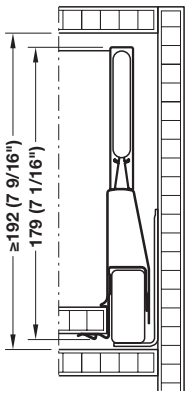

With panel holder

→ Drawer side design: Internal drawer and internal pull out

Drawer side height 92 mm (3 5/8")

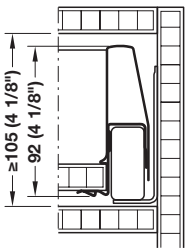

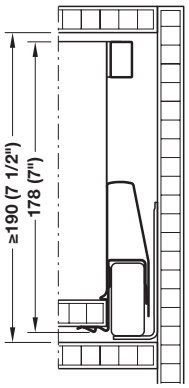

With rectangular railing

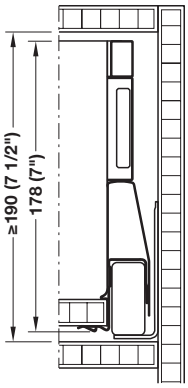

With rectangular railing and panel holder

→ Cutting dimensions for panel

Internal drawer and internal pull out

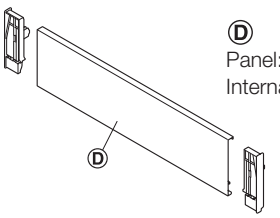

Ⓓ
Panel:
Internal cabinet width – 9 mm

Dimensional data not binding. Dimensions in mm, inches are approximate. We reserve the right to alter specifications without notice.

Häfele Matrix Box P50

Service+

→ Cutting dimensions for panels (panel thickness of 16 mm (5/8")

Base panel

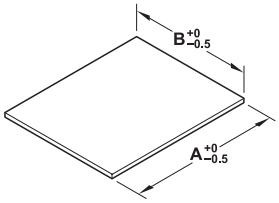

Rear panel

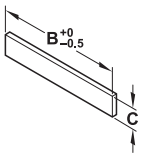

A = nominal length – 3 mm
B = internal cabinet width – 62 mm
C = height

Drawer side height	Rear panel height C
Railing/height extension side panel/panel holder 92 mm (3 5/8")	157 mm (6 3/16")
Standard slide 92 mm (3 5/8")	69 mm (2 11/16")

→ Drilling Pattern for Cabinet

For drawer side height 92 mm (3 5/8") and 115 mm (4 1/2")

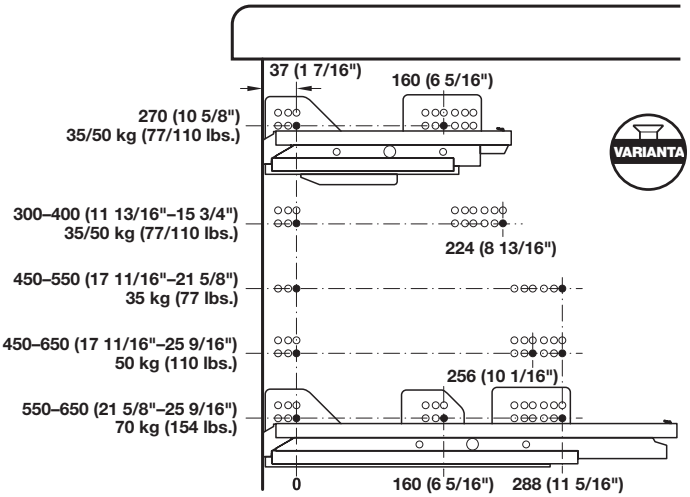

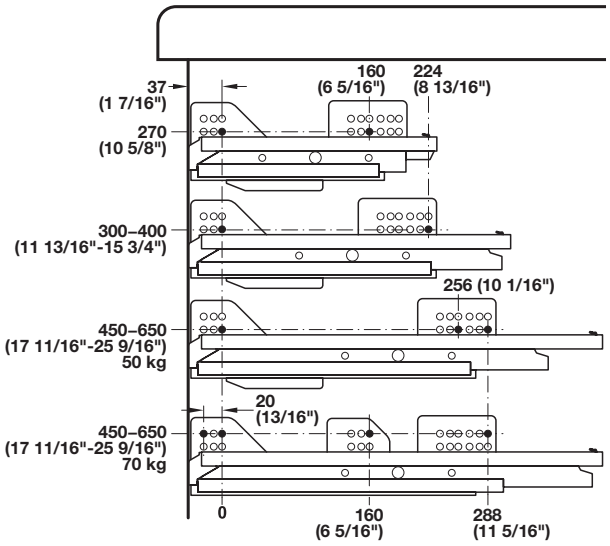

Drawer and pull out:
3rd screw hole

Internal drawer and pull out:
With ≤19 mm (3/4") wood panel: 1st screw hole
With aluminum panel: 2nd screw hole

Front gap 1 mm (1/16")

Note:
The bottom drill holes in the runner 50/70 kg (110/154 lbs.) correspond to the series drilled holes.

Varianta screws page 12.16

Dimensional data not binding. Dimensions in mm, inches are approximate. We reserve the right to alter specifications without notice.

Häfele Matrix Box P50

Service+

→ Installation and removal of drawer

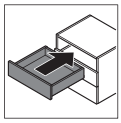

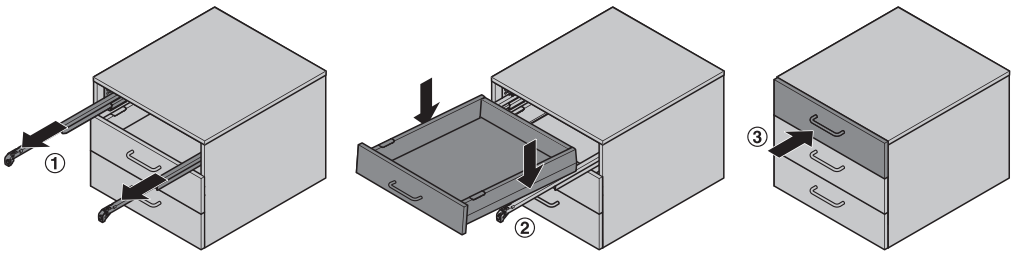

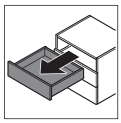

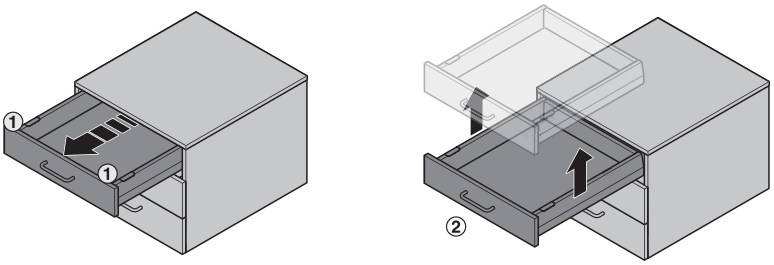

Internal installation height

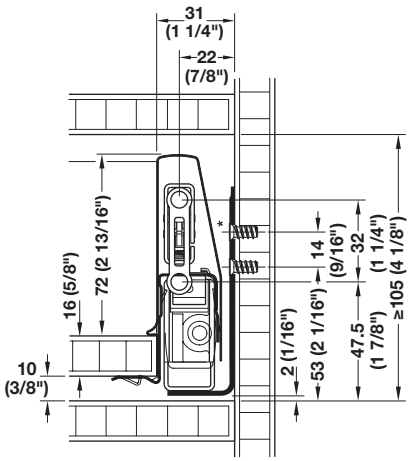

With integrated soft closing
and self-closing mechanisms

Dimensional data not binding. Dimensions in mm, inches are approximate. We reserve the right to alter specifications without notice.

Häfele Matrix Box P50

→ Drawer Slides and Side Profiles

> Heavy duty weight rating: 50 or 70 kg (110 or 154 bs.)
> Rack and pinion provides controlled and gentle movement
> Full extension slides allow for maximum access to drawer
> 16 mm (5/8") material is required for the drawer bottom and back
> Profile height: 92 mm (3 5/8")
> Material: Profiles: Steel, powder-coated; Slides: Steel; Finish: zinc-plated; Cover Caps: Plastic

Service+

→ Full Extension with Soft Close

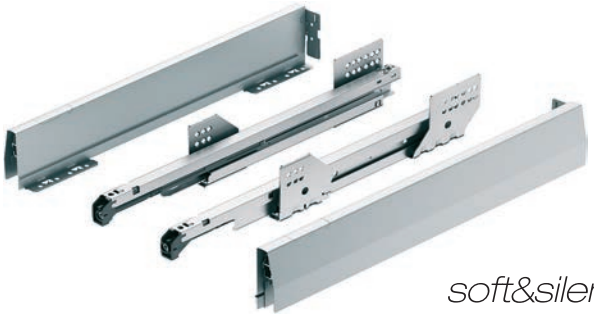

	white		metallic anthracite		champagne	
Length	**50 kg (110 lbs.)**	**70 kg (154 lbs.)**	**50 kg (110 lbs.)**	**70 kg (154 lbs.)**	**50 kg (110 lbs.)**	**70 kg (154 lbs.)**
270 (10 5/8")	551.54.720	-	551.54.320	-	551.54.820	-
300 (11 13/16")	551.54.721	-	551.54.321	-	551.54.821	-
350 (13 3/4")	551.54.722	-	551.54.322	-	551.54.822	-
400 (15 3/4")	551.54.723	-	551.54.323	-	551.54.823	-
450 (17 11/16")	551.54.724	-	551.54.324	-	551.54.824	-
500 (19 11/16")	551.54.725	-	551.54.325	-	551.54.825	-
550 (21 5/8")	551.54.726	551.54.746	551.54.326	551.54.346	551.54.826	551.54.846
600 (23 5/8")	551.54.727	551.54.747	551.54.327	551.54.347	551.54.827	-
650 (25 9/16")	551.54.728	551.54.748	551.54.328	551.54.348	551.54.828	-

Supplied With Left/right drawer slide, Left/right cabinet profile, 2 Cover caps, Pre-attached back brackets

Note Order drawer front fixing brackets separately.

→ Full Extension Push-to-Open with Soft Close

> With integrated soft closing and self-closing mechanisms
> Weight capacity: 50 kg (110 lbs.)
> Drawer side height: 92 mm (3 5/8") for cabinet width up to 1200 mm (47 1/4")

Length	white	metallic anthracite
450 (17 11/16")	513.30.734	513.30.334
500 (19 11/16")	513.30.735	513.30.335
550 (21 5/8")	513.30.736	513.30.336

Supplied With
Left/right drawer sides with rear panel fitting
Left/right cabinet runners
2 Cover caps with Häfele logo
Push-to-open element (553.50.995)
Synchronization rod (551.90.161)

Varianta screws page 12.16

Dimensional data not binding. Dimensions in mm, inches are approximate. We reserve the right to alter specifications without notice.

Häfele Matrix Box P50

Service+

→ Side Railing Set, round

VARIANTA ⌀5 Pan Head

> Finish coordinates with profile
> Rails offer +/- 2 mm (1/16") tilt adjustment
> Ø: 11 mm (7/16")
> Material: Slides: Steel, epoxy-coated; Adapters/Connector: Plastic

Length	anthracite	champagne	white
270 (10 5/8")	553.59.400	553.59.800	553.59.600
300 (11 13/16")	553.59.401	553.59.801	553.59.601
350 (13 3/4")	553.59.402	553.59.802	553.59.602
400 (15 3/4")	553.59.403	553.59.803	553.59.603
450 (17 11/16")	553.59.404	553.59.804	553.59.604
500 (19 11/16")	553.59.405	553.59.805	553.59.605
550 (21 5/8")	553.59.406	553.59.806	553.59.606
600 (23 5/8")	553.59.407	553.59.807	553.59.607
650 (25 9/16")	553.59.408	553.59.808	553.59.608

Supplied With
2 Rails
4 Front brackets: 2 press-fit and 2 screw mount
2 Rear panel holders

→ Cross Rail, round

> Cross rail is cut 68 mm (2 11/16") less than the inside cabinet width
> Length: 1102 mm (43 1/8")
> Ø: 11 mm (7/16")
> Material: Steel, epoxy-coated

Finish	Item No.
anthracite	553.59.434
champagne	553.59.834
white	553.59.634

Note
Required for 185 × 40 mm (7 5/16" x 1 9/16") Internal Drawer Bracket, see page **8.11**.

Pan head screws	pages 12.9-12.10
Varianta screws	page 12.16

→ Side Railing Set, rectangular

> Material: Slides: Steel, epoxy-coated; Adapters/Connector: Plastic

Length	white	anthracite
270 (10 5/8")	551.60.720	551.60.320
300 (11 13/16")	551.60.721	551.60.321
350 (13 3/4")	551.60.722	551.60.322
400 (15 3/4")	551.60.723	551.60.323
450 (17 11/16")	551.60.724	551.60.324
500 (19 11/16")	551.60.725	551.60.325
550 (21 5/8")	551.60.726	551.60.326
600 (23 5/8")	551.60.727	551.60.327
650 (25 9/16")	551.60.728	551.60.328

→ Cross Rail, rectangular

> Can be shortened
> Cut = internal cabinet width - 77.5 mm (3 1/16")
> Length: 1090.5 mm (42 15/16")
> Material: Steel

Finish	Item No.
metallic anthracite	513.70.969
white	513.70.769

Dimensional data not binding. Dimensions in mm, inches are approximate. We reserve the right to alter specifications without notice.

Häfele Matrix Box P50

Service+

→ Drawer Front Fixing Brackets

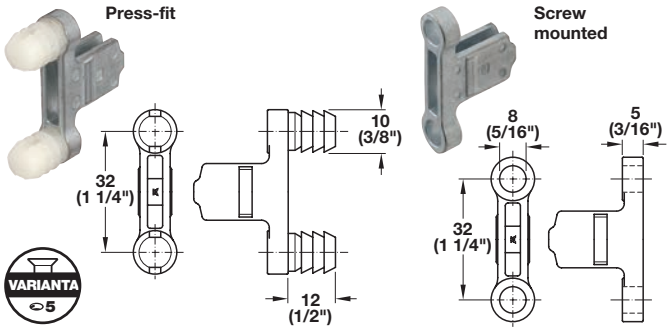

> Material: Zinc

Mounting	Item No.
Press-fit	553.59.995
Screw mounted	553.59.991

Note
Order separately, not included in the set.
2 pcs. required for one pair of slides.
013.20.949 screw is recommended, see page **12.16**.

→ Cross Rail Holder, round

> Material: Plastic

Finish	Item No.
anthracite	553.59.439
champagne	553.59.839
white	553.59.639

→ Front Fixing Jig

> For easy marking of the drill holes on drawer front
> Material: Plastic

Color	Item No.
gray/red	553.69.035

→ Cross Rail Holder, rectangular

> For clipping onto rectangular cross rail
> Material: Plastic

Color	Item No.
metallic anthracite	513.70.389
white	513.70.789

Note
Order 2 cross railing holders for each cross rail.

→ Cover Cap, replacements

> Material: Plastic

Version	anthracite	champagne	white
Blank	551.61.381	553.59.881	551.61.781
With Häfele logo	551.61.380	553.59.880	551.61.780

Supplied With
1 Right/left cover caps

→ Insertion Tool

> For drawer front fixing bracket
> Material: Aluminum/Wood

	Item No.
	553.69.020

Dimensional data not binding. Dimensions in mm, inches are approximate. We reserve the right to alter specifications without notice.

Häfele Matrix Box P50

> Front panel finish matches perfectly to side profiles
> Available in three lengths; can be cut-to-size
> Use with or without rails
> Height: 95 mm (3 3/4")

Service+

→ Front Panels

> For internal drawers
> Front panel is cut 80 mm (3 1/8") less than the inside cabinet width
> Material: Aluminum

Length	metallic anthracite	champagne	white
488 (19 3/16")	551.61.311	553.61.811	553.61.611
788 (31")	551.61.315	553.61.815	553.61.615
1088 (42 13/16")	551.61.319	553.61.819	553.61.619

→ Pan Head Screw

> #6 x 3/4"
> Material: Steel, epoxy-coated

Finish	Item No.
black oxide	010.83.045

→ Internal Drawer Brackets

> Easy assembly to panel, profile and rail with #6 × 3/4" Pan Head screw (order separately, see below)
> H x W: 95 × 40 mm (3 3/4" × 1 9/16")
> Material: Plastic

Color	Item No.
anthracite	551.61.392
champagne	553.61.892
white	553.61.692

→ Internal Drawer Brackets

> For use with railing set, order separately
> Easy assembly to panel, profile and rail with #6 × 3/4" pan head screw, order separately, to the right
> H x W: 185 × 40 mm (7 5/16" × 1 9/16")
> Material: Plastic

Color	Item No.
anthracite	551.61.391
champagne	553.61.891
white	553.61.691

Note
Requires cross rail and railing set, order separately, see page **8.9**.

Cross rail and railing set page 8.9

Dimensional data not binding. Dimensions in mm, inches are approximate. We reserve the right to alter specifications without notice.

Häfele Matrix Box P50

Service+

→ Front Panel Stabilizing Plate

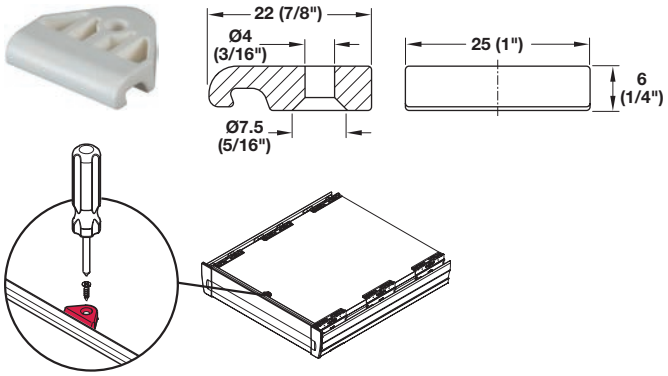

> For stabilizing aluminum panels and panel profiles, and preventing the front panel from bending when pulling out the drawer
> Material: Plastic

Color	Item No.
white	553.61.780

→ Clip Set for Internal Drawer

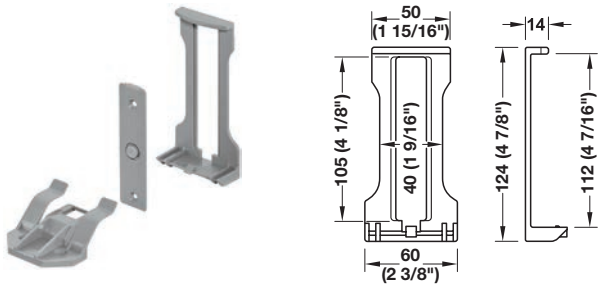

> For internal drawer
> For automatic opening of the internal drawer when front panel is pulled out
> Material: Plastic

Color	Item No.
gray	559.91.991
dark gray (matches metallic anthracite)	559.91.992

→ Spacers

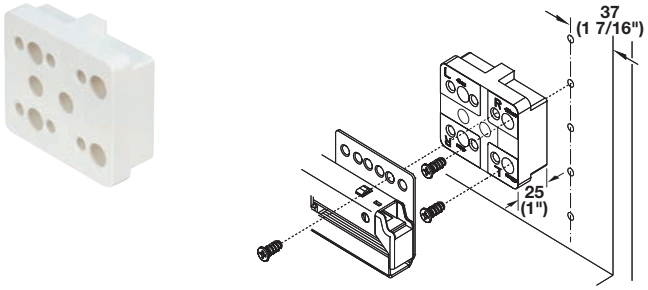

> Can be used as blocking in face frame applications
> Required for internal drawers behind a hinged door
> Material: Plastic

Color	Item No.
white	553.62.700

Note
Order separately, not included in the set.
2 pcs. required for each slide.

Dimensional data not binding. Dimensions in mm, inches are approximate. We reserve the right to alter specifications without notice.

Häfele Matrix Box P50

→ Height Extension Panels

- > For increasing the height of the enclosed internal space of the pull out by 88 mm (3 7/16") to a total height of 160 mm (6 5/16")
- > Quickly and simply extends the height of the drawer by clipping over the railing and onto the drawer side profile
- > Panel finish matches perfectly to the profile
- > Material: Steel, epoxy-coated

Note Drawer organization accessories can be found in Section 3, Kitchen Accessories.

Service+

Length	metallic anthracite	champagne	white
270 (10 5/8")	551.60.300	553.60.800	553.60.600
300 (11 13/16")	551.60.301	553.60.801	553.60.601
350 (13 3/4")	551.60.302	553.60.802	553.60.602
400 (15 3/4")	551.60.303	553.60.803	553.60.603
450 (17 11/16")	551.60.304	553.60.804	553.60.604
500 (19 11/16")	551.60.305	553.60.805	553.60.605
550 (21 5/8")	551.60.306	553.60.806	553.60.606
600 (23 5/8")	551.60.307	553.60.807	553.60.607
650 (25 9/16")	551.60.308	553.60.808	553.60.608

Note Requires railing set

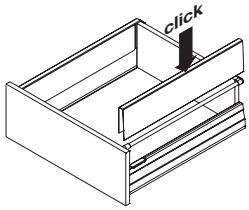

Internal installation height

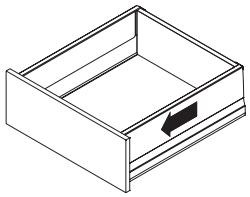

Rear panel installation dimensions

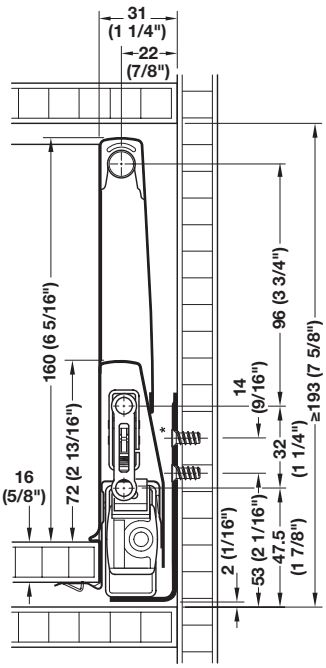

* Top row series drilled holes and screws are not required for sets with weight capacity of 35 kg (77 lbs.)

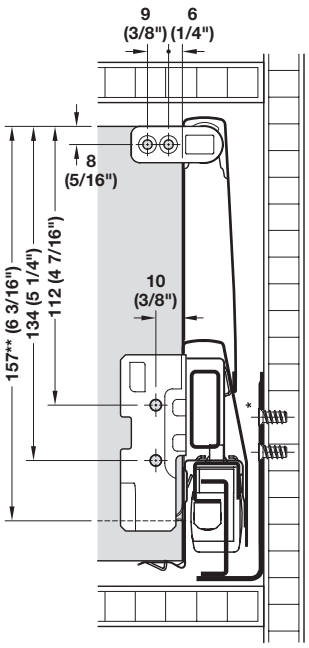

** Rear panel height

You can change the look of your drawer and optimize storage space in three simple steps.

Drawer Side Profile

Drawer Side Profile, Railing and Cross Rail

Drawer Side Profile, Railing and Height Extension Panel

Note
Cross Rail cannot be used with height extensions.

Dimensional data not binding. Dimensions in mm, inches are approximate. We reserve the right to alter specifications without notice.

Häfele Matrix Box P50

> For individual design with 8 mm (5/16") thick panel made from glass, wood, or acrylic
> The tilting angle of the drawer front panel can be adjusted using slotted screw
> With tension spring for mounting the panel
> For placing onto drawer sides
> Screw mounts to drawer front and rear panel
> Cover caps and panel holder clip mount at rear
> Height: 86 mm (3 3/8")
> Material: Steel

Service+

→ Panel Fittings

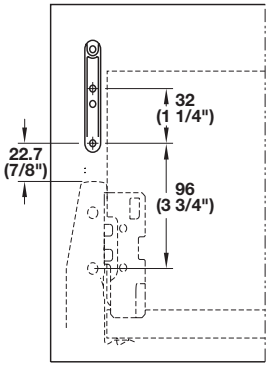

Drilling pattern/screw mount position for front fixing bracket

Finish	Item No.
white	553.60.699
metallic anthracite	551.60.999

Supplied With
2 Front fixing brackets
2 Panel holders with tension spring, adjustable screw for front bracket and insert
2 Cover caps
2 Panel holders, rear
2 Rear panel fittings

Note
Please order Matrix drawer set, drawer side height 92 mm (3 5/8"), separately, see page **8.8**

Dimensional data not binding. Dimensions in mm, inches are approximate. We reserve the right to alter specifications without notice.

Häfele Matrix Box P50

> Height: 86 mm (3 3/8")
> Material thickness: 8 mm (5/16")
> Flint Glass

Service+

→ Glass Panel

Length	clear	frosted
270 (10 5/8")	553.60.440	553.60.140
300 (11 13/16")	553.60.441	553.60.141
350 (13 3/4")	553.60.442	553.60.142
400 (15 3/4")	553.60.443	553.60.143
450 (17 11/16")	553.60.444	553.60.144
500 (19 11/16")	553.60.445	553.60.145
550 (21 5/8")	553.60.446	553.60.146
600 (23 5/8")	553.60.447	553.60.147
650 (25 9/16")	553.60.448	553.60.148

Internal installation height

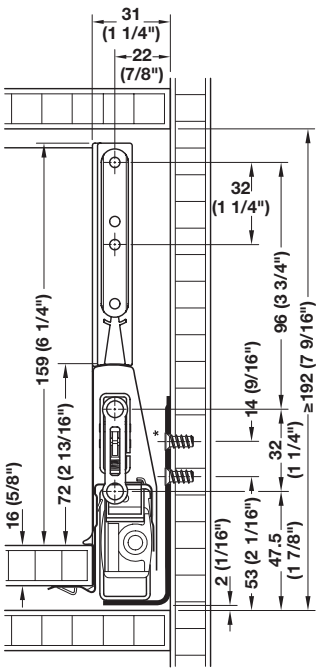

* Top row series drilled holes and screws are not required for sets with weight capacity of 35 kg (77 lbs.)

Rear panel installation dimensions

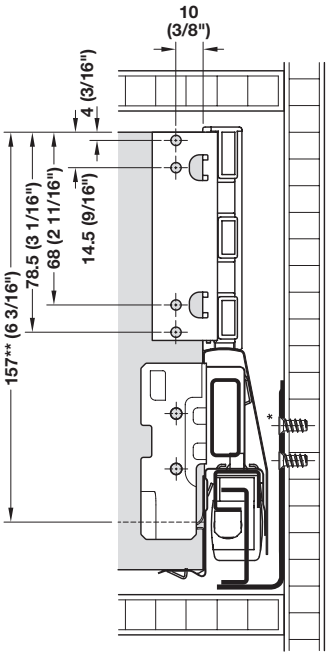

** Rear panel height

Note
Installation dimensions for individually manufactured panels:
Material thickness: 8 mm (5/16")
Height: 82 mm (3 1/4")
Panel length = nominal length - 45 mm (1 3/4")

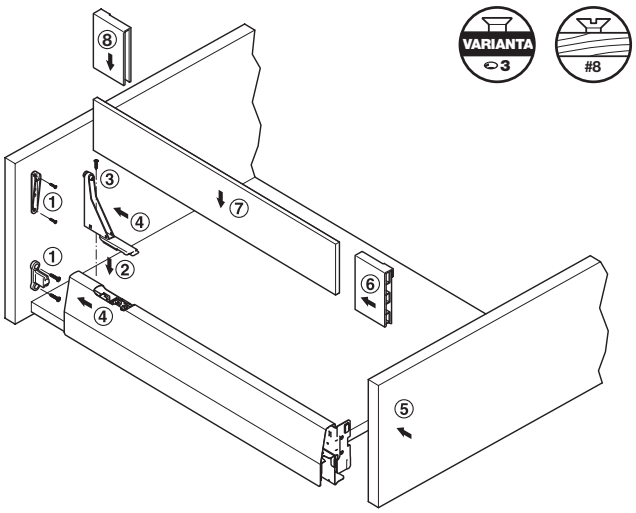

Wood screws	page 12.15
Varianta screws	page 12.16

Dimensional data not binding. Dimensions in mm, inches are approximate. We reserve the right to alter specifications without notice.

Häfele Matrix Slim Box A

> Streamlined 13 mm (1/2") design
> 3 Heights: 89, 128, 175 mm (3 1/2", 5 1/16", 6 7/8")
> 7 Lengths: 270–550 mm (10"–22")
> Full extension, soft close undermount slides with 3D adjustable fixing clips

3 Drawer Side Colors are Available

White | Gray | Anthracite

A Drawer slides
B Thin-walled drawer sides with cover caps
C Front fixing bracket
D Snap-in fixing clips

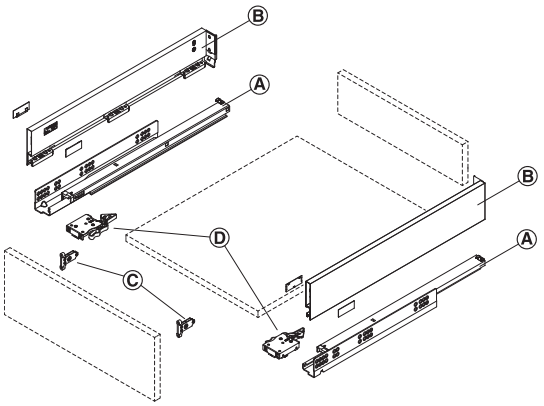

Drawer Side Design

Drawer side height 89 mm (3 1/2")

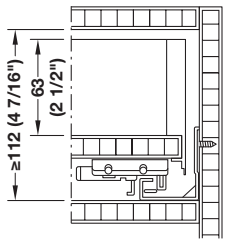

Drawer side height 128 mm (5 1/16")

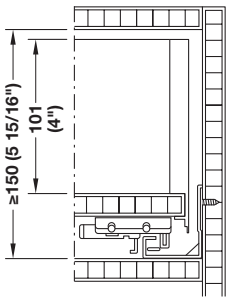

Drawer side height 175 mm (6 7/8")

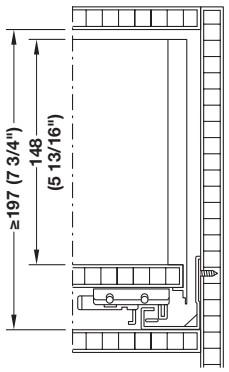

Dimensional data not binding. Dimensions in mm, inches are approximate. We reserve the right to alter specifications without notice.

Häfele Matrix Slim Box A

Cutting dimensions for panels and front panels (panel thickness of 16 mm (5/8")

Base panel

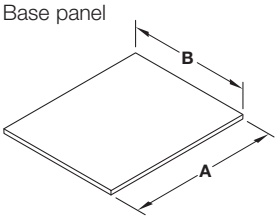

Front panel

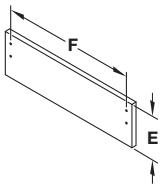

Rear panel

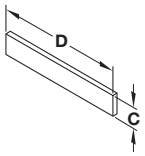

Drawer side height E	Weight capacity	Rear panel height C
89 (3 1/8")	30 kg (66 lbs.)	63 (2 1/2")
128 (5 1/16")	30 kg (66 lbs.)	101 (4")
175 (6 7/8")	30 kg (66 lbs.)	148 (5 13/16")

A = nominal length - 10 mm (3/8")
B = internal cabinet width - 19 mm (3/4")
C = rear panel height (see chart)
D = internal cabinet width - 40 mm (1 9/16")
F = internal cabinet width - 29 mm (1 1/8")
E = front panel height (see chart)

Drilling Pattern for Cabinet

For drawer side height 89, 128, 175 mm (3 1/2", 5 1/16", 6 7/8")

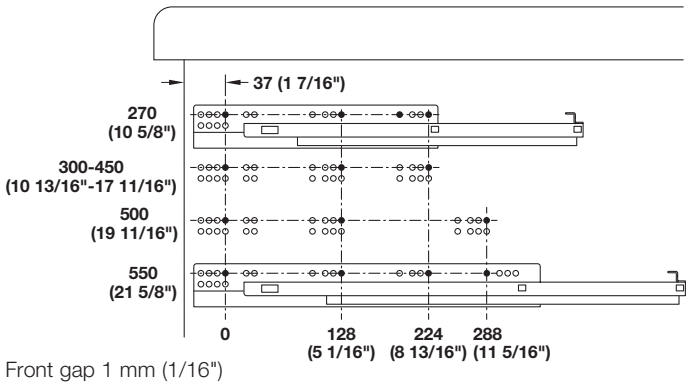

Front gap 1 mm (1/16")

Calculation of the internal drawer space dimensions

Internal drawer width, e.g.:	
External cabinet width	600 mm (23 5/8")
- (2 x side panel thickness)	- (2 x 19 mm (3/4") = 38 mm (1 1/2")
- (2 x installation dimension)	- (2 x 20 mm (13/16") = 40 mm (1 9/16")
= internal drawer width	= 522 mm (20 9/16")

External cabinet width	300 (11 13/16")	400 (15 3/4")	500 (19 11/16")	600 (23 5/8")	800 (31 1/2")
Side panel thickness	Internal drawer width				
16 (5/8")	228 (9")	328 (12 15/16")	428 (16 7/8")	528 (20 13/16")	728 (28 11/16")
19 (3/4")	222 (8 3/4")	322 (12 11/16")	422 (16 5/8")	522 (20 9/16")	722 (28 7/16")

Internal drawer depth, e.g.:	
Nominal length cabinet runner	500 mm (19 11/16")
- rear panel thickness	- 16 mm (5/8")
= internal drawer depth	= 484 mm (19 1/16")

Internal cabinet depth

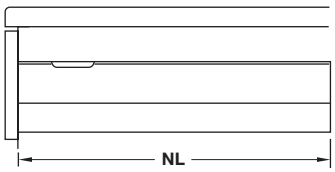

Min. internal cabinet depth = nominal length NL + 20 mm (13/16")

Dimensional data not binding. Dimensions in mm, inches are approximate. We reserve the right to alter specifications without notice.

Häfele Matrix Slim Box A

Adjustment

Convenient height and side adjustment, tilt and front gap adjustment when installed.

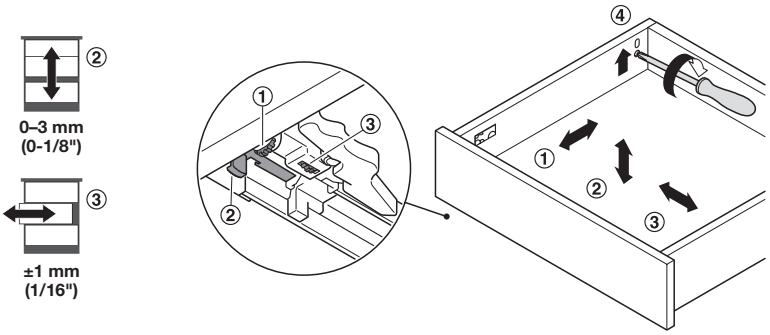

① Front gap adjustment 0–3 mm (0–1/8")
② Height adjustment 0–3 mm (0–1/8")
③ Side adjustment ±1 mm (1/16")
④ Tilt adjustment 0–3 mm (0–1/8")

No tool required for mounting; remove front with screwdriver.

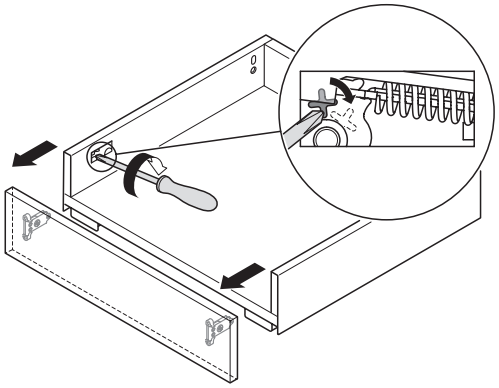

Installation and Removal of the Drawer

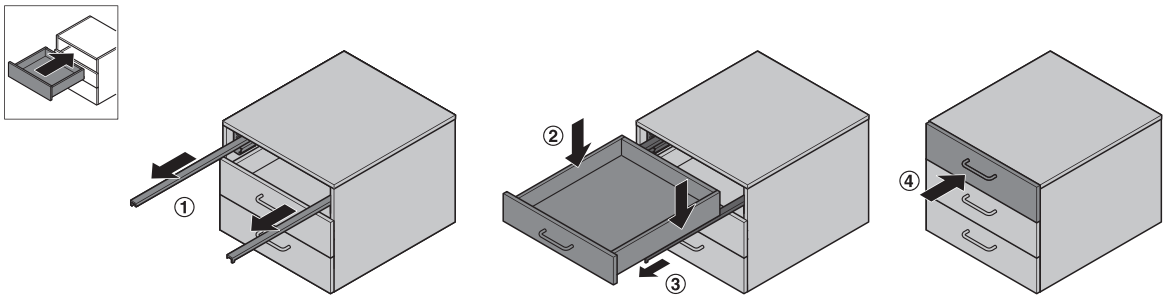

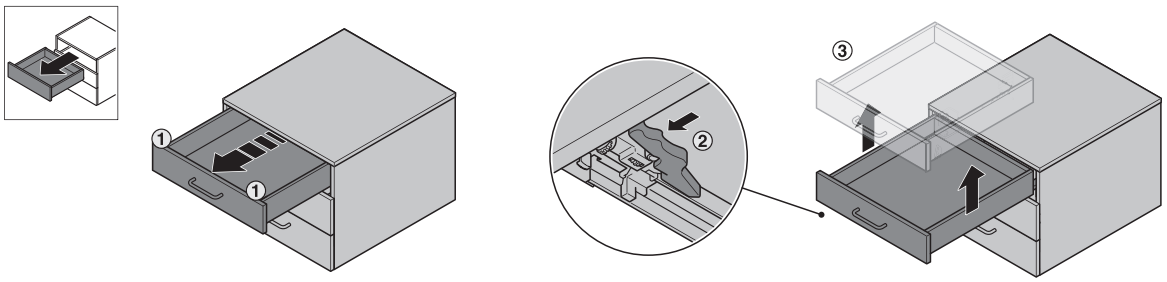

8

Drawer Slides

Dimensional data not binding. Dimensions in mm, inches are approximate. We reserve the right to alter specifications without notice.

Häfele Matrix Slim Box A

> Drawer side height: 89 mm (3 1/2")
> Weight capacity: 30 kg (66 lbs.)
> Drawer side width: 13 mm (1/2")
> Full extension, with integrated soft closing and rear panel fitting
> Material: Steel, powder-coated; Slides: Steel, galvanized

→ Drawer Set

Length	white	gray	anthracite
270 (10 5/8")	552.26.720	552.26.620	552.26.520
300 (11 13/16")	552.26.721	552.26.621	552.26.521
350 (13 3/4")	552.26.722	552.26.622	552.26.522
400 (15 3/4")	552.26.723	552.26.623	552.26.523
450 (17 11/16")	552.26.724	552.26.624	552.26.524
500 (19 11/16")	552.26.725	552.26.625	552.26.525
550 (21 5/8")	552.26.726	552.26.626	552.26.526

Supplied With
Left/right thin-walled drawer sides with rear panel fitting
Left/right drawer slides
Left/right fixing clips
Left/right front fixing brackets for screw fixing
Left/right cover caps

Internal installation height

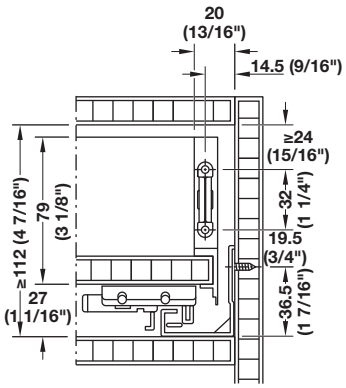

Rear panel installation dimensions

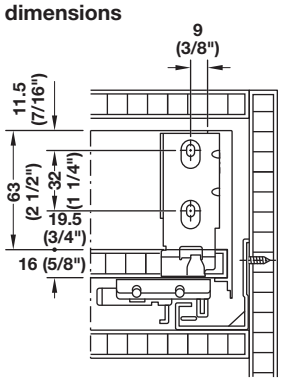

Dimensional data not binding. Dimensions in mm, inches are approximate. We reserve the right to alter specifications without notice.

Häfele Matrix Box Slim A

→ Drawer Set

- > Drawer side height: 128 mm (5 1/16")
- > Weight capacity: 30 kg (66 lbs.)
- > Drawer side width: 13 mm (1/2")
- > Full extension, for maximum access to drawer with integrated soft close
- > Material: Steel, powder-coated; Slides: Steel, galvanized

Length	white	gray	anthracite
270 (10 5/8")	552.27.720	552.27.620	552.27.520
300 (11 13/16")	552.27.721	552.27.621	552.27.521
350 (13 3/4")	552.27.722	552.27.622	552.27.522
400 (15 3/4")	552.27.723	552.27.623	552.27.523
450 (17 11/16")	552.27.724	552.27.624	552.27.524
500 (19 11/16")	552.27.725	552.27.625	552.27.525
550 (21 5/8")	552.27.726	552.27.626	552.27.526

Supplied With
Left/right thin-walled drawer sides with rear panel fitting
Left/right drawer slides
Left/right fixing clips
Left/right front fixing brackets for screw fixing
Left/right cover caps

Internal installation height

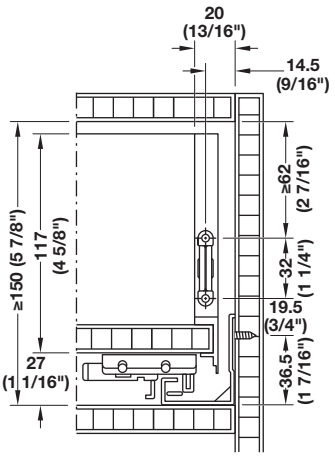

Rear panel installation dimensions

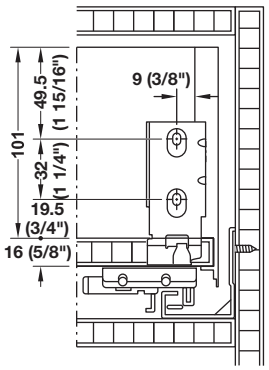

Dimensional data not binding. Dimensions in mm, inches are approximate. We reserve the right to alter specifications without notice.

Häfele Matrix Box Slim A

→ Drawer Set

- > Drawer side height: 175 mm (6 7/8")
- > Weight capacity: 30 kg (66 lbs.)
- > Drawer side width: 13 mm (1/2")
- > Full extension, for maximum access to drawer with integrated soft close
- > Material: Steel, powder-coated; Slides: Steel, galvanized

Length	white	gray	anthracite
270 (10 5/8")	552.28.720	552.28.620	552.28.520
300 (11 13/16")	552.28.721	552.28.621	552.28.521
350 (13 3/4")	552.28.722	552.28.622	552.28.522
400 (15 3/4")	552.28.723	552.28.623	552.28.523
450 (17 11/16")	552.28.724	552.28.624	552.28.524
500 (19 11/16")	552.28.725	552.28.625	552.28.525
550 (21 5/8")	552.28.726	552.28.626	552.28.526

Supplied With
Left/right thin-walled drawer sides with rear panel fitting
Left/right drawer slides
Left/right fixing clips
Left/right front fixing brackets for screw fixing
1 pair of L-shaped connecting brackets
Left/right cover caps

Internal installation height

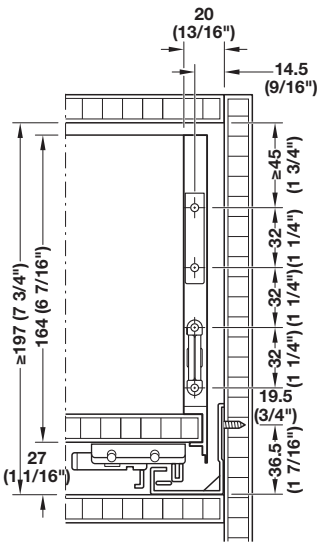

Rear panel installation dimensions

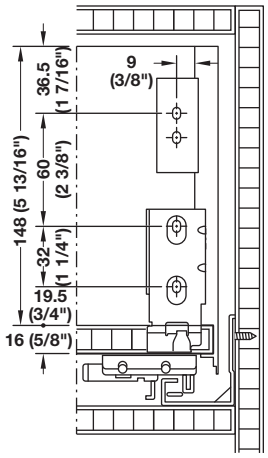

Dimensional data not binding. Dimensions in mm, inches are approximate. We reserve the right to alter specifications without notice.

Häfele Matrix Box S35

3 Drawer Side Finishes are Available

White
RAL 9003

Gray
RAL 7047

Anthracite
RAL 7043

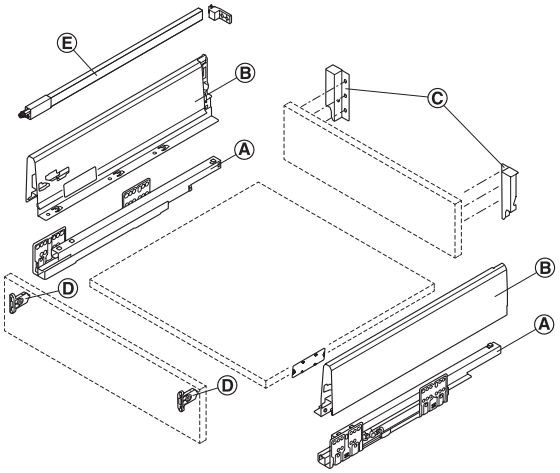

Drawer System
A: Drawer slides with soft close
B: Drawer side profiles
C: Rear panel fitting
D: Front fixing brackets
E: Side railing, round/straight-edged

Drawer Side Design

Drawer side height 84 mm (3 5/16")

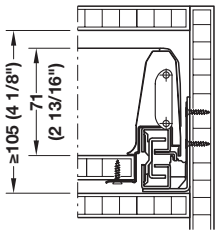

Drawer side height 120 mm (4 3/4")

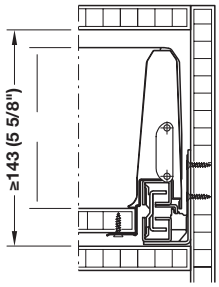

Drawer side height 135 mm (5 5/16")

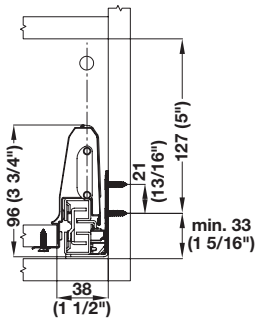

Drawer side height 199 mm (7 13/16")

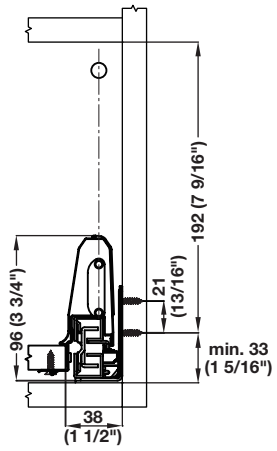

Dimensional data not binding. Dimensions in mm, inches are approximate. We reserve the right to alter specifications without notice.

Häfele Matrix Box S35

Cutting dimensions for panels and front panels (panel thickness of 16 mm (5/8")

Base panel

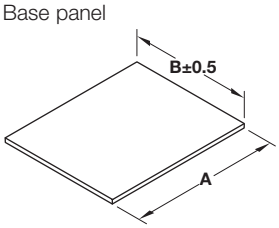

Front panel

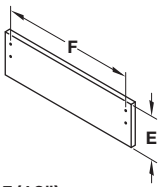

Rear panel

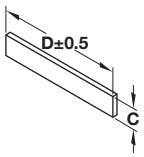

Drawer side height E	Weight capacity	Rear panel height C
84 (3 5/16")	35 kg (77 lbs.)	84 (3 5/16")
120 (4 3/4")	35 kg (77 lbs.)	120 (4 3/4")
84 + railing = 135 (5 5/16")	35 kg (77 lbs.)	135 (5 5/16")
84 + 2 railings = 199 (7 13/16")	35 kg (77 lbs.)	199 (7 13/16")

A = nominal length - 24 mm (15/16")
B = internal cabinet width - 75 mm (2 15/16")
C = rear panel height
D = internal cabinet width - 87 mm (3 7/16")
F = internal cabinet width - 31 mm (1 1/4")
E = Front panel height (see chart)

Drilling Pattern for Cabinet

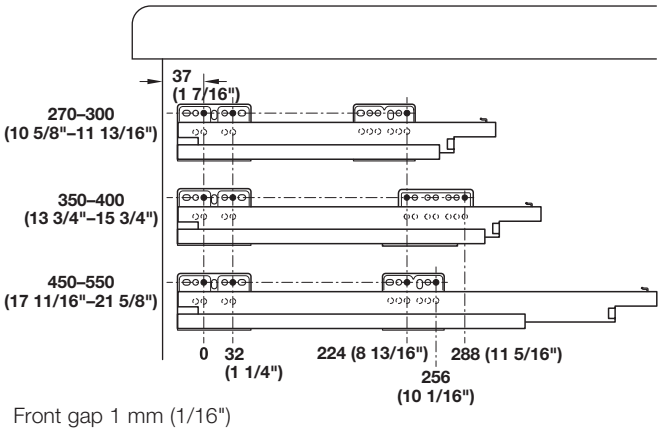

Front gap 1 mm (1/16")

Calculation of the internal drawer space dimensions

Internal drawer width, e.g.:	
External cabinet width	600 mm (23 5/8")
- (2 x side panel thickness)	- (2 x 19 mm (3/4") = 38 mm (1 1/2")
- B	- (B dimension) - 75 mm (2 15/16")
= internal drawer width	= 487 mm (19 3/16")

External cabinet width	**300 (11 13/16")**	**400 (15 3/4")**	**500 (19 11/16")**	**600 (23 5/8")**	**800 (31 1/2")**
Side panel thickness	Internal drawer width				
16 (5/8")	193 (7 5/8")	293 (11 9/16")	393 (15 1/2")	493 (19 7/16")	693 (27 5/16")
19 (3/4")	187 (7 3/8")	287 (11 5/16")	387 (15 1/4")	487 (19 3/16")	687 (27 1/16")

Internal drawer depth, e.g.:	
Nominal length cabinet runner	500 mm (19 11/16")
- installation dimension	- 8 mm (5/16")
- rear panel thickness	- 16 mm (5/8")
= internal drawer depth	= 476 mm (18 3/4")

Internal cabinet depth

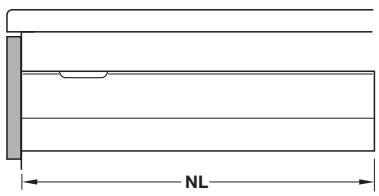

Min. internal cabinet depth = nominal length NL + 16 mm (5/8")

Dimensional data not binding. Dimensions in mm, inches are approximate. We reserve the right to alter specifications without notice.

Häfele Matrix Box S35

Adjustment facilities drawer side height 84 mm (3 5/16") and 120 mm (4 3/4")

Height and side adjustment from inside when installed

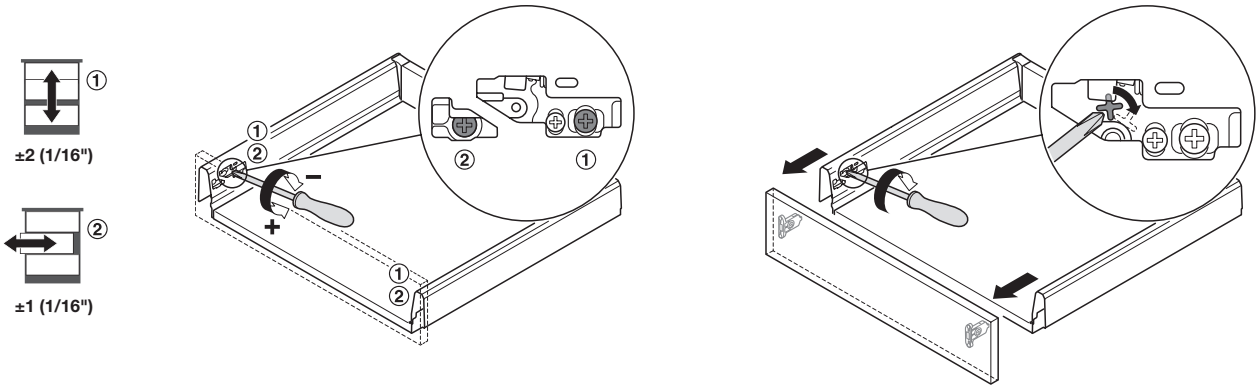

Installation and removal of the drawer

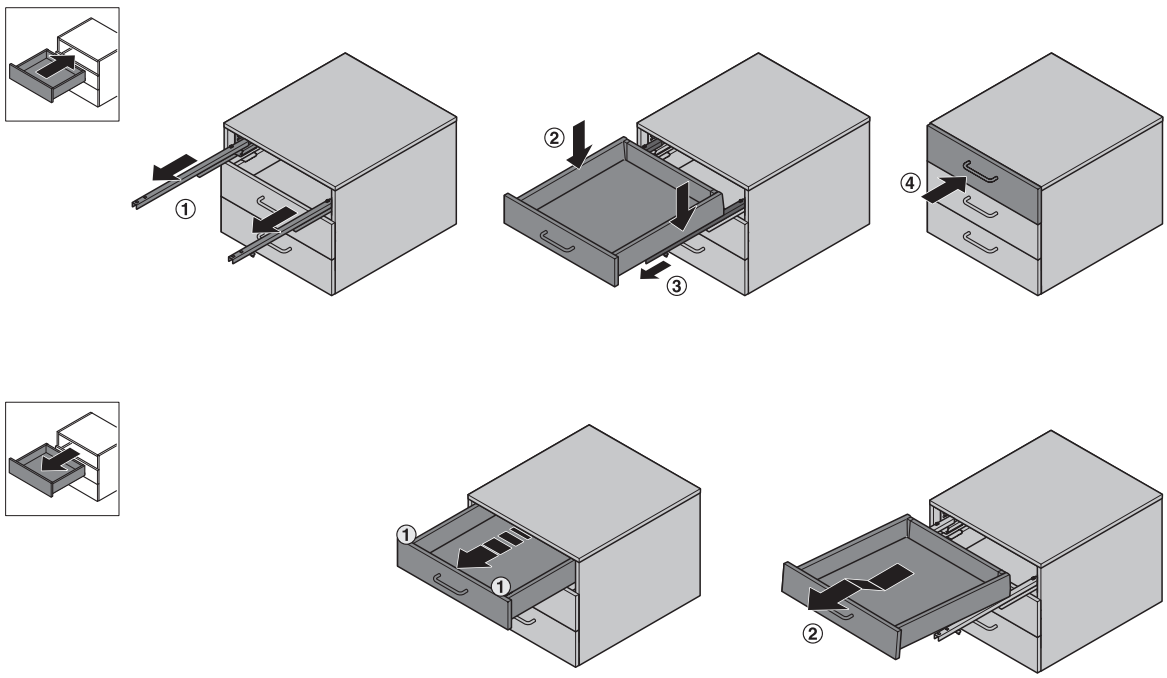

Dimensional data not binding. Dimensions in mm, inches are approximate. We reserve the right to alter specifications without notice.

Häfele Matrix Box S35

→ Drawer Set

- > Drawer side height: 84 mm (3 5/16")
- > Weight capacity: 35 kg (77 lbs.)
- > Full extension for maximum access to drawer
- > With integrated soft close
- > Material: Steel, powder-coated; Slides: Steel, galvanized

Length	white	gray	anthracite
270 (10 5/8")	552.03.730	552.03.630	552.03.430
300 (11 13/16")	552.03.731	552.03.631	552.03.431
350 (13 3/4")	552.03.732	552.03.632	552.03.432
400 (15 3/4")	552.03.733	552.03.633	552.03.433
450 (17 11/16")	552.03.734	552.03.634	552.03.434
500 (19 11/16")	552.03.735	552.03.635	552.03.435
550 (21 5/8")	552.03.736	552.03.636	552.03.436

Supplied With
Left/ right drawer sides with rear panel fitting
Left/right drawer slides
Left/right front fixing brackets with expanding dowels
Left/right rear panel fittings
Left/right cover caps

Internal installation height

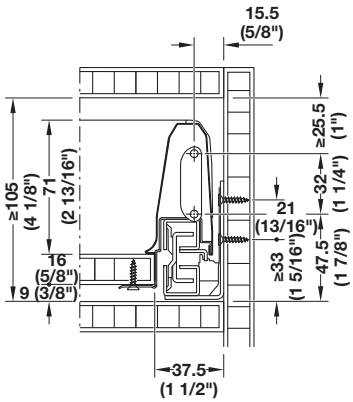

- > With square railing
- > Height: 84 mm (3 5/16") + square railing = 135 mm (5 5/16")
- > Finish: white

Length	Item No.
300 (11 13/16")	552.05.741
350 (13 3/4")	552.05.742
400 (15 3/4")	552.05.743
450 (17 11/16")	552.05.744
500 (19 11/16")	552.05.745
550 (21 5/8")	552.05.746

Supplied With
Left/ right drawer sides with rear panel fitting
Left/right drawer slides
Left/right front fixing brackets with expanding dowels
Left/right rear panel fittings
Left/right cover caps
Left/right square railings

Rear panel installation dimensions

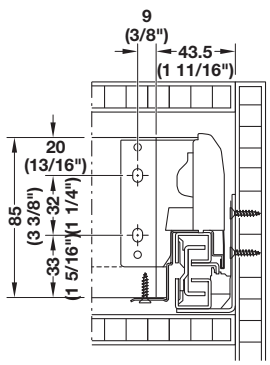

- > With square railing
- > Height: 84 mm (4 3/4") + 1 square railing = 199 mm (7 7/8")
- > Finish: white

Length	Item No.
300 (11 13/16")	552.07.741
350 (13 3/4")	552.07.742
400 (15 3/4")	552.07.743
450 (17 11/16")	552.07.744
500 (19 11/16")	552.07.745
550 (21 5/8")	552.07.746

Supplied With
Left/right double-walled drawer sides with rear panel fitting
Left/right drawer slides
Left/right front fixing brackets with expanding dowels
Left/right rear panel fittings
Left/right cover caps
Left/right square railings

Dimensional data not binding. Dimensions in mm, inches are approximate. We reserve the right to alter specifications without notice.

Häfele Matrix Box S35

→ Drawer Set

- > Drawer side height: 120 mm (4 3/4")
- > Weight capacity: 35 kg (77 lbs.)
- > Full extension for maximum access to drawer
- > With integrated soft close
- > Material: Steel; Finish: Drawer Sides: powder-coated; Slides: galvanized

Length	white	gray	anthracite
270 (10 5/8")	552.04.750	552.04.650	552.04.450
300 (11 13/16")	552.04.751	552.04.651	552.04.451
350 (13 3/4")	552.04.752	552.04.652	552.04.452
400 (15 3/4")	552.04.753	552.04.653	552.04.453
450 (17 11/16")	552.04.754	552.04.654	552.04.454
500 (19 11/16")	552.04.755	552.04.655	552.04.455
550 (21 5/8")	552.04.756	552.04.656	552.04.456

Supplied With
Left/right double-walled drawer sides with rear panel fitting
Left/right drawer slides
Left/right front fixing brackets with expanding dowels
Left/right rear panel fittings
Left/right cover caps

Internal installation height

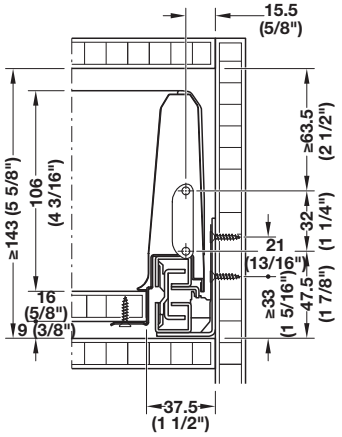

Rear panel installation dimensions

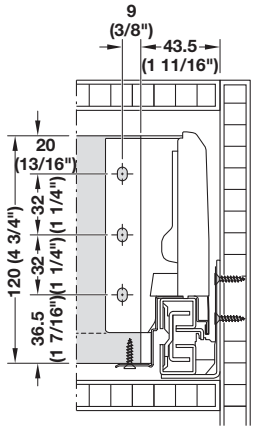

8

Drawer Slides

Dimensional data not binding. Dimensions in mm, inches are approximate. We reserve the right to alter specifications without notice.

Grass Vionaro

> A complete drawer system for modern cabinetry
> 90° straight corners and sides
> Slim 13 mm (1/2") side width
> Maximum drawer width: 1219 mm (48")
> Integrated height and side adjustment, tilt adjustment at back
> For face frame and frameless cabinets
> Optional 4D depth adjustment
> For use only with Dynapro 2D concealed undermount slides

→ Vionaro H89

Ⓒ

> Side height: 89 mm (3 1/2")
> Material: Steel

Drawer length	silver gray	graphite	white
381 (15")	550.41.539	550.41.339	550.41.739
457 (18")	550.41.546	550.41.346	550.41.746
533 (21")	550.41.554	550.41.354	550.41.753

→ Dynapro, required

Ⓓ

VARIANTA ⌀3 Pan Head #8

> Material: Steel; Finish: zinc-plated

Drawer length	Item No.
381 (15")	433.19.440
457 (18")	433.19.447
533 (21")	433.19.455

soft&silent

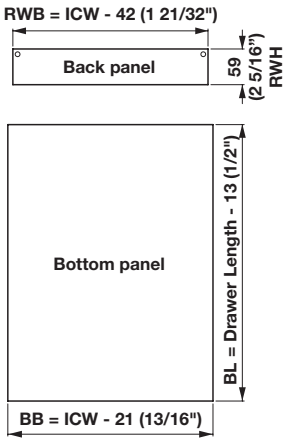

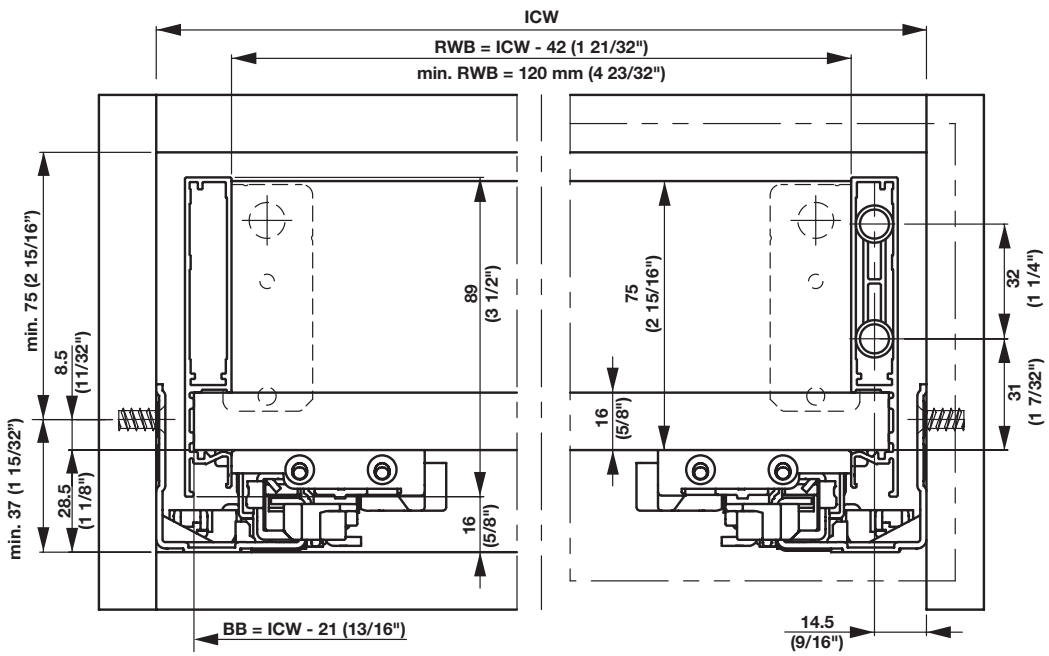

Accessories	page 8.31
Pan head screws	pages 12.9-12.10
Varianta screws	page 12.16

Dimensional data not binding. Dimensions in mm, inches are approximate. We reserve the right to alter specifications without notice.

Grass Vionaro

> A complete drawer system for modern cabinetry
> 90° straight corners and sides
> Side width: 13 mm (1/2")
> Drawer width: max.1219 mm (48")
> Integrated height and side adjustment, tilt adjustment at back
> For face frame and frameless cabinets
> Optional 4D depth adjustment
> For use only with Dynapro concealed undermount slides

→ Vionaro H121

Ⓒ

> Side height: 121 mm (4 3/4")
> Material: Steel, powder-coated

Drawer length	silver gray	graphite	white
381 (15")	550.42.539	550.42.339	550.42.739
457 (18")	550.42.546	550.42.346	550.42.746
533 (21")	550.42.554	550.42.354	550.42.754

→ Dynapro, required

Ⓓ

VARIANTA ⌀3

Pan Head #8

> Material: Steel; Finish: zinc-plated

Drawer length	Item No.
381 (15")	433.19.440
457 (18")	433.19.447
533 (21")	433.19.455

soft&silent

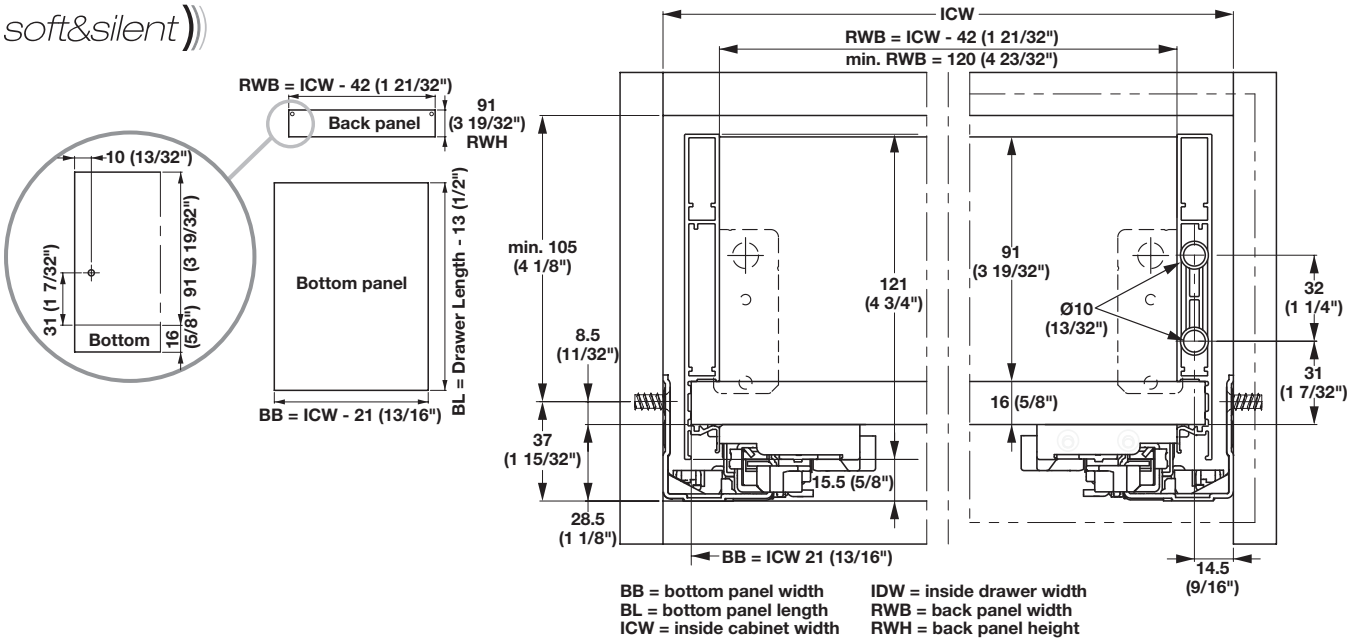

Pan head screws	pages 12.9-12.10
Varianta screws	page 12.16

Dimensional data not binding. Dimensions in mm, inches are approximate. We reserve the right to alter specifications without notice.

Grass Vionaro

→ Vionaro H185

Ⓒ

> Side height: 185 mm (7 1/4")
> Material: Steel

Drawer length	silver gray	graphite	white
381 (15")	550.43.539	550.43.339	550.43.739
457 (18")	550.43.546	550.43.346	550.43.746
533 (21")	550.43.554	550.43.354	550.43.753

Note Vionaro only works with Dynapro 16 2-D.

→ Dynapro, required

Ⓓ

VARIANTA ⌀3

Pan Head #8

> Material: Steel; Finish: zinc-plated

Drawer length	Item No.
381 (15")	433.19.440
457 (18")	433.19.447
533 (21")	433.19.455

soft&silent

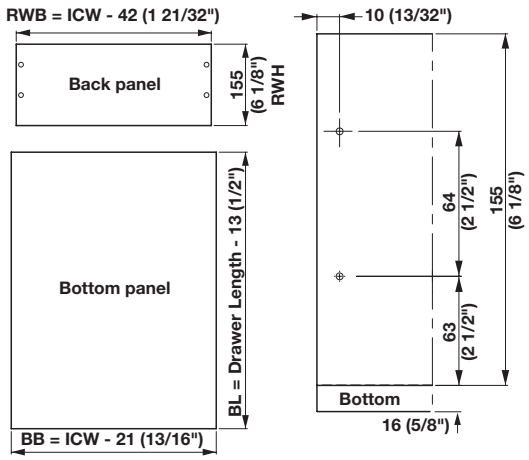

BB = bottom panel width
BL = bottom panel length
IDW = inside drawer width

ICW = inside cabinet width
RWB = back panel width
RWH = back panel height

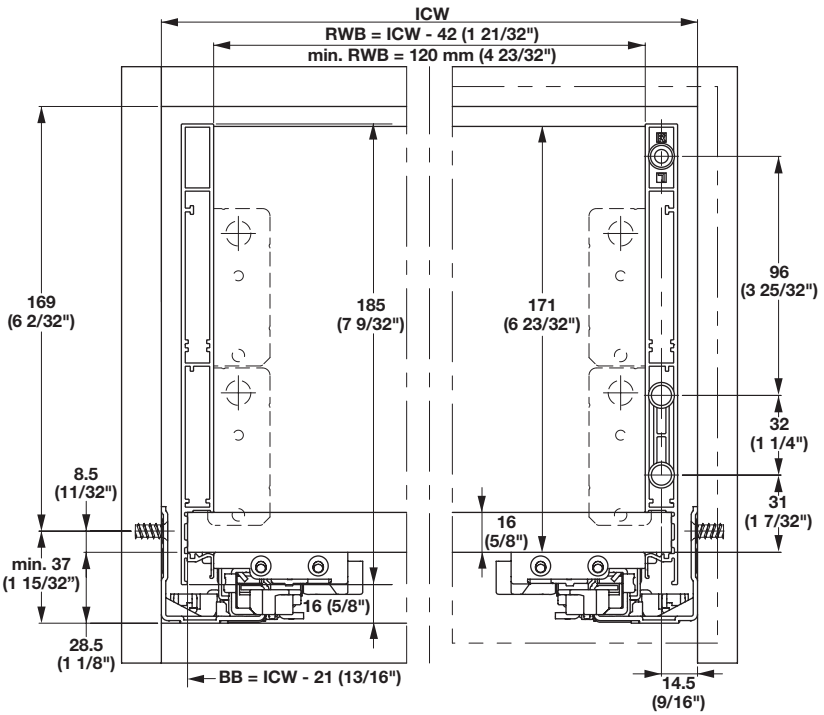

Accessories	page 8.31
Pan head screws	pages 12.9-12.10
Varianta screws	page 12.16

Dimensional data not binding. Dimensions in mm, inches are approximate. We reserve the right to alter specifications without notice.

Grass Vionaro

> Drawer side height: 120 mm (4 3/4")
> Weight capacity: 35 kg (77 lbs.)
> Full extension for maximum access to drawer
> With integrated soft close
> Material: Steel; Finish: Drawer Sides: powder-coated; Slides: galvanized

soft&silent

→ Vionaro H249

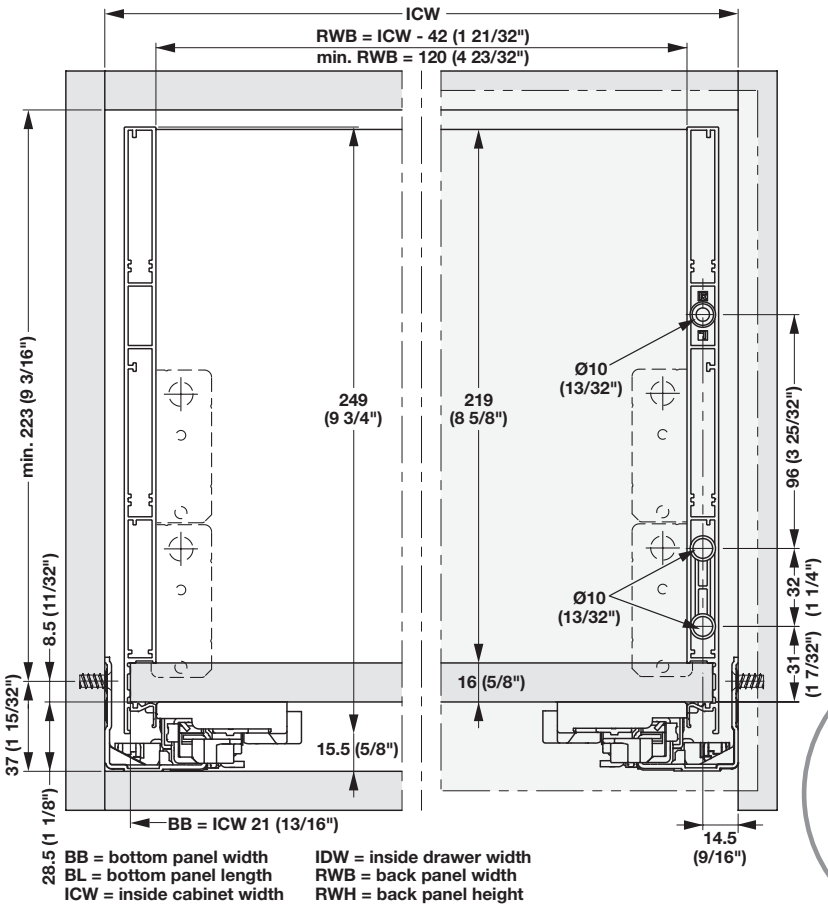

Ⓒ

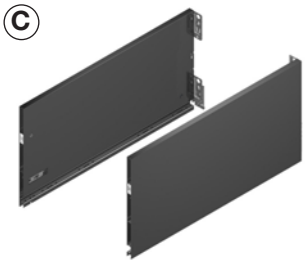

> Side height: 249 mm (9 3/4")
> Material: Steel, powder-coated

Drawer length	silver gray	graphite	white
381 (15")	550.44.539	550.44.339	550.44.739
457 (18")	550.44.546	550.44.346	550.44.746
533 (21")	550.44.554	550.44.354	550.44.754

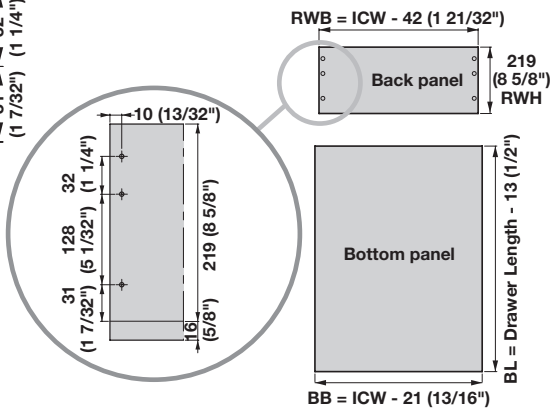

→ Dynapro, required

Ⓓ

VARIANTA ⌀3 | Pan Head #8

> Material: Steel; Finish: zinc-plated

Drawer length	Item No.
381 (15")	433.19.440
457 (18")	433.19.447
533 (21")	433.19.455

Accessories	page 8.31
Pan head screws	pages 12.9-12.10
Varianta screws	page 12.16

Dimensional data not binding. Dimensions in mm, inches are approximate. We reserve the right to alter specifications without notice.

Grass Vionaro Accessories

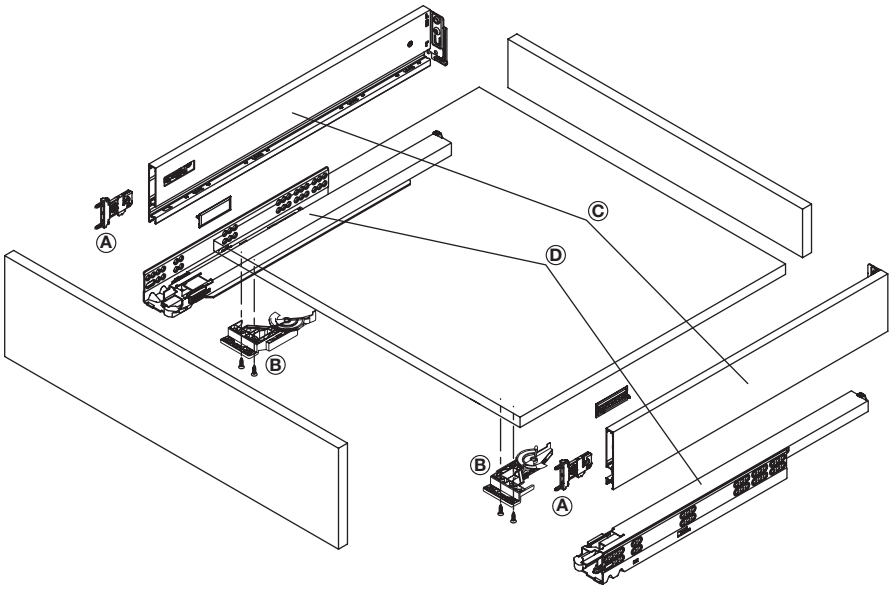

→ Locking Devices with Flange

Ⓑ

> Material: Plastic; Finish: silver gray

Version	Item No.
Left handed	433.19.008
Right handed	433.19.007
Pair (L/R)	433.19.025

→ Adapter Set for H185 and H249

Ⓐ

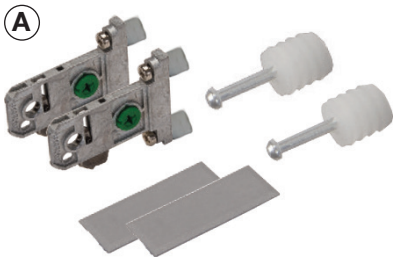

> Material: Plastic

Finish	Item No.
silver gray	550.47.552
graphite	550.47.352
white	550.47.755

→ Adapter Set for H89 and H121

Ⓐ

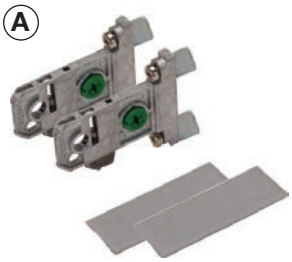

> Material: Plastic

Finish	Item No.
silver gray	550.47.550
graphite	550.47.350
white	550.47.750

→ Marking Jig

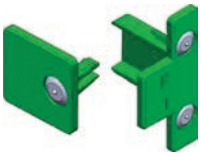

> For exact marking of the drilled holes for the drawer fronts
> Material: Plastic

Color	Item No.
green	550.47.931

Supplied With
2 pcs.

Dimensional data not binding. Dimensions in mm, inches are approximate. We reserve the right to alter specifications without notice.

Grass Vionaro Accessories

> Color coordinated front panel profile
> Cubist design with 90° angles
> Slimline 13 mm (1/2") side width
> Bottom panel is cut to size without notching

→ Front Panels

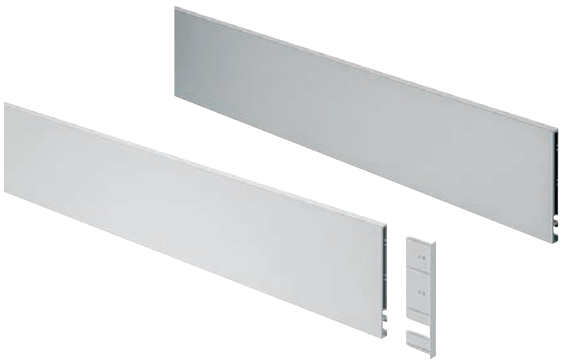

> Allows Vionaro drawers to be used in an internal drawer application
> Length: 1160 mm (45 11/16")
> Thickness: 7.5 mm (5/16")
> Material: Aluminum/Plastic

For drawer heights	Panel height	Finish	Item No.
89 (3 1/2")	104 (4 3/32")	graphite	550.46.320
		silver	550.46.520
		white	550.46.720
185 (7 1/4")	200 (7 7/8")	graphite	550.46.330
		silver	550.46.530
		white	550.46.730

Note
Cut dimension is determined by ICW - 8 mm (5/16").

→ Front Panel Accessory Kit

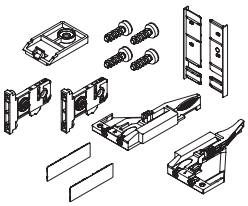

> Required for 89 mm (3 1/2") door height

Finish	Item No.
silver gray	550.47.560
graphite	550.47.360
white	550.47.760

Supplied With
2 Cover caps
Front locking device set, left/right
2 Front connectors
4 Front connector screws
Front bottom connector
2 End caps

→ Front Panel Accessory Kit

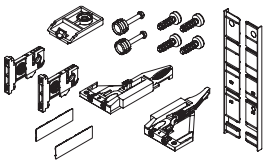

> Required for 185 mm (7 1/4") door height

Finish	Item No.
silver gray	550.47.561
graphite	550.47.361
white	550.47.761

Supplied With
2 Cover caps
Front locking device set, left/right
2 Front connectors
4 Front connector screws
Front bottom connector
2 End caps
2 Front stabilizers with 8 mm dowel

Push-to-Open page 8.75

Dimensional data not binding. Dimensions in mm, inches are approximate. We reserve the right to alter specifications without notice.

Grass Vionaro Accessories

> For all Vionaro drawers
> Simple installation by mounting on the drawer side
> Can be retrofitted at any time
> Tool-free adjustment

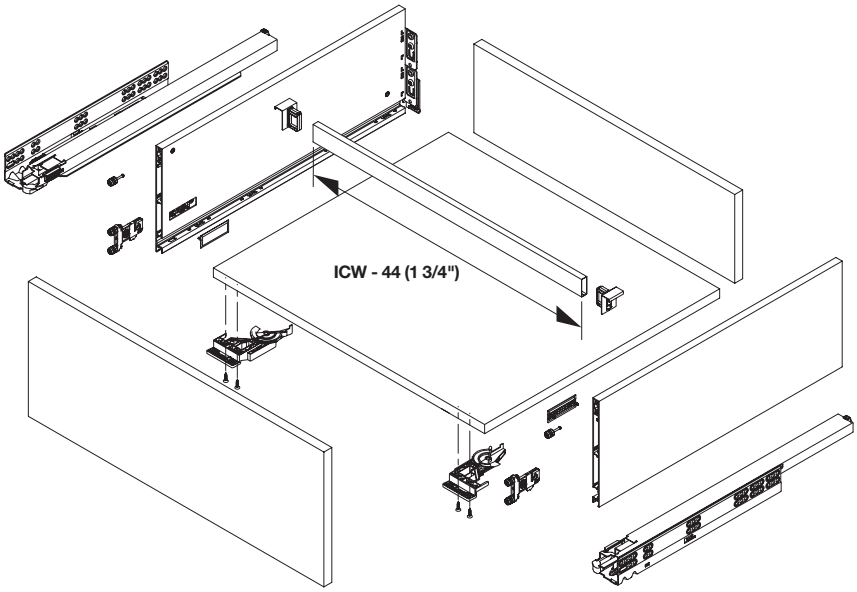

→ Cross Divider Rail

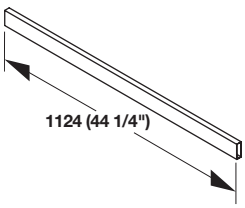

> Cut to desired length

Finish	Item No.
silver gray	550.46.579
graphite	550.46.379
white	550.46.779

Note
Cut dimension is determined by ICW - 44 mm (1 3/4").

→ Holder

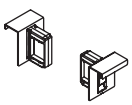

> For cross divider rail

Finish	Item No.
silver gray	550.46.580
graphite	550.46.380
white	550.46.780

Dimensional data not binding. Dimensions in mm, inches are approximate. We reserve the right to alter specifications without notice.

Grass Nova Pro Scala

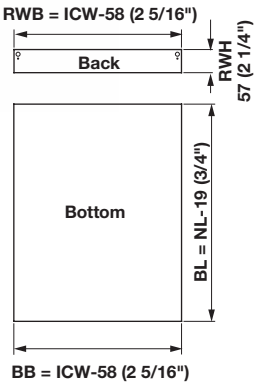

Note: Cutting dimensions for back and bottom based on 16mm material

> Elegant continuous design formed from a single piece of high quality steel
> Synchronized full extension drawer slide
> Smooth soft closing with state-of-the-art technology
> Integrated height and side adjustment
> Drawer front can be installed or removed without tools
> Works with Tipmatic soft close and Sensomatic touch-to-open systems
> Bottom and back panel width are the same
> 2 and 3 dimensional adjustments
> Vertical interior walls for optimum use of interior space
> Drawer side heights of 63, 90, 186 and 250 mm (2 1/2", 3 1/2", 7 5/16", 9 13/16")
> Weight capacities: 40 kg (88 lbs.) and 70 kg (154 lbs.) dynamic

Note
See required slides on page **8.36**.

→ H63 Series

> Extremely shallow drawer for limited heights
> Side height: 63 mm (2 1/2")

Length	stone	ice	silver
400 (16")	551.81.540	551.81.740	551.81.940
450 (18")	551.81.545	551.81.745	551.81.945
500 (20")	551.81.550	551.81.750	551.81.950
550 (22")	551.81.555	551.81.755	551.81.955

→ Front Brackets

Version	Item No.
Screw mount	551.90.900
Dowel, 10 mm (3/8")	551.90.904

Note
2 brackets are required per drawer.

→ H90 Series

> Standard height for all applications
> Side height: 90 mm (3 1/2")

Length	stone	ice	silver
300 (12")	551.82.530	551.82.730	551.82.930
350 (14")	551.82.535	551.82.735	551.82.935
400 (16")	551.82.540	551.82.740	551.82.940
450 (18")	551.82.545	551.82.745	551.82.945
500 (20")	551.82.550	551.82.750	551.82.950
550 (22")	551.82.555	551.82.755	551.82.955

→ Front Brackets

Mounting	Item No.
Screw mount	551.90.901
Dowel, 10 mm (3/8")	557.99.911

Note
2 brackets are required per drawer.

Required slides page 8.36

Dimensional data not binding. Dimensions in mm, inches are approximate. We reserve the right to alter specifications without notice.

Grass Nova Pro Scala

Note
See required slides on next page.

→ H186 Series

> Slim, deep drawer side
> Side height: 186 mm (7 5/16")

Length	stone	ice	silver
300 (12")	551.84.530	551.84.730	551.84.930
350 (14")	551.84.535	551.84.735	551.84.935
400 (16")	551.84.540	551.84.740	551.84.940
450 (18")	551.84.545	551.84.745	551.84.945
500 (20")	551.84.550	551.84.750	551.84.950
550 (22")	551.84.555	551.84.755	551.84.955

→ H250 Series

> Slim, deep drawer side
> Side height: 250 mm (9 13/16")

Length	stone	ice	silver
400 (16")	558.81.563	558.81.763	558.81.963
450 (18")	558.81.564	558.81.764	558.81.964
500 (20")	558.81.565	558.81.765	558.81.965
550 (22")	558.81.566	558.81.766	558.81.966

→ Front Installation Brackets

> For use with H186 and H250 series

Mounting	Item No.
Screw	551.90.901
Dowel, 10 mm (3/8")	557.99.911

Note
2 brackets are required per drawer.

→ Front Fixing Brackets

> For use with H186 and H250 series

Mounting	Item No.
Screw	551.90.932
Dowel, 10 mm (3/8")	551.90.952

Note
2 clips are required per drawer.

→ Front Stabilizer Button

> Required for H250 height

	Item No.
	551.90.659

Note
2 pcs. are required per drawer.

Required slides page 8.36

Dimensional data not binding. Dimensions in mm, inches are approximate. We reserve the right to alter specifications without notice.

Grass Nova Pro Scala

> Full extension for maximum access to drawer contents
> Weight capacities: 40 or 70 kg (88 or 154 lbs.)
> Fully synchronized slide technology
> Soft close damping system
> Material: Steel

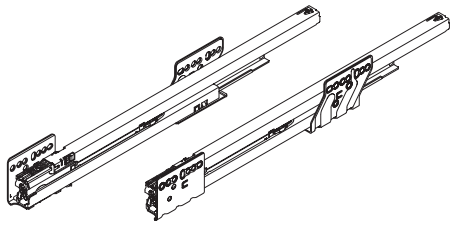

Drawer Installation Dimensions

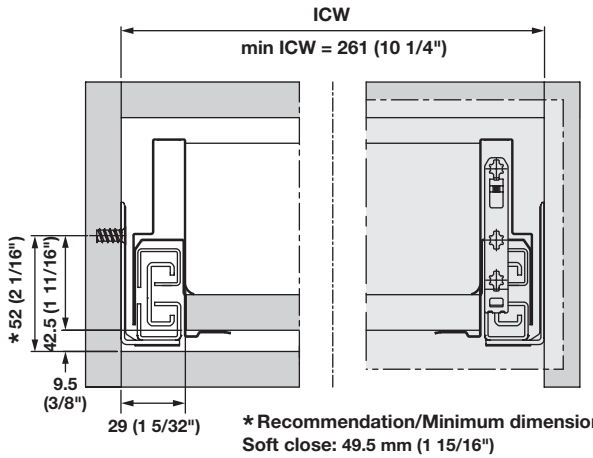

*Recommendation/Minimum dimension:
Soft close: 49.5 mm (1 15/16")

Cabinet Boring Specifications

BB = bottom panel width
BL = bottom panel length
ICW = inside cabinet width
IDW = inside drawer width
NL = nominal length
RWB = back panel width
RWH = back panel height

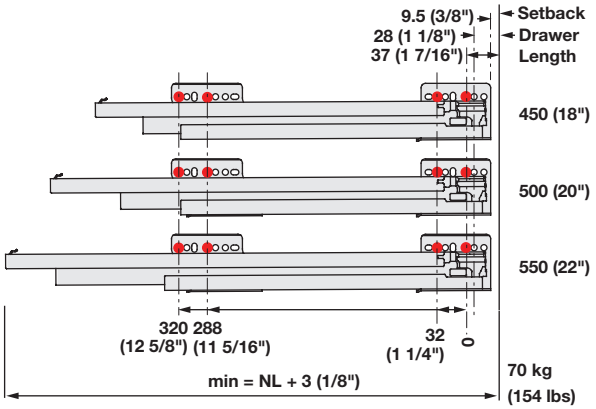

→ Cabinet Members

> Drawer slide for heavy duty applications
> Weight capacity: 70 kg (154 lbs.)

Length	Item No.
450 (18")	551.80.747
500 (20")	551.80.752
550 (22")	551.80.757

> Standard drawer slide for all applications
> Weight capacity: 40 kg (88 lbs.)

Length	Item No.
300 (12")	551.80.932
350 (14")	551.80.937
400 (16")	551.80.942
450 (18")	551.80.947
500 (20")	551.80.952
550 (22")	551.80.957

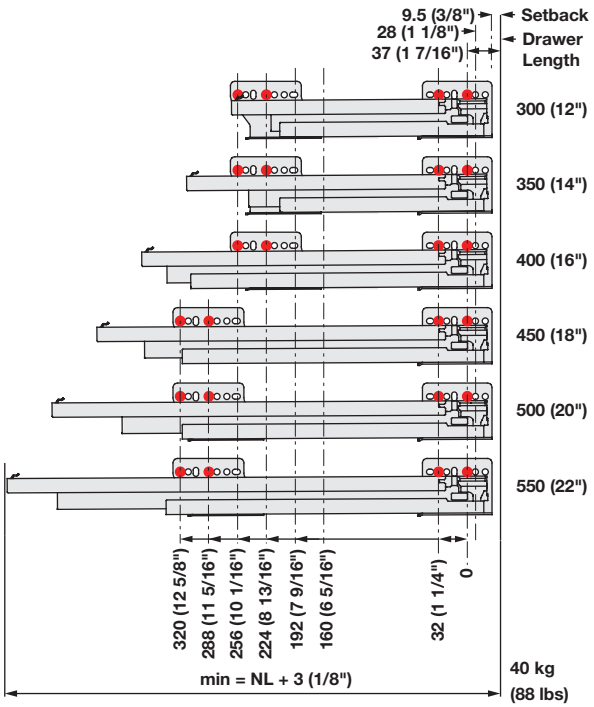

Dimensional data not binding. Dimensions in mm, inches are approximate. We reserve the right to alter specifications without notice.

Grass Nova Pro Scala

→ Tipmatic

> Mechanical opening system for handle-free fronts
> Combines Tipmatic function with soft close damping
> Tool-free assembly
> One unit for all Nova Pro Scala lengths and weights
> 3 tier adjustment for the opening force
> Wide activation zone due to synchronization bar

	Item No.
	551.80.000

Supplied With
Unit
Activator

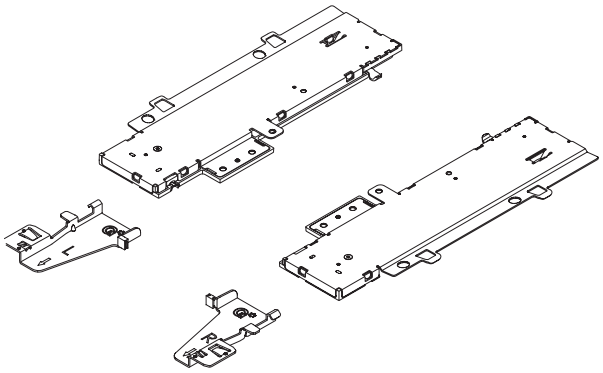

Minimum Front Gap

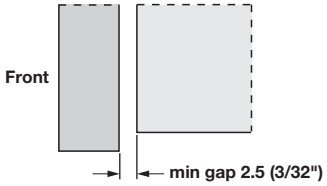

→ Synchronization Bar

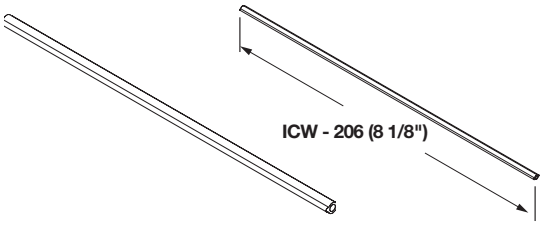

> Material: Aluminum

Length	Item No.
600 (23 5/8")	551.90.160
1200 (47 1/4") or 962 (37 7/8")	551.90.161

→ Synchronization Bar Support

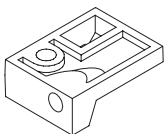

> Screw mounted
> Material: Plastic

	Item No.
	551.80.005

Dimensional data not binding. Dimensions in mm, inches are approximate. We reserve the right to alter specifications without notice.

Grass Nova Pro Scala

→ Rectangular Railing Set

- > Snug-fitting rectangular railing
- > Flush-fitting back panel adapter
- > Easy installation
- > Easy tilt adjustment

Length	stone	ice	silver
300 (12")	551.88.501	551.88.701	551.88.901
350 (14")	551.88.502	551.88.702	551.88.902
400 (16")	551.88.503	551.88.703	551.88.903
450 (18")	551.88.504	551.88.704	551.88.904
500 (20")	551.88.505	551.88.705	551.88.905
550 (22")	551.88.506	551.88.706	551.88.906

Supplied With
2 Railings
2 Cover caps
Front Railing bracket left & right
Back Railing bracket left & right

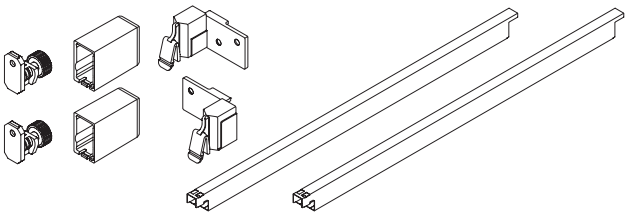

Drawer Installation Dimensions

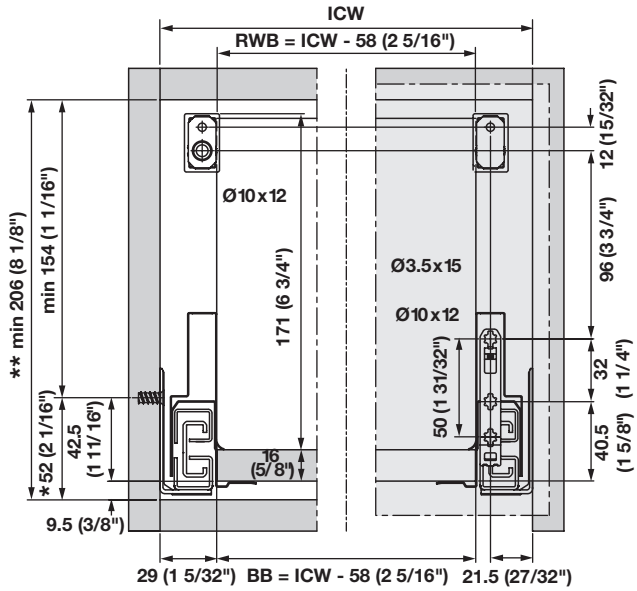

****Recommendation/Minimum dimension:**
Soft close: 203.5 mm (8")
Tipmatic Soft close: 212 mm (8 3/8")

***Recommendation/Minimum dimension:**
Soft close: 49.5 mm (1 15/16")
Tipmatic Soft-close: 58 mm (2 5/16")

Dimensional data not binding. Dimensions in mm, inches are approximate. We reserve the right to alter specifications without notice.

Grass Nova Pro Scala

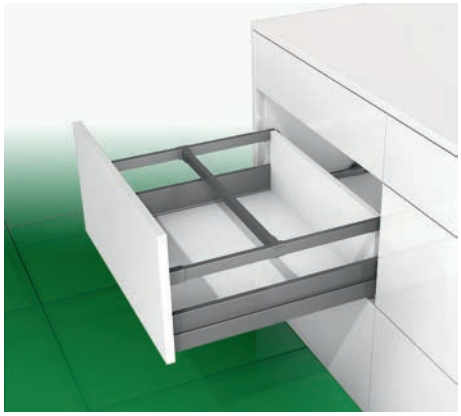

→ Divider Railing

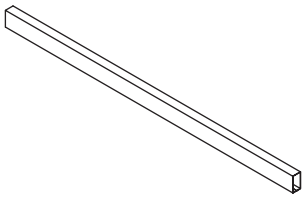

> Can be cut to desired length
> Length: 1150 mm (45 1/2")
> Material: Plastic

stone	ice	silver
551.89.569	551.89.769	551.89.969

→ Divider Railing Clip for Railing

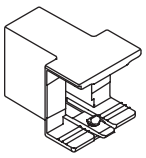

> For use with railing as side attachment
> Material: Plastic

stone	ice	silver
551.89.599	551.89.799	551.89.999

→ Divider Railing Clip for Drawer Side

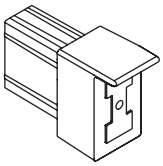

> For use without railing or directly onto drawer member
> Material: Plastic

stone	ice	silver
551.89.597	551.89.797	551.89.997

→ Cross Divider for Railing

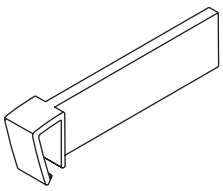

> Material: Plastic

stone	ice	silver
551.89.596	551.89.796	551.89.996

Cutting dimensions for divider railing on rectangular railing

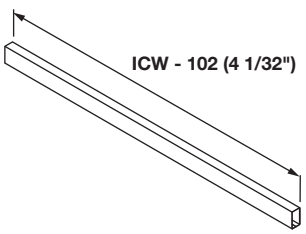

Cutting dimensions for divider railing on drawer side

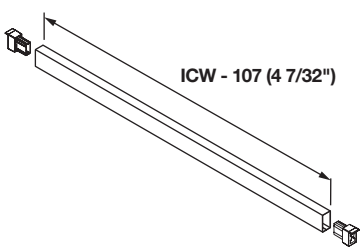

Dimensional data not binding. Dimensions in mm, inches are approximate. We reserve the right to alter specifications without notice.

Grass Nova Pro Scala

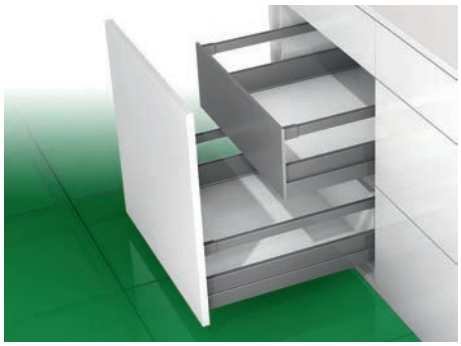

→ Inset Drawer System

> Color-coordinated aluminum front panel profile
> 90 mm (3 1/2") and 186 mm (7 5/16") side heights

→ Inset Panel H90

> Length: 1160 mm (45 11/16")
> Material: Aluminum

stone	ice	silver
551.89.509	551.89.709	551.89.909

Note Panel width = bottom width + 50 mm (1 15/16")

→ Inset Panel with Railing, H90 or H186

> Length: 1160 mm (45 11/16")
> Material: Aluminum

stone	ice	silver
551.89.519	551.89.719	551.89.919

Note Panel width = bottom width + 50 mm (1 15/16")

Cut to length

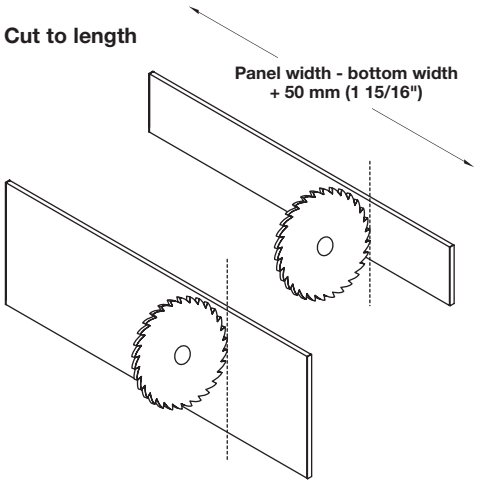

→ Accessory Sets

Version	stone	ice	silver
Inset Panel H90	551.89.590	551.89.790	551.89.990
Inset Panel H90 with railing	551.89.592	551.89.792	551.89.992
Inset Panel H186	551.89.591	551.89.791	551.89.991

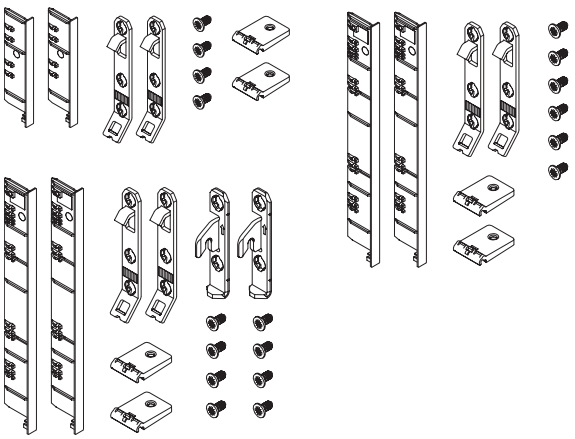

H90 Accessory Set supplied with
2 Cover caps
2 Installation hooks
4 Special screws
2 Front-bottom connectors

H186/H90 with Railing Accessory Set supplied with
2 Cover caps
2 Installation hooks
6 Special screws
2 Front-bottom connectors

H186 Set supplied with
2 Cover caps
2 Installation hooks
2 Front clips
8 Special screws
2 Front-bottom connectors

BB = bottom panel width
IPW = inset panel width

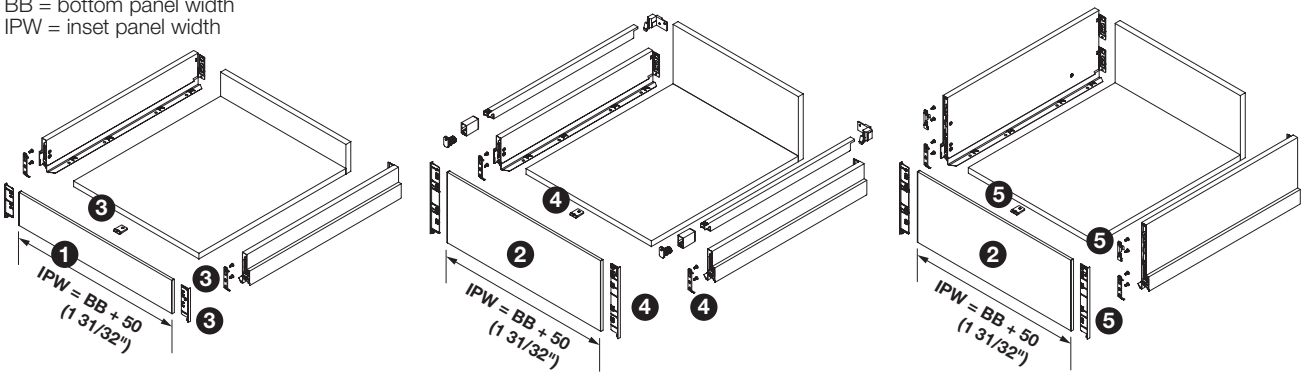

Dimensional data not binding. Dimensions in mm, inches are approximate. We reserve the right to alter specifications without notice.

Grass Nova Pro Scala

→ Marking Jig Set

> For exact marking of the drill holes for the front brackets

Version	Item No.
H63	558.18.072
H90	558.18.071
H186/H250	558.18.075

→ Insertion Die

> For dowelled front brackets
> Works with Grass Pro 1 and Ecopress machines

	Item No.
	001.97.272

Note
Grass machine program available, please inquire for details.

→ Punch-In Tool

> For positioning and installing the front brackets

Version	Item No.
H63	558.18.080
H90/H186	001.35.100

> For positioning and installing the front clip

	Item No.
	558.18.090

> For positioning and installing the front-bottom connector

	Item No.
	558.18.092

Dimensional data not binding. Dimensions in mm, inches are approximate. We reserve the right to alter specifications without notice.

Salice Lineabox

> Metal drawer system with clean, simple lines and minimal wall thickness to maximize internal space
> For use with Salice Futura and F70 undermount drawer slides (Soft close or Push), see pages 8.56, 8.60 and 8.62A–8.62B
> Rapid assembly with clip connectors eliminates the need for machines or templates
> Sides are notched front and back for a completely finished appearance without the need for "short-edge" edgebanding
> 16 mm (5/8") bottom, back and sub-front material
> Non handed
> Lifetime warranty
> Material: Aluminum

→ Drawer Side Height: 75 mm (3")

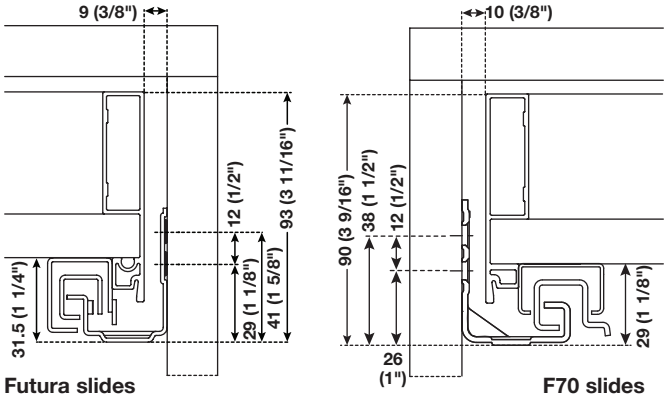

Futura slides **F70 slides**

Length	white	gray	stainless steel look
229 (9")	555.83.700	555.83.500	555.83.000
305 (12")	555.83.701	555.83.501	555.83.001
381 (15")	555.83.702	555.83.502	555.83.002
457 (18")	555.83.703	555.83.503	555.83.003
533 (21")	555.83.704	555.83.504	555.83.004

Note
Requires 4 front/back fixing clips.

Supplied With
12 pcs./box - members are non-handed

→ Drawer Side Height: 101 mm (4")

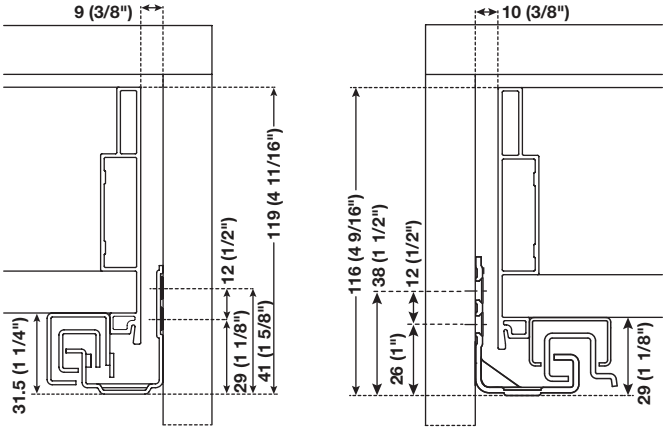

Futura slides **F70 slides**

Length	white	gray	stainless steel look
229 (9")	555.83.710	555.83.510	555.83.010
305 (12")	555.83.711	555.83.511	555.83.011
381 (15")	555.83.712	555.83.512	555.83.012
457 (18")	555.83.713	555.83.513	555.83.013
533 (21")	555.83.714	555.83.514	555.83.014

Note
Requires 4 front/back fixing clips.

Supplied With
12 pcs./box - members are non-handed

Cutting the length and width for the bottom

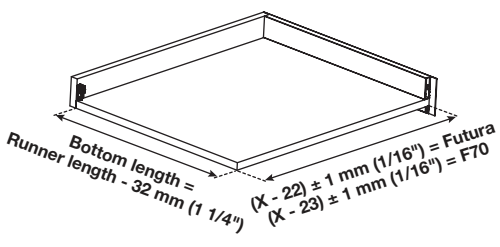

OUTSIDE BACK

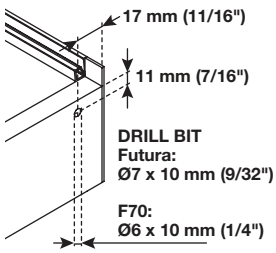

Futura soft close slides	page 8.56
Futura push slides	page 8.60
F70 slides	pages 8.62A–8.62B

Dimensional data not binding. Dimensions in mm, inches are approximate. We reserve the right to alter specifications without notice.

Salice Lineabox

→ Drawer Side Height: 178 mm (7")

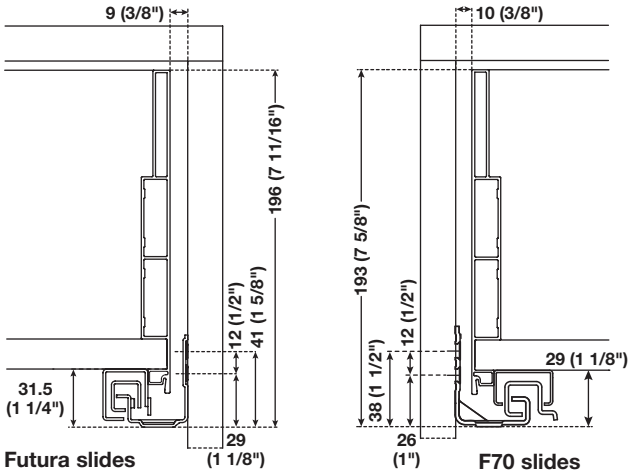

Length	white	gray	stainless steel look
229 (9")	555.83.720	555.83.520	555.83.020
305 (12")	555.83.721	555.83.521	555.83.021
381 (15")	555.83.722	555.83.522	555.83.022
457 (18")	555.83.723	555.83.523	555.83.023
533 (21")	555.83.724	555.83.524	555.83.024

Note Requires 8 front/back fixing clips.

Supplied With 12 pcs./box - members are non-handed

→ Drawer Side Height: 237 mm (9 5/16")

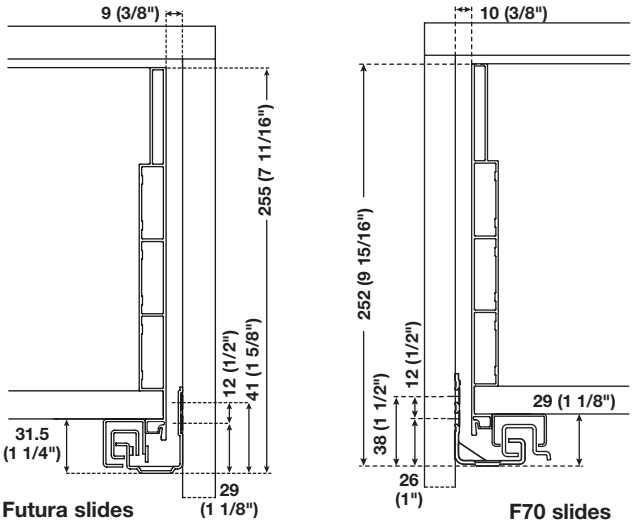

Length	white	gray	stainless steel look
229 (9")	555.83.730	555.83.530	555.83.030
305 (12")	555.83.731	555.83.531	555.83.031
381 (15")	555.83.732	555.83.532	555.83.032
457 (18")	555.83.733	555.83.533	555.83.033
533 (21")	555.83.734	555.83.534	555.83.034

Note Requires 12 front/back fixing clips.

Supplied With 12 pcs./box - members are non-handed

→ Front/Back Fixing Clips

Mounting	Item No.
Dowel (5 mm)	555.82.313
Screw (2x Ø3.5 mm x 20 mm) (supplied)	555.82.310

Rapid assembly of non-handed sides

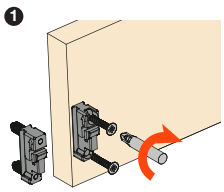

❶ Attach external connectors with 5 mm (3/16") dowels or pozi drive wood screws

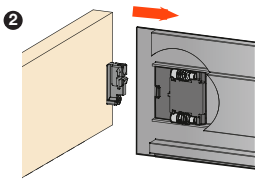

❷ Push to engage external and internal connectors

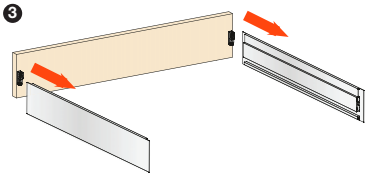

❸ Attach back with snap-in connectors

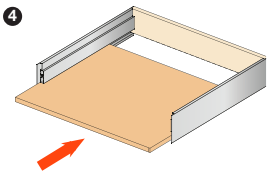

❹ Insert 16 mm (5/8") bottom

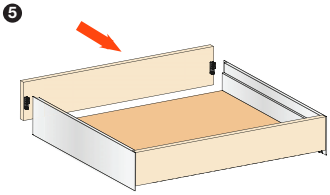

❺ Attach sub-front with snap-in connectors

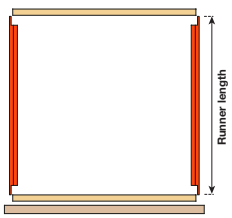

Unique double notch profile, front and back, results in a fully finished product and eliminates the need for "short-edge" edgebanding

Futura soft close slides	page 8.56
Futura push slides	page 8.60
F70 slides	pages 8.62A–8.62B

Dimensional data not binding. Dimensions in mm, inches are approximate. We reserve the right to alter specifications without notice.

Grass Zargen and Z Box Drawer Systems

Maximum design versatility.
For years the Zargen and Z Box metal drawer systems have provided cabinet makers the quality and functionality expected of Grass hardware along with the flexibility to design your own drawer space. The versatile metal drawer system offers deep drawers and standard drawers, pull-out shelves, inset drawers and railing systems. Zargen and Z Box offers endless possibilities for the end user.

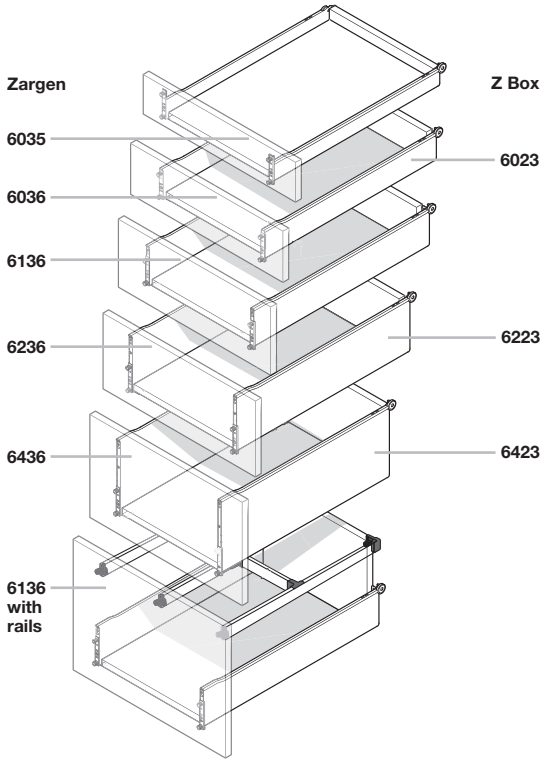

Flexibility to the most demanding design needs.
From residential and office furniture to commercial and institutional settings, the versatile and reliable Zargen and Z Box systems deliver the superior performance one expects from a premium slide. Built-in positive stops act as a shock absorber protecting the drawer front from excessive impact during closing. A self-closing action, with a 60 mm slope allows the drawer to close with just a gentle push. Side and height adjustments allow for perfect alignment.

Endless possibilities
A well-organized storage system creates efficiency. The Zargen and Z Box slide systems are designed with completely interchangeable components. From cabinet members to high sides to railing systems, the drawer system provides the flexibility to please the most demanding design needs for any application.

2-Minute drawer
Assemble your Zargen or Z Box drawer in two minutes or less with the Grass Ecopress machine and the Grass Assembly Ram. All you need is a pair of slides, the drawer front, drawer back and drawer bottom. The Ecopress drills the holes for the fronts and backs while the Assembly Ram presses the slides into the parts. A fast economical way to build drawers in 2 minutes or less.

Dimensional data not binding. Dimensions in mm, inches are approximate. We reserve the right to alter specifications without notice.

Grass Zargen and Z Box Drawer Systems - Technical Information

Adjustment Features for Zargen 6423, 6436, 6236, 6223, 6136

❶ Height Adjustment:
Loosen screws 2 slightly.
Adjust screw 1 (adjustment +/-2 mm). Tighten screws 2.

❷ Side Adjustment:
Loosen screws 2 slightly.
Adjust front to required position (adjustment range ± 1.5 mm).
Tighten screws 2.

After adjusting front panel, mount fixing screw.

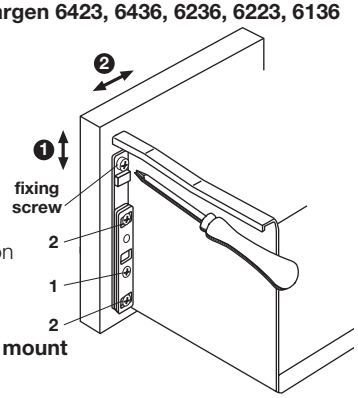

Adjustment Features for Z Box 6023, 6036, 6035

❶ Height Adjustment:
Loosen screws 2 slightly.
Adjust screw 1 (adjustment +/-2 mm). Tighten screws 2.

❷ Side Adjustment:
Loosen screws 2 slightly.
Adjust front to required position (adjustment range ± 1.5 mm).
Tighten screws 2.

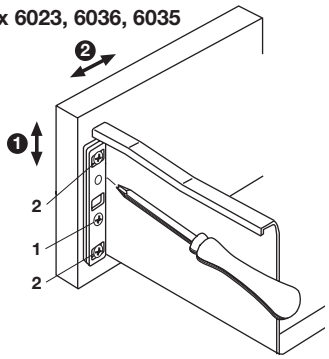

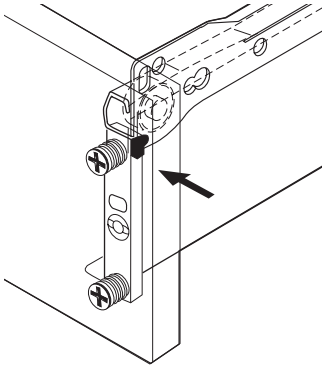

Built-in Stop
The integrated drawer stop protects the drawer front from impact during closing. Furthermore, it acts as a shock absorber and a self-alignment feature for the drawer fronts. (no additional bumpers needed)

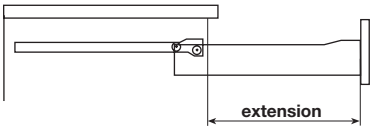

Weight Capacity
The nominal weight capacity depends on the slide extension and is listed on each page. Static weight capacity refers to the short-term overload of the slide when not in motion. This short-term overload factor also depends on the slide extension. These weights meet or exceed ANSI/KCMA and ANSI/BHMA requirements.

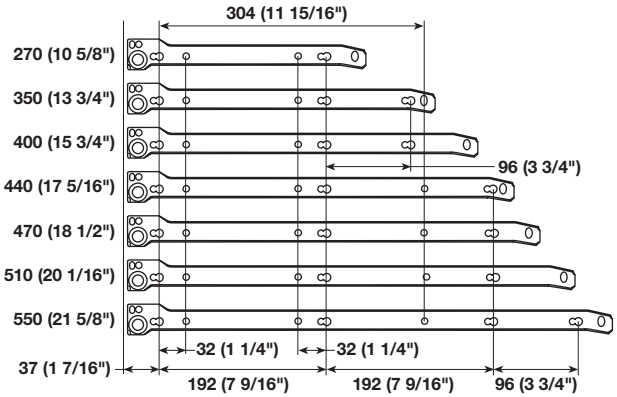

Cabinet Member
To simplify installation of the cabinet member, a unique double-hole pattern for 32 mm and 37 mm setback has been developed.

Installation with Wood Screws
With wood screws (#6 x 5/8" flat head phillips) the cabinet member is screwed directly on the end panel. To guarantee precise positioning, pre-center with a pilot drill. For wood screws, use the front section of the double hole.

Installation with Euro Screws
With Euro screws (flat head phillips) the cabinet member can be fastened into a pre-drilled 32 mm hole system. See drawing to the left for all fastening positions.

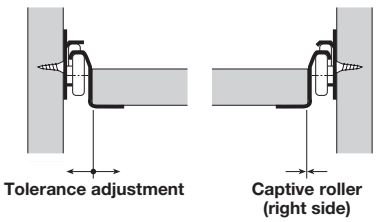

Captive Rollers
To avoid tolerance problems, Grass slides are designed to eliminate side movement of the drawer. After installation, the right drawer member blends perfectly with the right cabinet member for guidance; the left side allows for cutting tolerance of the drawer and the cabinet components.

System Organization
The Zargen and Z Box systems solve all organizational requirements with regular drawers, inset pull-outs, divider railings and more.

Dimensional data not binding. Dimensions in mm, inches are approximate. We reserve the right to alter specifications without notice.

Grass Zargen

> Weight capacity: 45 kg (100 lbs.)
> Self-closing feature with 60 mm (2 3/8") closing range
> Quick assembly through dowelled and integrated front fixing brackets
> Tolerance adjustment: 2 mm (3/32")
> Adjustments: Height (± 2 mm); Side (± 1.5 mm)
> Drawer slide attachment: Wood screws #6 x 5/8 FHP
Euro screw for 5 mm system holes
> Bottom panel thickness: 12.7–19 mm (1/2"–3/4")
> Back panel thickness: 16–19 mm (5/8"–3/4")
> Bottom panel length = slide length - panel thickness - 3 mm (1/8")
> Bottom panel width = ICW - 31 mm (1 1/4")
> Made in the USA

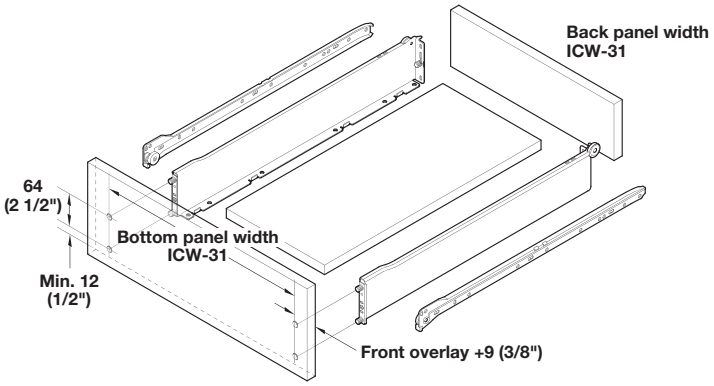

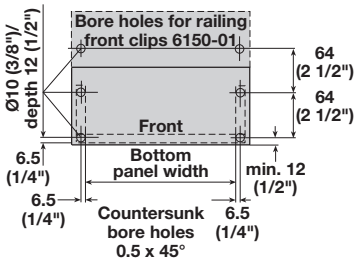

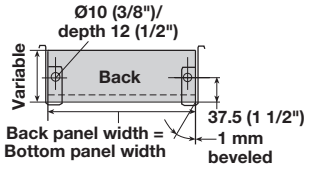

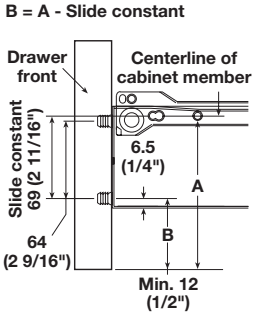

Slide length	Bottom panel length		Drawer extension	
	16 (5/8") back panel	19 (3/4") back panel	Single stop	Double stop
270 (10 5/8")	251 (9 7/8")	248 (9 3/4")	200 (7 7/8")	-
350 (13 3/4")	331 (13 1/16")	328 (12 15/16")	280 (11")	-
400 (15 3/4")	381 (15")	378 (14 7/8")	300 (11 13/16")	314 (12 3/8")
440 (17 3/8")	421 (16 9/16")	418 (16 7/16")	340 (13 3/8")	354 (13 15/16")
470 (18 1/2")	451 (17 3/4")	448 (17 5/8")	370 (14 9/16")	384 (15 1/8")
510 (20 1/16")	491 (19 5/16")	488 (19 3/16")	410 (16 1/8")	424 (16 11/16")
550 (21 5/8")	531 (20 7/8")	528 (20 13/16")	450 (17 11/16")	464 (18 1/4")

Model	Side height	Back panel height
6436	213 (8 3/8")	210 (8 1/4")
6236	149 (5 7/8")	146 (5 3/4")
6136	117 (4 5/8")	114 (4 1/2")
6036	85 (3 3/8")	82 (3 1/4")
6035	43 (1 11/16")	46 (1 13/16")

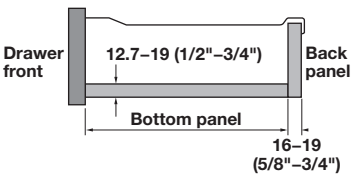

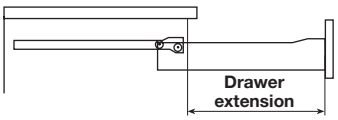

*Allow minimum of 3 mm (1/8") for bottom clearance. If screws are used, increase clearance accordingly.

Dimensional data not binding. Dimensions in mm, inches are approximate. We reserve the right to alter specifications without notice.

Grass Zargen

> Material: Steel; Finish: white

→ 6036

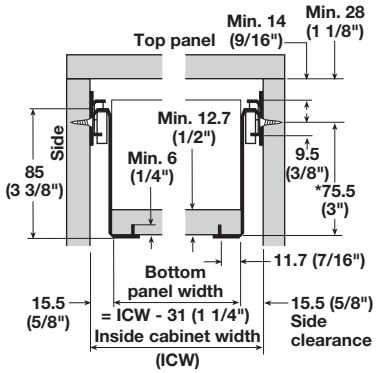

> Side height: 85 mm (3 3/8")

Length	Item No.	Bulk Item No.
270 (10 5/8")	558.27.727	-
350 (13 3/4")	558.27.735	-
400 (15 3/4")	558.27.740	-
440 (17 3/8")	558.27.744	-
470 (18 1/2")	558.27.747	-
510 (20 1/16")	558.27.751	558.27.752
550 (21 5/8")	558.27.755	558.27.756

Supplied With
10 sets

Bulk Supplied With
300 sets

→ 6136

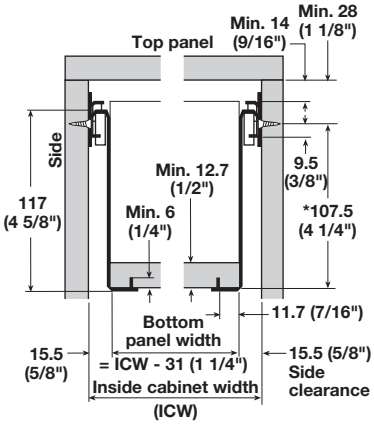

> Side height: 117 mm (4 5/8")

Length	Item No.
350 (13 3/4")	558.21.835
400 (15 3/4")	558.21.840
440 (17 3/8")	558.21.844
470 (18 1/2")	558.21.847
510 (20 1/16")	558.21.851
550 (21 5/8")	558.21.855

Supplied With
5 sets

Dimensional data not binding. Dimensions in mm, inches are approximate. We reserve the right to alter specifications without notice.

Grass Zargen

> Material: Steel; Finish: white

→ 6236

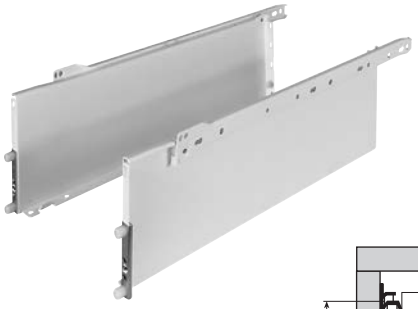

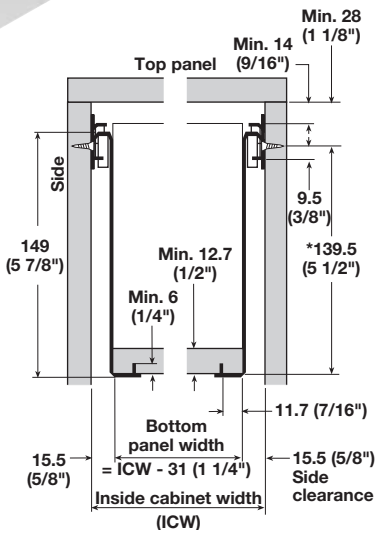

> Side height: 149 mm (5 7/8")

Length	Item No.	Bulk Item No.
350 (13 3/4")	558.23.835	-
400 (15 3/4")	558.23.840	-
440 (17 3/8")	558.23.844	-
470 (18 1/2")	558.23.847	-
510 (20 1/16")	558.23.851	558.23.850
550 (21 5/8")	558.23.855	558.23.856

Supplied With
5 sets

Bulk Supplied With
200 sets

→ 6436

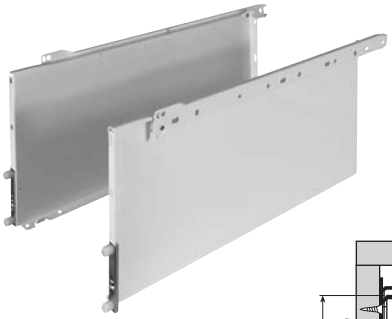

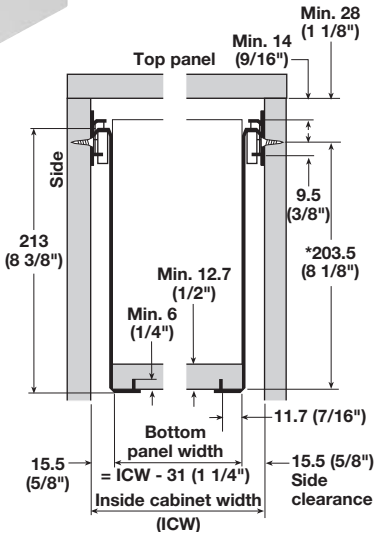

> Side height: 213 mm (8 3/8")

Length	Item No.	Bulk Item No.
350 (13 3/4")	558.24.835	-
400 (15 3/4")	558.24.840	-
440 (17 3/8")	558.24.844	-
470 (18 1/2")	558.24.847	-
510 (20 1/16")	558.24.851	-
550 (21 5/8")	558.24.855	558.24.856

Supplied With
5 sets

Bulk Supplied With
200 sets

Dimensional data not binding. Dimensions in mm, inches are approximate. We reserve the right to alter specifications without notice.

Grass Zargen

→ 6035

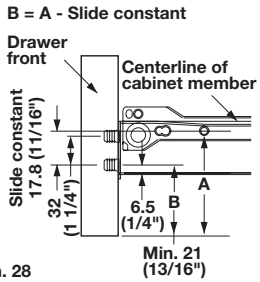

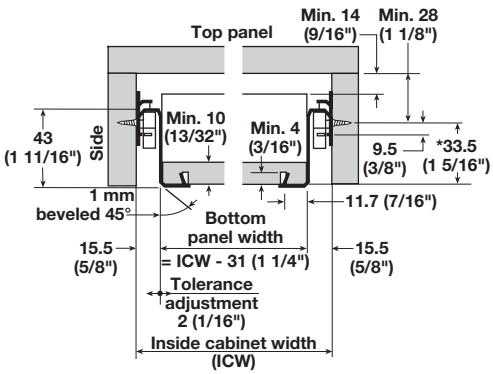

> Side height: 43 mm (1 11/16")
> Material: Steel; Finish: white

Length	Item No.
350 (13 3/4")	558.26.835
400 (15 3/4")	558.26.840
440 (17 3/8")	558.26.844
470 (18 1/2")	558.26.847
510 (20 1/16")	558.26.851
550 (21 5/8")	558.26.855

Supplied With
5 sets

→ Spare Guide Clip

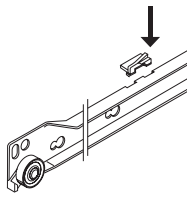

> Material: Steel

Finish	Item No.
white	558.19.291

→ Rear Mounting Bracket

> Material: Plastic

Handing	Item No.
Right	433.19.054
Left	433.19.055

Supplied With
100 pcs.

→ 6036 Router Bit for Zargen and Z Box

> Designed for grooving and beveling the drawer bottoms for the lipped version of the Zargen and Z Box drawer slides
> 13 mm (1/2") shank

	Item No.
	558.18.992

Dimensional data not binding. Dimensions in mm, inches are approximate. We reserve the right to alter specifications without notice.

Grass Zargen

> Designed fo use with Grass Zargen drawer system
> Easy to construct
> Allows end user to customize storage space
> Material: Steel; Finish: white

→ 6100 Side Railing

Ⓐ

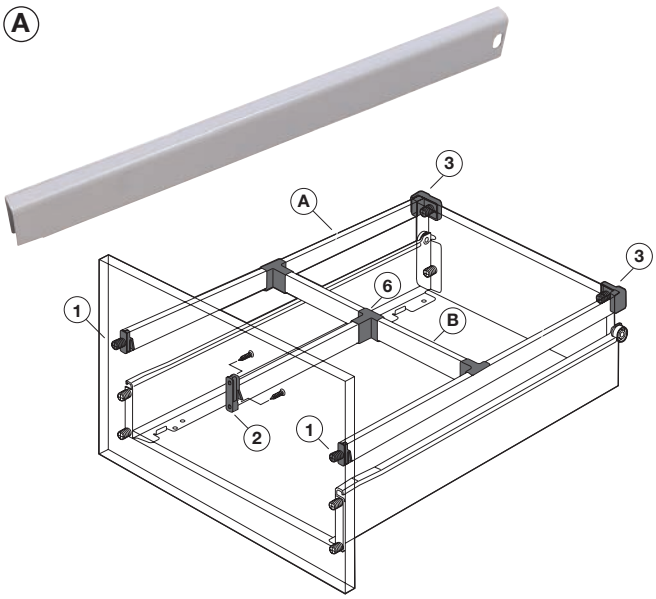

Length	Item No.
400 (15 3/4")	558.19.728
510 (20 1/16")	558.19.755
550 (21 5/8")	558.19.764

Supplied With
10 sets

→ Divider Rail

Ⓑ

> Length: 1000 mm (39 3/8") - cut to size

	Item No.
	558.16.780

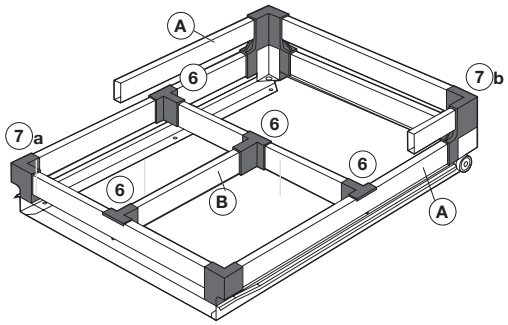

	Description	Item No.
1	front railing clip, dowel mount	558.17.411
2	front partition clip, screw mount	558.17.706
3	back railing clip, dowel mount	558.17.710
4	back railing clip, screw mount	558.17.724
5	back partition clip, screw mount	558.17.779
6	divider railing clip	558.17.733

Supplied With
20 pcs.

Front railing clip dowel mount

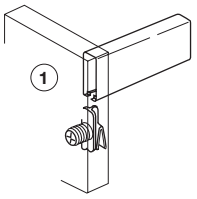

Front partition clip screw mount

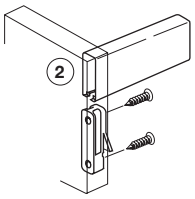

Back railing clip dowel mount

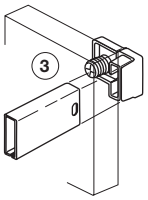

Back railing clip screw mount

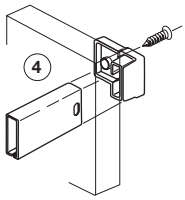

Back partition clip screw mount

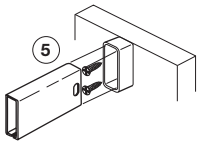

Divider railing clip

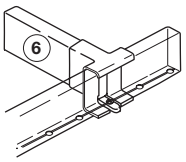

Corner bracket

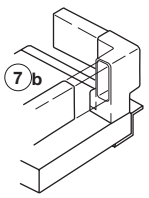

Dimensional data not binding. Dimensions in mm, inches are approximate. We reserve the right to alter specifications without notice.

Grass Zargen Pendaflex

> Designed for use with metal drawer system or wood drawer application
> File bar accommodates lateral file application
> Easy to construct
> Made in the USA

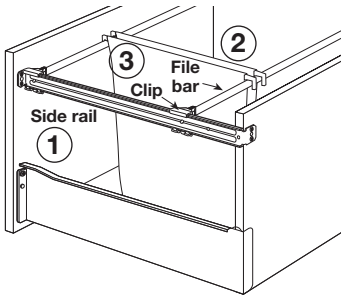

→ Side Rail (1)

> Material: Steel; Finish: white

Use with slide length	Item No.
470 (18 1/2")	558.15.605
510 (20 1/16")	558.15.606
550 (21 5/8")	558.15.607

→ Lateral File Clip (3)

> Material: Plastic

Color	Item No.
white	558.15.692

→ File Bar (2)

> Length: 711 mm (28")
> Material: Steel

Finish	Item No.
white	558.15.690

Dimensional data not binding. Dimensions in mm, inches are approximate. We reserve the right to alter specifications without notice.

Grass Z Box

> Weight capacity: 45 kg (100 lbs.)
> Integrated side mount ball bearing telescopic full extension drawer slide and metal drawer side
> Frameless or face frame mounting
> Hold in detent ensures drawers stay closed
> Easy lever disconnect
> Adjustments: Cam height: ±2 mm; Side: ±1.5 mm
> Meets or exceeds ANSI/BHMA 156.9 Grade 1 testing
> Made in the USA
> Material: Steel, epoxy powder-coated; Finish: white
Slide: Steel; Finish: zinc-plated

> Side height: 6423 - 213 mm (8 3/8")
6223 - 149 mm (5 7/8")
6023 - 85 mm (3 3/8")

6423

6223

Length	6423	6223	6023
350 (13 3/4")	553.31.832	553.31.822	553.31.812
400 (15 3/4")	553.31.833	553.31.823	553.31.813
470 (18 1/2")	553.31.834	553.31.824	553.31.814
510 (20 1/16")	553.31.835	553.31.825	553.31.815
550 (21 5/8")	553.31.836	553.31.826	553.31.816

Supplied With
5 sets left/right cabinet member and left/right drawer member

6023

→ Face Frame Rear Bracket

> Material: Steel

Finish	Item No.
zinc-plated	553.31.990

→ 6036 Router Bit for Zargen and Z Box

> Designed for grooving and beveling the drawer bottoms for the lipped version of the Zargen and Z Box drawer slides
> 13 mm (1/2") shank

	Item No.
	558.18.992

Dimensional data not binding. Dimensions in mm, inches are approximate. We reserve the right to alter specifications without notice.

Grass Z Box

6423

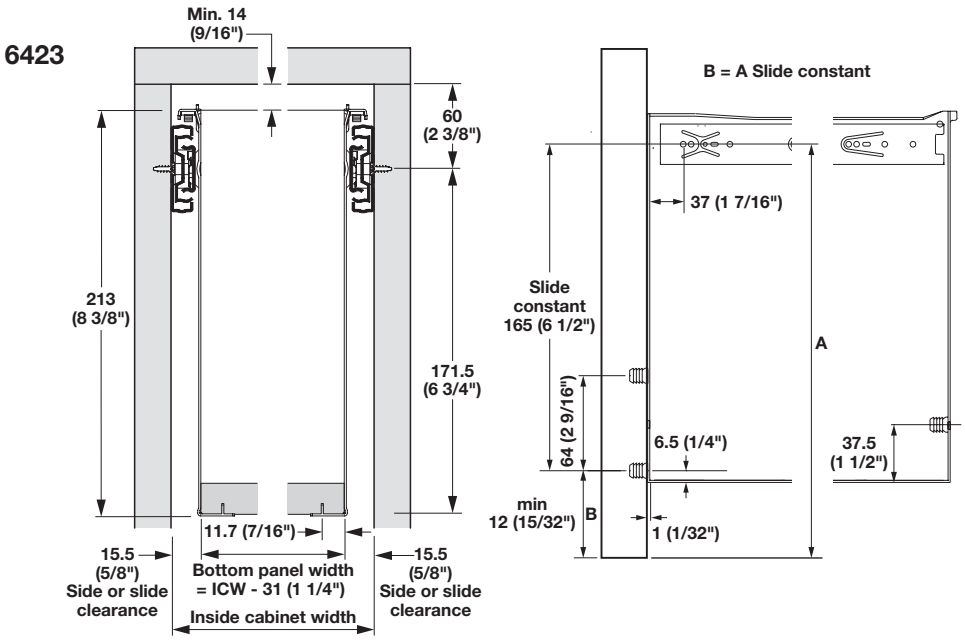

6223

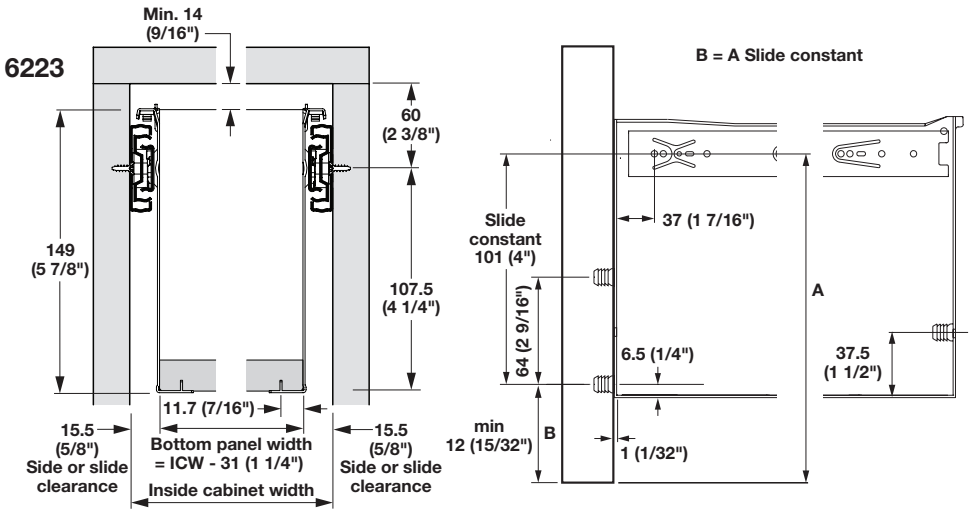

6023

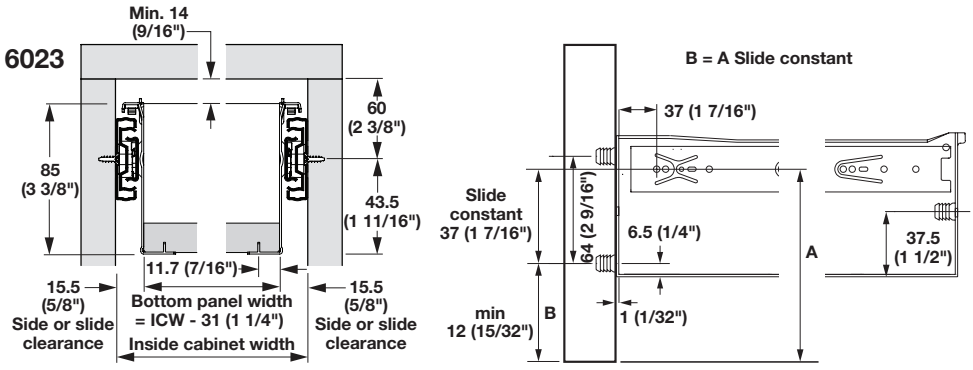

Dimensional data not binding. Dimensions in mm, inches are approximate. We reserve the right to alter specifications without notice.

Grass Zargen

→ Damper Set

Flat Head #4

> For Zargen drawer systems
> Liquid damper for improved performance
> Screw mounted
> Creates a smooth soft close action
> Elongated front mounting hole allows for +/- 2 mm (1/16") vertical adjustment
> Material: Plastic; Color: gray

Drawer weight	Item No.
15 kg (33 lbs.)	421.39.074
30 kg (66 lbs.)	421.39.035
70 kg (154 lbs.)	421.39.076

Supplied With
140 each liquid dampers
140 each actuators in poly bag
Mounting instructions

→ Soft Closing Mechanism

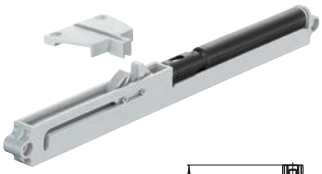

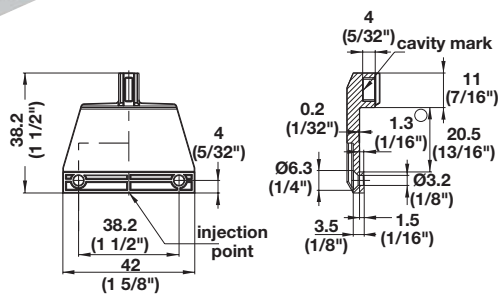

> Fits over Zargen lip 20.5 mm (13/16")
> Material: Plastic; Color: light gray and black

Description	Item No.
Actuator	432.13.592
Damper	432.13.511

Note
For Grass Zargen only.
Must purchase both actuator and damper, sold separately.

Dimensional data not binding. Dimensions in mm, inches are approximate. We reserve the right to alter specifications without notice.

Grass Zargen, ZBox Machines

> Bore depth automatically adjusts to material thickness
> Functional design; Easy, fast and efficient operation
> Easy maintenance

→ Grass Pro I

> pneumatic drilling/insertion machine

Description	Model	Item No.
220V single phase	80131	558.18.270
220V three phase	80132	558.18.271
110V single phase	80068	001.97.080

Supplied With
Combined stop and ruler 600 mm (23 5/8") long
Wood supporting table 600 x 400 mm (23 5/8" x 15 3/4")
Hex keys, open-jaw wrenches, 10, 13 and 17 mm (3/8", 1/2", 11/16")
Side stop left and right
Operating manual

→ Bit Router

	Item No.
	558.18.992

→ Grass Z Ram

	Model	Item No.
	93250-01	558.18.284

→ Counter Sink Drill Bit

> Material: Carbide

Description	Model	Item No.
10 mm LH	00222-01	558.18.991
10 mm RH	00229-01	558.18.990

Accessories, optional

→ Short Fence Stop

	Item No.
	001.97.027

→ Extension Fence

> 400–1650 mm (15 3/4"–64 8/32")

	Item No.
	001.97.120

Dimensional data not binding. Dimensions in mm, inches are approximate. We reserve the right to alter specifications without notice.

Supra Drawer System

> Weight capacity: 35 kg (75 lbs.)
> Easy assembly and installation
> Optional soft close
> Bottoms and backs use 16 mm (5/8") board ICW-31
> Bottom rests securely in place by 2 prongs on drawer member

→ Drawer Members (A)

Height
86 mm (3 3/8")

Height
150 mm (6")

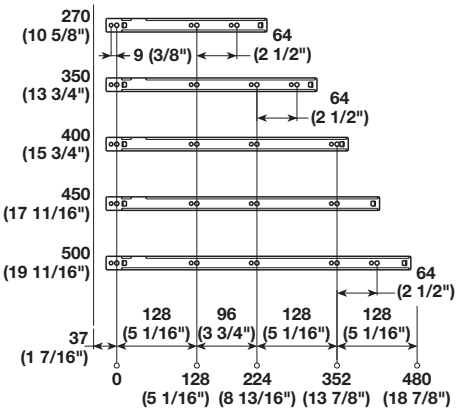

> Material: Steel, epoxy-coated; Color: white RAL 9003

Length	Height	
	86 (3 3/8")	150 (6")
270 (11")	558.56.451	-
350 (14")	558.56.752	558.56.772
400 (16")	558.56.453	558.56.473
450 (18")	558.56.754	558.56.774
500 (20")	558.56.755	558.56.775

Supplied With
2 pcs. packed separately in boxes of 25 sets.

→ Cabinet Members, required (B)

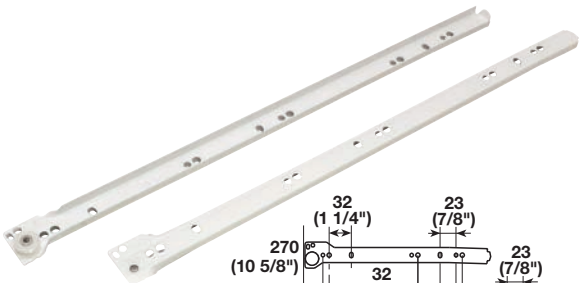

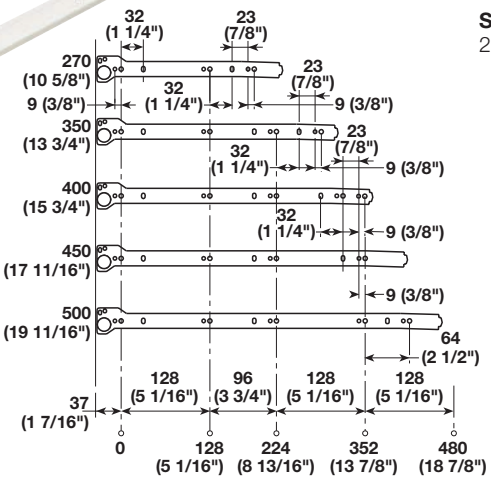

Length	Item No.
270 (11")	558.57.401
350 (14")	558.57.702
400 (16")	558.57.403
450 (18")	558.57.704
500 (20")	558.57.705

Supplied With
2 pcs. packed separately in boxes of 25 sets.

Dimensional data not binding. Dimensions in mm, inches are approximate. We reserve the right to alter specifications without notice.

Supra Drawer System

→ Front Fixing Bracket, adjustable Ⓒ

> For 86 mm (3 1/4") and 150 mm (6") drawers
> Lateral adjustment: 3 mm (1/8")
> Height adjustment: ±2 mm (1/16")
> Height adjustment: 4 mm (5/32") without tools
> W x D x H: 15 x 38 x 75 mm (9/16" x 1 1/2" x 2 15/16")
> Material: Steel/Plastic; Finish/Color: nickel-plated/white

Mounting	Item No.
screw	558.57.499
dowel	558.57.797

Supplied With
100 pairs

→ Indamatic Soft Closer, optional

> Material: Plastic

Color	Item No.
gray/white	558.57.496

Supplied With
100 pcs.

→ Cover Caps, optional

> Decorative cap snaps over front fixing brackets
> L x W x H: 28 x 19 x 15 mm (1 1/8" x 3/4" x 9/16")
> Material: Plastic

Color	Item No.
white	558.56.499

Supplied With
100 pairs

Dimensional data not binding. Dimensions in mm, inches are approximate. We reserve the right to alter specifications without notice.

Salice Full Extension

→ A7555 Futura 16

Frameless

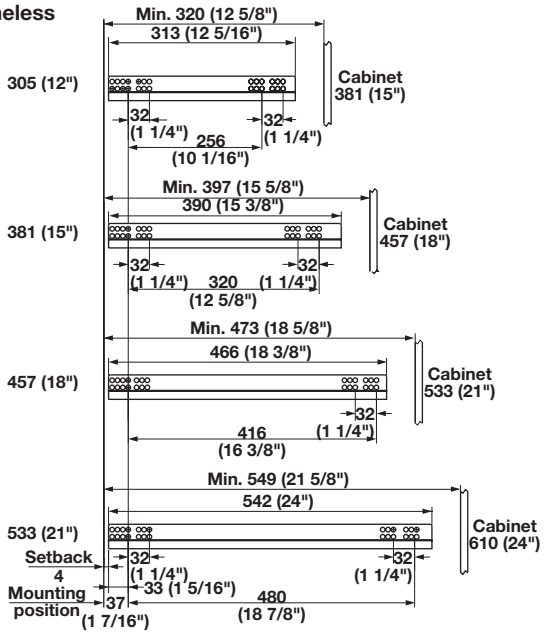

> Dynamic weight capacity: 35 kg (75 lbs.)/pair
> Integrated soft close with 52 mm (2 1/16") closing range
> Meets or exceeds BHMA grade 1 testing requirements
> Slotted hole for depth adjustment
> Front clips disconnect for easy drawer insertion and removal
> Material: Steel; Finish: zinc-plated

Slide length	Drawer box length	Item No.
266 (10 1/2")	229 (9")	433.17.723
313 (12 5/16")	305 (12")	433.17.730
390 (15 3/8")	381 (15")	433.17.738
466 (18 3/8")	457 (18")	433.17.745
542 (21 3/8")	533 (21")	433.17.753

Note
Face frame add rear bracket with minimum cabinet depth 6–45 mm (1/4"–1 3/4")

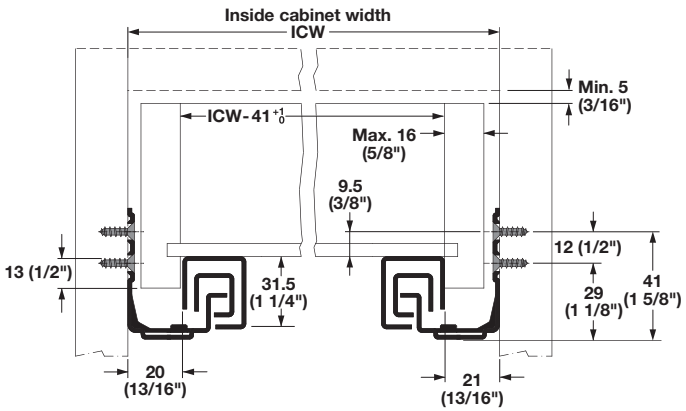

Calculation formula for outside drawer width

Drawer Side Thickness: Minimum: 12 mm (1/2")
Maximum: 16 mm (5/8")
Maximum Drawer Height = Opening minus 25 mm (1")

Drawer side thickness	16 (5/8")	15 (19/32")	14 (9/16")	13 (1/2")	12 (15/32")
Deduct from ICW	9 (3/8")	11 (7/16")	13 (1/2")	16 (5/8")	17 (21/32")

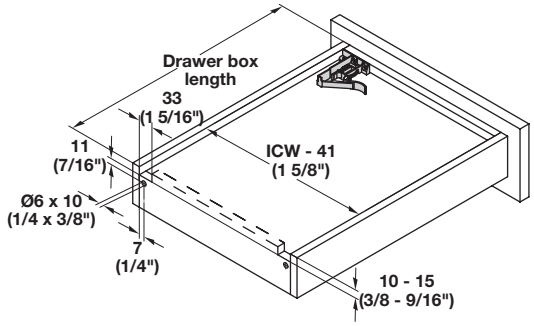

→ Clips, required

> Material: Plastic

Color/Version	Item No.
gray/height adjustable	421.23.000
orange/6 way adjustable	421.23.001

Supplied With
Right/left clips

→ Rear Face Frame Mounting Brackets, optional

> Material: Steel; Finish: zinc-plated

Version	Item No.
Standard	433.17.000
Narrow	433.17.001

Note 2 pcs. required (for 1 pair of slides).

Flat head screws pages 12.7-12.8, 12.10, 12.13

Dimensional data not binding. Dimensions in mm, inches are approximate. We reserve the right to alter specifications without notice.

Salice Full Extension

→ A7955 Futura 19

soft&silent

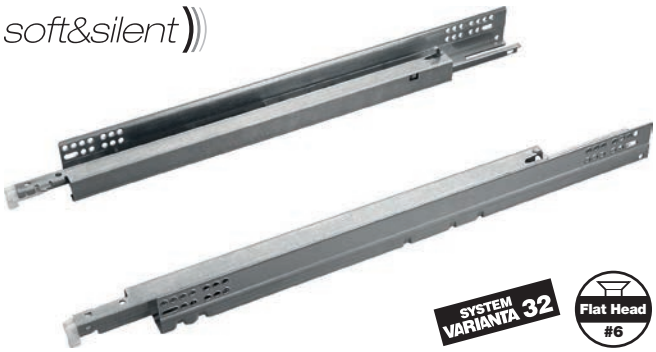

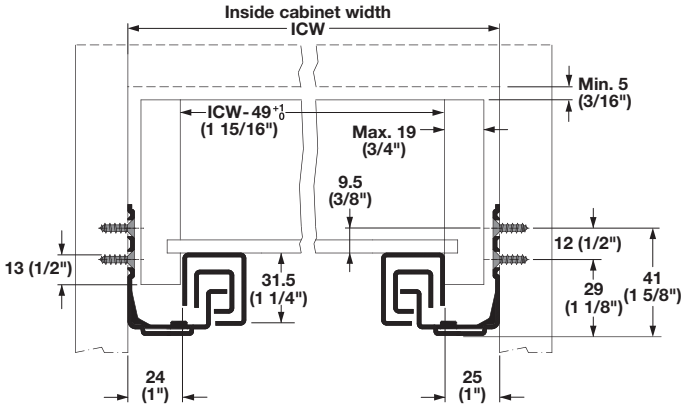

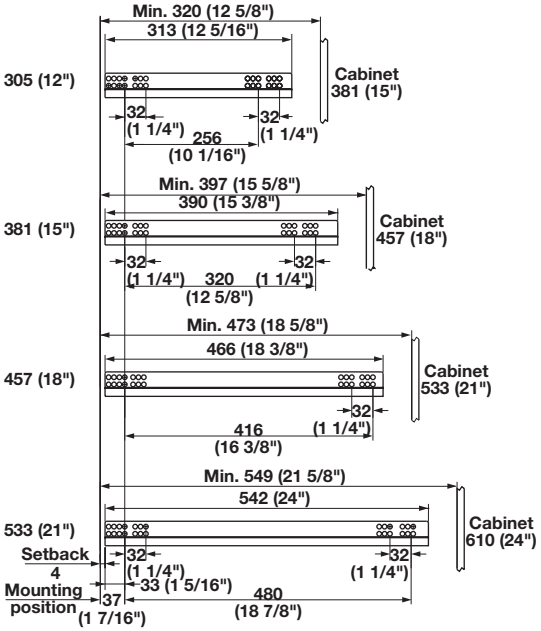

Drawer Side Thickness: 19 mm (3/4")
Maximum Drawer Height = Opening minus 25 mm (1")

Drawer side thickness	19 (3/4")	18 (23/32")	17 (21/32")	16 (5/8")	15 (19/32")
Deduct from ICW	11 (7/16")	13 (1/2")	15 (19/32")	17 (21/32")	19 (3/4")

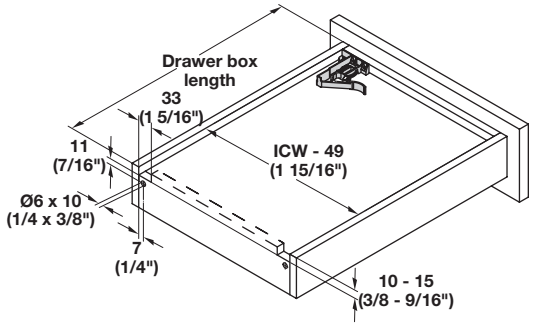

> Dynamic weight capacity: 35 kg (75 lbs.)/pair
> Designed for drawer boxes with 19 mm (3/4") material
> Integrated concealed soft close with 52 mm (2 1/16") closing range
> BHMA grade 1 tested
> Slotted hole for depth adjustment
> Front clips disconnect for easy drawer insertion and removal
> Material: Steel; Finish: zinc-plated

Slide length	Drawer box length	Item No.
315 (12 3/8")	305 (12")	433.17.731
391 (15 3/8")	381 (15")	433.17.739
467 (18 3/8")	457 (18")	433.17.746
543 (21 3/8")	533 (21")	433.17.754

→ Rear Face Frame Mounting Brackets, optional

> Material: Steel; Finish: zinc-plated

Version	Item No.
Standard	433.17.000
Narrow	433.17.001

Note 2 pcs. required (for 1 pair of slides).

→ Clips, required

> Material: Plastic

Color/Version	Item No.
gray/height adjustable	421.23.000
orange/6 way adjustable	421.23.001

Supplied With
Right/left clips

Flat head screws pages 12.7-12.8, 12.10, 12.13

Dimensional data not binding. Dimensions in mm, inches are approximate. We reserve the right to alter specifications without notice.

Salice Full Extension

350 - 400 - 450 (14" - 16" - 18")

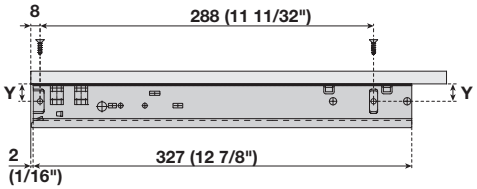

500 (20")

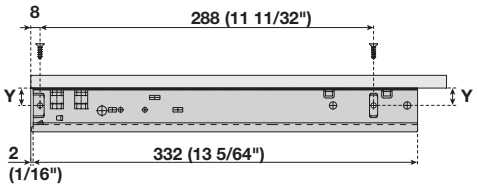

550 - 600 (22" - 24")

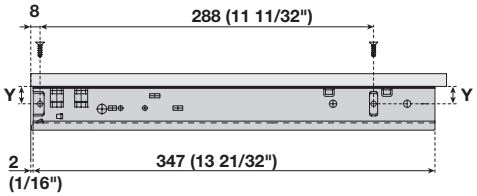

Y = min. 15 (9/16")

> Bottom mounted
> Easily mounts to fixed open shelves, shelves behind doors or to the cabinet floor
> Provides convenient, simple access to stored items that do not require a drawer
> Weight capacity: Dynamic: 35 kg (75 lbs.); Static: 45 kg (100 lbs.)
> Material: Steel; Finish: zinc-plated

Note
Magnetic catch to keep drawer extended 421.23.030

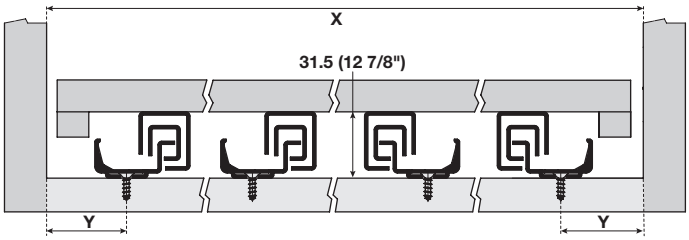

Shelf adjustment with clip A710.610

Shelf height adjustment (+ 2.5 mm) using the lever indicated

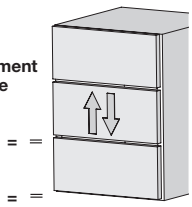

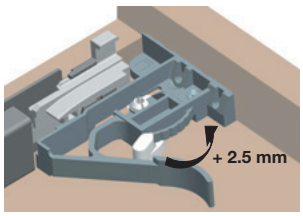

→ A65559 Shelf Slide with Soft Close

Box or shelf length	Item No.
320 (12")	433.22.100
350 (14")	433.22.101
400 (16")	433.22.102
450 (18")	433.22.103
500 (20")	433.22.104
550 (22")	433.22.105
600 (24")	433.22.106

→ Clips, required

> Material: Plastic

Color/Version	Item No.
gray/height adjustable	421.23.000
orange/6 way adjustable	421.23.001

Supplied With
Right/left clips

→ A65579 Shelf Slide Push

Box or shelf length	Item No.
320 (12")	433.22.110
350 (14")	433.22.111
400 (16")	433.22.112
450 (18")	433.22.113
500 (20")	433.22.114
550 (22")	433.22.115
600 (24")	433.22.116

→ Rear Hook Bracket, required for shelf

> Screw-on, reversible
> Attaches to the back of the shelf to capture the hook on the undermount slide
> Material: Plastic

Color	Item No.
white	433.22.000

Note For shelves that are less than 12 mm (1/2"), the runner can be used together with the rear hook bracket, thus eliminating the need to notch and drill the back of the shelf or shallow box.

Dimensional data not binding. Dimensions in mm, inches are approximate. We reserve the right to alter specifications without notice.

Salice Full Extension

> Dynamic weight capacity: 35 kg (75 lbs.)/pair
> Unique lengths for 300, 350, 400, 450 mm (12", 14", 16", 20") deep panels
> Cushioned open
> For drawer boxes 13–16 mm (1/2"–5/8")
> Choose from soft close or push-to-open
> Interior drawer box width: ICW-41
> Material: Steel; Finish: zinc-plated

→ A6555 Closet Slide with Soft Close

Length	Item No.
280 (11")	421.23.228
320 (12 5/8")	421.23.232
380 (14 15/16")	421.23.238
480 (18 7/8")	421.23.248

Supplied With 20 pcs. each L/R, packed separately

Note Front locking clips are required

→ A6557 Closet Slide Push

Length	Item No.
280 (11")	421.23.428
320 (12 5/8")	421.23.432
380 (14 15/16")	421.23.438
480 (18 7/8")	421.23.448

Supplied With 6 pair

Note Front locking clips are required

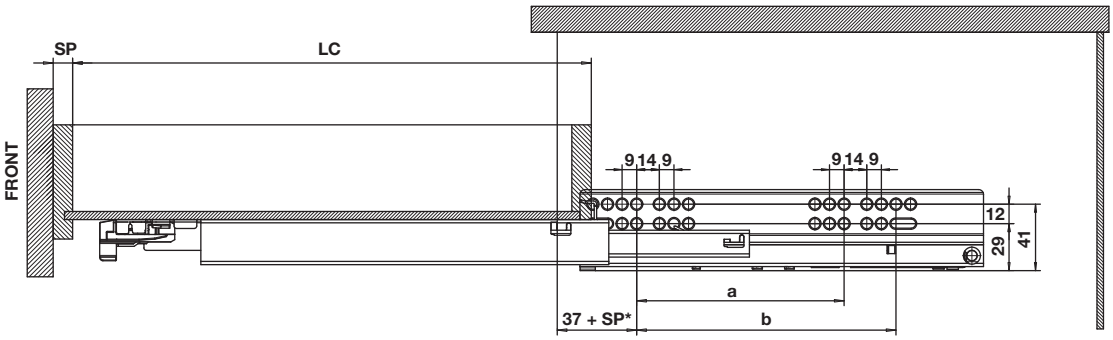

Panel depth	LC	a	b
12"	280	128	160
14"	320	128	160
16"	380	128	160
20"	480	224	256
	mm	mm	mm

***Setback to front edge of CM is thickness of drawer box FRONT material. If using 5/8" material to 4th hole back 37 + 16 = 53**

LC = Length of drawer not including box FRONT
SP = Thickness of box FRONT material
Note that total length of drawer box is LC + SP.

→ Clips, required

> Material: Plastic

Color/Version	Item No.
gray/height adjustable	421.23.000
orange/6 way adjustable	421.23.001

Supplied With
Right/left clips

Dimensional data not binding. Dimensions in mm, inches are approximate. We reserve the right to alter specifications without notice.

Salice Full Extension

→ A7557 Futura Push - 16

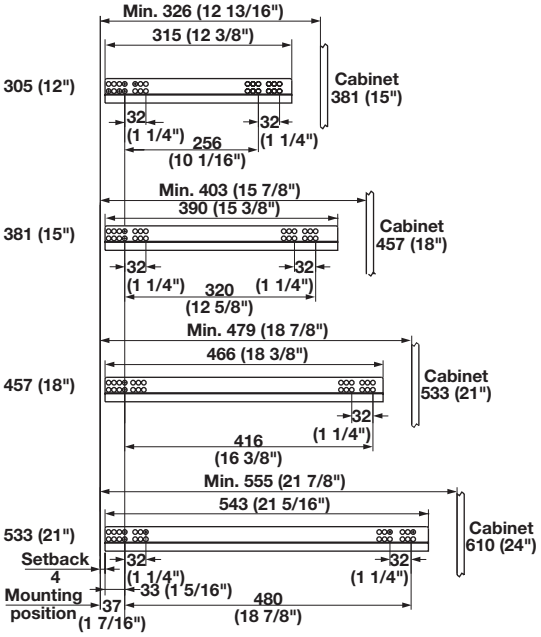

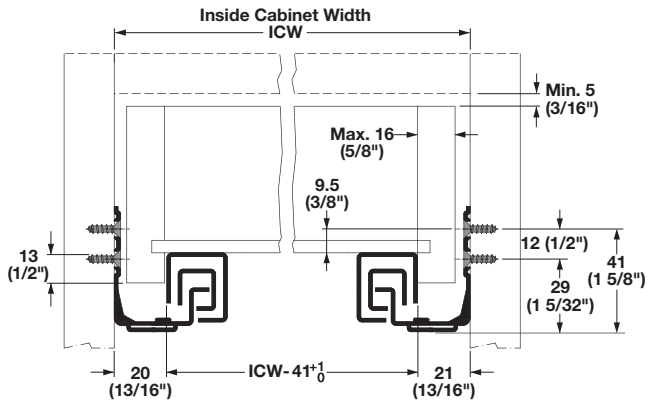

Drawer Side Thickness: Minimum: 12 mm (1/2")
Maximum: 16 mm (5/8")
Maximum Drawer Height = Opening minus 25 mm (1")

Drawer side thickness	16 (5/8")	15 (19/32")	14 (9/16")	13 (1/2")	12 (15/32")
Deduct from ICW	9 (3/8")	11 (7/16")	13 (1/2")	16 (5/8")	17 (21/32")

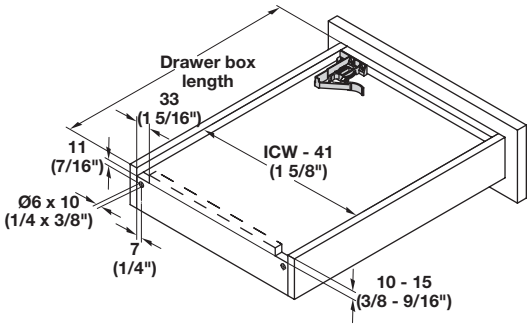

> Face frame mounted
> Weight capacity: 35 kg (75 lbs.)/pair
> Perfect for drawers without handles
> Slight pressure on the drawer front opens the drawer
> "Push" mechanism is fully integrated into the slide
> Front clips disconnect for easy drawer insertion and removal
> Slotted hole for depth adjustment
> Material: Steel; Finish: zinc-plated

Slide length	Drawer box length	Item No.
315 (12 15/16")	305 (12")	433.17.830
391 (15 3/8")	381 (15")	433.17.838
467 (18 3/8")	457 (18")	433.17.845
543 (21 5/16")	533 (21")	433.17.853

→ Clips, required

> Material: Plastic

Color/Version	Item No.
gray/height adjustable	421.23.000
orange/6 way adjustable	421.23.001

Supplied With
Right/left clips

→ Face Frame Mounting Brackets, optional

> Material: Steel

Finish	Item No.
zinc-plated	433.17.000

Note
2 pcs. required (for 1 pair of slides).

Flat head screws pages 12.7-12.8, 12.10, 12.13

Dimensional data not binding. Dimensions in mm, inches are approximate. We reserve the right to alter specifications without notice.

Salice Full Extension

→ A6557 Futura Push - 16

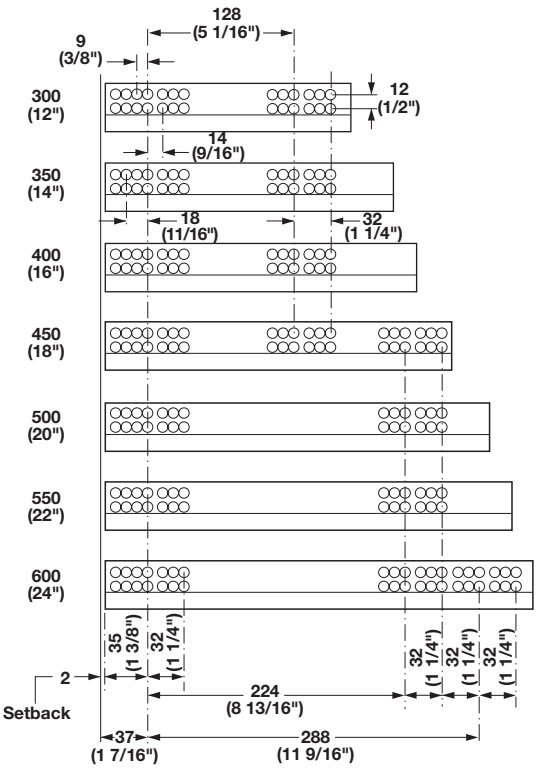

- > Frameless mounted
- > Weight capacity: 22.68 kg (50 lbs.)/pair
- > Perfect for drawers without handles
- > Slight pressure on the drawer front opens the drawer
- > "Push" mechanism is fully integrated into the slide
- > 2.5 mm (1/8") height adjustment
- > Front clip disconnect for easy drawer insertion and removal
- > Material: Steel; Finish: zinc-plated

Length	Item No.
300 (12")	421.23.830
350 (14")	421.23.835
400 (16")	421.23.840
450 (18")	421.23.845
500 (20")	421.23.850
550 (22")	421.23.855
600 (24")	421.23.860

Note
For drawer with front application, the setback is 2 mm (1/16") plus the thickness of the drawer box material unless the drawer is notched.
If it is notched, the setback is 2 mm (1/16").

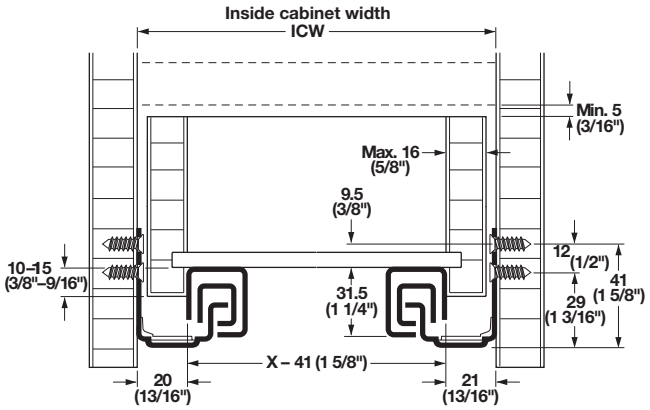

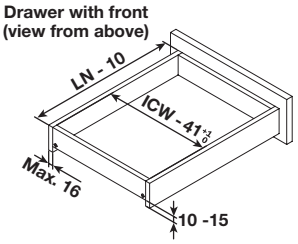

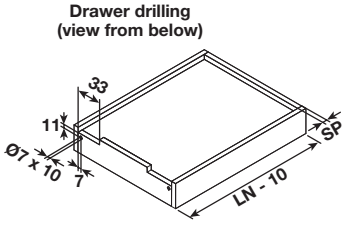

LN = Runner length
SP = Material thickness

→ Clips, required

- > Material: Plastic

Color/Version	Item No.
gray/height adjustable	421.23.000
orange/6 way adjustable	421.23.001

Supplied With
Right/left clips

Flat head screws	pages 12.7-12.8, 12.10, 12.13
Varianta screws	page 12.16

Dimensional data not binding. Dimensions in mm, inches are approximate. We reserve the right to alter specifications without notice.

Salice Full Extension

→ A6558 Futura Push - 16

> Perfect for light duty drawers without handles
> With soft close
> Frameless mounted
> Weight capacity: 22.68 kg (50 lbs.)/pair
> Slight pressure on the drawer front opens the drawer
> "Push" mechanism is fully integrated into the slide
> Front clips disconnect for easy drawer insertion and removal
> Designed for frameless cabinet mounting
> Material: Steel; Finish: zinc-plated

Slide length	Drawer box length	Item No.
300 (12")	290 (11 7/16")	421.23.630
350 (14")	340 (13 3/8")	421.23.635
400 (16")	390 (15 3/8")	421.23.640
450 (18")	440 (17 5/16")	421.23.645
500 (20")	490 (19 5/16)	421.23.650

For the function Push is required an A value = 2.5 mm (1/8").
This value is obtained by placing the runner at 37 mm (1 7/16") from the edge of the cabinet.

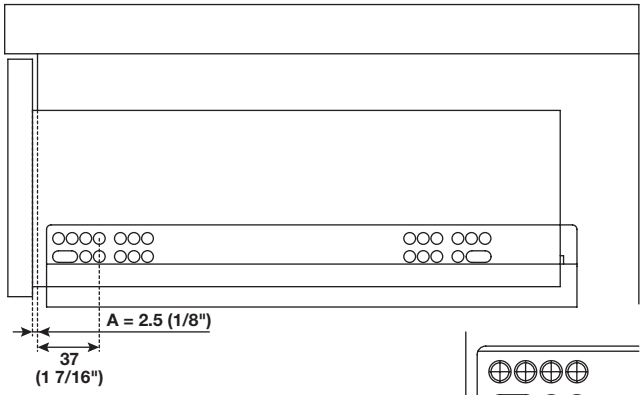

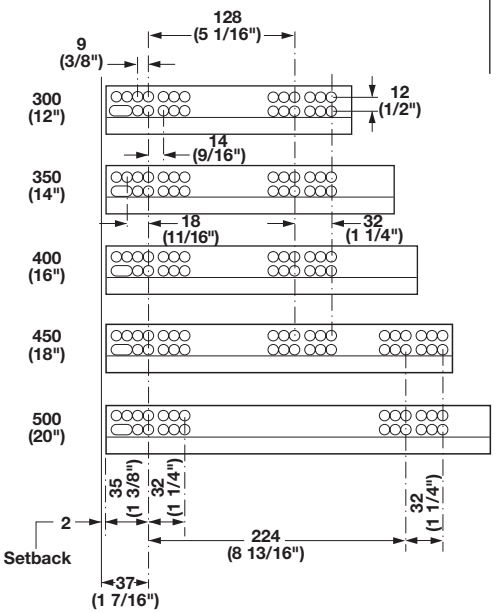

Minimum depth of cabinet slide length + 10 mm (3/8")

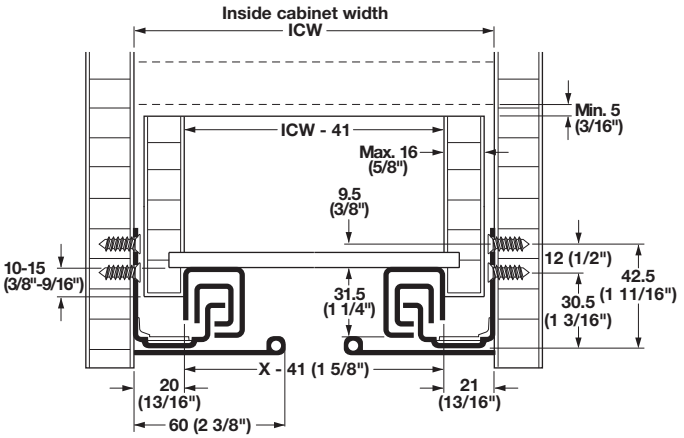

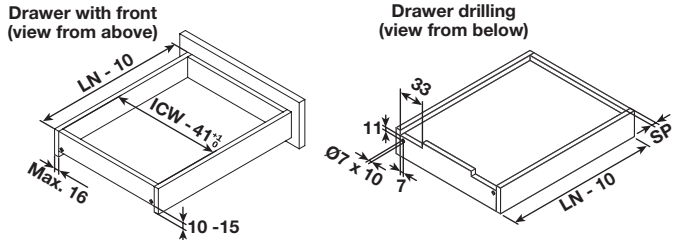

LN = Runner length
SP = Material thickness

→ Clips, required

> Material: Plastic

Color/Version	Item No.
gray/height adjustable	421.23.000
orange/6 way adjustable	421.23.001

Supplied With
Right/left clips

Flat head screws	pages 12.7-12.8, 12.10, 12.13
Varianta screws	page 12.16

Dimensional data not binding. Dimensions in mm, inches are approximate. We reserve the right to alter specifications without notice.

Salice Full Extension

→ F70 Smove

> Weight capacity: Dynamic: 70 kg (154 lbs.)
> Static: 77 kg (170 lbs.)
> Full extension with a synchronized mechanism
> Fully integrated soft close mechanism
> Elongated holes for depth and height adjustment
> Adjustable clips allow for easy drawer insertion and removal
> Tool-less height adjustments: +2.5 mm (3/32")
> Tool-less side adjustments: ±1.5 mm (1/16")
> Tool-less depth adjustments: +/-3 mm (1/8")
> For 12–16 mm (1/2"–5/8") drawer box
> 100% made in Italy
> Material: Steel; Finish: bright zinc-plated

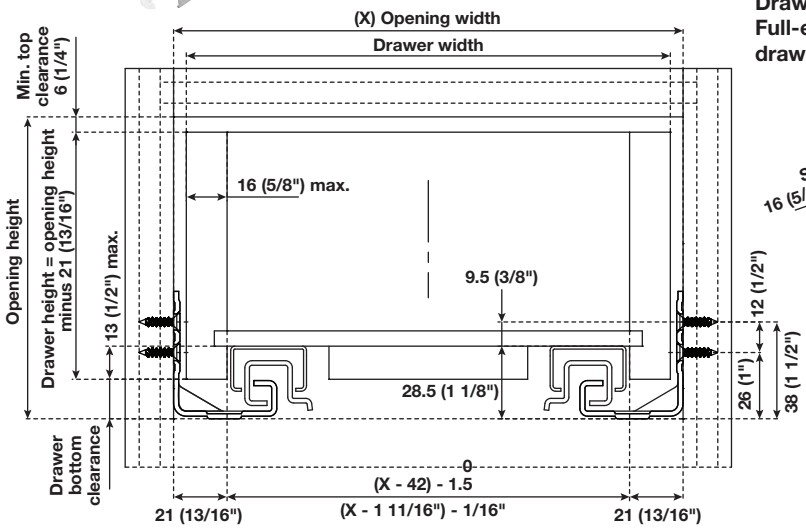

Drawer dimensions and drilling
Full-extension runner for 12 mm (1/2") to 16 mm (5/8") drawer material

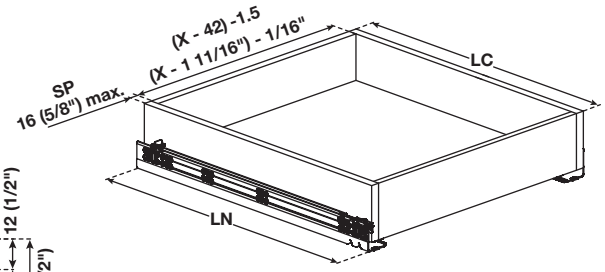

SP = Drawer side thickness
LN = Nominal runner length
LC = Drawer length

Drawer back preparation

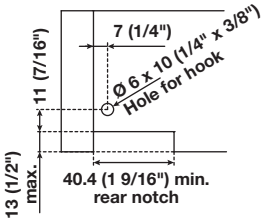

*76.2 (3") min. rear notch with push synchronizer and tilt adjustment lever

For Face Frame Construction

Drawer length LC	Runner length LN	Min. inside cabinet depth w/ metal socket	Max. inside cabinet depth w/ metal socket	Min. inside cabinet depth	Item No.
381 (15")	392 (15 7/16")	402 (15 27/32")	446 (17 9/16")	401 (15 25/32")	421.23.401
457 (18")	468 (18 13/32")	480 (18 27/32")	522 (20 9/16")	477 (18 25/32")	421.23.402
533 (21")	544 (21 13/32")	557 (21 29/32")	598 (23 17/32")	554 (21 1316")	421.23.403

For Frameless Construction

Drawer length LC	Runner length LN	Min. inside cabinet depth	Item No.
457 (18")	468 (18 13/32")	480 (18 27/32")	421.23.412
533 (21")	544 (21 13/32")	554 (21 13/16")	421.23.413
610 (24")	621 (24 15/32")	630 (24 25/32")	421.23.414
686 (27")	697 (27 7/16")	709 (27 29/32")	421.23.415
762 (30")	773 (30 7/16")	786 (30 15/16")	421.23.416

→ Tilt Adjustment Levers*

> Material: Plastic

	Item No.
	421.23.009

Supplied With Right/left clips

→ Clips, required

> Standard mount
> Tool-free lateral and depth adjustments
> Pre-drilled Ø2.5 mm (3/32") hole is recommended
> Material: Plastic/Steel

Version	Item No.
Without flange	421.23.006
With flange	421.23.007

Supplied With Right/left clips

Dimensional data not binding. Dimensions in mm, inches are approximate. We reserve the right to alter specifications without notice.

Salice Full Extension

→ F70 Push

> Weight capacity: Dynamic: 70 kg (154 lbs.)
Static: 77 kg (170 lbs.)
> Full extension with a synchronized mechanism
> Integrated push opening
> Elongated holes for depth and height adjustment
> Adjustable clips allow for easy drawer insertion and removal
> Tool-less height adjustments: +2.5 mm (3/32")
> Tool-less side adjustments: ±1.5 mm (1/16")
> Tool-less depth adjustments: +/-3 mm (1/8")
> For 12–16 mm (1/2"–5/8") drawer box
> 100% made in Italy
> Material: Steel; Finish: bright zinc-plated

Drawer dimensions and drilling
Full-extension runner for 12 mm (1/2") to 16 mm (5/8") drawer material

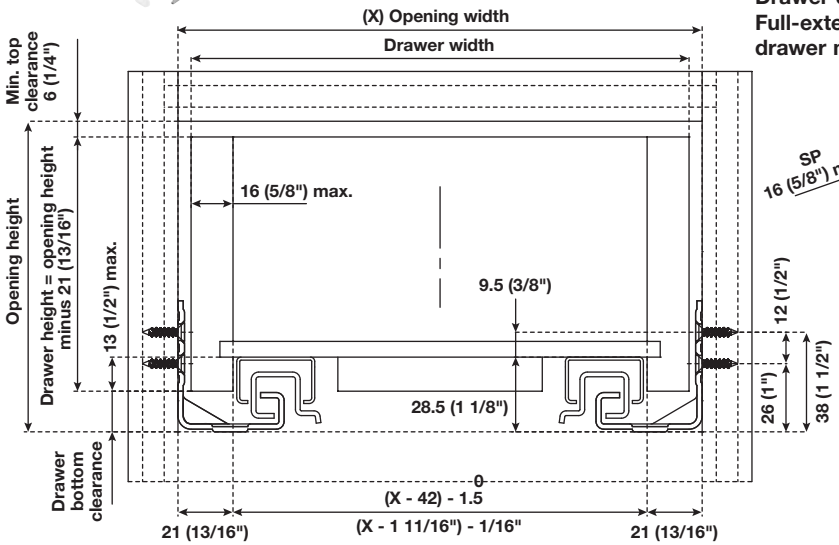

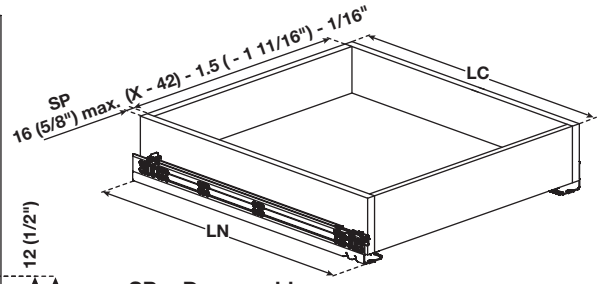

SP = Drawer side thickness
LN = Nominal runner length
LC = Drawer length

Drawer back preparation

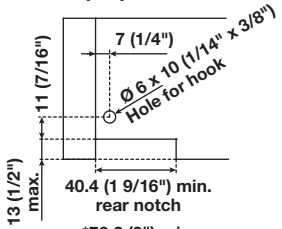

*76.2 (3") min. rear notch with push synchronizer and tilt adjustment lever

For Face Frame Construction

Drawer length LC	Runner length LN	Min. inside cabinet depth w/ metal socket	Max. inside cabinet depth w/ metal socket	Min. inside cabinet depth	Item No.
381 (15")	392 (15 7/16")	402 (15 27/32")	446 (17 9/16")	401 (15 25/32")	421.23.451
457 (18")	468 (18 13/32")	480 (18 27/32")	522 (20 9/16")	477 (18 25/32")	421.23.452
533 (21")	544 (21 13/32")	557 (21 29/32")	598 (23 17/32")	554 (21 1316")	421.23.453

For Frameless Construction

Drawer length LC	Runner length LN	Min. inside cabinet depth	Item No.
457 (18")	468 (18 13/32")	480 (18 27/32")	421.23.462
533 (21")	544 (21 13/32")	554 (21 13/16")	421.23.463
610 (24")	621 (24 15/32")	630 (24 25/32")	421.23.464
686 (27")	697 (27 7/16")	709 (27 29/32")	421.23.465
762 (30")	773 (30 7/16")	786 (30 15/16")	421.23.466

→ Tilt Adjustment Levers*

> Material: Plastic

	Item No.
	421.23.009

Supplied With Right/left clips

→ Clips, required

> Standard mount
> Tool-free lateral and depth adjustments
> Pre-drilled Ø2.5 mm (3/32") hole is recommended
> Material: Plastic/Steel

Version	Item No.
Without flange	421.23.006
With flange	421.23.007

Supplied With Right/left clips

Dimensional data not binding. Dimensions in mm, inches are approximate. We reserve the right to alter specifications without notice.

Grass Full Extension

→ Dynapro - 16 3-D

- > Dynamic weight capacity: 45 kg (100 lbs.)
- > Drawer width: max. 1219 mm (48")
- > Face frame or frameless application
- > Integrated soft close liquid damping provides sleek, smooth closing
- > Fully synchronized runner for the ultimate in smooth silent operation
- > Continuous self-locking of drawer when pushed onto the drawer
- > Clip features: Side to side, height, depth and tilt adjustment for perfect drawer alignment
  - Tool-less integrated height adjustment +3.5 mm (9/64")
  - Tool-less adjustment adapter for side adjustment ±1.5 mm (1/16") and depth adjustment +3 mm (1/8")
- > Meets or exceeds BHMA Grade 1 testing requirements
- > *3-D version adds tilt adjustment +4 mm (5/32")
- > For 12.7–16 mm (1/2"–5/8") drawer box
- > Material: Steel; Finish: zinc-plated

soft&silent

Note
All items require R/L front locking device and R/L rear adjustment adapter, see pages **8.69–8.70**.

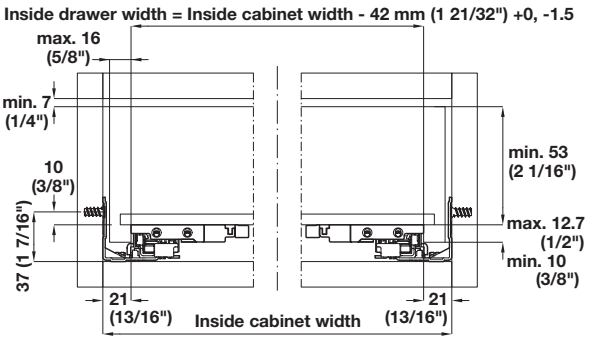

Drawer length	Min. installation depth	Max. installation depth	Item No.
229 (9")	273 (10 3/4")	352 (13 7/8")	433.19.425
305 (12")	327 (12 7/8")	370 (14 9/16")	433.19.433
381 (15")	403 (15 7/8")	446 (17 9/16")	433.19.441
457 (18")	479 (18 27/32")	522 (20 9/16")	433.19.448
533 (21")	555 (21 27/32")	598 (23 17/32")	433.19.456

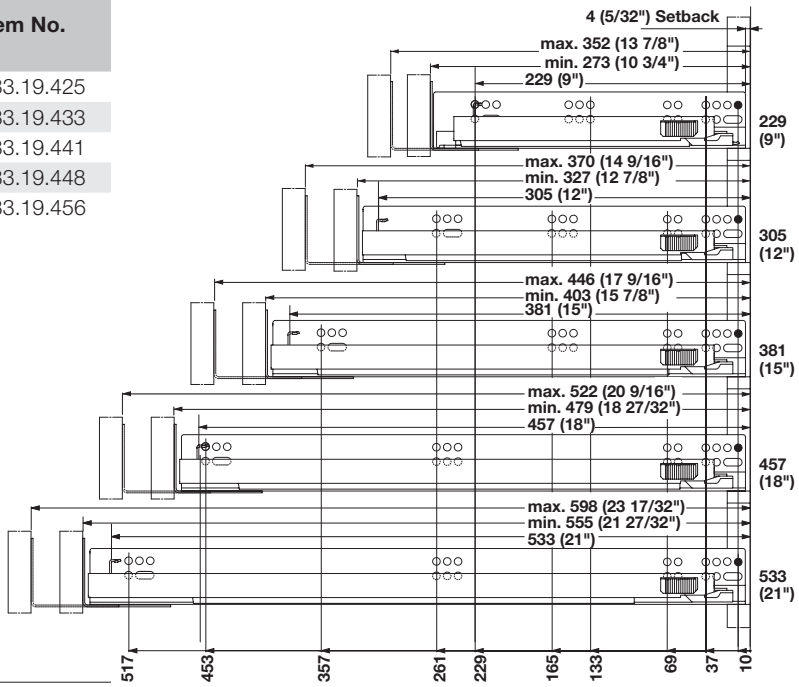

Flat head screws	pages 12.7-12.8, 12.10, 12.13
Varianta screws	page 12.16
Locking devices and rear adjustment bracket	pages 8.69-8.70

Dimensional data not binding. Dimensions in mm, inches are approximate. We reserve the right to alter specifications without notice.

Grass Full Extension

→ Dynapro 2.0 16

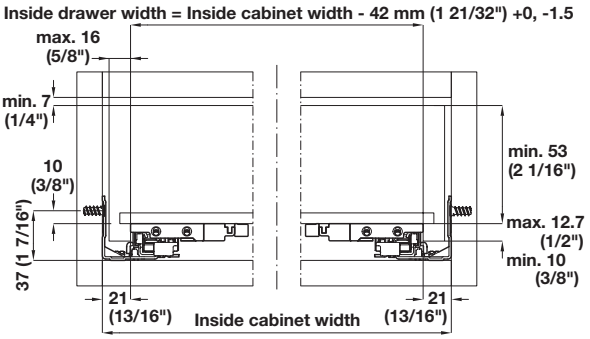

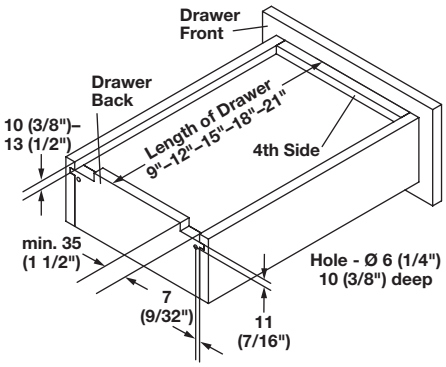

> Dynamic weight capacity: 40 kg (90 lbs.)
> For drawers up to 48" wide
> Face frame or frameless application
> Integrated soft close liquid damping provides sleek, smooth closing
> Fully synchronized runner for the ultimate in smooth silent operation
> Continuous self-locking of drawer when pushed onto the drawer
> Clip features: Side to side, height, depth and tilt adjustment for perfect drawer alignment
  - Tool-less integrated height adjustment +3.5 mm (9/64")
  - Tool-less adjustment adapter for side adjustment ±1.5 mm (1/16") and depth adjustment +3 mm (1/8")
> Meets or exceeds BHMA Grade 1 testing requirements
> For 12.7–16 mm (1/2"–5/8") drawer box
> Material: Steel; Finish: zinc-plated

Drawer length	Min. installation depth	Max. installation depth	Item No.	Bulk
229 (9")	273 (10 3/4")	352 (13 7/8")	433.19.380	-
305 (12")	327 (12 7/8")	370 (14 9/16")	433.19.382	-
381 (15")	403 (15 7/8")	446 (17 9/16")	433.19.384	-
457 (18")	479 (18 27/32")	522 (20 9/16")	433.19.386	433.19.396
533 (21")	555 (21 27/32")	598 (23 17/32")	433.19.388	433.19.398

Note
All items require R/L Plastic front locking device, see page **8.69**.

Flat head screws	pages 12.7-12.8, 12.10, 12.13
Varianta screws	page 12.16
Locking device	page 8.69

Dimensional data not binding. Dimensions in mm, inches are approximate. We reserve the right to alter specifications without notice.

This page is left blank intentionally.

Dimensional data not binding. Dimensions in mm, inches are approximate. We reserve the right to alter specifications without notice.

Grass Full Extension - Heavy Duty 3D

→ Dynapro 16 3D

- > Dynamic weight capacity: 60 kg (132 lbs.); extended lengths: 58 kg (100 lbs.)
- > Frameless application
- > Integrated soft close air damping provides the lowest possible resistance when opening
- > Clip features: Side to side, height and tilt adjustment* for perfect drawer alignment
  - Tool-less integrated height adjustment +3.5 mm (9/64")
  - Tool-less adjustment adapter for side adjustment ±1.5 mm (1/16"), and tilt adjustment +4 mm (5/32")
- > Fully synchronized runner for the ultimate in smooth silent operation
- > Continuous self-locking of drawer when pushed onto the drawer
- > Material: Steel; Finish: zinc-plated

soft&silent

Note
Requires R/L front locking device; 3-D version also requires R/L rear adjustment adapter, see page **8.70**.

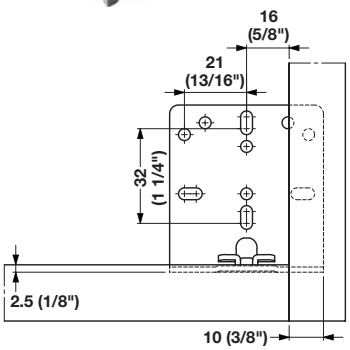

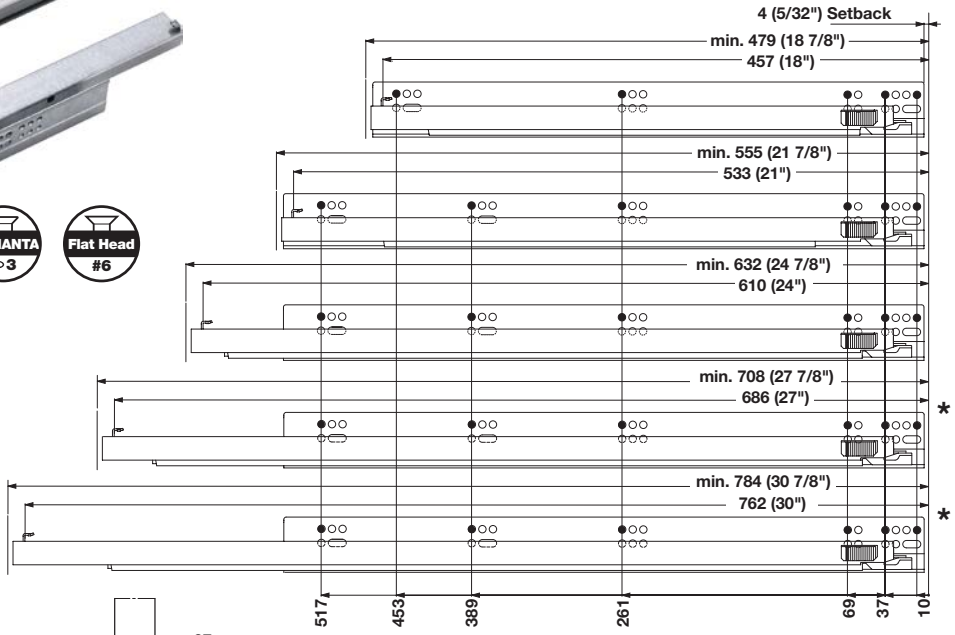

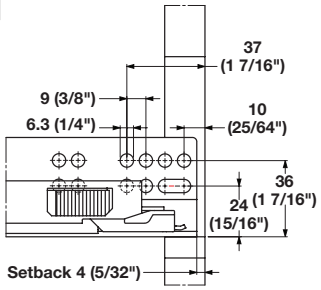

Inside drawer width = Inside cabinet width - 42 mm (1 21/32") +0, -1.5

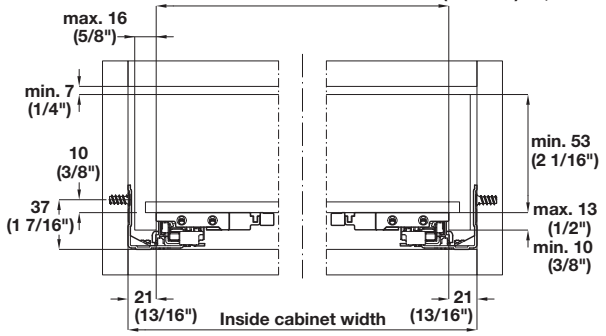

Drawer length	Min. installation depth	Item No.
457 (18")	479 (18 7/8")	433.20.448
533 (21")	555 (21 7/8")	433.20.456
610 (24")	632 (24 7/8")	433.20.464
*686 (27")	708 (27 7/8")	433.20.471
*762 (30")	784 (30 7/8")	433.20.479

*Extended lengths weight capacity: 50 kg (100 lbs.)

Flat head screws	pages 12.7-12.8, 12.10, 12.13
Varianta screws	page 12.16
Locking devices and rear adjustment bracket	pages 8.69-8.70

Dimensional data not binding. Dimensions in mm, inches are approximate. We reserve the right to alter specifications without notice.

Grass Full Extension

→ Dynapro 16 Tipmatic

- > Weight capacity: 40 kg (88 lbs.)
- > Drawer width: max. 660 mm (26")
- > Face frame or frameless application
- > Integrated Tipmatic mechanism provides push-to-open and push-to-close functionality
- > Clip features: Side to side, height and tilt adjustment for perfect drawer alignment
  - Tool-less integrated height adjustment +3.5 mm (9/64")
  - Tool-less adjustment adapter for side adjustment ±1.5 mm (1/16")
- > Fully synchronized runner for the ultimate in smooth silent operation
- > Continuous self-locking of drawer when pushed onto the drawer
- > Meets or exceeds BHMA Grade 1 testing requirements
- > Material: Steel; Finish: zinc-plated

Note
Requires R/L front locking device, see page **8.69**.

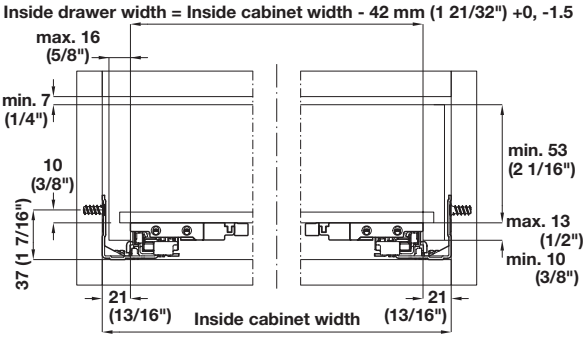

Drawer Length	Min. installation depth	Max. installation depth	Item No.
381 (15")	403 (15 7/8")	446 (17 9/16")	433.19.905
457 (18")	479 (18 27/32")	522 (20 9/16")	433.19.908
533 (21")	555 (21 27/32")	598 (23 17/32")	433.19.911

Rear socket for 12" – 21" slides

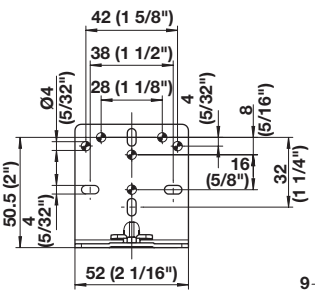

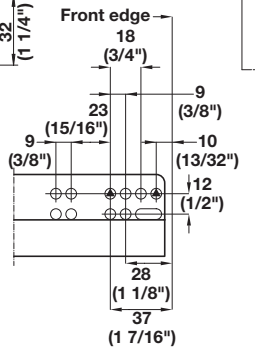

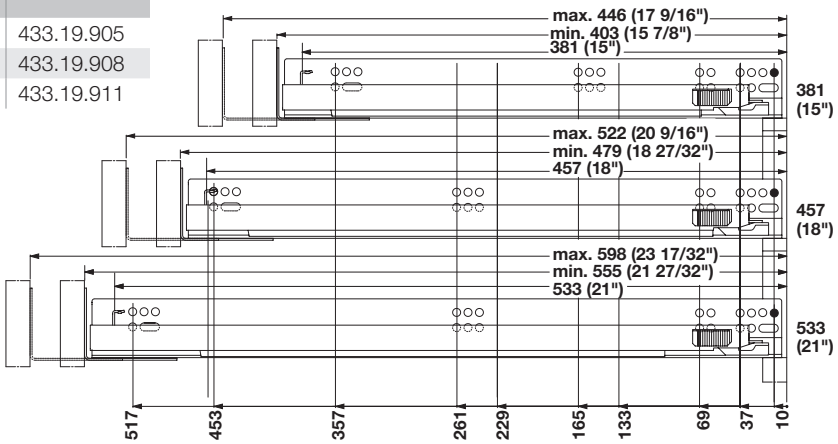

Pan head screws	pages 12.7-12.8, 12.10, 12.13
Varianta screws	page 12.16
Locking devices	page 8.69

Dimensional data not binding. Dimensions in mm, inches are approximate. We reserve the right to alter specifications without notice.

Grass Full Extension - Base/Bottom Panel Mounted

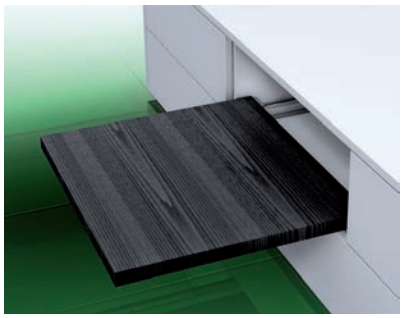

> Weight capacity: 40 kg (88 lbs.)
> Face frame and frameless applications
> Provides an application for pull-out shelves on its own or as inset drawer
> A great solution for kitchens, closets, and laundry areas with limited counter space and drawer storage
> + 3.5 mm height adjustment for the front locking device
> Rear back brackets included with front locking device set

→ Dynapro Base Panel Mount

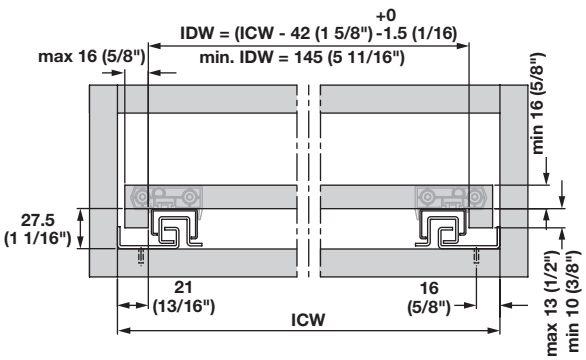

> Material: Steel; Finish: zinc-plated

Length	Item No.
450 (18")	433.19.624
500 (20")	433.19.625
550 (22")	433.19.626

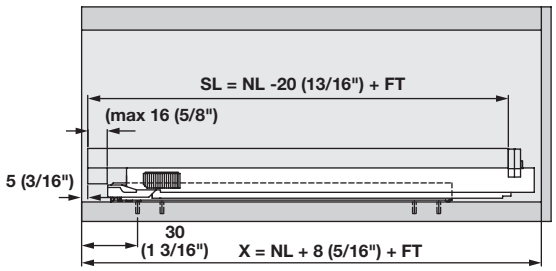

Front Locking Device Installation

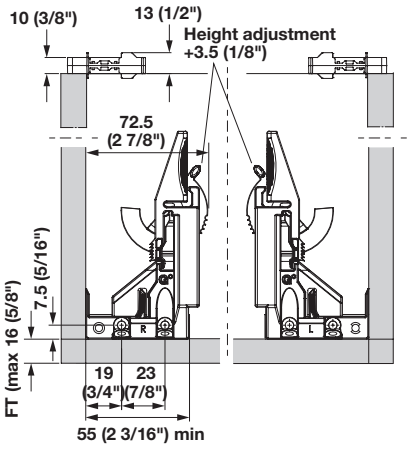

Shelf Holder Installation

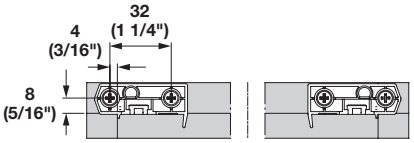

FT = front thickness
ICW = inside cabinet width
IDW = inside drawer width
NL = nominal length
SL = shelf length
X = minimum installation depth

→ 1D Front Locking Device & Shelf Holder Set

> Material: Plastic

Color	Item No.
gray	433.19.066

Dimensional data not binding. Dimensions in mm, inches are approximate. We reserve the right to alter specifications without notice.

This page is left blank intentionally.

Dimensional data not binding. Dimensions in mm, inches are approximate. We reserve the right to alter specifications without notice.

Grass Full Extension

→ Dynapro 19 3-D

- > Dynamic weight capacity: 45 kg (100 lbs.)
- > Drawer width: max. 1219 mm (48")
- > For 19 mm (3/4") drawer box
- > Face frame or frameless application
- > Integrated soft close liquid damping provides sleek, smooth closing
- > Clip features: Side to side, height, depth and tilt adjustment for perfect drawer alignment
  - Tool-less integrated height adjustment +3.5 mm (9/64")
  - Tool-less adjustment adapter for side adjustment ±1.5 mm (1/16") and depth adjustment +3 mm (1/8")
- > Fully synchronized runner for the ultimate in smooth silent operation
- > Continuous self-locking of drawer when pushed onto the drawer
- > 3-D version* adds tilt adjustment +4 mm (5/32")
- > Meets or exceeds BHMA Grade 1 testing requirements
- > Material: Steel; Finish: zinc-plated

soft&silent

Note
Requires R/L front locking device and R/L rear adjustment adapter, see pages **8.69-8.70**.

Drawer length	Min. installation depth	Max. installation depth	Item No.
229 (9")	273 (10 3/4")	352 (13 7/8")	433.19.525
305 (12")	327 (12 7/8")	370 (14 9/16")	433.19.533
381 (15")	403 (15 7/8")	446 (17 9/16")	433.19.541
457 (18")	479 (18 27/32")	522 (20 9/16")	433.19.548
533 (21")	555 (21 27/32")	598 (23 17/32")	433.19.556

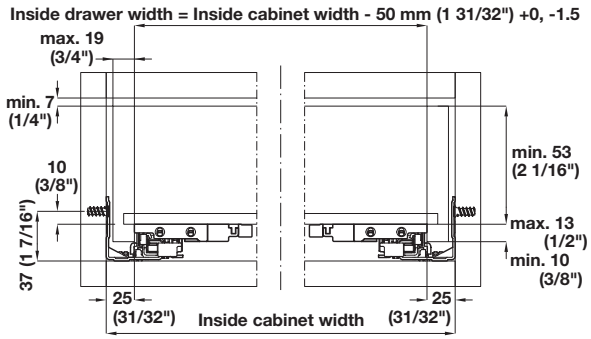

Pan head screws	pages 12.7-12.8, 12.10, 12.13
Varianta screws	page 12.16

Dimensional data not binding. Dimensions in mm, inches are approximate. We reserve the right to alter specifications without notice.

Grass Full Extension

→ Dynapro 2.0 19

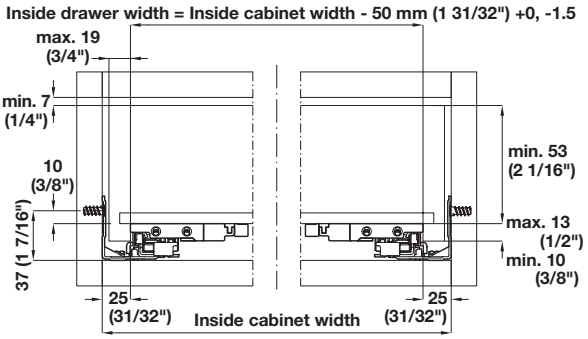

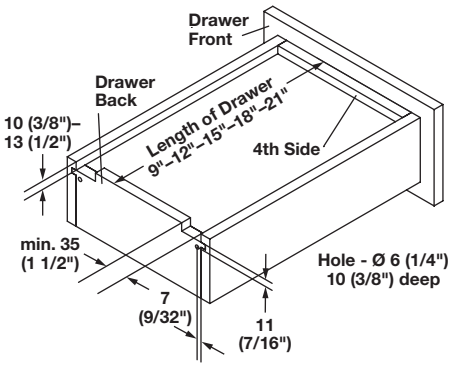

> Dynamic weight capacity: 40 kg (90 lbs.)
> For drawers up to 48" wide
> Face frame or frameless application
> Integrated soft close liquid damping provides sleek, smooth closing
> Fully synchronized runner for the ultimate in smooth silent operation
> Continuous self-locking of drawer when pushed onto the drawer
> Clip features: Side to side, height, depth and tilt adjustment for perfect drawer alignment
  - Tool-less integrated height adjustment +3.5 mm (9/64")
  - Tool-less adjustment adapter for side adjustment ±1.5 mm (1/16") and depth adjustment +3 mm (1/8")
> Meets or exceeds BHMA Grade 1 testing requirements
> For 12.7–19 mm (1/2"–3/4") drawer box
> Material: Steel; Finish: zinc-plated

Drawer length	Min. installation depth	Max. installation depth	Item No.
229 (9")	273 (10 3/4")	352 (13 7/8")	433.19.770
305 (12")	327 (12 7/8")	370 (14 9/16")	433.19.772
381 (15")	403 (15 7/8")	446 (17 9/16")	433.19.774
457 (18")	479 (18 27/32")	522 (20 9/16")	433.19.776
533 (21")	555 (21 27/32")	598 (23 17/32")	433.19.778

Note
All items require R/L Plastic front locking device, see page **8.69**.

Flat head screws	pages 12.7-12.8, 12.10, 12.13
Varianta screws	page 12.16
Locking device	page 8.69

Dimensional data not binding. Dimensions in mm, inches are approximate. We reserve the right to alter specifications without notice.

This page is left blank intentionally.

Dimensional data not binding. Dimensions in mm, inches are approximate. We reserve the right to alter specifications without notice.

Grass Full Extension - Heavy Duty 3D

→ Dynapro 19 3D

- > Weight capacity: 68 kg (150 lbs.); extended lengths: 57 kg (125 lbs.)*
- > Frameless application
- > Integrated soft close liquid damping provides sleek, smooth closing
- > Clip features: Side to side, height, depth and tilt adjustment for perfect drawer alignment
  - Tool-less integrated height adjustment +3.5 mm (9/64")
  - Tool-less adjustment adapter for side adjustment ±1.5 mm (1/16"), tilt adjustment +4 mm (5/32") and depth adjustment +3 mm (1/8")
- > Fully synchronized runner for the ultimate in smooth silent operation
- > Continuous self-locking of drawer when pushed onto the drawer
- > For 19 mm (3/4") drawer box
- > Material: Steel; Finish: zinc-plated

soft&silent

Note
Requires R/L front locking device and R/L rear adjustment adapter, see pages **8.67-8.68**.

Drawer length	Min. installation depth	Item No.
457 (18")	479 (18 7/8")	433.20.548
533 (21")	555 (21 7/8")	433.20.556
610 (24")	632 (24 7/8")	433.20.564
*686 (27")	708 (27 7/8")	433.20.571
*762 (30")	784 (30 7/8")	433.20.579

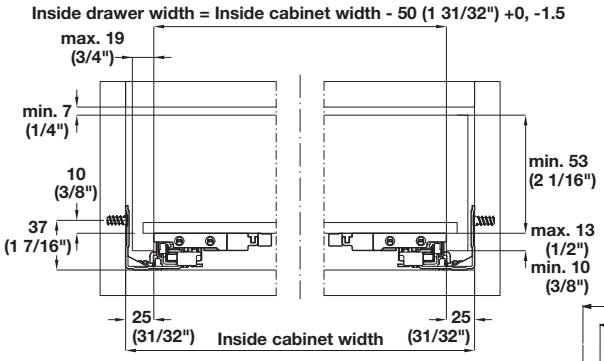

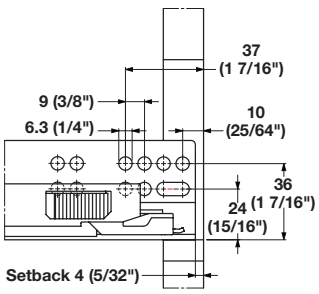

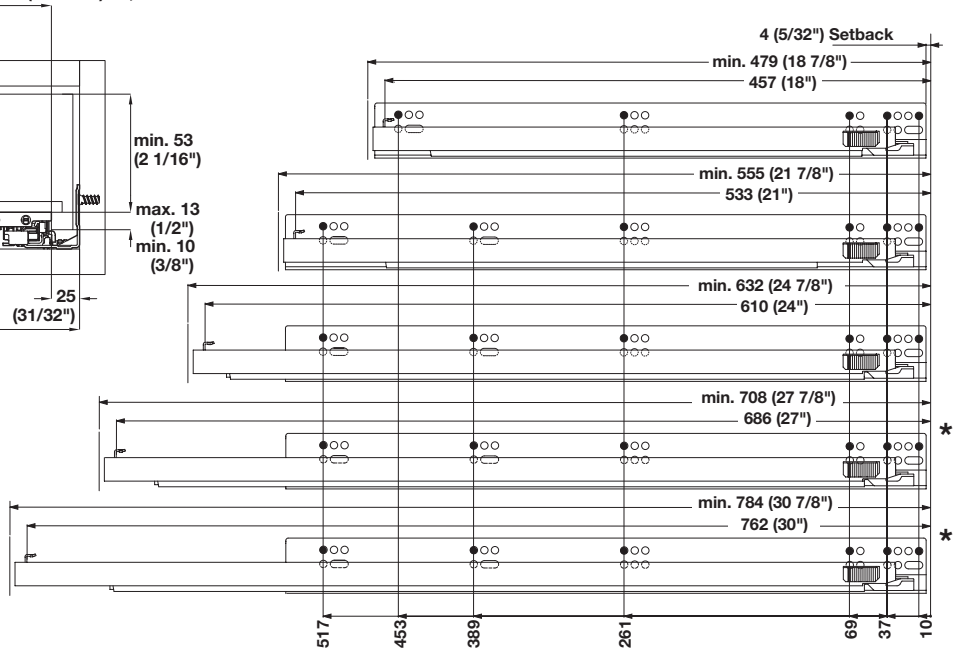

*57 kg (125 lbs.) weight capacity for extended lengths

Flat head screws	pages 12.7-12.8, 12.10, 12.13
Varianta screws	page 12.16

Dimensional data not binding. Dimensions in mm, inches are approximate. We reserve the right to alter specifications without notice.

Grass Dynapro

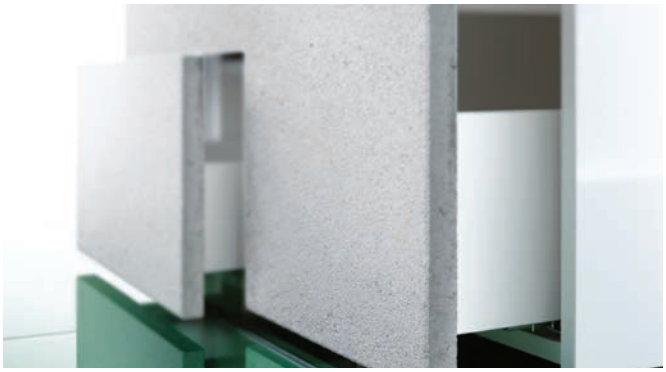

> Face frame or frameless applications for 12.7, 16 and 19 mm (1/2", 5/8" and 3/4") drawer material
> Mechanical opening system for handle-free fronts
> Combines Tipmatic (push-to-open) function with soft close damping
> Tool-free assembly for drawers from 305–1168 mm (12"–46")
> 3 tier adjustment for the opening force
> Cut to desired length
> Notching of back of drawer should be increased from 35–44 mm (1 3/8"–1 3/4")
> Length: 953 mm (37 1/2")

Note
Tipmatic Soft Close cannot be used with 229 mm (9") slides.
Must order Dynapro runner separately.

→ Dynapro Tipmatic Soft Close Kit

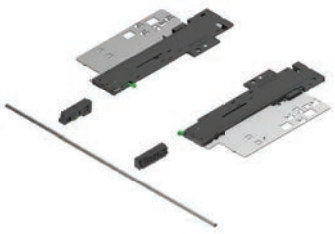

Description	Item No.
Tipmatic soft close	433.19.080
Synchronization bar	433.19.086

Supplied With
10 sets/pcs.

For Installation with 16 mm (5/8") material

Inside drawer width = Inside cabinet width - 42 (1 21/32") (Tolerance +0/-1.5)

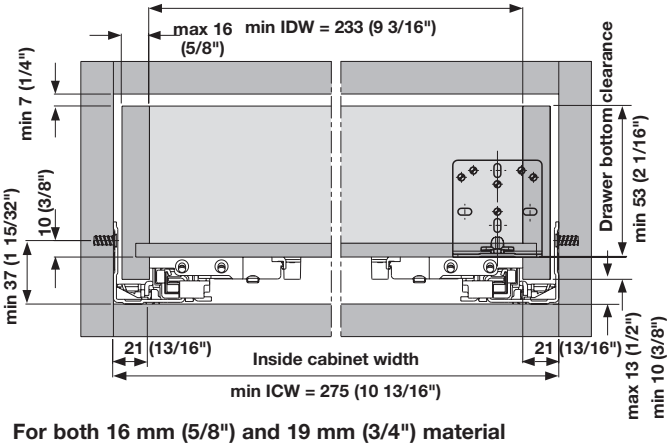

For Installation with 19 mm (3/4") material

Inside drawer width = Inside cabinet width - 50 mm (1 31/32") (Tolerance +0/-1.5)

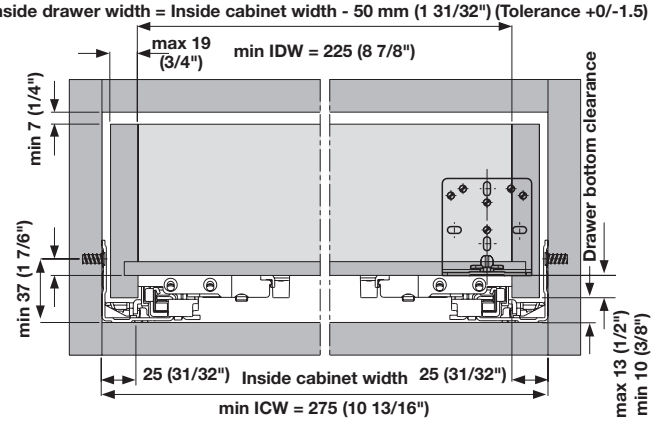

For both 16 mm (5/8") and 19 mm (3/4") material

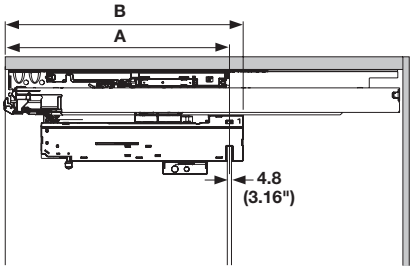

Drawer Length	A	B
305 (12")	261 (10 9/32")	278 (10 15/16")
381-762 (30")	296 (11 21/32")	313 (12 5/16")

Installation of Synchronization Bar
> Bar needs to be cut properly
> Cut inside cabinet width minus 216 mm (8 1/2") for 16 mm (5/8") drawer material and 210 mm (8 9/32") for 19 mm (3/4") material
> Install last prior to drawer

For installation with 16 mm (5/8") material

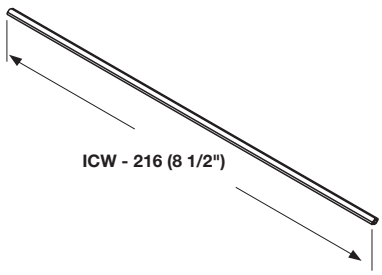

For installation with 19 mm (3/4") material

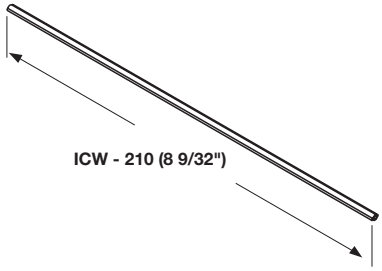

Dimensional data not binding. Dimensions in mm, inches are approximate. We reserve the right to alter specifications without notice.

Grass Dynapro Accessories

> Front locking device required on all drawers, select from below
> Rear adjustment adapters required only on 3D
> Material: Steel; Finish: zinc-plated

→ Front Locking Devices

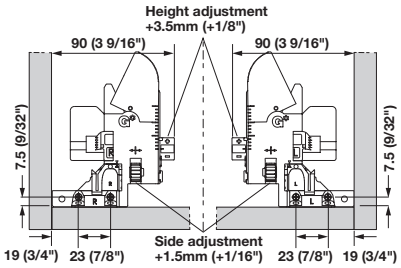

> 2D version
> For standard drawers
> Minimum inside drawer width: 180 mm (7 3/32")
> Pre-drilling recommended

Handing	Bulk	Pairs
Left	433.19.043	433.19.036
Right	433.19.044	

Bulk Supplied With
200 pairs

→ Narrow Front Locking Devices

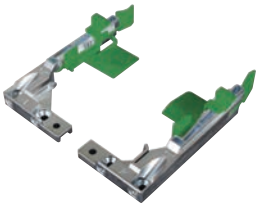

> 1D version
> For narrow drawers
> Minimum inside drawer width: 95 mm (3 3/4")
> Pre-drilling recommended

Handing	Bulk	Pairs
Left	433.23.002	433.23.011
Right	433.23.001	

Bulk Supplied With
200 pairs

→ Front Locking Devices

3D with flange

2D with flange

2D

> Minimum inside drawer width: 150 mm (5 7/8")
> For drawer materials: 13–19 mm (1/2"–3/4")
> Lightweight, high strength material
> All adjustments can be made without tools
> 3D device provides height, side and depth adjustment
> 2D provides height and side adjustment
> Material: Plastic; Finish: black

Version	Handing	Bulk	Pairs
3D with flange	left	433.19.015	433.19.027
3D with flange	right	433.19.014	
3D	left	433.19.107	433.19.035
3D	right	433.19.106	
2D with flange	left	433.19.013	433.19.026
2D with flange	right	433.19.012	
2D	left	433.19.033	433.19.028
2D	right	433.19.034	

Bulk Supplied With
200 pairs

Flanged

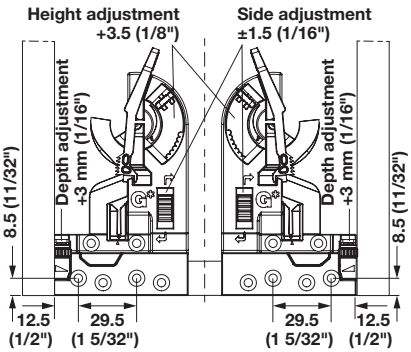

Non-Flanged

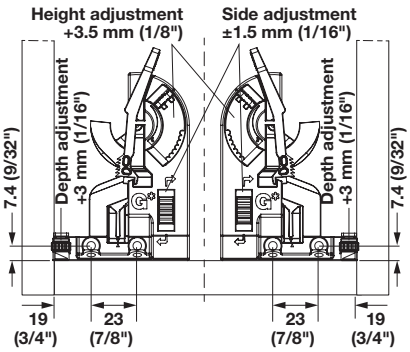

Dimensional data not binding. Dimensions in mm, inches are approximate. We reserve the right to alter specifications without notice.

Grass Dynapro Accessories

→ Rear Adjustment Adapters, required for 3D

Fixing position of adjustment adapter

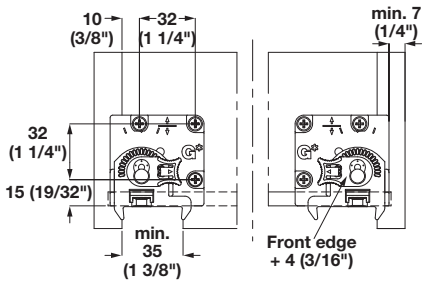

> Provides tilt adjustment +4 mm (5/32")
> Material: Plastic; Color: gray

Handing	Bulk	Pairs
Left	433.19.041	433.19.029
Right	433.19.042	

Bulk Supplied With
200 pairs

→ Dynapro Tipmatic Piston

> Replace the existing soft close mechanism with the Tipmatic piston to convert the slide to a PUSH function
> L x W x D: 178 x 20 x 5 mm (7" x 13/16" x 3/16")
> Material: Plastic; Color: gray

Slide length	Handing	Item No.
228–305 (9"–12")	left	433.19.063
	right	433.19.062
381–533 (15"–21")	left	433.19.061
	right	433.19.060

→ Drawer Drilling Template

> Material: Plastic

Color	Item No.
green	433.19.010

→ Rear Mounting Socket

> Non-handed
> For 305–533 mm (12"–21") slides
> Material: Steel; Finish: zinc-plated

Version	Item No.
Standard	433.19.051
Narrow	433.19.057

→ Rear Mounting Socket

> Non-handed
> For 228 mm (9") slides
> Installation depth min. 273–352 mm (10 3/4"–13 7/8")
> Material: Steel

Finish	Item No.
zinc-plated	433.19.052

Supplied With
Left socket, right socket, 4 M5 x 8 screws

→ Dynapro Depth Adjuster

> For heavy duty and extended lengths
> Provides +4.5 mm (3/16") forward adjustment
> Use with zinc clips
> Material: Plastic

Color	Item No.
gray	433.19.047

Supplied With
5 left, 5 right

Dimensional data not binding. Dimensions in mm, inches are approximate. We reserve the right to alter specifications without notice.

Grass Full Extension

> Weight capacity: 34 kg (75 lbs.)
> Maximum drawer thickness: 16 mm (5/8")
> Face frame or frameless application
> Integrated liquid damper
> Exceeds ANSI/BHMA Grade 1 testing
> Multiple cleats for optimal security of front locking clip
> Oblong mounting hole option provides 4 mm (3/16") depth adjustment
> Material: Steel; Finish: zinc-plated

Note
Front locking device is required, see page **8.73**.

→ Elite Plus 16

Drawer length	Internal cabinet depth minimum*	Internal cabinet depth maximum	Item No.	Bulk Item No.
240 (9 7/16")	259 (10 3/16")	296 (11 5/8")	433.25.110	-
305 (12")	329 (12 15/16")	363 (14 5/16")	433.25.111	-
381 (15")	407 (16")	440 (17 5/16")	433.25.112	433.25.122
457 (18")	479 (18 7/8")	516 (20 5/16")	433.25.113	433.25.123
533 (21")	562 (22 1/8)	596 (23 7/16")	433.25.114	433.25.124

Bulk Supplied With 200 pcs.

Note
Front locking device required, see page **8.73**
*For frameless applications, deduct 1.5 mm (1/16") for minimum internal cabinet depth.

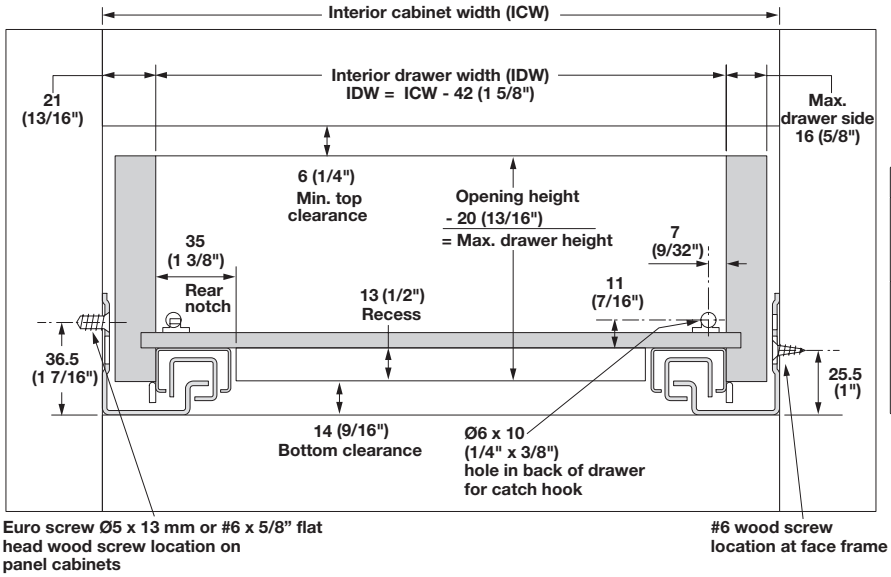

Calculations outside drawer width					
Drawer side thickness	16 (5/8")	15 (19/32")	14 (9/16")	13 (1/2")	12 (15/32")
Deduct from interior cabinet width	10 (3/8")	12 (15/32")	14 (9/16")	16 (5/8")	18 (23/32")

Dimensional data not binding. Dimensions in mm, inches are approximate. We reserve the right to alter specifications without notice.

Grass Full Extension

> Weight capacity: 34 kg (75 lbs.)
> Maximum drawer thickness: 19 mm (3/4")
> Face frame or frameless application
> Integrated liquid damper
> Exceeds ANSI/BHMA Grade 1 testing
> Multiple cleats for optimal security of front locking clip
> Oblong mounting hole option provides 4 mm (3/16") depth adjustment
> Material: Steel; Finish: zinc-plated

→ Elite Plus 19

Drawer length	Internal cabinet depth minimum*	Internal cabinet depth maximum	Item No.
381 (15")	407 (16")	440 (17 5/16")	433.25.132
457 (18")	379 (18 7/8")	516 (20 5/16")	433.25.133
533 (21")	562 (22 1/8")	596 (23 7/16")	433.25.134

Note
Front locking device required, see page **8.73**.
*For frameless applications, deduct 1.5 mm (1/16") for minimum internal cabinet depth. Both applications require R/L front locking device, see page **8.73**.

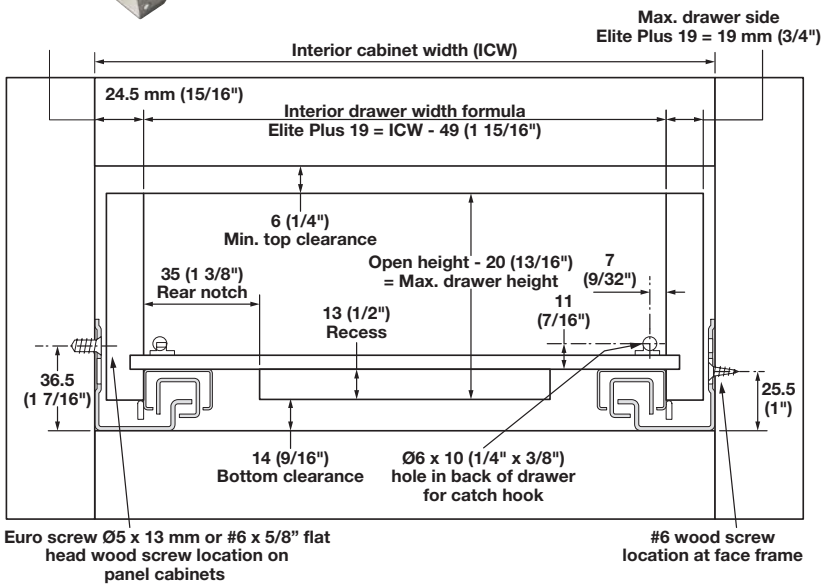

Calculations outside drawer width					
Drawer side thickness	19 (3/4")	18 (23/32")	17 (21/32")	16 (5/8")	15 (19/32")
Deduct from ICW	11 (7/16")	13 (1/2")	15 (19/32")	17 (21/32")	19 (3/4")

Dimensional data not binding. Dimensions in mm, inches are approximate. We reserve the right to alter specifications without notice.

Grass Elite Plus Accessories

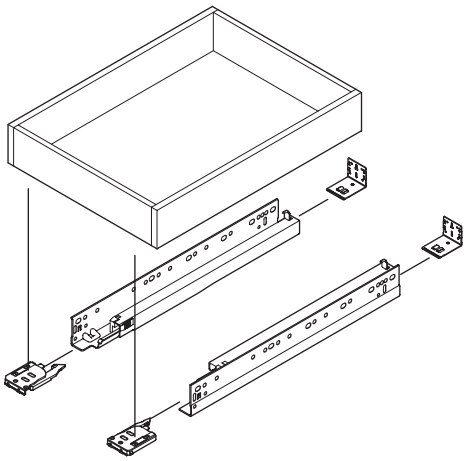

> Choose from required front locking devices

→ 2D Adjustable Front Locking Device, required

> +/- 1.5 mm (1/16") side
> +/- 2.5 mm (1/8") height
> Material: Plastic

Version	Handing	Pairs	Bulk
Without flange	right	433.30.008	433.30.004
Without flange	left		433.30.005
With flange	right	433.30.011	433.30.009
With flange	left		433.30.010

Bulk Supplied With
200 pairs

→ 1D Front Locking Device, required

> Material: Plastic

Version	Handing	Pairs	Bulk
Without flange	right	433.30.006	433.30.000
Without flange	left		433.30.001
With flange	right	433.30.007	433.30.002
With flange	left		433.30.003

Bulk Supplied With
200 pairs

→ Rear Mounting Bracket, optional

Rear Bracket Position

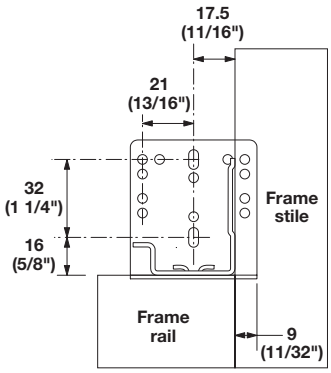

For face frame applications only. Use minimum of 3 screws per bracket, #6 x 1/2" truss head screws

> For use in face frame applications
> Material: Steel

Finish	Item No.
zinc-plated	433.19.051

→ Drilling Template

> For use with a standard 6 mm (1/4") drill bit and stop collar

	Item No.
	433.25.996

Flat head screws pages 12.7-12.8, 12.10, 12.13

Dimensional data not binding. Dimensions in mm, inches are approximate. We reserve the right to alter specifications without notice.

Grass Sensomatic Drawer Opener

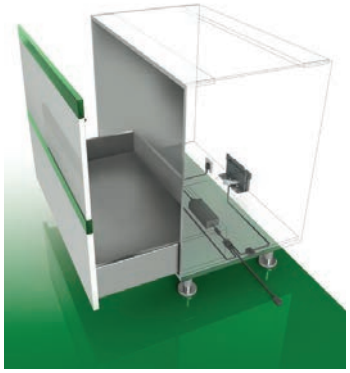

Handle-free opening with soft close
With the Sensomatic device that works in conjunction with the Dynapro Drawer System, all you need is a gentle touch anywhere on the front of the drawer to automatically open the drawers. The opening action is steady, precise and ingenious. Sensomatic is extremely efficient in regard to power consumption and occupied space requiring only one drive unit for cabinet widths up to 1200 mm (47 1/4"), regardless of weight.

Accessories such as wire baskets, waste bins, or roll-out trays can be fitted without modification to the Sensomatic System.

Sensomatic with soft close offers all the advantages of handle-free opening with the elegance and functionality of soft closing action, guaranteeing your operating convenience at the highest level.

> Use with: Dynapro, Vionaro, Nova Pro Scala, Trash Bins, Matrix Box P50, Pull-outs

Note
See components on next page.

Overview

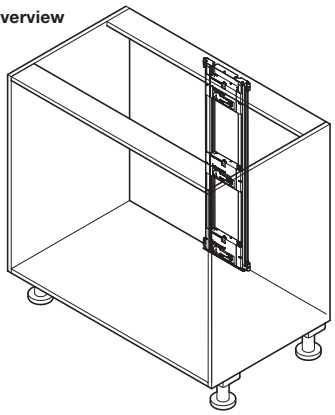

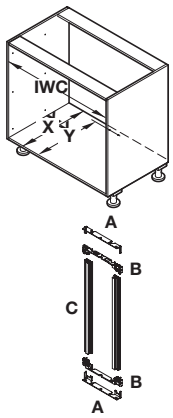

X = min. installation depth
Y = depth of hole pattern
KW = internal width of cabinet

A = Frame set top/bottom
B = Frame connector
C = Frame sides

Fixing brackets top/bottom

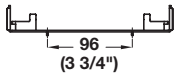

Positioning aid

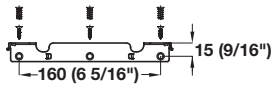

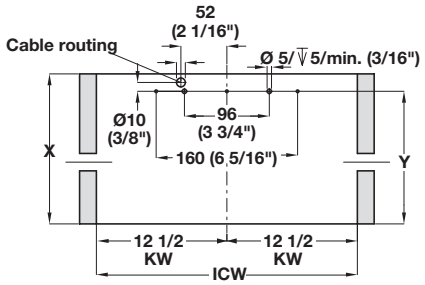

Mounting dimensions Dynapro	X	Y
Wood back panel	NL + 15 (9/16")	NL

Position of opening unit Dynapro

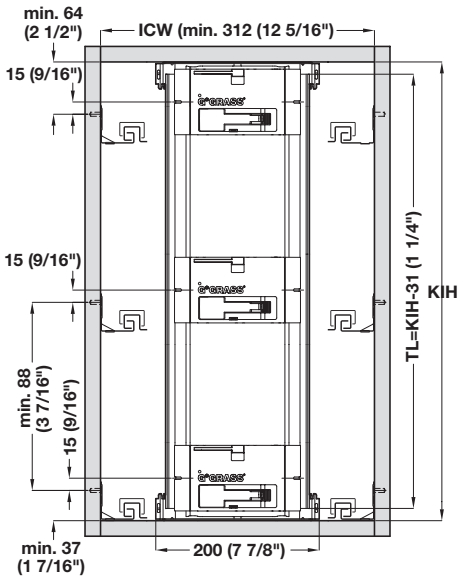

KIH = internal height of cabinet
TL = length of frame side
ICW = internal width of cabinet

Dimensional data not binding. Dimensions in mm, inches are approximate. We reserve the right to alter specifications without notice.

Grass Sensomatic Drawer Opener

> An electrical outlet is required
> Disconnect the power before installing or removing the system
> For cabinet widths 1200 mm (47 1/4") and over it is recommended to use 2 opening units, which can be activated simultaneously with the the connection cable
> It is possible to operate 30 openings with each power supply unit

→ Opening Unit

> Power supply: 110 V
> Power frequency: 50 to 60 Hz
> Max. power output: 230 W
> Opening unit supply voltage: 24 V
> Operating conditions temperature: 32° to 120° F
> Humidity: 15% to 90% non-condensing
> Material: Plastic

Color	Item No.
gray	553.00.300

Note
Do not insert screws in the area of the opening lever.
Use only in dry, closed rooms.

→ Mounting Bracket

> Material: Steel

	Item No.
	553.00.325

→ Power Supply

> Input: 100-240V
> 50-60 HZ
> Output: 24 VDC
> Max.: 120W
> Material: Plastic

Color	Item No.
black	553.00.330

→ Power Cord

> With US plug
> Length: 1.8 m (70 7/8")
> Material: Plastic

Color	Item No.
black	553.00.161

→ Frame Connector

> Material: Steel

	Item No.
	553.00.320

→ Frame Sides

> 653 mm (25 45/64") for cabinets up to 720 mm (28 11/32")
> Length: 750 mm (29 1/2")
> Material: Aluminum

	Item No.
	553.00.311

Supplied With
Cable

→ Connection Cable

> With 2-way adapter
> Material: Plastic; Color: black

Length	Item No.
1000 (39 3/8")	553.00.341
2000 (78 3/4")	553.00.343

→ Front Bumper

> Spring-loaded
> 2.2 mm (1/16") front gap
> Ø:5 mm (3/16")
> Max.: 120W
> Material: Plastic

Color	Item No.
gray	553.00.390

→ Electronic Waste Bin Auto Open Kit

> Surface mounts to the cabinet floor
> For 1 drawer

	Item No.
	553.00.430

Dimensional data not binding. Dimensions in mm, inches are approximate. We reserve the right to alter specifications without notice.

Full Extension

→ Side Mounted

soft&silent

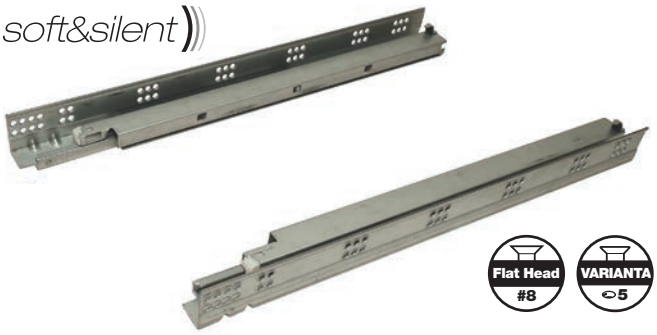

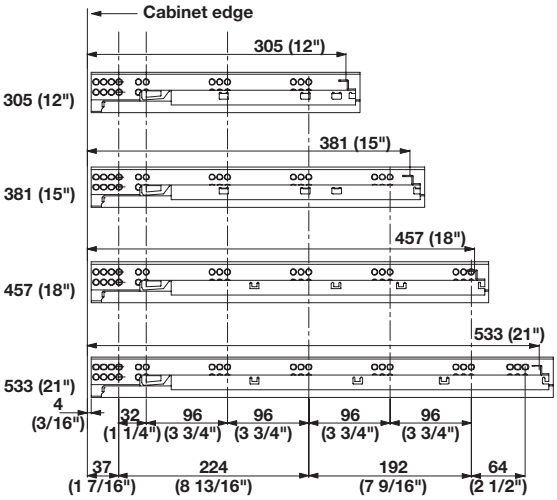

> Weight capacity: 35 kg (75 lbs.)/pair
> For drawer material:13–16 mm (1/2"–5/8") or 19 mm (3/4")
> Integrated soft close mechanism
> Rear face frame mounting bracket available
> BHMA grade 1 tested
> Material: Steel, galvanized

Length	16 mm	19 mm
305 (12")	433.10.381	433.10.481
381 (15")	433.10.383	433.10.483
457 (18")	433.10.385	433.10.485
533 (21")	433.10.387	433.10.487

Formula for calculating drawer width

Installation for drawer with max 16 mm (5/8") thick drawer side
LW = Internal cabinet width SKW = Internal drawer width

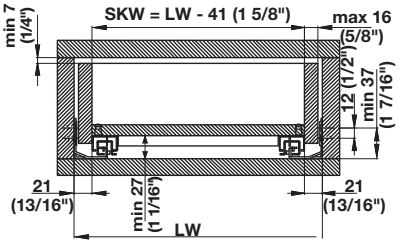

Installation for drawer with max 19 mm (3/4") thick drawer side
LW = Internal cabinet width SKW = Internal drawer width

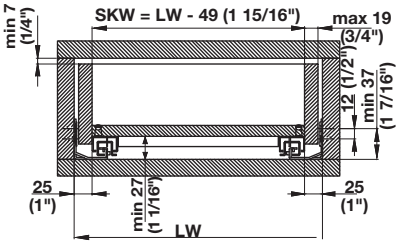

→ Front Locking Clips

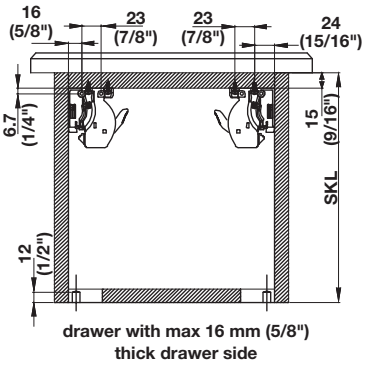

drawer with max 16 mm (5/8") thick drawer side

> Height adjustment: 0 - +3 mm (1/8")
> Side adjustment: ±1.5 mm (1/16")
> Depth adjustment: 0 - +3 mm (1/8")
> Material: Plastic; Color: gray

Version	Item No.
2D	433.10.026
3D	433.10.027

→ Face Frame Mounting Brackets

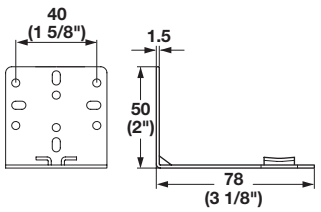

> Material: Steel

Finish	Item No.
zinc-plated	421.38.010

Flat head screws	pages 12.7-12.8, 12.10, 12.13
Varianta screws	page 12.16

Dimensional data not binding. Dimensions in mm, inches are approximate. We reserve the right to alter specifications without notice.

Häfele Matrix UM A35

→ Full Extension

soft&silent

Flat Head #8

VARIANTA 5

> Weight capacity: 35 kg (75 lbs.)/pair
> For drawer material: 13–16 mm (1/2"–5/8")
> Integrated soft close mechanism
> Rear face frame mounting bracket available
> Material: Steel, galvanized

Length	16 mm (5/8")	19 mm (3/4")
305 (12")	433.32.801	433.32.851
381 (15")	433.32.803	433.32.853
457 (18")	433.32.805	433.32.855
533 (21")	433.32.807	433.32.857

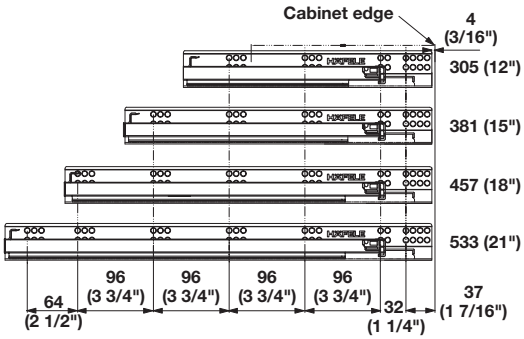

Calculation of the internal drawer space dimensions

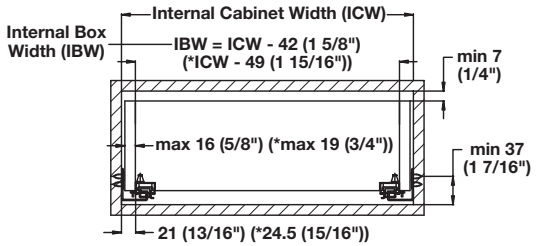

The asterisk number is the installation size of 19 mm (3/4") thickness drawer slide

→ Front Locking Clips, required

2D

3D

Installation reference to notch and drill

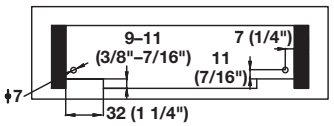

> Height adjustment: 0 - +3 mm (1/8")
> Side adjustment: ±1.5 mm (1/16")
> Depth adjustment: 0 - +3 mm (1/8")
> Material: Plastic; Color: gray

Version	Item No.
2D	433.32.990
3D	433.32.991

→ Face Frame Mounting Brackets, optional

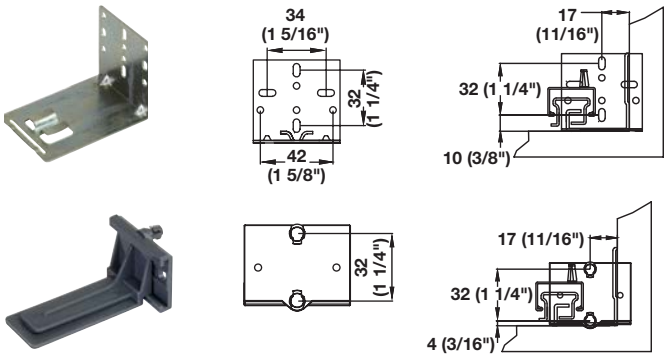

Material	Item No.
Steel	433.32.992
Plastic	433.32.993

Flat head screws	pages 12.7-12.8, 12.10, 12.13
Varianta screws	page 12.16

Dimensional data not binding. Dimensions in mm, inches are approximate. We reserve the right to alter specifications without notice.

This page is left blank intentionally.

Dimensional data not binding. Dimensions in mm, inches are approximate. We reserve the right to alter specifications without notice.

Closet Slides

→ Full Extension

- > Weight capacity: 35 kg (75 lbs.)/pair
- > For drawer material: from 13–16 mm (1/2"–5/8")
- > For frameless cabinets
- > With integrated soft close
- > Front fixing clips with 3D adjustment
- > Material: Steel, galvanized

Slide length	Drawer length	Minimum inside cabinet depth	Item No.
340 (13 3/8")	330 (13")	355 (14")	433.03.081
391 (15 3/8")	381 (15")	406 (16")	433.03.084
450 (17 3/4")	440 (17 3/8")	465 (18 3/8")	433.03.087
467 (18 3/8")	457 (18")	482 (19")	433.03.088
543 (21 3/8")	533 (21")	558 (22")	433.03.096

Supplied With
10 pairs with front fixing clips

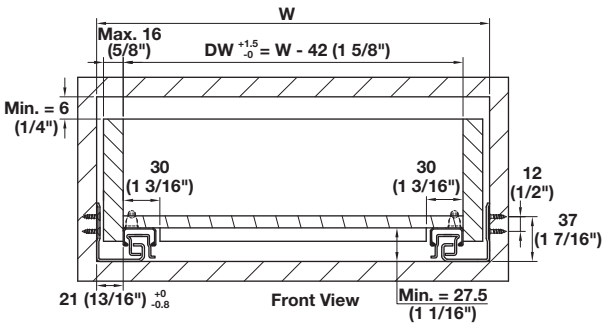

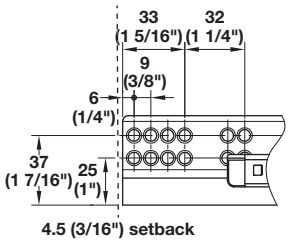

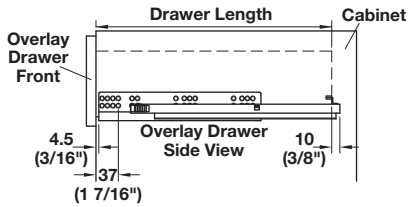

Dimensional data not binding. Dimensions in mm, inches are approximate. We reserve the right to alter specifications without notice.

Accuride Eclipse

→ 3135EC

> Dynamic weight capacity: 45.5 kg (100 lbs.)
> Commercial grade
> Easy close mechanism consistently brings drawers to a gentle close
> Fluid damper resists slam without adding bounce back
> Lower spacer clip reduces migration and side to side movement
> Meets ADA requirements with 4.8 lbs. of pull force
> For drawers up to 914 mm (30") wide
> 3 mm (1/8") vertical, horizontal and depth adjustment
> Frameless or face frame with back bracket
> Material: Steel; Finish: bright electro-zinc

Length	D pack	P pack
305 (12")	433.29.001	433.29.021
356 (14")	433.29.002	433.29.022
381 (15")	433.29.003	433.29.023
406 (16")	433.29.004	433.29.024
457 (18")	433.29.005	433.29.025
508 (20")	433.29.006	433.29.026
533 (21")	433.29.007	433.29.027
559 (22")	433.29.008	433.29.028
610 (24")	433.29.009	433.29.029
660 (26")	433.29.010	433.29.030
711 (28")	433.29.011	433.29.031

Supplied With
D Pack: 1 pair
Screws
Disconnect levers
Mounting instructions
P Pack: 12"–24": 6 pairs
26"–28": 4 pairs
Disconnect levers and screws sold separately

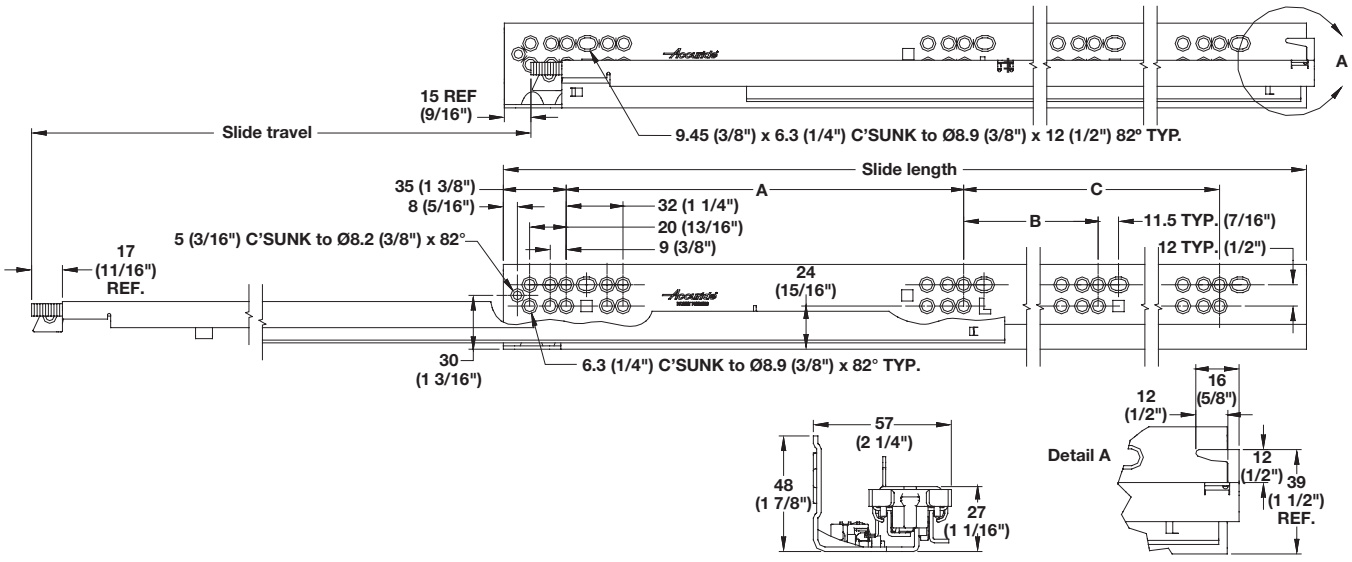

Dimensional data not binding. Dimensions in mm, inches are approximate. We reserve the right to alter specifications without notice.

Accuride Eclipse Accessories

Drawer side thickness	16 (5/8")	15 (19/32")	14 (9/16")	13 (1/2")
For outside drawer width (deduct from inside cabinet width)	13 (1/2")	14 (9/16")	16 (5/8")	19 (3/4")
For inside drawer width (deduct from inside cabinet width)	44.5 (1 3/4")			

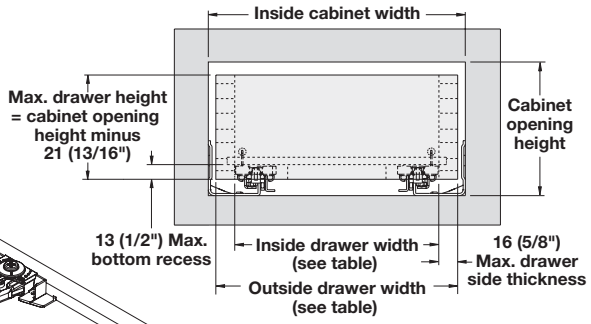

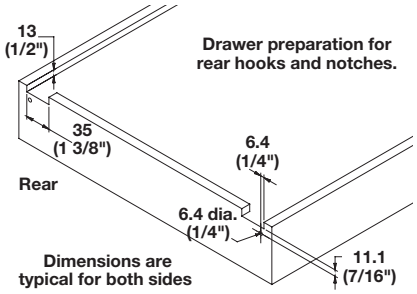

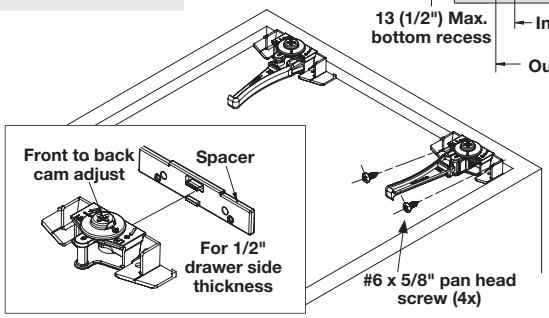

→ Front Inset Face Frame Bracket

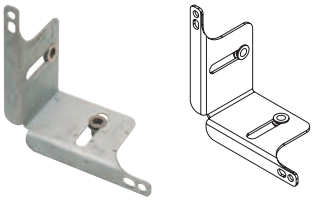

> Material: Steel

Finish	Item No.
zinc-plated	420.01.020

Supplied With
2 brackets
4 #8 screws

→ Bottom Mount Bracket

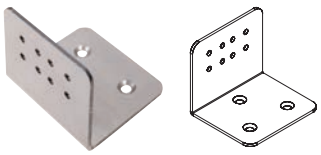

> Material: Steel

Finish	Item No.
zinc-plated	420.01.011

Supplied With
4 brackets
Self-tapping screws

→ Rear Mount Face Frame Bracket

> Material: Steel

Finish	Item No.
zinc-plated	420.01.010

Supplied With
2 brackets
Mounting hardware

→ Disconnect Levers for P Packs, required

> Material: Steel; Finish: zinc-plated

Version	Item No.
Individual pack	433.29.080
Bulk pack	433.29.090

Supplied With
Individual Pack: 1 pair with 4 screws in polybag
Bulk Pack: 60 right levers and 60 left levers packed separately with 120 screws in polybag

→ Drill Jig

> Provides hole locations for drawer hook, front face frame hole, disconnect lever and front cabinet holes
> Material: Zinc

Color	Item No.
blue	420.01.012

Dimensional data not binding. Dimensions in mm, inches are approximate. We reserve the right to alter specifications without notice.

Accuride Eclipse

→ 3160EC

> Weight capacity: 45.5 kg (100 lbs.)
> Commercial grade
> Easy close mechanism consistently brings drawers to a gentle close
> Fluid damper resists slam without adding bounce back
> Lower spacer clip reduces migration and side to side movement
> Meets ADA requirements with 4.8 lbs. of pull force
> For drawers up to 1074–1524 mm (41"–60") wide with included cable system and Wide Drawer Stabilizer Kit
> 3 mm (1/8") vertical, horizontal and depth adjustment
> 3D adjustment in disconnect levers
> Material: Steel; Finish: bright electro-zinc

Length	Item No.
305 (12")	433.29.051
356 (14")	433.29.052
381 (15")	433.29.053
406 (16")	433.29.054
457 (18")	433.29.055
508 (20")	433.29.056
533 (21")	433.29.057
559 (22")	433.29.058
610 (24")	433.29.059
660 (26")	433.29.060
711 (28")	433.29.061

Supplied With
1 pair slides, Screws, Disconnect levers, Cable system, Mounting instructions

Note
Wide drawer stabilizer kit is required for 1074–1524 mm (41"–60") wide drawers, sold separately, to the right.

→ Wide Drawer Stabilizer Kit, required

> Stabilizes and prevents side-to-side movement

	Item No.
	433.29.081

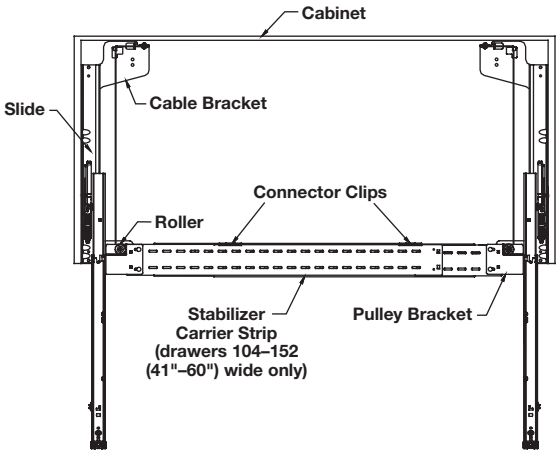

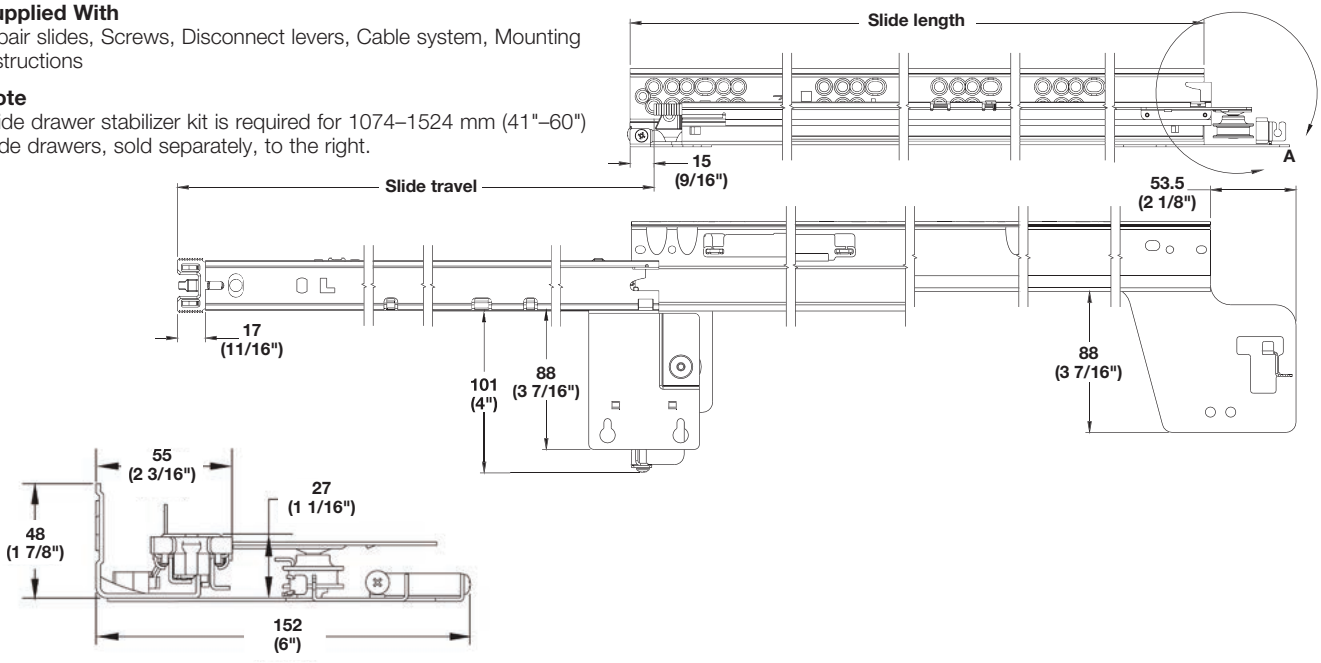

Dimensional data not binding. Dimensions in mm, inches are approximate. We reserve the right to alter specifications without notice.

	Description	Type	Weight capacity	Extension	Ball bearing	Page
	Center Mount Slide	1029	35 lbs.	3/4	steel	**8.83**
	Side Mount Slide	2632	75 lbs.	full	steel	**8.84**
	Side Mount Slide, Cam Adjust	2132	75 lbs.	3/4	steel	**8.84**
	Side Mount Slide	3732	100 lbs.	full	steel	**8.86**
	Telescopic Side Mount Slide, Cam Adjust	3832E	100 lbs.	full	steel	**8.87**
	Telescopic Side Mount Slide, Cam Adjust	3834E	90 lbs.	1" overtravel	steel	**8.88**
	Telescopic Side Mount Slide, Cam Adjust	3832ESC	100 lbs.	full	steel	**8.89**
	Telescopic Side Mount Slide, Cam Adjust	3834ESC	90 lbs.	1" overtravel	steel	**8.90**
	Heavy-Duty, Telescopic Side Mount Slide, Cam Adjust	3832EHDSC	100 lbs.	full	steel	**8.91**
	Telescopic Side Mount Slide, Cam Adjust	3832EC	100 lbs.	full	steel	**8.92**
	Detent Out, Telescopic Side Mount Slide, Cam Adjust	3832EDO	100 lbs.	full	steel	**8.93**
	Touch Release, Telescopic Side Mount Slide, Cam Adjust	3832ETR	100 lbs.	full	steel	**8.94**
	Heavy Duty Touch Release, Telescopic Side Mount Slide, Cam Adjust	3832HDTR	100 lbs.	full	steel	**8.95**
	Weather Resistant, Telescopic Side Mount Slide, Cam Adjust	CH3832E	100 lbs.	full	steel	**8.96**
	Telescopic Side Mount Slide	3348	150 lbs.	1" overtravel	steel	**8.97**

Dimensional data not binding. Dimensions in mm, inches are approximate. We reserve the right to alter specifications without notice.

	Description	Type	Weight capacity	Extension	Ball bearing	Page
	Heavy-Duty, Side/Bottom Mount Slide	3634	200 lbs.	1" overtravel	steel	**8.98**
	Heavy-Duty Side Mount Slide	3634EC	150 lbs.	1" overtravel	steel	**8.99**
	Progressive Side Mount Slide	7432	100 lbs.	full	steel	**8.100**
	Progressive Side Mount Slide	7434	100 lbs.	1" overtravel	steel	**8.101**
	Telescopic Side Mount Slide	3017	100 lbs.	1" overtravel	polymer	**8.102**
	Progressive, Heavy-Duty Side Mount, File Drawer Slide	4034	150 lbs.	1 1/2" overtravel	steel	**8.103**
	Side Mount, Interlocking Drawer System	3641/3642	180 lbs.	1" overtravel	steel	**8.104**
	Telescopic Heavy-Duty, Side/Bottom Mount, File Drawer Slide	3640-A	75/200 lbs.	1" overtravel	steel	**8.105**
	Heavy-Duty, Side/Bottom Mount Slide	7957/7950	350/150 lbs.	full	steel	**8.106**
	Heavy-Duty, Side/Bottom Mount Slide	9301E	150/500 lbs.	full	steel	**8.107**
	Top Mount, Keyboard/Pencil Drawer Slide	2109	75 lbs.	3/4	steel	**8.108**
	Two-Way Side Mount Travel Slide	2002	50 lbs.	3/4	steel	**8.109**
	Two-Way Side Mount Travel Slide	0363	100 lbs.	full	steel	**8.110**
	Pull-Out Side Mount Shelf Slide	322	100 lbs.	7/8" overtravel	steel	**8.111**
	Lock-Out Side Mount Slide	340	110 lbs.	full	steel	**8.112**
	Over Extension Base Mount Slide	301-2590	155 lbs.	7/8" overtravel	steel	**8.113**
	Side Mount Slide	3600-200	175 lbs.	full	steel	**8.114**
	Top/Bottom Mount Slide	3600-201				**8.115**
	Linear Motion Track System	115RC	265 lbs.		stainless steel polymer	**8.116-8.117**

Dimensional data not binding. Dimensions in mm, inches are approximate. We reserve the right to alter specifications without notice.

Accuride 3/4 Extension

→ 1029 Center Mounted

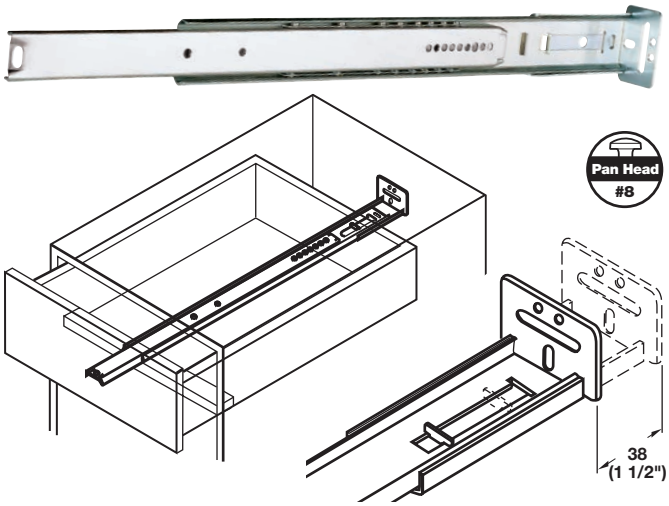

> Weight capacity: 16 kg (35 lbs.)/pc.
> Recommended for drawers up to 406 mm (16") wide
> Friction disconnect
> Features concealed center bottom mount (no side clearance required)
> Adjustable rear mounting bracket available (order separately below)
> A concealed undermount slide for small shallow drawers in light duty applications
> Material: Steel; Finish: zinc, electro-plated

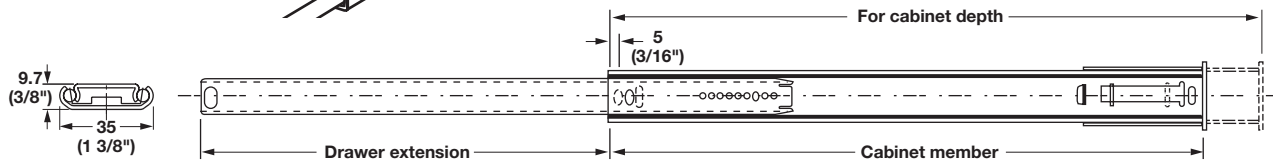

For drawer depth	For cabinet depth	Cabinet member	Drawer extension	Item No.
270–318 (10 5/8–12 1/2")	330–368 (13–14 1/2")	327 (12 7/8")	216 (8 1/2")	422.00.304
321–368 (12 5/8–14 1/2")	381–419 (15–16 1/2")	378 (14 7/8")	267 (10 1/2")	422.00.359
371–419 (14 5/8–16 1/2")	432–470 (17–18 1/2")	429 (16 7/8")	305 (12")	422.00.402
422–470 (16 5/8–18 1/2")	482–521 (19–20 1/2")	479 (18 7/8")	318 (12 1/2")	422.00.457
473–521 (18 5/8–20 1/2")	533–572 (21–22 1/2")	530 (20 7/8")	381 (15")	422.00.500
524–572 (20 5/8–22 1/2")	584–622 (23–24 1/2")	581 (22 7/8")	419 (16 1/2")	422.00.555

Supplied With
Rear adjustable bracket, 2 Tacks, 5 Screws

→ Adjustable Rear Mounting Bracket

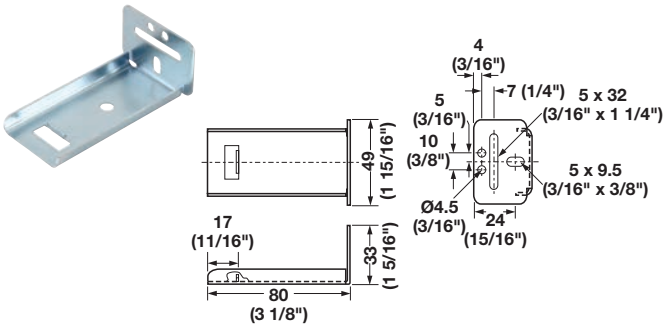

> Top of slide mounting
> Material: Steel

Finish	Item No.
zinc-plated	422.03.001

→ Reverse Rear Mounting Bracket

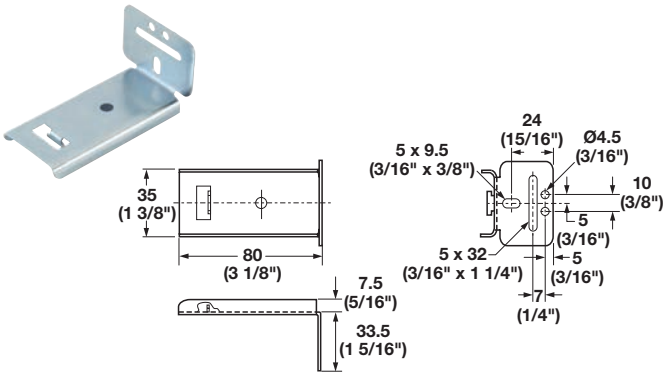

> Bottom of slide mounting
> Material: Steel

Finish	Item No.
zinc-plated	422.03.002

Pan head screws pages 12.9-12.10

Dimensional data not binding. Dimensions in mm, inches are approximate. We reserve the right to alter specifications without notice.

Accuride Full Extension

> Weight capacity: 35 kg (75 lbs.)/pair
> Suitable for light duty store fixtures, lab furniture or residential
> Drawers up to 406 mm (16") wide
> Hold-in detent to prevent drawer roll-out
> Rail mount/disconnect
> Silenced in and out
> Material: Steel; Finish: zinc, electro-plated

→ 2632 Side Mounted

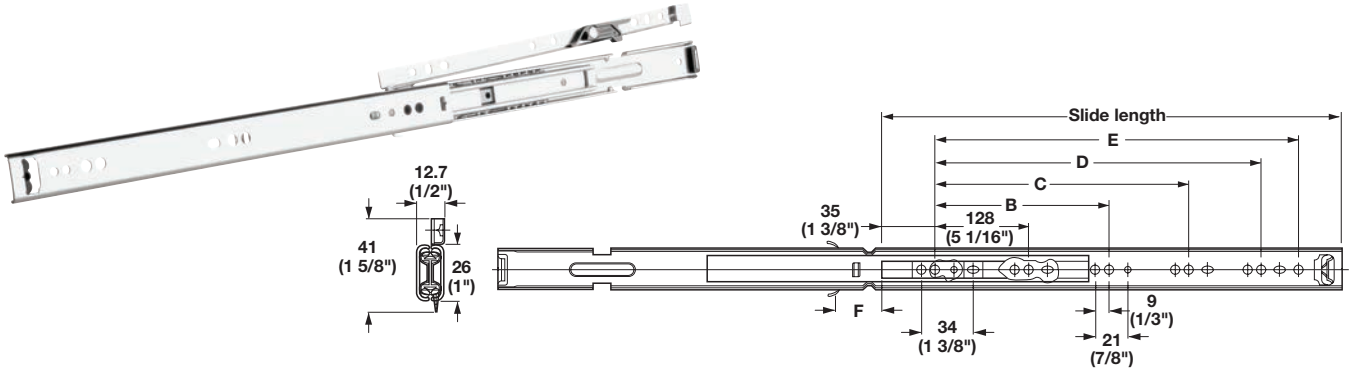

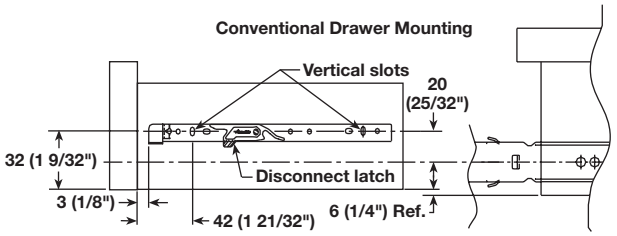

Length and travel	B	C	D	E	F	Item No.
203 (8")	-	-	-	-	37 (1 1/2")	422.24.206
254 (10")	-	-	-	-	88 (3 1/2")	422.24.251
305 (12")	224 (8 13/16")	-	-	-	35 (1 3/8")	422.24.304
356 (14")	224 (8 13/16")	-	-	-	86 (3 3/8")	422.24.359
406 (16")	224 (8 13/16")	320 (12 5/8")	-	-	73 (2 7/8")	422.24.402
457 (18")	224 (8 13/16")	352 (13 7/8")	-	-	123 (4 7/8")	422.24.457
508 (20")	224 (8 13/16")	416 (16 3/8")	-	-	78 (3")	422.24.500
559 (22")	224 (8 13/16")	352 (13 7/8")	448 (17 5/8")	480 (18 29/32")	129 (5")	422.24.555

Supplied With
10 pairs in polybag;
1 pair Slides
Handed rails
Screws

Dimensional data not binding. Dimensions in mm, inches are approximate. We reserve the right to alter specifications without notice.

Accuride 3/4 Extension

> Weight capacity max.: 34 kg (75 lbs.) /pair
> For drawers up to 406 mm (16") wide
> Hold-in detent
> Easy lever disconnect
> Use in shallow drawer for office supplies or kitchen utensils
> BHMA certified to Grade 1 HD-100
> Material: Steel; Finish: zinc, electro-plated

→ 2132 Side Mounted

cam DRAWER ADJUST

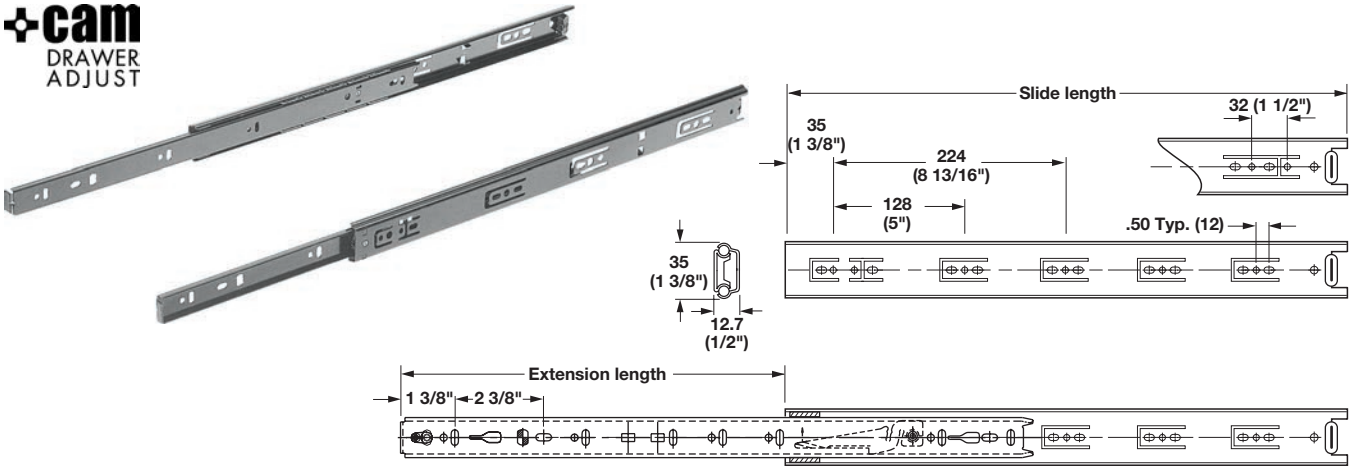

Slide length	Extension length	Shop pack Item No.	Bulk pack Item No.
350 (13 3/4")	260 (10 1/4")	422.32.935	422.32.936
400 (15 3/4")	281 (11 1/16")	422.32.940	422.32.941
450 (18 3/4")	331 (13 1/16")	422.32.945	422.32.946
500 (19 5/8")	376 (14 3/4")	422.32.950	422.32.951
550 (21 5/8")	415 (16 1/4")	422.32.955	422.32.956

Supplied With
Shop Pack: 1 pair Slides, Screws, Instructions
Bulk Pack: 10 pairs Slides

→ Face Frame Brackets, optional

Front clip-on bracket

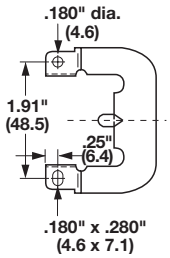

Rear metal bracket

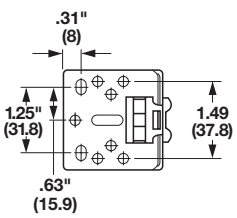

> Rear bracket offers 50 mm (2") adjustment
> Material: Steel

Finish	Item No.
zinc-plated	422.37.000

Truss head screws page 12.15

Dimensional data not binding. Dimensions in mm, inches are approximate. We reserve the right to alter specifications without notice.

Accuride Full Extension

> Weight capacity: 45 kg (100 lbs.)/pair
> For drawers: max. 406 mm (16") wide
> Hold-in detent
> Push latch disconnect
> Extra low profile height 37 mm (1 1/2")
> Front face frame mounting hole
> Material: Steel, zinc electro-plated

→ 3732 Side Mounted

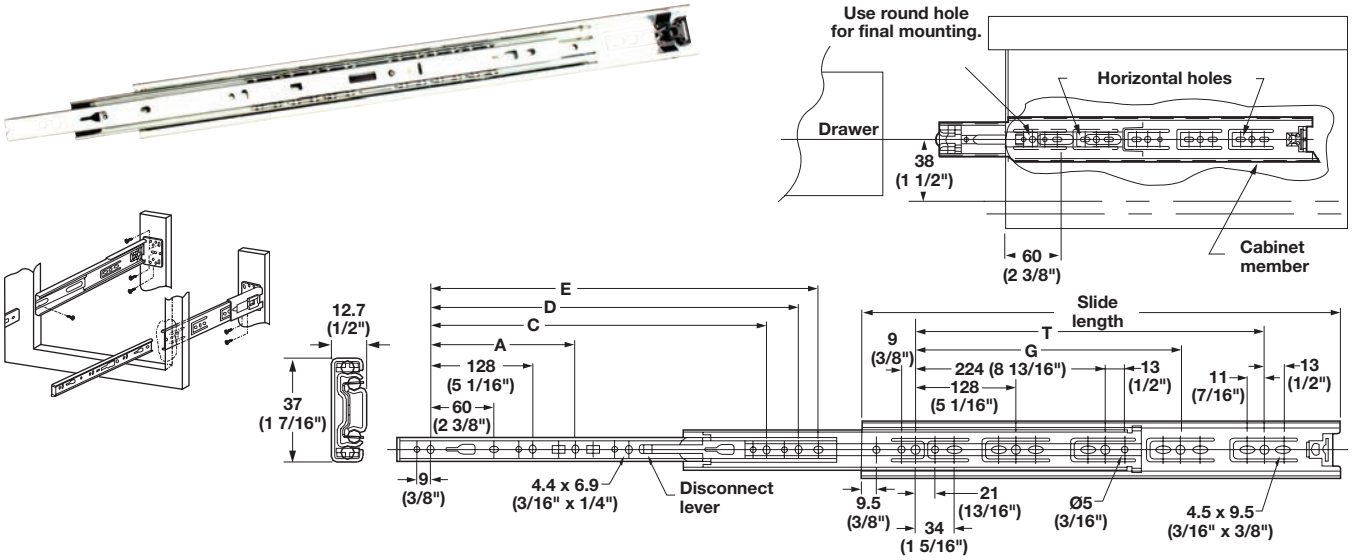

Installed length	Travel	Distance A	C	D	E	G	T	Bulk pack zinc	Bulk pack black	Bulk pack white	FP pack zinc
300 (11 7/8")	292 (11 1/2")	-	-	-	231 (9")	-	-	422.88.931	422.88.331	422.88.731	422.88.932
350 (13 3/4")	356 (14")	-	-	-	281 (11")	-	-	422.88.936	422.88.336	422.88.736	422.88.937
400 (15 3/4")	406 (16")	-	-	-	331 (13")	-	320 (12 5/8")	422.88.941	422.88.341	422.88.741	422.88.942
450 (17 3/4")	457 (18")	-	320 (12 5/8")	-	381 (15")	-	352 (13 7/8")	422.88.946	422.88.346	422.88.746	422.88.947
500 (19 3/4")	508 (20")	-	320 (12 5/8")	-	431 (17")	-	416 (16 3/8")	422.88.951	422.88.351	422.88.751	422.88.952
550 (21 5/8")	559 (22")	-	320 (12 5/8")	416 (16 3/8")	481 (19")	352 (13 7/8")	-	422.88.956	422.88.356	422.88.756	422.88.957
600 (23 5/8")	610 (24")	224 (8 7/8")	416 (16 3/8")	-	531 (20 7/8")	352 (13 7/8")	480 (18 7/8")	422.88.961	-	-	-
650 (25 5/8")	660 (26")	224 (8 7/8")	416 (16 3/8")	544 (21 7/16")	581 (22 7/8")	352 (13 7/8")	544 (21 7/16")	422.88.966	-	-	-

Supplied With
FP Pack: 10 pairs, separated
Bulk Pack: 10 pairs

→ Face Frame Bracket Kit, optional

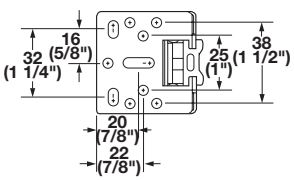

> Material: Steel

Finish	Item No.
zinc-plated	422.88.000

Ball bearing screws page 12.14

Dimensional data not binding. Dimensions in mm, inches are approximate. We reserve the right to alter specifications without notice.

Accuride Full Extension, Telescopic

> Weight capacity max.: 45 kg. (100 lbs.)/pair
> For drawers: max. 610 mm (24") wide
> Hold-in detent
> Lever disconnect
> BHMA and AWI certified to Grade 1 HD-100
> Material: Steel, electro-plated

→ 3832E Side Mounted

cam DRAWER ADJUST

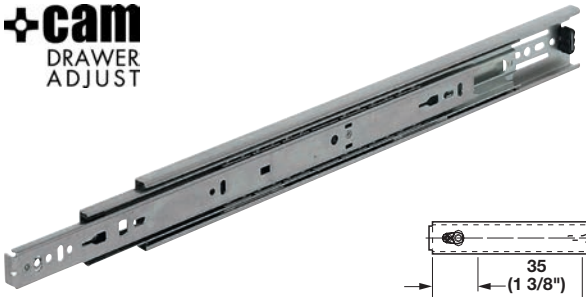

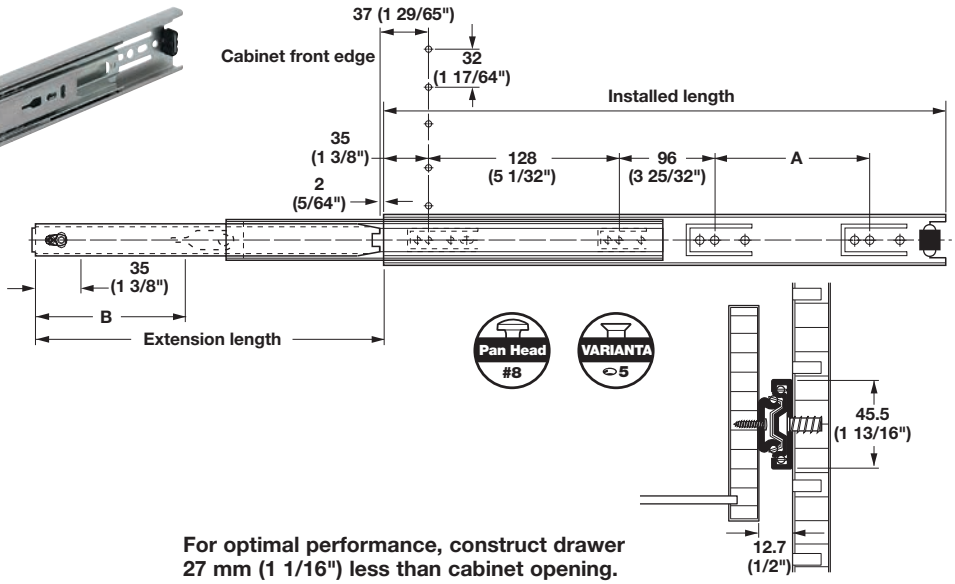

For optimal performance, construct drawer 27 mm (1 1/16") less than cabinet opening.

Installed and extension length	Shop pack zinc	Bulk pack zinc	Bulk pack black	Bulk pack white	FP pack zinc
150 (6")	422.04.152	-	-	-	-
200 (8")	422.04.203	-	-	-	-
250 (10")	422.04.258	422.04.259	422.04.268	422.04.277	422.04.925
300 (12")	422.04.301	422.04.302	422.04.311	422.04.320	422.04.930
350 (14")	422.04.356	422.04.357	422.04.366	422.04.375	422.04.935
400 (16")	422.04.401	422.04.400	422.04.419	422.04.428	422.04.940
450 (18")	422.04.454	422.04.455	422.04.464	422.04.473	422.04.945
500 (20")	422.04.507	422.04.508	422.04.517	422.04.526	422.04.950
550 (22")	422.04.552	422.04.553	422.04.562	422.04.571	422.04.955
600 (24")	422.04.605	422.04.606	422.04.615	422.04.624	422.04.960
650 (26")	422.04.650	422.04.651	422.04.660	422.04.679	422.04.965
700 (28")	422.04.703	422.04.704	422.04.713	422.04.722	422.04.970

Supplied With Shop Pack: 1 pair, Screws and Instructions; FP Pack: 10 pairs, separated, Bulk Pack: 10 pairs

→ Face Frame Rear Brackets, optional

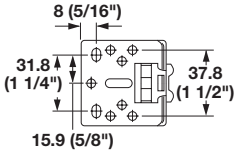

> Material: Steel

Finish	Item No.
zinc-plated	422.59.002

Note
2 pcs required per slide

Pan head screws	pages 12.9-12.10
Varianta screws	page 12.16

Dimensional data not binding. Dimensions in mm, inches are approximate. We reserve the right to alter specifications without notice.

Accuride Full Extension, Telescopic

→ 3834E Side Mounted

cam DRAWER ADJUST

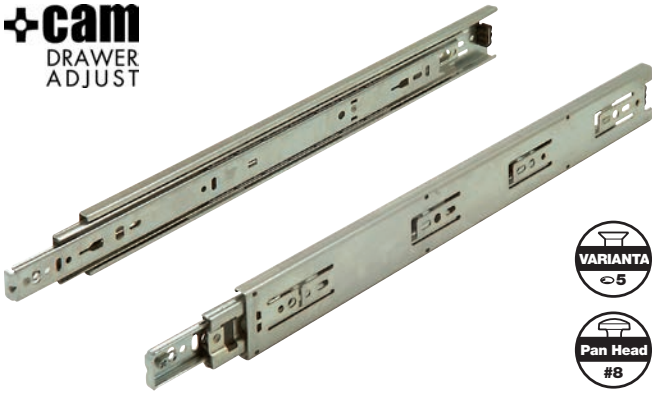

VARIANTA ⌀5

Pan Head #8

- > Weight capacity: 41 kg (90 lbs.)/pair
- > For drawers: max. 610 mm (24") wide
- > Hold-in detent
- > Lever disconnect
- > 26 mm (1") overtravel
- > Material: Steel, electro-plated

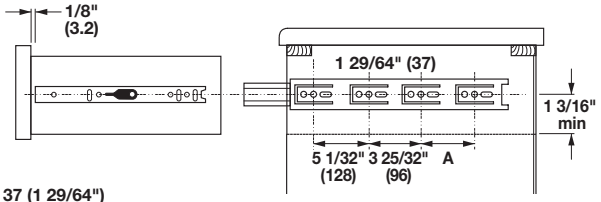

For optimal performance, construct drawer 27 mm (1 1/16") less than cabinet opening.

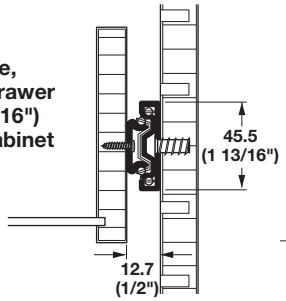

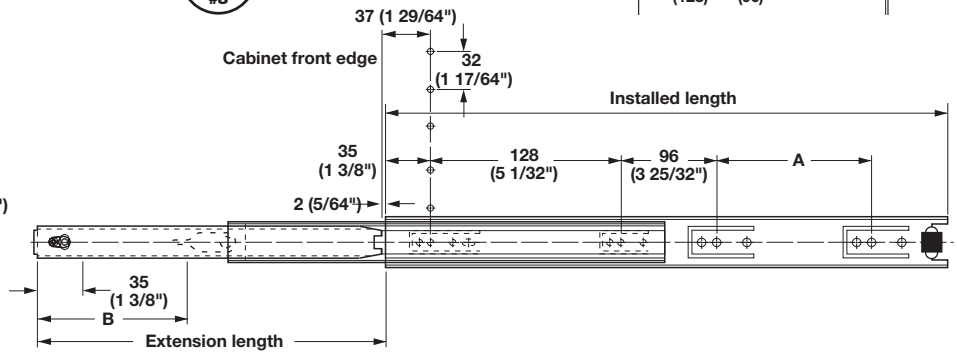

Installed length	Extension length	zinc	black
300 (12")	330 (13")	422.16.302	422.16.311
350 (14")	381 (15")	422.16.352	422.16.366
400 (16")	432 (17")	422.16.400	422.16.419
450 (18")	483 (19")	422.16.455	422.16.464
500 (20")	533 (21")	422.16.508	422.16.517
550 (22")	584 (23")	422.16.553	422.16.562
600 (24")	635 (25")	422.16.606	-
700 (28")	737 (29")	422.16.704	422.16.713

→ Face Frame Rear Brackets, optional

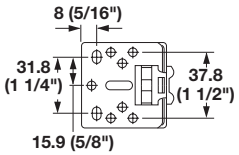

- > Material: Steel

Finish	Item No.
zinc-plated	422.59.002

Note
2 pcs. required per slide

Pan head screws	pages 12.9-12.10
Varianta screws	page 12.16

Dimensional data not binding. Dimensions in mm, inches are approximate. We reserve the right to alter specifications without notice.

Accuride Full Extension, Telescopic, Self-closing

> Weight capacity: 45 kg (100 lbs.)/pair
> For drawers: max. 600 mm (24") wide
> Self-closing feature closes drawers and keeps them closed
> Lever disconnect
> Strong pull out force is required to open drawers
> Material: Steel, electro-plated or epoxy coated

→ 3832ESC Side Mounted

cam DRAWER ADJUST

VARIANTA 5

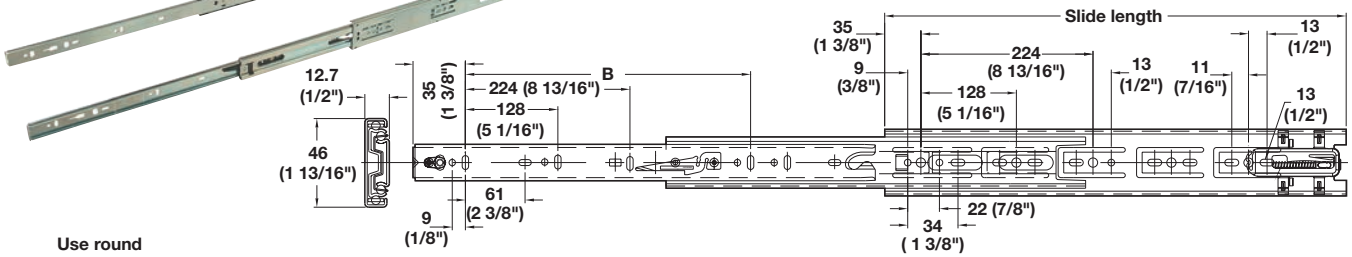

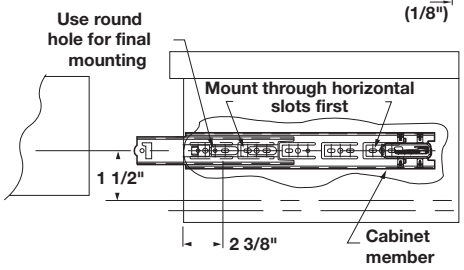

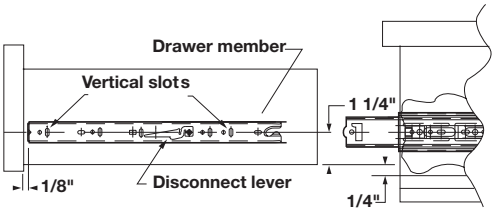

For optimal performance, construct drawer 27 mm (1 1/16") less than cabinet opening.

Installed and extension length	B	Shop pack zinc	Bulk pack zinc	Shop pack black	Bulk pack black	Shop pack white epoxy	Bulk pack white epoxy
300 (12")		422.59.930	-	-	-	-	-
350 (14")*		422.59.935	422.59.936	422.59.335	422.59.336	-	422.59.736
400 (16")		422.59.940	422.59.941	422.59.340	422.59.341	422.59.740	422.59.741
450 (18")	320 (12 5/8")	422.59.945	422.59.946	422.59.345	422.59.346	422.59.745	422.59.746
500 (20")		422.59.950	422.59.951	422.59.350	422.59.351	422.59.750	422.59.751
550 (22")	416 (16 3/8")	422.59.955	422.59.956	422.59.355	422.59.356	422.59.755	422.59.756
600 (24")	416 (16 3/8")	422.59.960	422.59.961	-	-	-	-
650 (26")	416 (16 3/8")	422.59.965	422.59.966	-	-	-	-

Supplied With Shop Pack: 1 pair, Screws, Instructions; Bulk Pack: 10 pairs

Note *Travel on the 350 mm (14") is 307 mm (12 1/16").

→ Face Frame Rear Brackets, optional

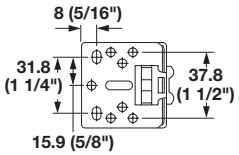

> Material: Steel

Finish	Item No.
zinc-plated	422.59.002

Varianta screws page 12.16

Dimensional data not binding. Dimensions in mm, inches are approximate. We reserve the right to alter specifications without notice.

Accuride Full Extension, Telescopic, Self-closing

→ 3834ESC Side Mounted

cam DRAWER ADJUST

> Weight capacity: 41 kg (90 lbs.)/pair
> For drawers: max. 600 mm (24") wide
> Use in retail displays and institutional fixtures
> Self-closing
> Lever disconnect
> 1" overtravel
> Material: Steel, electro-plated

Installed length	B	Extension length	Item No.
350 (14")	-	381 (15")	422.86.936
400 (16")	-	432 (17")	422.86.941
450 (18")	320 (12 5/8")	483 (19")	422.86.946
500 (20")	-	533 (21")	422.86.951
550 (22")	416 (14 3/8")	584 (23")	422.86.956
600 (24")	416 (14 3/8")	635 (25")	422.86.961

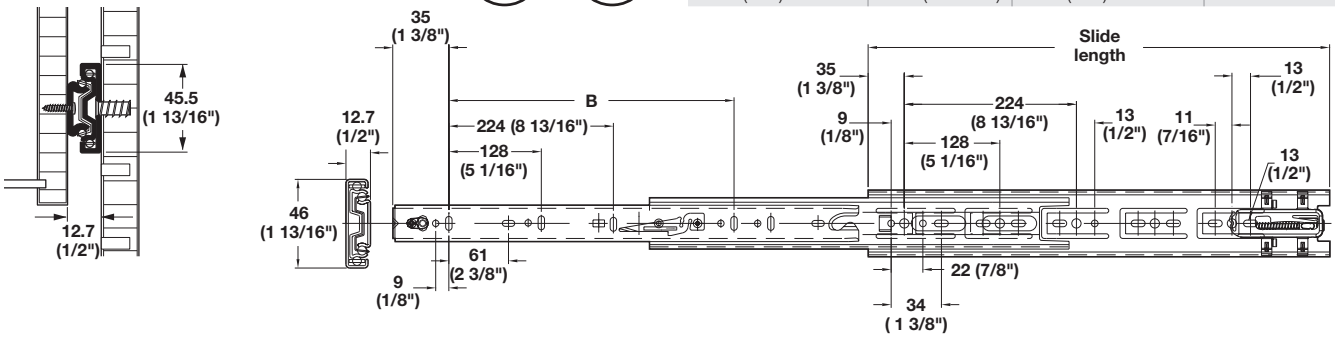

→ Face Frame Bracket Kit, optional

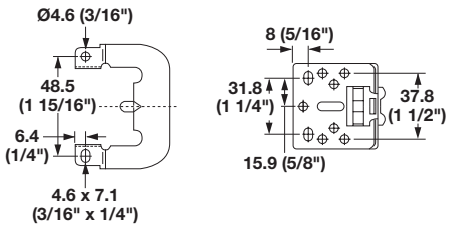

> Material: Steel

Finish	Item No.
zinc-plated	422.04.000

Supplied With
2 Front/rear brackets

Pan head screws	pages 12.9-12.10
Varianta screws	page 12.16

Dimensional data not binding. Dimensions in mm, inches are approximate. We reserve the right to alter specifications without notice.

Accuride Full Extension, Telescopic, Self-closing, Heavy Duty

> Weight capacity: 45 kg (100 lbs.)/pair
> For drawers: max. 600 mm (24") wide
> Greater stay-closed action to accommodate heavy duty applications such as commercial, mobile and institutional spaces
> Self-closing with a pull force x 2 of standard 3832SC slide
> Lever disconnect
> Material: Steel, electro-plated; Finish: Zinc

→ 3832EHDSC Side Mounted

VARIANTA ⌀5

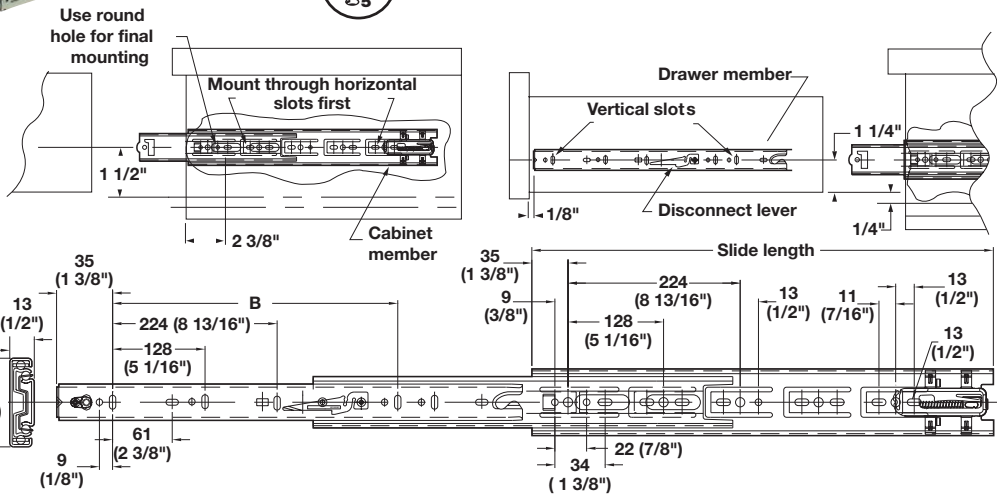

For optimal performance, construct drawer 27 mm (1 1/16") less than cabinet opening.

Installed and extension length	B	Item No.
300 (12")	-	422.97.930
350 (14")	-	422.97.935
400 (16")	-	422.97.940
450 (18")	320 (12 5/8")	422.97.945
500 (20")	-	422.97.950
550 (22")	416 (16 3/4")	422.97.955
600 (24")	416 (16 3/4")	422.97.960

→ Face Frame Rear Brackets, optional

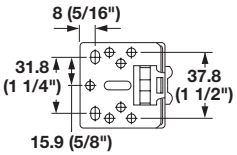

> Material: Steel

Finish	Item No.
zinc-plated	422.59.002

Varianta screws page 12.16

Dimensional data not binding. Dimensions in mm, inches are approximate. We reserve the right to alter specifications without notice.

Accuride Full Extension, Telescopic, Easy Close

> Weight capacity: 45 kg (100 lbs.)/pair
> For drawers: max. 406 mm (16") wide
> Easy close brings drawer to a gradual soft close
> Lever disconnect for easy removal and re-insertion
> Front face frame mounting hole
> Not intended for lateral file drawer applications
> Material: Steel, electro-plated; Bearings: Steel

→ 3832EC Side Mounted

cam DRAWER ADJUST

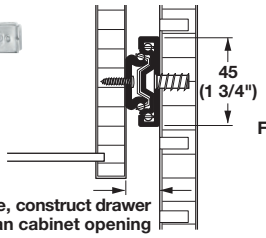

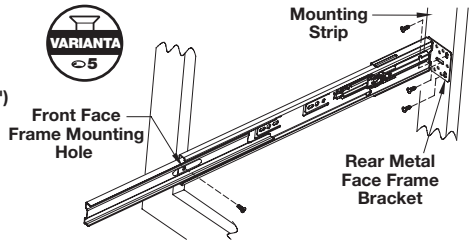

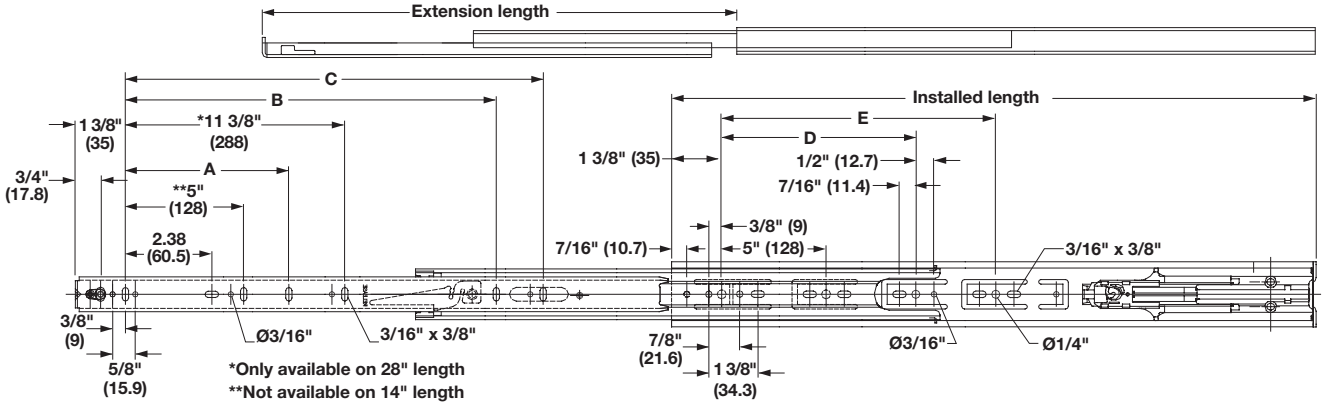

Installed and extension length	Distance					Item No.	
	A	B	C	D	E	Bulk pack	Shop pack
350 (14")*	-	206 (8 1/8")	-	-	-	432.23.936	432.23.935
400 (16")	-	257 (10 1/8")	-	-	-	432.23.941	432.23.940
450 (18")	-	305 (12")	-	224 (8 3/4")	-	432.23.946	432.23.945
500 (20")	-	352 (13 7/8")	-	224 (8 3/4")	-	432.23.951	432.23.950
550 (22")	-	407 (16")	352 (13 7/8")	224 (8 3/4")	-	432.23.956	432.23.955
600 (24")	224 (8 3/4")	-	416 (16 3/8")	224 (8 3/4")	352 (13 7/8")	432.23.961	432.23.960
650 (26")	224 (8 3/4")	-	416 (16 3/8")	224 (8 3/4")	352 (13 7/8")	432.23.966	432.23.965
700 (28")	224 (8 3/4")	-	554 (21 7/16")	224 (8 3/4")	352 (13 7/8")	432.23.971	432.23.970

Supplied With Shop Pack: 1 pair, Screws, Instructions; Bulk Pack: 10 pairs

Note *Travel on the 350 mm (14") is 307 mm (12 1/16").

→ Face Frame Rear Bracket Kit, optional

> Material: Steel

Finish	Item No.
zinc-plated	432.23.015

Varianta screws page 12.16

Dimensional data not binding. Dimensions in mm, inches are approximate. We reserve the right to alter specifications without notice.

Accuride Full Extension, Telescopic, Detent Out

> Weight capacity: 45 kg (100 lbs.)/pair
> For drawers: max. 610 mm (24") wide
> Hold-in detent
> Easy lever disconnect
> Special detent out to hold drawers in an open position
> For keyboards or any application requiring a positive hold-out
> For optimal performance make drawers 29 mm (1 1/8") less than cabinet opening
> BMHA and AWI Certified Grade 1 HD-100
> Specially crafted with longer spacers and extra bearings
> Hold-out detent to keep pull-out surfaces solidly positioned
> Material: Steel, electroplated

→ 3832EDO Side Mounted

cam DRAWER ADJUST

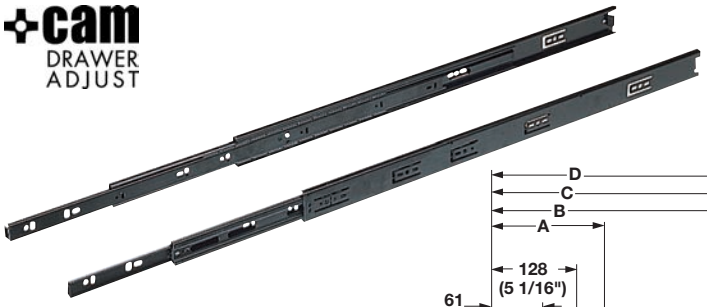

For optimal performance, construct drawer 29 mm (1 1/8") less than cabinet opening.

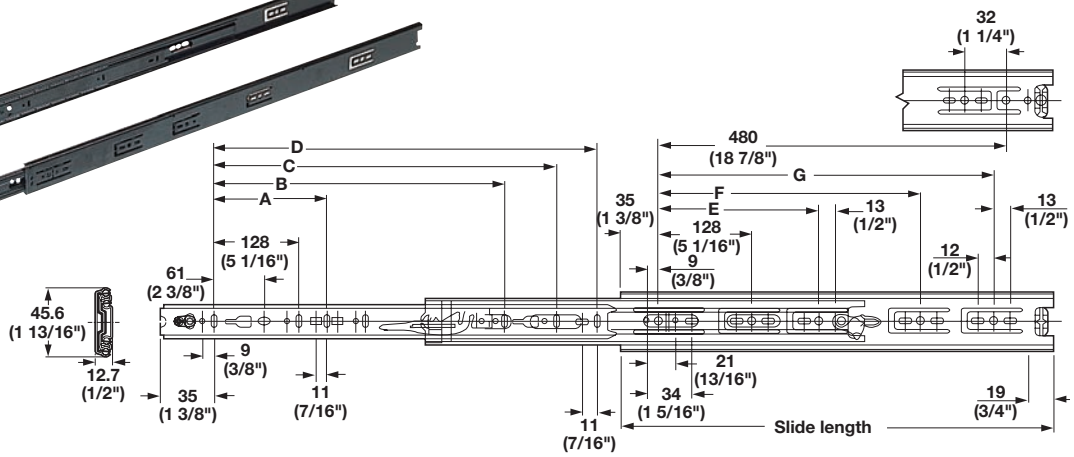

Installed and extension length	zinc	black
305 (12")	422.91.931	422.91.331
356 (14")	422.91.936	422.91.336
406 (16")	422.91.941	422.91.341
457 (18")	422.91.946	422.91.346
508 (20")	422.91.951	422.91.351
559 (22")	422.91.956	422.91.356
610 (24")	422.91.961	-
660 (26")	422.91.966	-
711 (28")	422.91.971	422.91.371

→ Face Frame Rear Brackets, optional

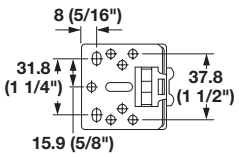

> Material: Steel

Finish	Item No.
zinc-plated	422.59.002

Ball bearing screws page 12.14

Dimensional data not binding. Dimensions in mm, inches are approximate. We reserve the right to alter specifications without notice.

Accuride Full Extension, Telescopic, Touch Release

> Weight capacity: 45 kg (100 lbs.)/pair
> For drawers: max. 610 mm (24") wide
> For drawers in mobile carts, vehicles or other fixtures which must remain closed in transit
> Perfect for medical environments where sanitation and safety are concerned
> Lock-in feature helps keep drawers closed
> Lever disconnect
> Push on the drawer front to open or close the drawer
> Opening mechanism activated by 2 mm (1/16") travel inward
> Propels drawers open approximately 51–127 mm (2"–5") from the closed position
> BMHA and AWI Certified Grade 1 HD-100
> ADA compliant
> Material: Steel, electroplated

→ 3832ETR Side Mounted

cam DRAWER ADJUST

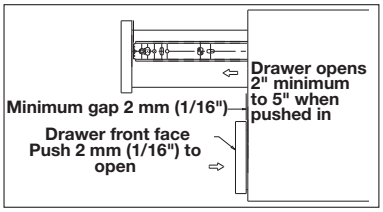

VARIANTA ⌀5

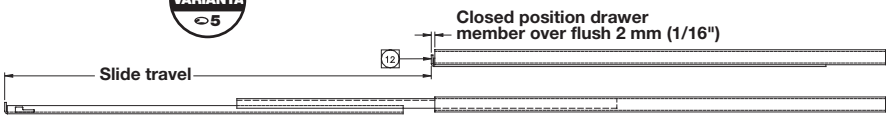

For optimal performance, construct drawer 27 mm (1 1/16") less than cabinet opening.

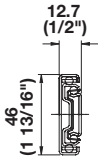

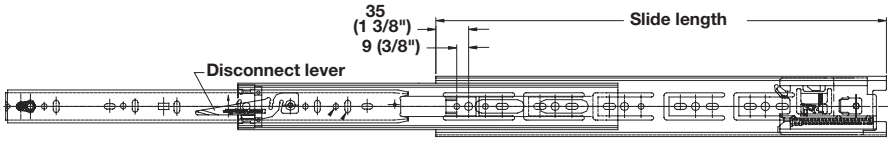

Installed and extension length	Item No.
305 (12")	422.04.335
356 (14")	422.04.385
406 (16")	422.04.435
457 (18")	422.04.485
508 (20")	422.04.535
559 (22")	422.04.585
610 (24")	422.04.635
660 (26")	422.04.685

→ Face Frame Bracket Kit

Front clip-on bracket

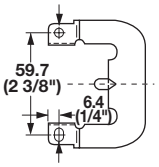

Rear metal bracket

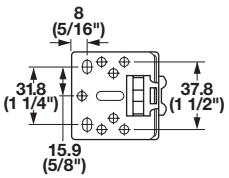

> Material: Steel

Finish	Item No.
zinc-plated	422.04.002

Varianta screws page 12.16

Dimensional data not binding. Dimensions in mm, inches are approximate. We reserve the right to alter specifications without notice.

Accuride Full Extension, Telescopic, Heavy Duty Touch Release

> Weight capacity: 45 kg (100 lbs.)/pair
> For drawers: max. 610 mm (24") wide
> Push on the drawer front to open or close the drawer (touch activated)
> Perfect for RVs and utility vehicles
> Opening mechanism activated by 2 mm (1/16") travel inward
> Propels drawers open approximately 51–127 mm (2–5") from the closed position
> Lock-in feature helps keep drawers closed
> Holding capacity is 1.5X stronger than standard 3832TR
> Lever disconnect
> Elimination of drawer pulls/handles provides an aesthetic, streamlined look
> BMHA and AWI Certified Grade 1 HD-100
> Material: Steel, electro-plated

→ 3832HDTR Side Mounted

cam DRAWER ADJUST

VARIANTA ⟲5

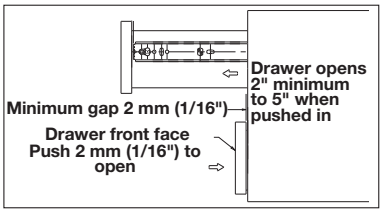

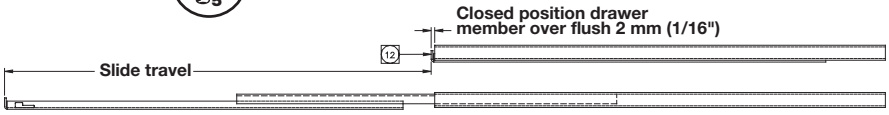

For optimal performance, construct drawer 27 mm (1 1/16") less than cabinet opening.

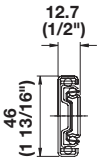

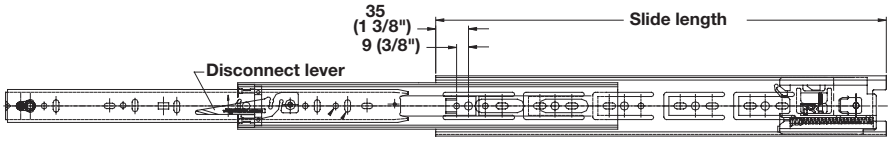

Installed and extension length	Item No.
305 (12")	422.97.830
356 (14")	422.97.835
406 (16")	422.97.840
457 (18")	422.97.845
508 (20")	422.97.850
559 (22")	422.97.855
610 (24")	422.97.860
660 (26")	422.97.865

→ Face Frame Bracket Kit

Front clip-on bracket

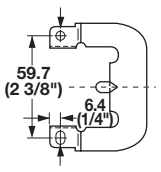

Rear metal bracket

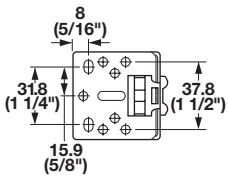

> Material: Steel

Finish	Item No.
zinc-plated	422.04.002

Varianta screws page 12.16

Dimensional data not binding. Dimensions in mm, inches are approximate. We reserve the right to alter specifications without notice.

Accuride Full Extension, Telescopic, Weather Resistant

→ CH3832E Side Mounted

cam DRAWER ADJUST

> Weight capacity: 45 kg (100 lbs.)/pair
> For drawers: max. 610 mm (24") wide
> Designed to withstand moderate weather conditions with a special coating that provides 8X more protection than zinc finish
> Hold-in detent
> Lever disconnect
> Stainless steel ball bearings, retainer and rivets
> BHMA and AWI certified to Grade 1 HD-100
> Material: Steel, H-coat

Installed and extension length	Item No.
254 (10")	422.04.825
305 (12")	422.04.830
356 (14")	422.04.835
406 (16")	422.04.840
457 (18")	422.04.845
508 (20")	422.04.850
559 (22")	422.04.855
610 (24")	422.04.860

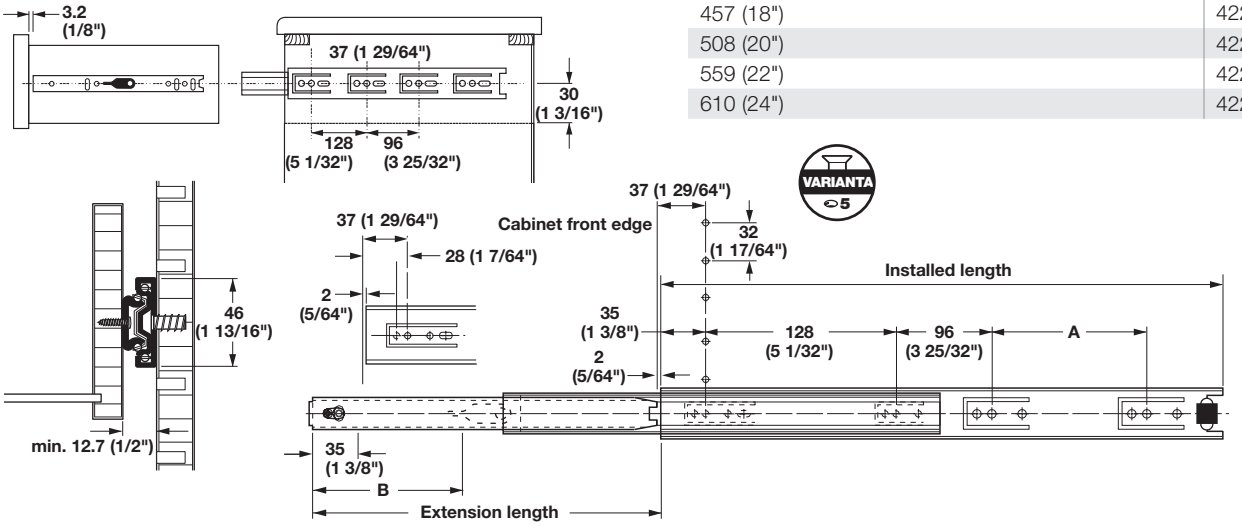

→ Face Frame Rear Brackets, optional

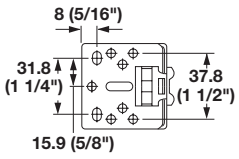

> Material: Steel

Finish	Item No.
zinc-plated	422.59.002

Varianta screws page 12.16

Dimensional data not binding. Dimensions in mm, inches are approximate. We reserve the right to alter specifications without notice.

Accuride Full Extension

→ 3348 Side Mounted

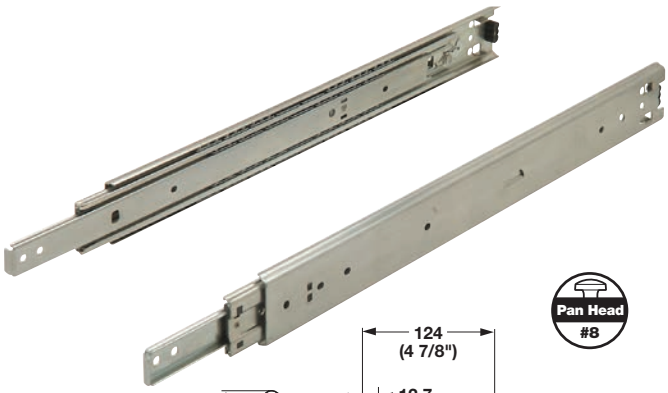

> Weight capacity: 68 kg (150 lbs.)
> Detent-out with 25 mm (1") overtravel
> Lockable detent out holds drawers in open position
> Front latch disconnect
> Material: Steel, electro-plated; Finish: zinc

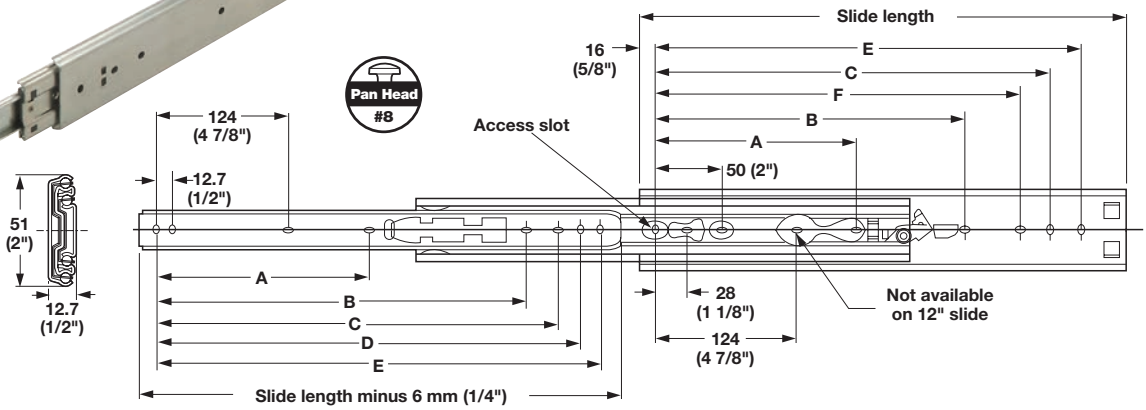

Slide length	A	B	C	D	E	F	Item No.
406 (16")	-	-	337 (13 1/4")	349 (13 3/4")	362 (14 1/4")	311 (12 1/4")	422.89.940
457 (18")	178 (7")	314 (12 3/8")	387 (15 1/4")	400 (15 3/4")	413 (16 1/4")	362 (14 1/4")	422.89.945
508 (20")	203 (8")	365 (14 3/8")	438 (17 1/4")	451 (17 3/4")	464 (18 1/4")	413 (16 1/4")	422.89.950
559 (22")	229 (9")	416 (16 3/8")	489 (19 1/4")	502 (19 3/4")	514 (20 1/4")	464 (18 1/4")	422.89.955

Pan head screws pages 12.9-12.10

Dimensional data not binding. Dimensions in mm, inches are approximate. We reserve the right to alter specifications without notice.

Accuride Full Extension

> Weight capacity: 68 kg (150 lbs.)
> Drawer width: max. 914 mm (36")
> Side space: 12.7 mm (1/2") + .03 mm (1/32")
> Hold-in detent
> Lever disconnect
> BHMA and AWI certified to Grade 1 HD-100
> Material: Steel, electro-plated; Finish: zinc

→ 3932 Side Mounted

Length	D Pack	P Pack
250 (10")	422.05.200	422.05.220
300 (12")	422.05.201	422.05.221
350 (14")	422.05.202	422.05.222
400 (16")	422.05.203	422.05.223
450 (18")	422.05.204	422.05.224
500 (20")	422.05.205	422.05.225
550 (22")	422.05.206	422.05.226
600 (24")	422.05.207	422.05.227
650 (26")	422.05.208	422.05.228
700 (28")	422.05.209	422.05.229

→ 3932EC Side Mounted, Easy Close

Length	D Pack	P Pack
300 (12")	422.05.241	422.05.261
350 (14")	422.05.242	422.05.262
400 (16")	422.05.243	422.05.263
450 (18")	422.05.244	422.05.264
500 (20")	422.05.245	422.05.265
550 (22")	422.05.246	422.05.266
600 (24")	422.05.247	422.05.267
650 (26")	422.05.248	422.05.268
700 (28")	422.05.249	422.05.269

Note
For optimal performance, construct drawer 27 mm (1 1/16") less than cabinet opening.

D Pack - Shop pack: 1 pair slides, mounting screws, instructions
P Pack - Bulk pack: slides only

Ball bearing screws page 12.14

Dimensional data not binding. Dimensions in mm, inches are approximate. We reserve the right to alter specifications without notice.

Accuride Full Extension, Easy Close

This page is left blank intentionally.

Dimensional data not binding. Dimensions in mm, inches are approximate. We reserve the right to alter specifications without notice.

Accuride Heavy Duty Over Travel

> Weight capacity max./pair: Side mounted: 91 kg (200 lbs.)
Flat mounted: 34 kg (75 lbs.)
> For drawers: max. 1067 mm (42") wide
> Lever disconnect allows for easier drawer removal and reinsertion
> 25.4 mm (1") over travel for full access to drawer contents
> For storage in retail fixtures, restaurants, medical facilities and offices as well as residential kitchens and garages
> Outer member hole pattern matches models 3832/3834
> Slides are unhanded, which helps speed and ease of installation
> Material: Steel, electro-plated

→ 3634 Side/Bottom Mounted

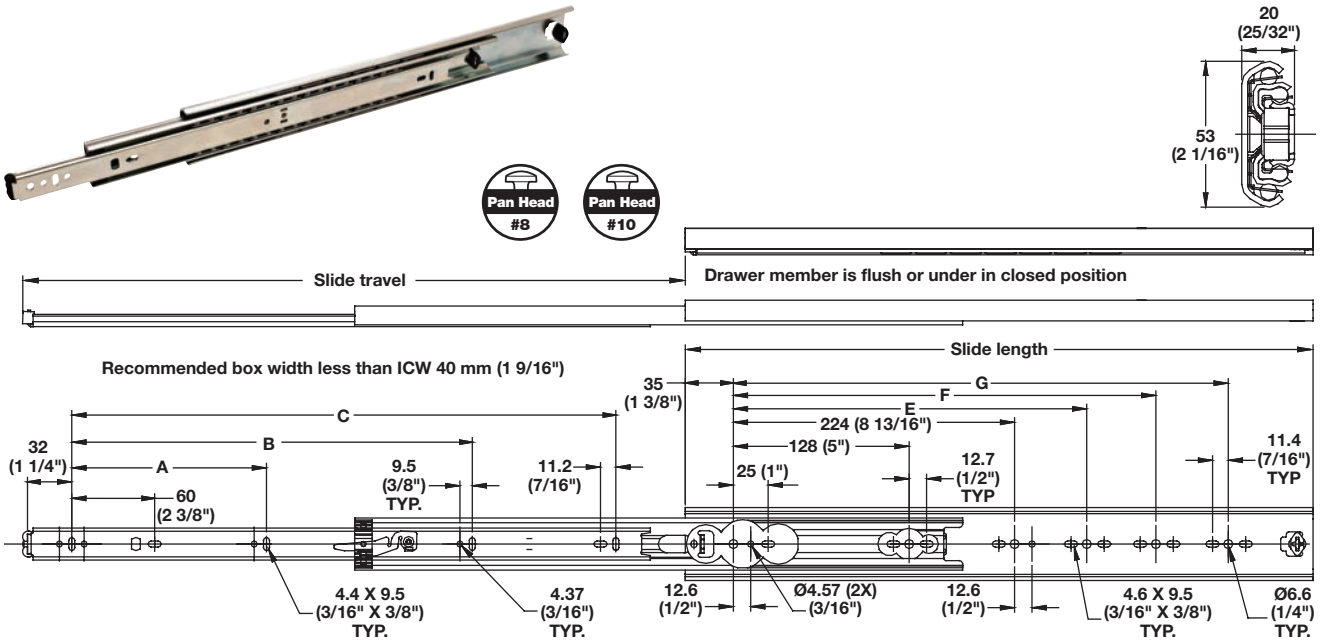

Slide Length	Slide Travel	A	B	C	E	F	G	D pack	P pack
305 (12")	330 (13")	-	-	244 (9 5/8")	-	-	-	422.05.001	422.05.021
356 (14")	381 (15")	-	-	295 (11 5/8")	-	-	-	422.05.002	422.05.022
406 (16")	432 (17")	-	-	345 (13 9/16")	-	-	-	422.05.003	422.05.023
457 (18")	483 (19")	142 (5 5/8")	333 (13 1/8")	396 (15 5/8")	352 (13 7/8")	-	-	422.05.004	422.05.024
508 (20")	533 (21")	142 (5 5/8")	333 (13 1/8")	447 (17 5/8")	352 (13 7/8")	-	-	422.05.005	422.05.025
559 (22")	584 (23")	142 (5 5/8")	333 (13 1/8")	498 (19 5/8")	352 (13 7/8")	480 (18 7/8")	-	422.05.006	422.05.026
610 (24")	635 (25")	142 (5 5/8")	417 (16 3/8")	549 (21 5/8")	352 (13 7/8")	480 (18 7/8")	-	422.05.007	422.05.027
660 (26")	686 (27")	142 (5 5/8")	417 (16 3/8")	560 (23 5/8")	352 (13 7/8")	-	544 (21 7/16")	422.05.008	422.05.028
711 (28")	737 (29")	142 (5 5/8")	417 (16 3/8")	650 (25 5/8")	352 (13 7/8")	-	544 (21 7/16")	422.05.009	422.05.029

Note 356 mm (14") is full travel. **Supplied With** D Pack - 1 pair of Slides, Mounting screws in polybag. P Pack - (Bulk) 5 pairs / box. Mounting hardware is not included.

Pan head screws pages 12.9-12.10

Dimensional data not binding. Dimensions in mm, inches are approximate. We reserve the right to alter specifications without notice.

Accuride Heavy Duty Over Travel, Easy Close

> Weight capacity/pair: 79 kg (175 lbs.)
> Drawer width: max. 1067 mm (42")
> Easy-close feature brings drawers to a smooth, gentle close
> Lever disconnect allows for easier drawer removal and reinsertion
> 50 mm (1") over travel for full access to drawer contents
> For storage in retail fixtures, restaurants, medical facilities and offices as well as residential kitchens and garages
> Outer member hole pattern matches models 3832/3834
> Slides are unhanded, which helps speed and ease of installation
> Material: Steel, electro-plated

→ 3634EC Side Mounted

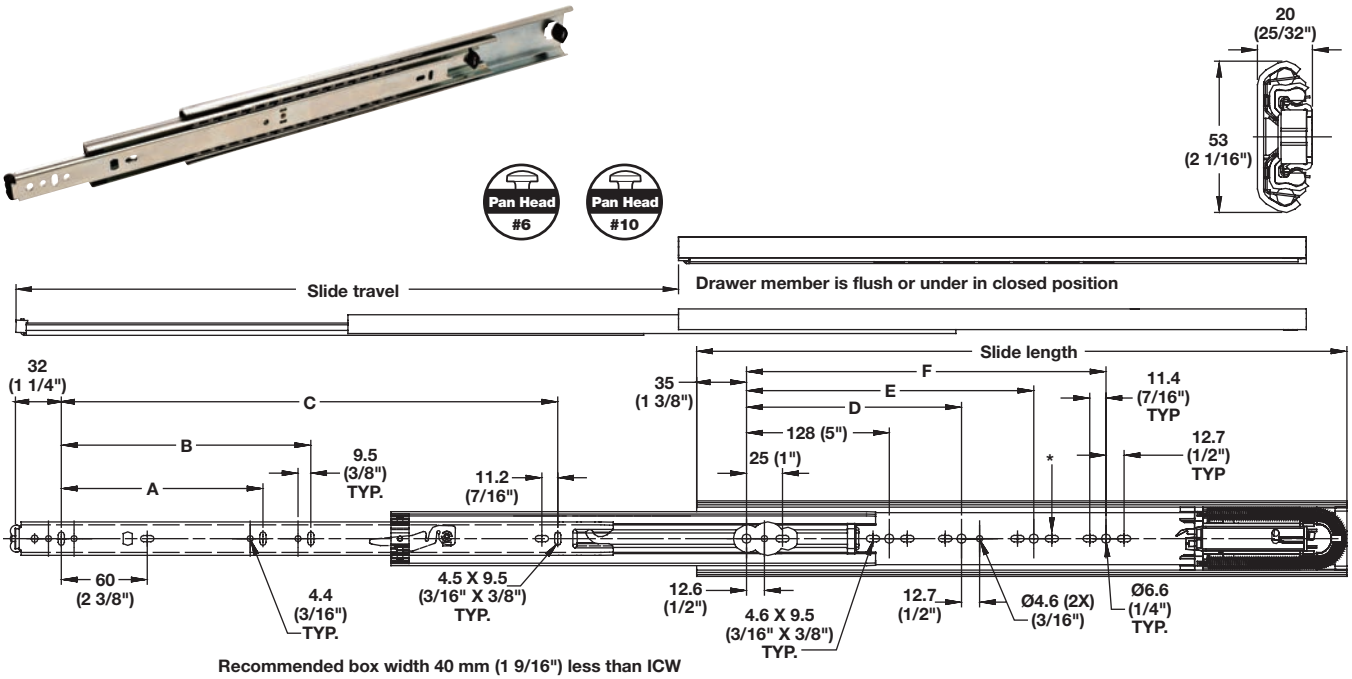

Recommended box width 40 mm (1 9/16") less than ICW

Slide length	Slide travel	A	B	C	D	E	F	D Pack	P Pack
*356 (14")	356 (14")	142 (5 5/8")	-	247 (9 3/4")	-	-	-	422.05.102	422.05.122
406 (16")	432 (17")	142 (5 5/8")	-	298 (11 3/4")	-	-	-	422.05.103	422.05.123
457 (18")	483 (19")	142 (5 5/8")	333 (13 1/8")	349 (14 3/4")	224 (8 13/16")	-	-	422.05.104	422.05.124
508 (20")	533 (21")	142 (5 5/8")	333 (13 1/8")	400 (15 3/4")	224 (8 13/16")	-	-	422.05.105	422.05.125
559 (22")	584 (23")	142 (5 5/8")	-	451 (17 3/4")	224 (8 13/16")	-	-	422.05.106	422.05.126
610 (24")	635 (25")	142 (5 5/8")	417 (16 3/8")	501 (19 3/4")	224 (8 13/16")	352 (13 7/8")	-	422.05.107	422.05.127
660 (26")	686 (27")	142 (5 5/8")	417 (16 3/8")	552 (21 3/4")	224 (8 13/16")	352 (13 7/8")	-	422.05.108	422.05.128
711 (28")	737 (29")	142 (5 5/8")	330 (13 1/8")	603 (23 3/4")	224 (8 13/16")	352 (13 7/8")	480 (18 7/8")	422.05.109	422.05.129

Note *356 mm (14") is full travel. **Supplied With** D Pack - 1 pair of Slides, Mounting screws in polybag. P Pack - (Bulk) 5 pairs / box. Mounting hardware is not included.

Pan head screws pages 12.9-12.10

Dimensional data not binding. Dimensions in mm, inches are approximate. We reserve the right to alter specifications without notice.

Accuride Full Extension, Progressive

> Weight capacity: 45 kg (100 lbs.)/pair
> For drawers: max. 610 mm (24") wide
> Great for file drawers, desks or medium duty storage
> Hold-in detent prevents drawer bounce back and roll out
> Rail mounted for easy drawer installation and removal
> BHMA and AWI certified to Grade 1 HD-100
> Material: Steel, electro-plated

cam DRAWER ADJUST

→ 7432 Side Mounted

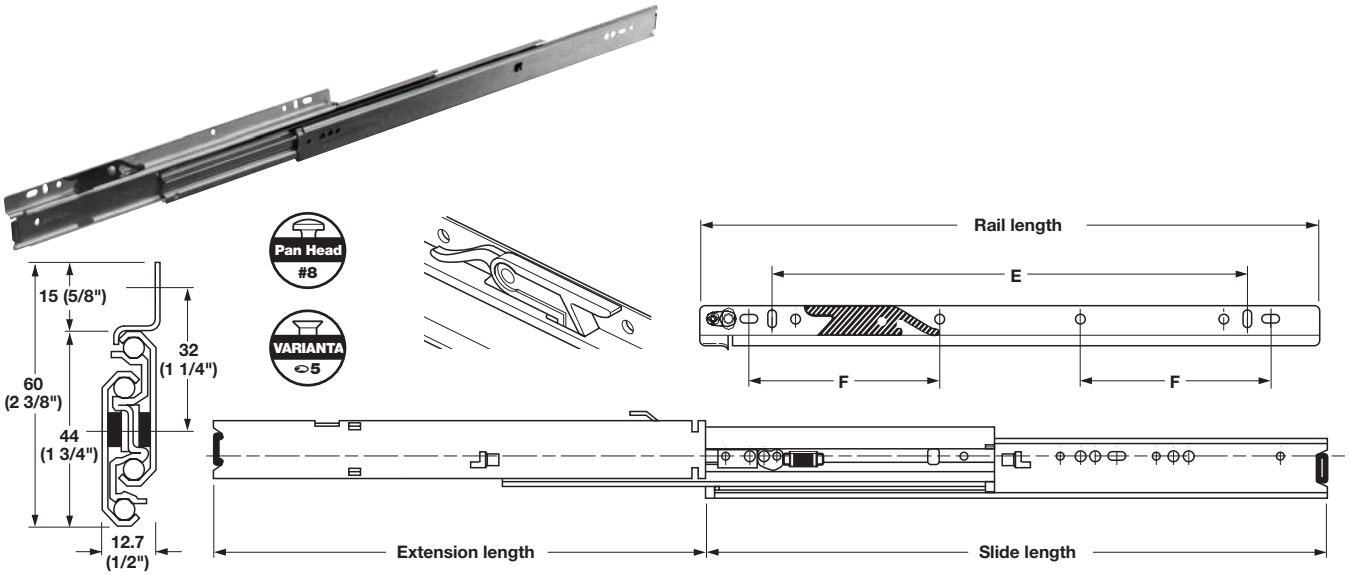

Length	Extension length	Rail length	Shop pack zinc-plated	X pack zinc
300 (11 13/16")	305 (12")	268 (10 9/16")	422.29.930	422.29.932
350 (13 3/4")	355 (14")	268 (10 9/16")	422.29.935	422.29.937
400 (15 3/4")	405 (15 11/16")	332 (13 1/16")	422.29.940	422.29.942
450 (17 11/16")	455 (17 15/16")	332 (13 1/16")	422.29.945	422.29.947
500 (19 11/16")	505 (19 7/8")	428 (16 7/8")	422.29.950	422.29.952
550 (21 5/8")	555 (21 7/8")	524 (20 5/8")	422.29.955	422.29.957
600 (23 5/8")	605 (23 13/16")	524 (20 5/8")	422.29.960	422.29.962
650 (25 9/16")	655 (25 13/16")	620 (24 7/16")	422.29.965	422.29.967
700 (27 9/16")	705 (27 3/4")	620 (24 7/16")	422.29.970	-

Supplied With
X Pack: 5 pairs Slides, Mounting rails, Screws
Shop Pack: 1 pair Slides, Mounting rails, Screws in polybag

Rail Dimensions

For slide lengths	Rail length	E	F	Rail item
305–356 (12–14")	268 (10 9/16")	192 (7 9/16")	102 (4")	7156-1214
381–457 (15–18")	332 (13 1/16")	254 (10")	102 (4")	7156-1518
482–533 (19–21")	428 (16 7/8")	352 (13 7/8")	102 (4")	7156-1921
508–635 (22–25")	524 (20 5/8")	448 (17 5/8")	178 (7")	7156-2225
660–711 (26–28")	620 (24 7/16")	544 (21 7/16")	178 (7")	7156-2628

Pan head screws	pages 12.9-12.10
Varianta screws	page 12.16

Dimensional data not binding. Dimensions in mm, inches are approximate. We reserve the right to alter specifications without notice.

Accuride Full Extension, Progressive

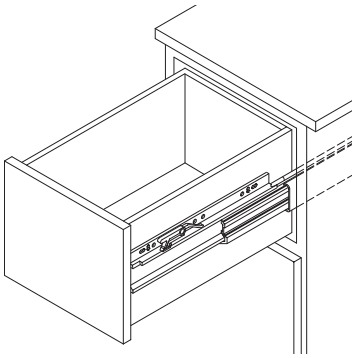

> Weight capacity: 45 kg (100 lbs.)/pair
> For drawers: max. 610 mm (24") wide
> With 1" overtravel
> Full drawer access with smooth, consistent movement
> Steel ball bearings for increased strength & stability
> Hold-in detent, prevents drawer bounce back and roll out
> Rail mounted for easy drawer installation and removal
> Material: Steel, electro-plated

cam DRAWER ADJUST

→ 7434 Side Mounted

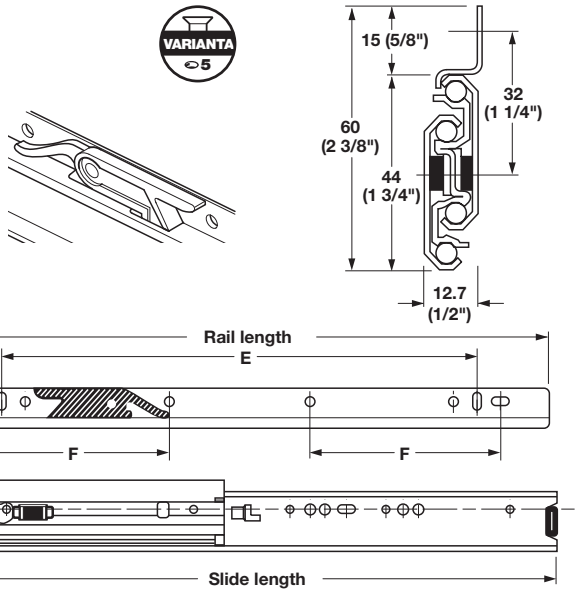

Installed length	Extension length	Rail length	Shop pack zinc-plated	X pack zinc
300 (11 13/16")	330 (13")	268 (10 9/16")	422.93.930	422.93.932
350 (13 3/4")	379 (14 15/16")	268 (10 9/16")	422.93.935	422.93.937
400 (15 3/4")	430 (16 15/16")	332 (13 1/16")	422.93.940	422.93.942
450 (17 11/16")	480 (18 7/8")	332 (13 1/16")	422.93.945	422.93.947
500 (19 11/16")	530 (20 7/8")	428 (16 7/8")	422.93.950	422.93.952
550 (21 5/8")	579 (22 13/16")	524 (20 5/8")	422.93.955	422.93.957
600 (23 5/8")	629 (24 3/4")	524 (20 5/8")	422.93.960	422.93.962
650 (25 9/16")	680 (26 3/4")	620 (24 7/16")	422.93.965	-
700 (27 9/16")	730 (28 3/4")	620 (24 7/16")	422.93.970	422.93.972

Supplied With
X Pack: 5 pairs Slides, Mounting rails, Screws; Shop Pack: 1 pair Slides, Mounting rails, Screws in polybag

Rail Dimensions

For slide lengths	Rail length	E	F	Rail item
305-356 (12-14")	268 (10 9/16")	192 (7 9/16")	102 (4")	7156-1214
381-457 (15-18")	332 (13 1/16")	254 (10")	102 (4")	7156-1518
482-533 (19-21")	428 (16 7/8")	352 (13 7/8")	102 (4")	7156-1921
508-635 (22-25")	524 (20 5/8")	448 (17 5/8")	178 (7")	7156-2225
660-711 (26-28")	620 (24 7/16")	544 (21 7/16")	178 (7")	7156-2628

Varianta screws page 12.16

Dimensional data not binding. Dimensions in mm, inches are approximate. We reserve the right to alter specifications without notice.

Accuride Full Extension, Telescopic

> Weight capacity: 45 kg (100 lbs.)/pair
> For drawers: max. 610 mm (24") wide
> Hold-in detent
> Rail mounted for easy drawer installation and removal
> With 1" overtravel
> Features polymer ball bearings for quiet movement
> For desk/credenza box and file drawer applications
> BHMA and AWI certified to Grade 1 HD-100
> Material: Steel, electro-plated

→ 3017 Side Mounted

Installed length	Extension length	A	B	C	D	E	Item No.	Packing
406 (16")	432 (17")	-	254 (10")	307 (12 1/16")	331 (13 3/64")	352 (13 7/8")	422.06.404	10
457 (18")	482 (19")	254 (10")	305 (12")	358 (14 1/16")	382 (15 3/64")	403 (15 7/8")	422.06.459	10
508 (20")	533 (21")	279 (11")	356 (14")	409 (16 1/16")	433 (17 3/64")	454 (17 7/8")	422.06.502	5
559 (22")	584 (23")	305 (12")	406 (16")	460 (18 1/16")	484 (19 3/64")	505 (19 7/8")	422.06.557	5
610 (24")	635 (25")	330 (13")	457 (18")	510 (20 1/16")	535 (21 3/64")	555 (21 7/8")	422.06.600	5
711 (28")	-	381 (15")	559 (22")	612 (24 1/8")	636 (25 1/16")	657 (25 7/8")	422.06.701	1

Supplied With
Mounting screws

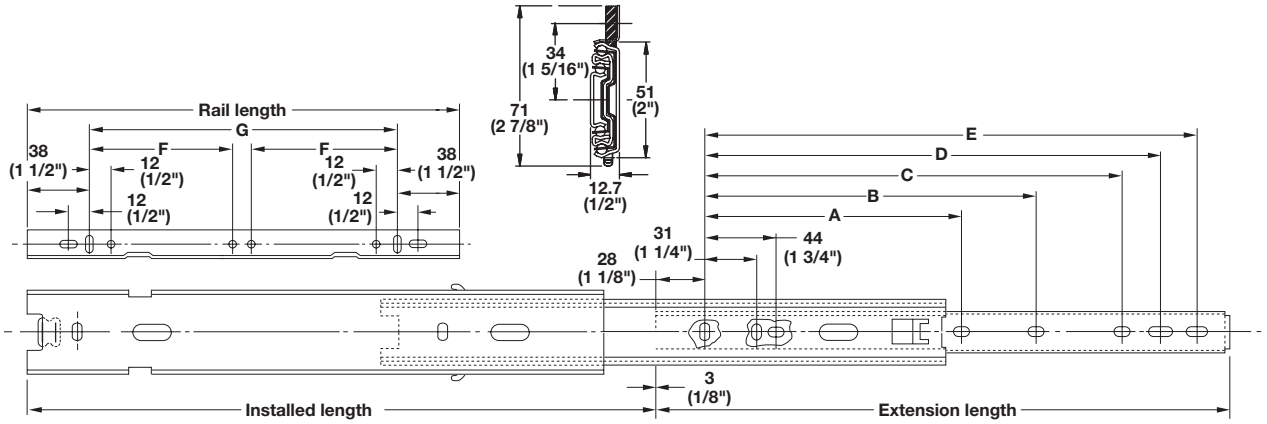

Rail Dimensions

Fits slide length	Rail length	F	G
406–457 (16–18")	332 (13 1/16")	102 (4")	256 (10 1/16")
508 (20")	428 (16 7/8")	102 (4")	352 (13 7/8")
559–610 (22–24")	524 (20 5/8")	178 (7")	448 (17 5/8")

Pan head screws pages 12.9-12.10

Dimensional data not binding. Dimensions in mm, inches are approximate. We reserve the right to alter specifications without notice.

Accuride Full Extension, Progressive

cam DRAWER ADJUST

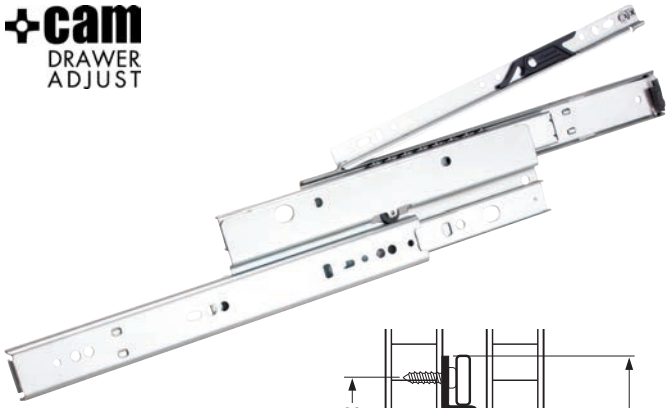

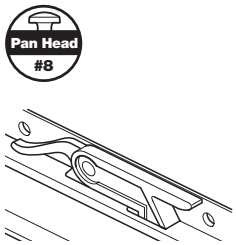

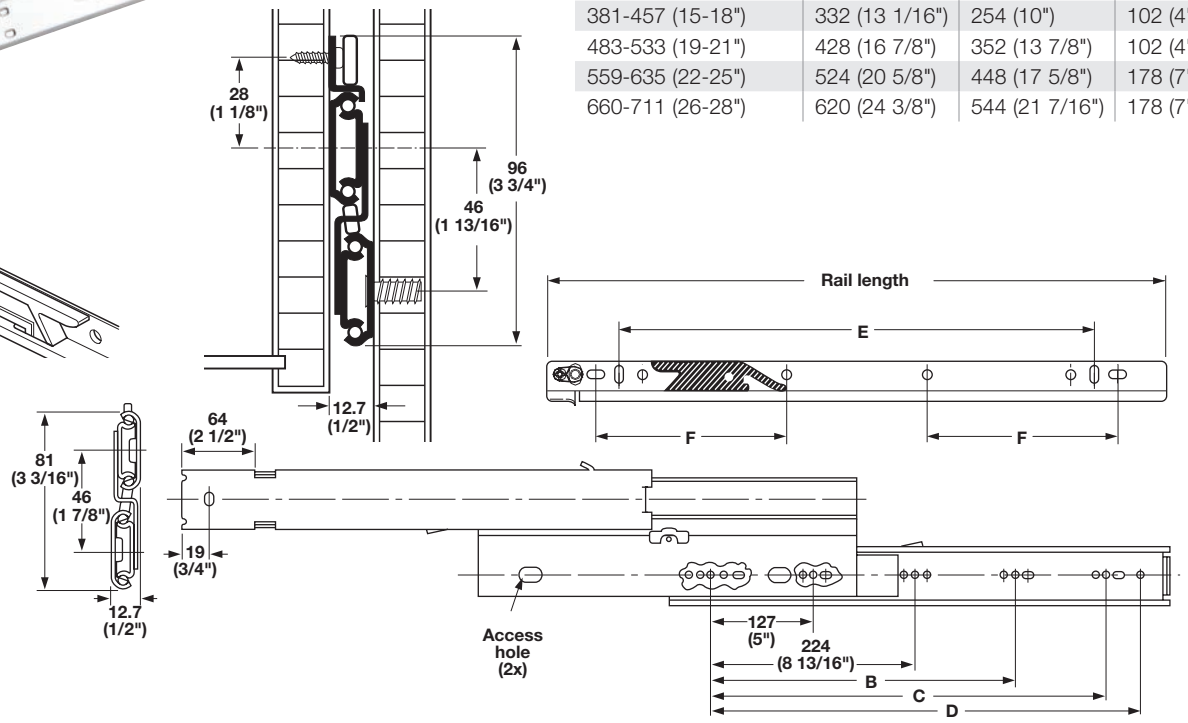

> Weight capacity: 68 kg (150 lbs.)/pair
> For drawers: max. 610 mm (24") wide
> Hold-in detent
> Rail mounted for easy drawer installation and removal
> With 38 mm (1 1/2") overtravel
> For file drawer applications in desks, credenzas, lateral files, store fixtures and institutional furniture
> Material: Steel, electro-plated

Rail Dimensions

Fits slide length	Rail length	E	F
305-356 (12-14")	268 (10 1/2")	192 (7 1/2")	102 (4")
381-457 (15-18")	332 (13 1/16")	254 (10")	102 (4")
483-533 (19-21")	428 (16 7/8")	352 (13 7/8")	102 (4")
559-635 (22-25")	524 (20 5/8")	448 (17 5/8")	178 (7")
660-711 (26-28")	620 (24 3/8")	544 (21 7/16")	178 (7")

→ 4034 Side Mounted

Installed length	Extension length	B	C	D	Shop pack		X pack	
					zinc	black	zinc	black
300 (12")	337 (13 1/4")	-	-	-	422.17.309	422.17.318	422.17.311	-
350 (14")	386 (15 7/32")	-	-	-	422.17.354	422.17.363	422.17.356	-
400 (16")	448 (17 5/8")	320 (12 1/2")	-	-	422.17.407	422.17.416	422.17.409	422.17.418
450 (18")	498 (19 5/8")	352 (14")	-	-	422.17.452	422.17.461	422.17.454	422.17.463
500 (20")	547 (21 1/2")	416 (16 3/8")	-	-	422.17.505	422.17.514	422.17.507	-
550 (22")	596 (23 29/64")	352 (14")	448 (17 5/8")	480 (19")	422.17.550	422.17.569	422.17.552	422.17.571
600 (24")	645 (25 25/64")	352 (14")	480 (19")	-	422.17.603	422.17.612	422.17.605	-
650 (26")	694 (27 5/16")	352 (14")	544 (21 7/16")	-	422.17.658	-	422.17.660	-
700 (28")	743 (29 1/4")	352 (14")	544 (21 7/16")	608 (24")	422.17.701	-	422.17.703	-

Supplied With
Shop Pack: 1 pair Slides, Rails, Mounting screws
X Pack: 5 pairs Slides, Rails, Screws

Pan head screws pages 12.9-12.10

Dimensional data not binding. Dimensions in mm, inches are approximate. We reserve the right to alter specifications without notice.

Accuride Full Extension, Interlocking Drawer System

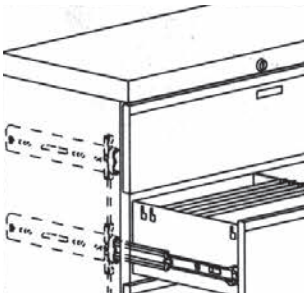

> Weight capacity: 82 kg (180 lbs.)/pair
> For drawers: max. 1067 mm (42") wide
> Prevents more than one drawer from opening at a time
> Hold-in detent to prevent roll-out and bounce back
> One piece rail-and-pocket mount/disconnect
> With 25.4 mm (1") overtravel
> Interfaces with central locking system
> Slides are unhanded, rails are handed
> Suitable for commercial or residential filing cabinet drawers requiring interlock
> Material: Steel; Finish: zinc-plated

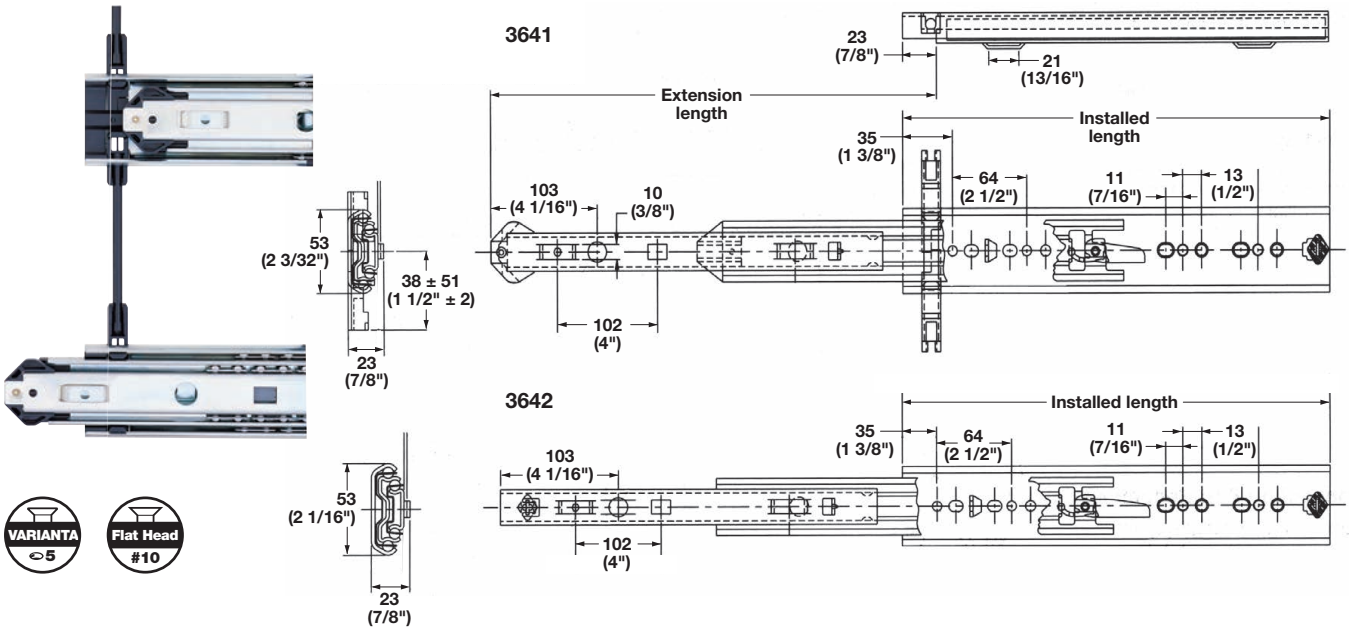

VARIANTA ⌀5

Flat Head #10

→ 3641/3642 Side Mounted

Length	Extension length	Item No.
354 (14")	356 (14")	422.45.935
406 (16")	432 (17")	422.45.937
457 (18")	482 (19")	422.45.945
505 (20")	533 (21")	422.45.955

Supplied With 1 Interlocking slide (3641), 1 Non-interlocking slide (3642), 2 Mounting rails, 1-12" Aluminum rod, 1 Mounting hardware kit

Note Must order in multiples of 2.

→ Gang Lock System, optional

> Material: Steel

Finish	Item No.
zinc-plated	422.45.000

Supplied With
AC610 bracket, Installation instructions

Flat head screws	pages 12.7-12.8, 12.10, 12.13
Varianta screws	page 12.16

Dimensional data not binding. Dimensions in mm, inches are approximate. We reserve the right to alter specifications without notice.

Accuride Full Extension, Telescopic

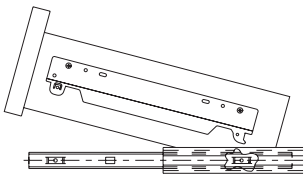

> Weight capacity: max. 90 kg (200 lbs.)/pair
> For drawers: max. 1067 mm (42") wide
> Hold-in detent
> Adapter rail mount disconnect
> Oversized ball bearings for heavy loads
> Features unhanded slides
> With 25.4 mm (1") overtravel
> For large store fixtures, library, and institutional furniture applications
> Material: Steel; Finish: zinc-plated

→ 3640-A Side Mounted

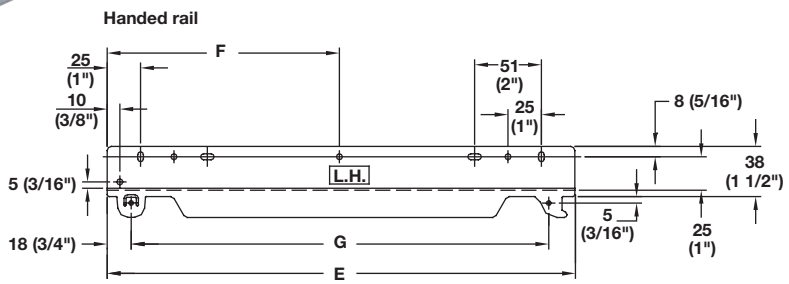

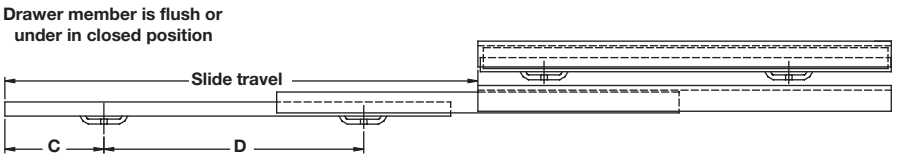

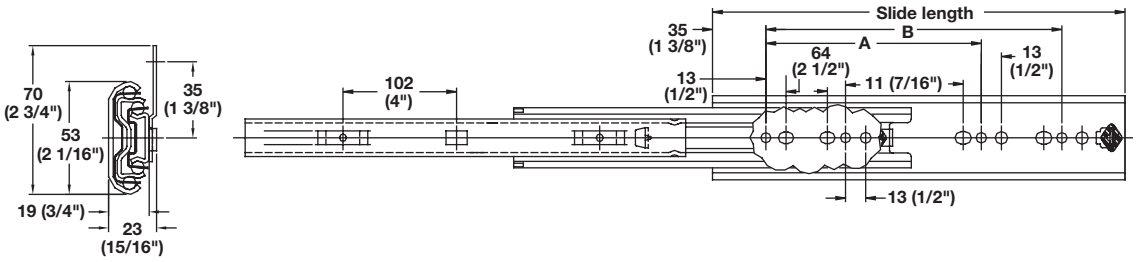

Installed length	Extension length	A	B	C	D	E	F	G	Item No.
305 (12")	330 (13")	224 (8 13/16")	-	25 (1")	216 (8 1/2")	254 (10")	-	216 (8 1/2")	422.07.300
356 (14")	381 (15")	224 (8 13/16")	-	25 (1")	216 (8 1/2")	254 (10")	-	216 (8 1/2")	422.07.350
406 (16")	432 (17")	224 (8 13/16")	320 (12 19/32")	25 (1")	216 (8 1/2")	254 (10")	-	216 (8 1/2")	422.07.401
457 (18")	483 (19")	224 (8 13/16")	352 (13 55/64")	38 (1 1/2")	267 (10 1/2")	305 (12")	-	267 (10 1/2")	422.07.456
508 (20")	533 (21")	224 (8 13/16")	416 (16 3/8")	38 (1 1/2")	267 (10 1/2")	305 (12")	-	267 (10 1/2")	422.07.509
559 (22")	584 (23")	320 (12 19/32")	416 (16 3/8")	51 (2")	318 (12 1/2")	355 (14")	178 (7")	318 (12 1/2")	422.07.554
610 (24")	635 (25")	320 (12 19/32")	480 (18 29/32")	51 (2")	318 (12 1/2")	355 (14")	178 (7")	318 (12 1/2")	422.07.607
660 (26")	686 (27")	320 (12 19/32")	544 (21 13/32")	64 (2 1/2")	394 (15 1/2")	432 (17")	216 (8 1/2")	394 (15 1/2")	422.07.652
711 (28")	737 (29")	320 (12 19/32")	608 (23 15/16")	64 (2 1/2")	394 (15 1/2")	432 (17")	216 (8 1/2")	394 (15 1/2")	422.07.705

Supplied With
Mounting screws

Dimensional data not binding. Dimensions in mm, inches are approximate. We reserve the right to alter specifications without notice.

Accuride Full Extension

→ 7957/7950 Side/Bottom Mounted

> Weight capacity max./pair: Side mounted: 159 kg (350 lbs.)
> Flat mounted: 68 kg (150 lbs.)
> For drawers: max. 1067 mm (42") wide
> Handed lever disconnect on 7957
> Bridged ball retainer prevents retainer migration
> Use as heavy duty weight rating for wide drawers in kitchens, store fixtures and institutional storage applications
> BHMA and AWI certified to Grade 1 HD-100
> Material: Steel, electro-plated

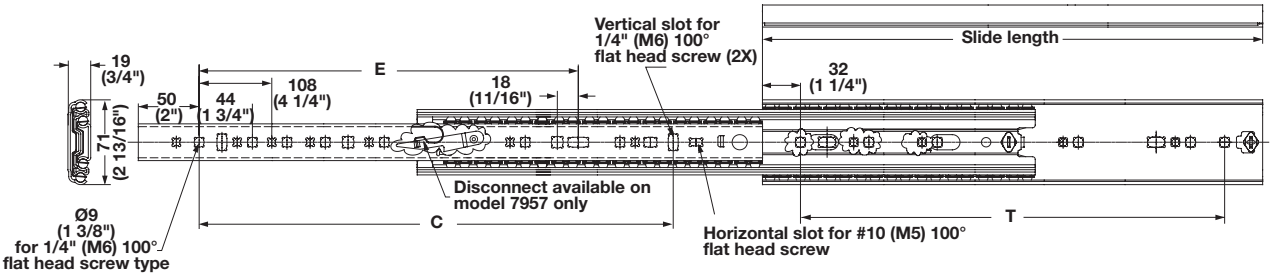

Slide length/travel	E	C	T	Model 7950 NON disconnect	Model 7957 With disconnect
305 (12")	-	178 (7")	241 (9 1/2")	432.49.931	432.48.831
356 (14")	-	229 (9")	292 (11 1/2")	432.48.936	432.48.836
406 (16")	-	279 (11")	343 (13 1/2")	432.48.941	432.48.841
457 (18")	-	330 (13")	393 (15 1/2")	432.48.946	432.48.846
508 (20")	-	381 (15")	445 (17 1/2")	432.48.951	432.48.851
559 (22")	330 (13")	432 (17")	495 (19 1/2")	432.48.956	432.48.856
610 (24")	381 (15")	483 (19")	546 (21 1/2")	432.48.961	432.48.861
660 (26")	432 (17")	533 (21")	597 (23 1/2")	432.48.966	432.48.866
711 (28")	483 (19")	584 (23")	647 (25 1/2")	432.48.971	432.48.871
762 (30")	533 (21")	635 (25")	698 (27 1/2")	432.48.976	432.48.876
813 (32")	584 (23")	686 (27")	749 (29 1/2")	432.48.981	432.48.881
864 (34")	635 (25")	737 (29")	800 (31 1/2")	432.48.986	432.48.886
914 (36")	686 (27")	787 (31")	851 (33 1/2")	432.48.991	432.48.891

Note
Screws are not included.
7957 slides are handed. Do not mix left/right.

Flat head screws pages 12.7-12.8, 12.10, 12.13

Dimensional data not binding. Dimensions in mm, inches are approximate. We reserve the right to alter specifications without notice.

Accuride Full Extension

Side mount Applications
- Pantry pull-outs
- Printer platforms
- Tray installations

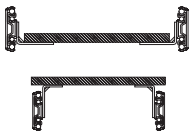

Bottom mount Applications
- TV pull-outs
- Entertainment unit shelving
- Heavy-duty storage platforms

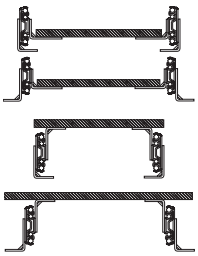

> Extra heavy duty
> Enhanced to deliver a weight capacity: up to 272 kg (600 lbs.)
> BHMA and AWI certified to Grade 1 HD-100
> Material: Steel, electro-plated

Applications	Weight capacity maximum	Drawer widths
Moderate use	272 kg (600 lbs.)	up to 24"
Frequent use	217 kg (480 lbs.)	up to 42"
Mobile (Vehicular)	163 kg (360 lbs.)	up to 32"
Flat mount	81 kg (180 lbs.)	up to 32"

→ 9301E Non-disconnect

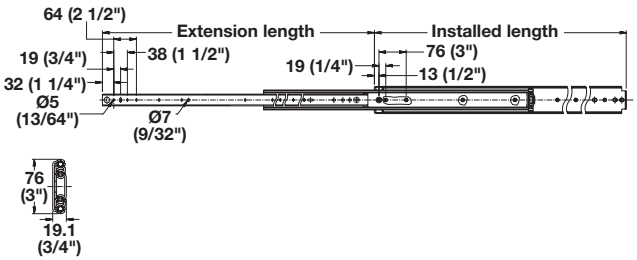

Installed / extension length	Packing	Item No.
254 (10")	4	422.10.620
305 (12")	4	422.10.630
356 (14")	4	422.10.635
406 (16")	4	422.10.640
457 (18")	4	422.10.645
508 (20")	4	422.10.650
559 (22")	4	422.10.655
610 (24")	2	422.10.660
660 (26")	2	422.10.665
711 (28")	2	422.10.670
762 (30")	2	422.10.675
813 (32")	2	422.10.680
864 (34")	2	422.10.685
914 (36")	2	422.10.690
1016 (40")	2	422.10.691
1066 (42")	2	422.10.692
1219 (48")	1	422.10.695
1524 (60")	1	422.10.698

Note
This slide is not intended to support human weight as injury may result.
Mounting hardware not included

Platform Bracket Kit Ordering Information

Brackets allow for two mounting options:

1. The slide's outer member attaches to the side of the cabinet and the bracket attaches to the slide's inner member.
2. One bracket attached to slide outer member and cabinet base; other attached to slide inner member and platform.

Brackets are unhanded and accomodate all slide lengths used individually or in combination. See the chart below:

Material: Steel, plated

Slide length	Bracket kit size				Qty. of kits required per pair of slides	
	305 (12")	406 (16")	559 (22")	711 (28")		
	422.10.001	422.10.003	422.10.006	422.10.009	Side mount	Bottom mount
305–356 (12"–14")	•				1	2
406–508 (16"–20")		•			1	2
559–660 (22"–26")			•		1	2
711–813 (28"–32")				•	1	2
864–914 (34"–36")	•				2	4
1016–1067 (40"–42")	•		•		1 of ea.	2 of ea.
1219 (48")	•			•	1 of ea.	2 of ea.
1824 (60")			•	•	1 of ea.	2 of ea.

Note
Hardware customer supplied. 1/4" lag or #10 flat head or #10 carriage bolt for diamond and square holes.

Dimensional data not binding. Dimensions in mm, inches are approximate. We reserve the right to alter specifications without notice.

Accuride 3/4 Extension

→ 2109 Top Mounted/Suspended Under Surface

- > Weight capacity: 34 kg (75 lbs.)/pair
- > For drawers: max. 406 mm (16") wide
- > With lever disconnect
- > Hold-in and hold-out detents
- > Features mounting brackets that are height adjustable and reversible
- > For computer keyboard, printer shelf and pencil drawer applications
- > Material: Steel; Finish: black

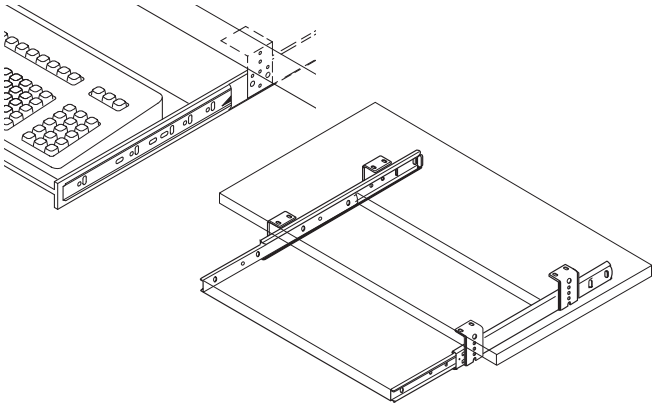

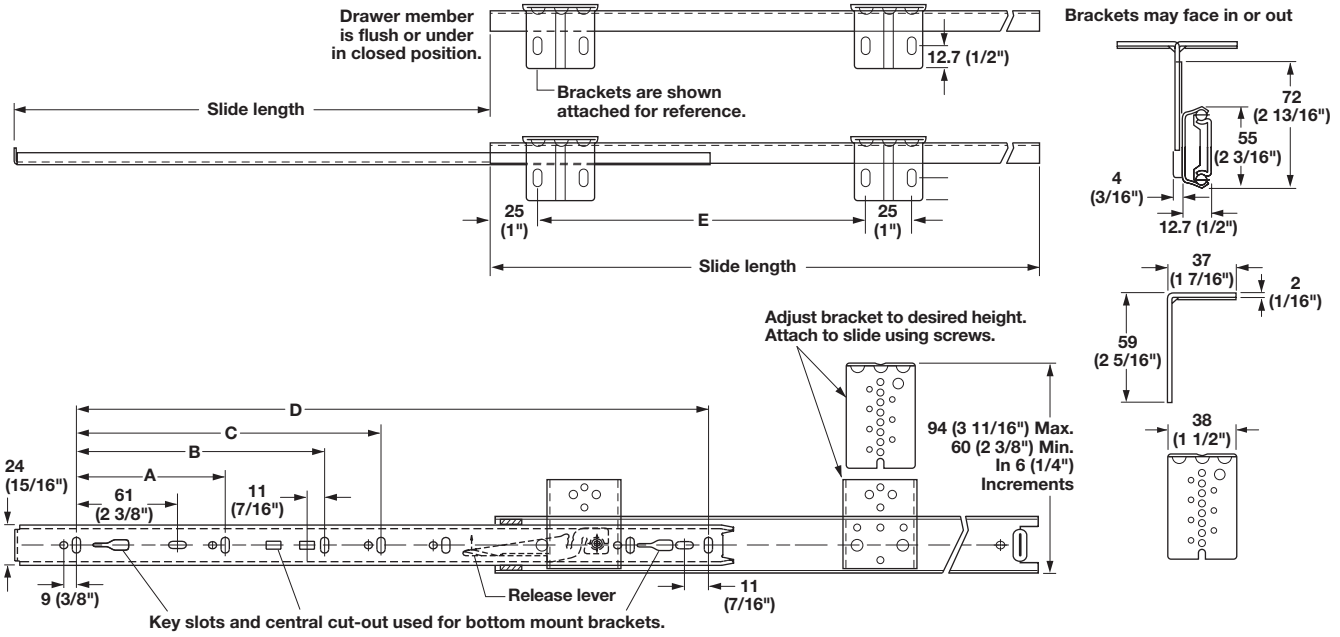

Slide length	Slide travel	A	B	C	D	E	Item No.
300 (12")	205 (8")	96 (3 7/8")	–	–	242 (9 1/2")	215 (8 1/2")	422.14.300
350 (14")	260 (10 1/4")	128 (5")	–	–	292 (11 1/2")	215 (8 1/2")	422.14.335
400 (15 3/4")	281 (11")	128 (5")	–	–	342 (13 1/2")	215 (8 1/2")	422.14.340
450 (17 3/4")	331 (13")	128 (5")	224 (8 13/16")	–	392 (15 7/16")	215 (8 1/2")	422.14.345
500 (19 11/16")	376 (14 3/4")	128 (5")	224 (8 13/16")	–	442 (17 7/16")	292 (11 1/2")	422.14.350
550 (21 21/32")	415 (16 3/8")	128 (5")	224 (8 13/16")	320 (12 5/8")	492 (19 3/8")	292 (11 1/2")	422.14.355

Supplied with
Mounting screws

Dimensional data not binding. Dimensions in mm, inches are approximate. We reserve the right to alter specifications without notice.

Accuride Two-Way, 3/4 Extension

→ 2002 Side Mounted

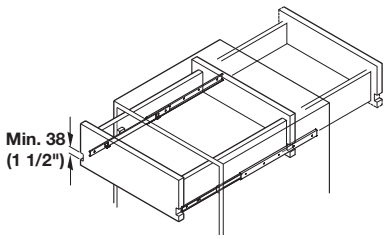

- > Weight capacity: 22 kg (50 lbs.)/pair
- > Maximum drawer width: 305 mm (12")
- > Internal detent screws in center position
- > Non-disconnect
- > Use where access is needed from both sides of the unit
- > Designed especially for installation in room dividers, kitchen islands, medical carts, pass-through shelves
- > Material: Steel; Finish: zinc-plated

Installed length	Extension length	Item No.
457 (18")	323 (12 3/4")	422.15.458
508 (20")	374 (14 3/4")	422.15.501
559 (22")	399 (15 3/4")	422.15.556
610 (24")	425 (16 3/4")	422.15.609

Supplied With
Mounting screws

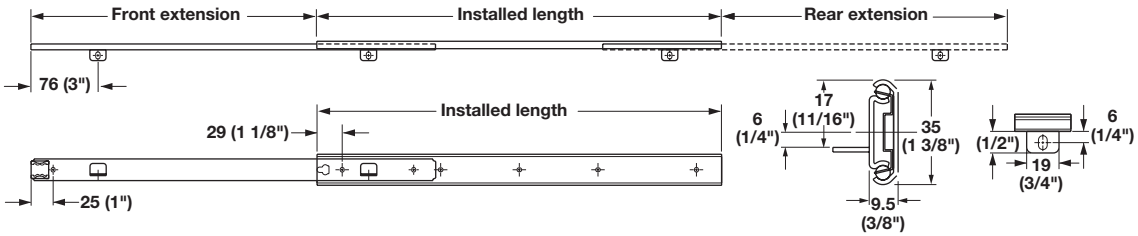

Dimensional data not binding. Dimensions in mm, inches are approximate. We reserve the right to alter specifications without notice.

Accuride Two-Way, Full Extension

→ 0363 Side Mounted

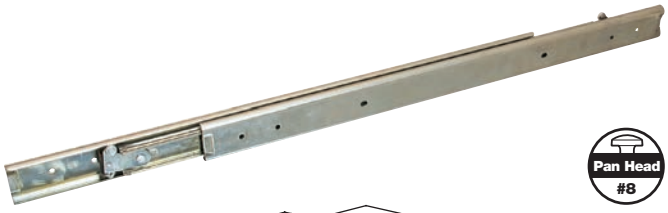

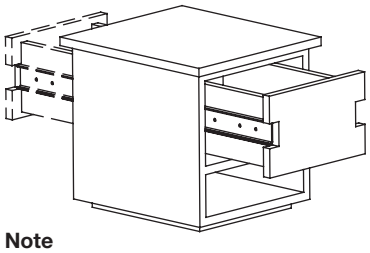

Note
Fronts must be notched.

- > Weight capacity: 45 kg (100 lbs.)/pair
- > For drawers: max. 457 mm (18") wide
- > Hold in detent at center provides easy positioning
- > Non-disconnect
- > Full extension from center point in both directions
- > Two-way travel provides access from both sides of cabinet
- > Ideal for kitchen islands, entertainment bars, or anywhere two-sided access is needed
- > Material: Steel; Finish: zinc-plated

Slide length	Slide travel	Item No.
400 (15 3/4")	432 (17")	420.13.903
500 (19 11/16")	532 (21")	420.13.905
600 (23 5/8")	632 (25")	420.13.907
700 (27 9/16")	732 (29")	420.13.909

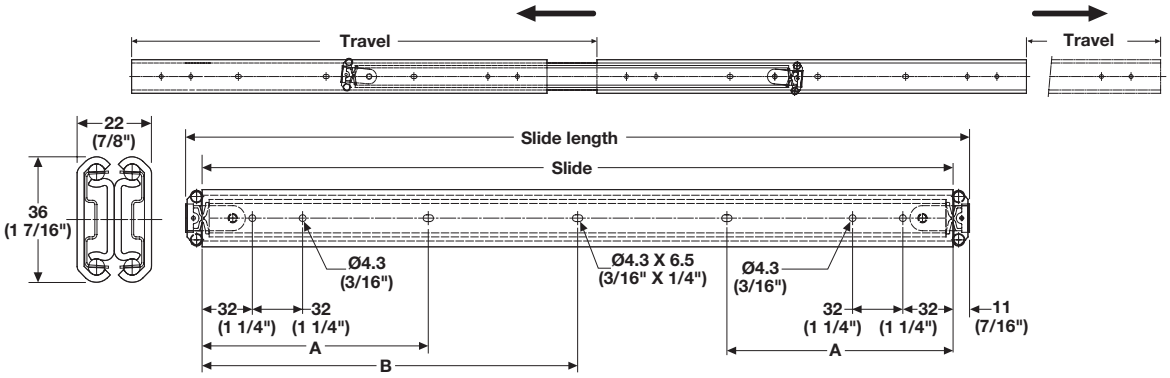

Pan head screws pages 12.9-12.10

Dimensional data not binding. Dimensions in mm, inches are approximate. We reserve the right to alter specifications without notice.

Accuride Pull-Out Shelf Slide

→ 322 Side Mounted

> Weight capacity: 45 kg (100 lbs.)/pair
> For drawers: max. 406 mm (16") wide
> Non-disconnect
> With 22 mm (7/8") overtravel
> For use in kitchen appliance drawers, pan shelves, and entertainment center shelves
> Material: Steel, zinc-plated

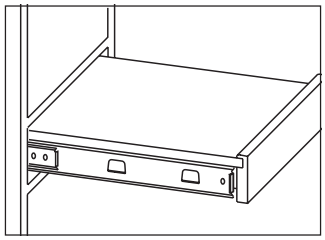

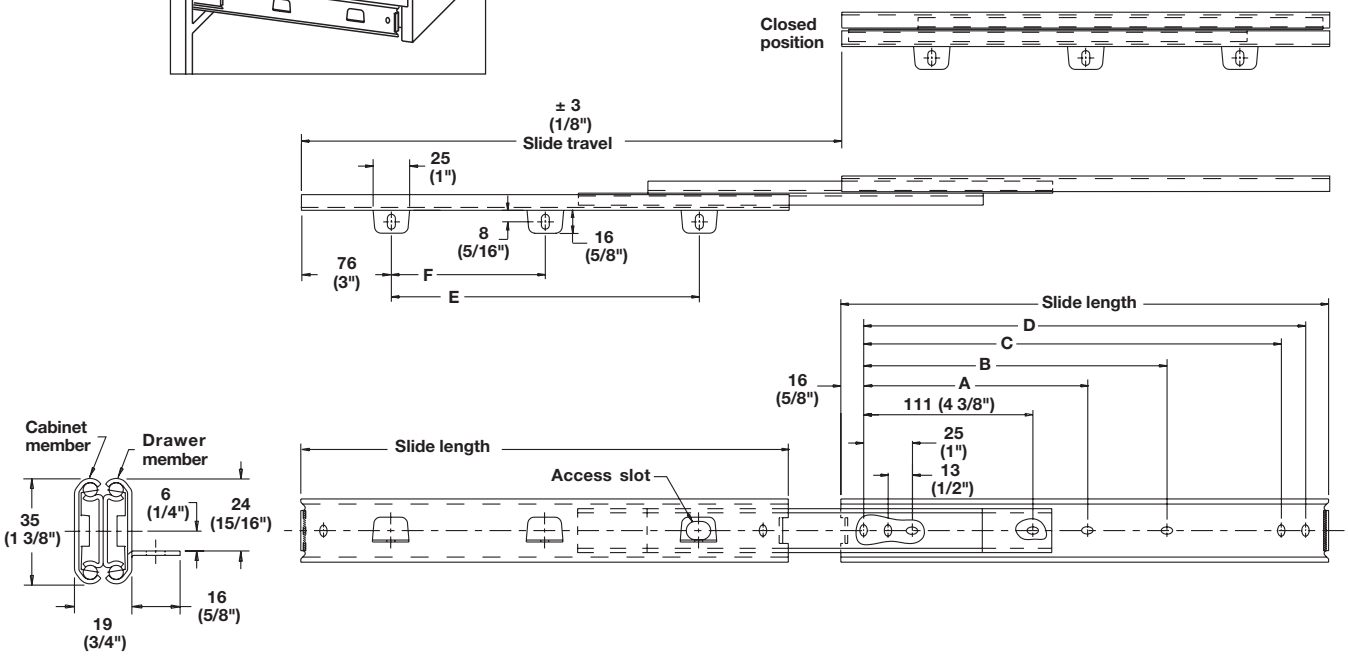

Installed length	Extension length	A	B	C	D	F	Item No.
305 (12")	327 (12 7/8")	-	149 (5 7/8")	260 (10 1/4")	273 (10 3/4")	-	422.69.930
356 (14")	378 (14 7/8")	-	200 (7 7/8")	311 (12 1/4")	324 (12 3/4")	-	422.69.935
406 (16")	429 (16 7/8")	-	251 (9 7/8")	362 (14 1/4")	375 (14 3/4")	-	422.69.940
457 (18")	480 (18 7/8")	213 (8 3/8")	301 (11 7/8")	413 (16 1/4")	426 (16 3/4")	-	422.69.945
508 (20")	530 (20 7/8")	238 (9 3/8")	353 (13 7/8")	464 (18 1/4")	476 (18 3/4")	-	422.69.950
559 (22")	581 (22 7/8")	264 (10 3/8")	403 (15 7/8")	514 (20 1/4")	527 (20 3/4")	203 (8")	422.69.955
610 (24")	632 (24 7/8")	289 (11 3/8")	454 (17 7/8")	565 (22 1/4")	578 (22 3/4")	229 (9")	422.69.960

Supplied With
Mounting screws

Dimensional data not binding. Dimensions in mm, inches are approximate. We reserve the right to alter specifications without notice.

Riverso, Full Extension, Synchronized

> Weight capacity: 40 kg (88 lbs.)
> With soft close
> For kitchen and closet islands, shop counters, healthcare settings, room dividers and laboratories
> Items stored in the drawer can be accessed from two sides/rooms/areas, saving time and increasing efficiency
> The unique drawer can be opened from both sides and the front overlays the rest of the unit on the closed side for a uniform appearance
> Tipmatic push-to-open system can be added to one side, allowing the drawer to be opened without a handle
> Mounts on reinforced intermediate shelf
> Unit width: 550–915 mm (21 5/8"–36")
> Interior height: min./max. 89–216 mm (3 1/2"–8 1/2")
> Adjustment: Side: +/_ 1.5 mm; Height: + 3.5 mm; Depth: -1/+3 mm
> Material: Steel, galvanized

Slide length	Item No.
530–609 (20 7/8"–23 15/16")	433.30.901
610–759 (24"–29 7/8")	433.30.902
760–900 (29 15/16"–35 3/8")	433.30.903

→ Tipmatic Soft Close for Riverso

	Item No.
	433.30.909

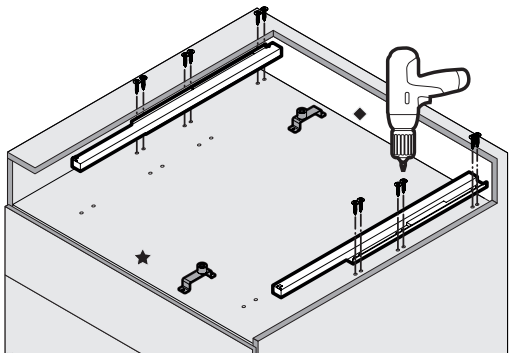

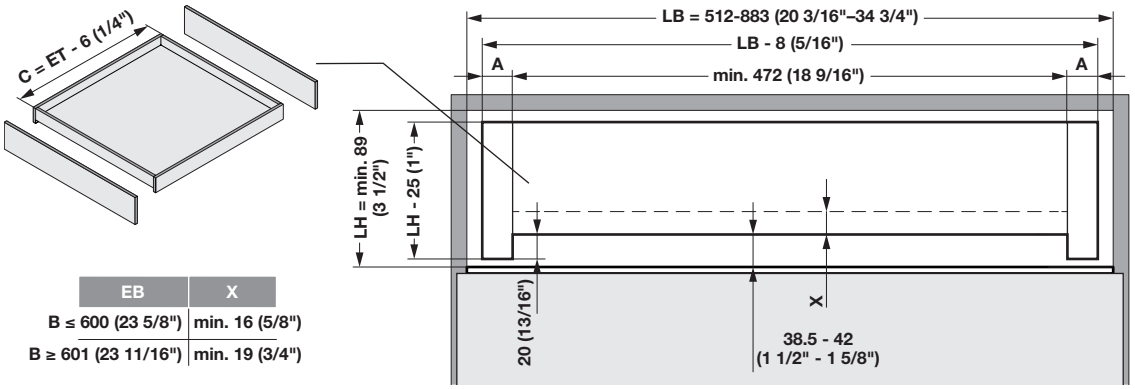

EB	X
B ≤ 600 (23 5/8")	min. 16 (5/8")
B ≥ 601 (23 11/16")	min. 19 (3/4")

Flat head screws pages 11.132-11.133, 11.135

Dimensional data not binding. Dimensions in mm, inches are approximate. We reserve the right to alter specifications without notice.

This page is left blank intentionally.

Dimensional data not binding. Dimensions in mm, inches are approximate. We reserve the right to alter specifications without notice.

Accuride Full Extension, Lock-Out

→ 340 Side Mounted

> Weight capacity: 50 kg (110 lbs.)/pair
> For drawers: max. 457 mm (18") wide
> Handed slide, lock-out in the extended position
> Easy disconnects for removal and/or cleaning
> Ideal for butcher blocks, cutting boards and work surface shelves
> Material: Steel, zinc-plated

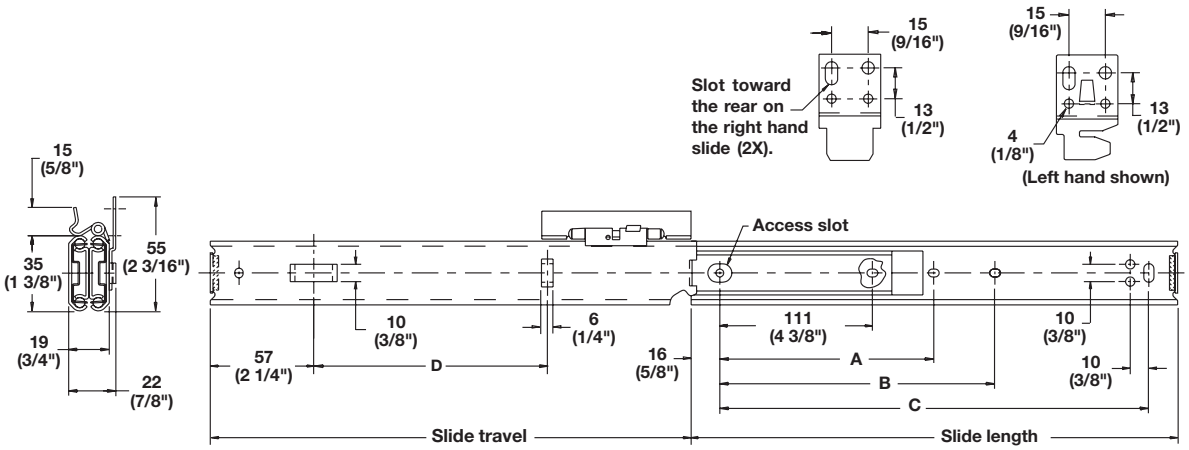

Installed length	Slide travel	A	B	C	D	Item No.
406 (16")	403 (15 7/8")	-	251 (9 7/8")	374 (14 3/4")	267 (10 1/2")	422.94.940
457 (18")	454 (17 7/8")	213 (8 3/8")	302 (11 7/8")	425 (16 3/4")	318 (12 1/2")	422.94.945
559 (22")	556 (21 7/8")	264 (10 3/8")	403 (15 7/8")	527 (20 3/4")	419 (16 1/2")	422.94.955

Supplied With
4 Brackets
Mounting screws

Dimensional data not binding. Dimensions in mm, inches are approximate. We reserve the right to alter specifications without notice.

Accuride Over Extension

→ 301-2590 Base Mounted

- > Weight capacity: 38.5-67 kg (85-150 lbs.)
- > For drawers: max. 406 mm (16") wide
- > Features hold-in detent
- > Non-disconnect
- > With top and bottom mounting brackets
- > With 22 mm (7/8") overtravel
- > For kitchen pantry slide-out units, TV shelves, store fixtures, and institutional furniture applications
- > Material: Steel; Finish: zinc-plated

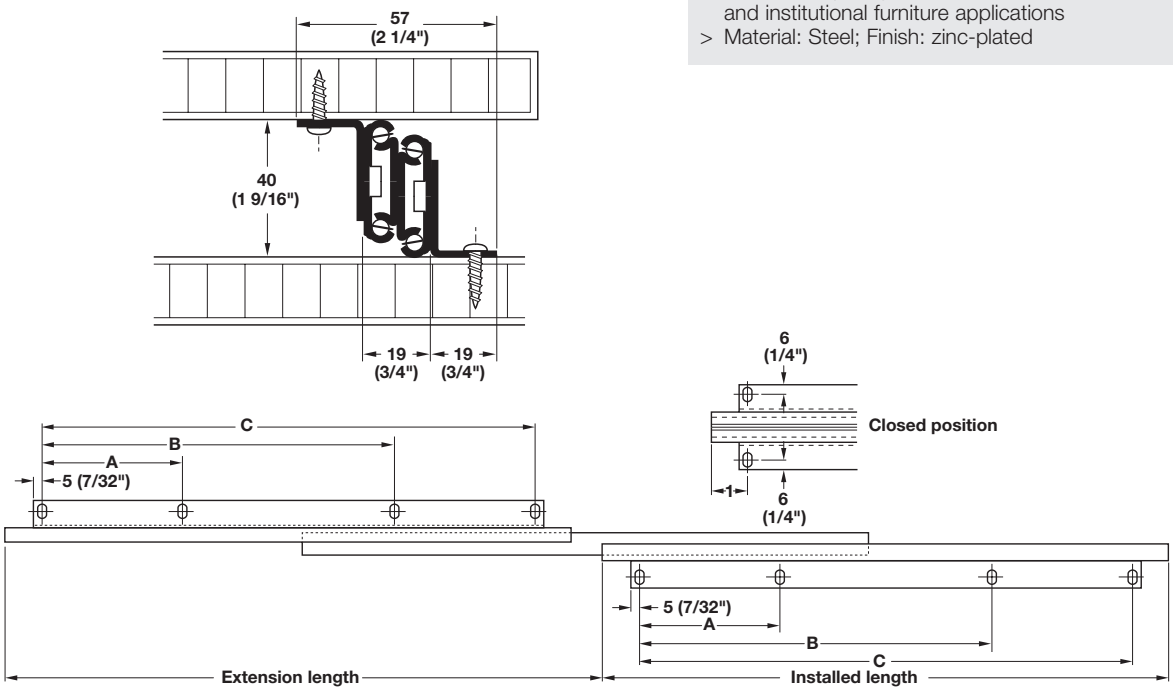

Installed length	Extension length	Weight capacity	A	B	C	Item No.
356 (14")	377 (14 7/8")	67 kg (148 lbs.)	102 (4")	203 (8")	305 (12")	422.08.310
406 (16")	429 (16 7/8")	63.5 kg (140 lbs.)	102 (4")	254 (10")	356 (14")	422.08.408
457 (18")	479 (18 7/8)	59 kg (130 lbs.)	102 (4")	305 (12")	406 (16")	422.08.453
508 (20")	530 (20 7/8")	55 kg (122 lbs.)	179 (7")	279 (11")	457 (18")	422.08.506
559 (22")	581 (22 7/8")	51 kg (113 lbs.)	179 (7")	330 (13")	508 (20")	422.08.551
610 (24")	631 (24 7/8")	47 kg (104 lbs.)	179 (7")	381 (15")	559 (22")	422.08.600
660 (26")	682 (26 7/8")	43 kg (95 lbs.)	179 (7")	432 (17")	610 (24")	422.08.650
711 (28")	732 (28 7/8")	38.5 kg (85 lbs.)	179 (7")	483 (19")	660 (26")	422.08.700

Supplied With
Mounting screws

Dimensional data not binding. Dimensions in mm, inches are approximate. We reserve the right to alter specifications without notice.

Accuride Full Extension, Self-closing

> Weight capacity: 80 kg (175 lbs.)/pair
> For drawers: max. 508 mm (20") wide
> 65 mm (2 1/2") self-closing action
> Lever disconnect
> Ideal for recycling bins or pantry pull-outs
> Material: Steel, plated

→ 3600-200 Side Mounted

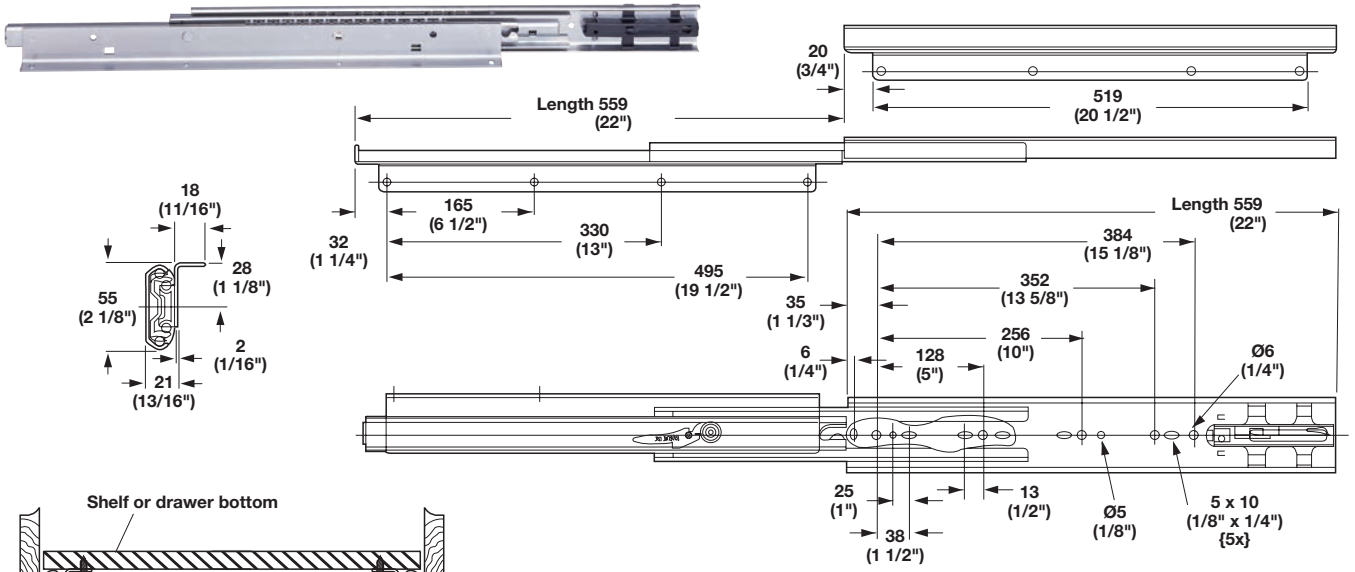

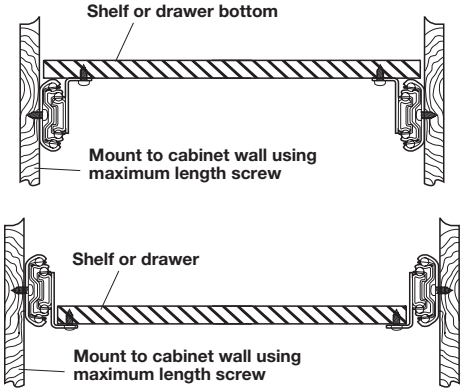

Installed and extension length	Item No.
559 mm (22")	420.86.967

Supplied With
Mounting screws

8

Drawer Slides

Dimensional data not binding. Dimensions in mm, inches are approximate. We reserve the right to alter specifications without notice.

Accuride Full Extension, Self-closing

> Weight capacity: 80 kg (175 lbs.)/pair
> For drawers: max. 406 mm (16") wide
> 65 mm (2 1/2") self-closing action
> Lever disconnect
> Fixed bottom and top mounting
> Ideal for recycling bins or pantry pull-outs
> Material: Steel; Finish: zinc-plated

→ 3600-201 Top/Bottom Mounted

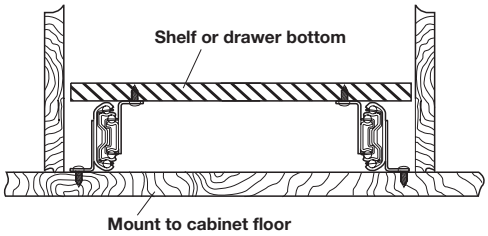

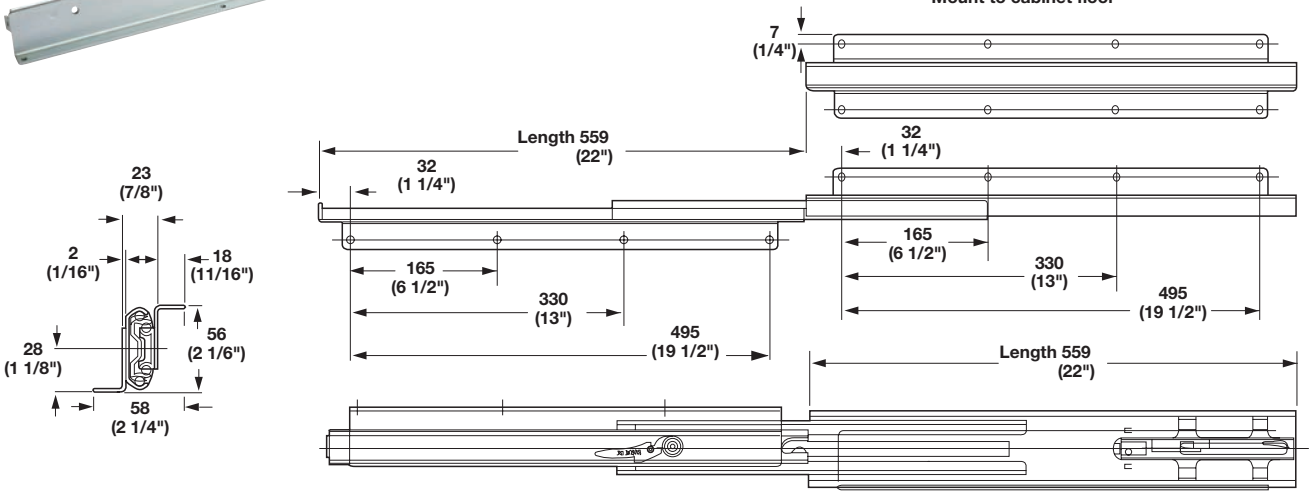

Installed and extension length	Item No.
559 mm (22")	420.86.968

Supplied With
Mounting screws

Dimensional data not binding. Dimensions in mm, inches are approximate. We reserve the right to alter specifications without notice.

Accuride 115RC

- > Linear Motion Track System is a unique movement solution consisting of lightweight aluminum tracks and re-circulating ball carriages which provide guidance, movement and positioning for screens, panels, partitions or other components in industrial, commercial and institutional applications
- > Weight capacity: 120 kg (265 lbs.)
- > Track available in two lengths: 1.2 m (47") and 2.4 m (94")
- > Corrosion-resistant track may be cut down to the desired length or butted together to extend to any length
- > Re-circulating ball carriages in two options:
  - Stainless Steel ball bearing carriage provides the greatest weight capacity
  - Polymer ball bearing carriage is grease-free with smooth and quiet movement
- > Tracks have drilling marks for both the fixing holes and end stops

Note
Weight should be evenly distributed across the carriage(s).

→ Flat Mount (carriage up)

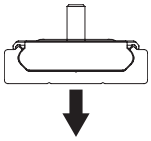

Stainless Steel ball carriage	
x1	29 kg (65 lbs.)
x2	54 kg (120 lbs.)
x3	70 (155 lbs.)
Polymer ball carriage	
x1	18 kg (40 lbs.)
x2	32 kg (70 lbs.)
x3	41 kg (90 lbs.)

→ Flat Mount (carriage down)

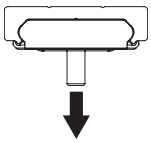

Stainless Steel ball carriage	
x1	41 kg (90 lbs.)
x2	70 (155 lbs.)
x3	90 (200 lbs.)
Polymer ball carriage	
x1	23 kg (50 lbs.)
x2	41 kg (90 lbs.)
x3	54 kg (120 lbs.)

→ Side Mount

Stainless Steel ball carriage	
x1	50 kg (110 lbs.)
x2	90 kg (200 lbs.)
x3	170 (265 lbs.)
Polymer ball carriage	
x1	29 kg (65 lbs.)
x2	54 kg (120 lbs.)
x3	72 kg (160 lbs.)

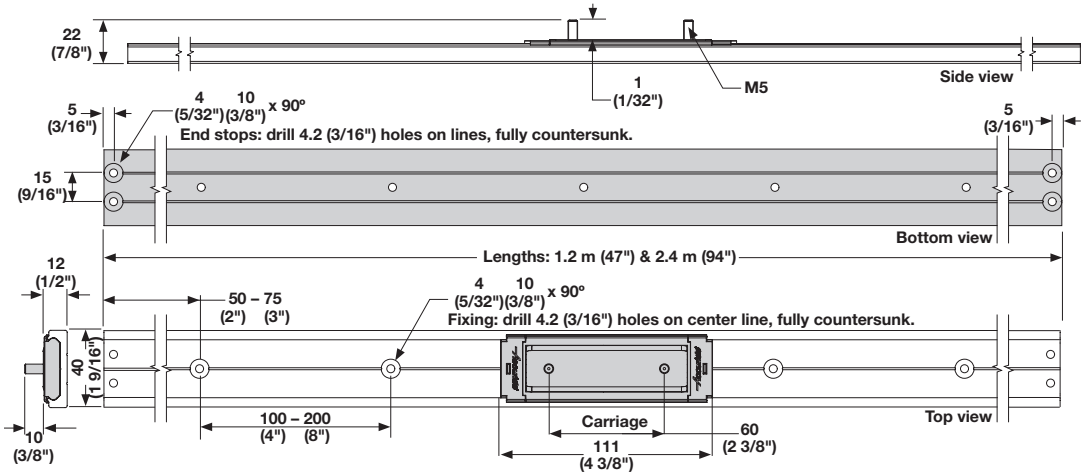

8

Drawer Slides

Dimensional data not binding. Dimensions in mm, inches are approximate. We reserve the right to alter specifications without notice.

Accuride 115RC

→ Track

> Material: Aluminum 6000 series

Length	Item No.
1.2 m (47")	421.59.100
2.4 m (94")	421.59.101

→ End Stop

> Material: Aluminum

	Item No.
	421.59.500

Supplied With
2 Screws

→ Hardware Kit, optional

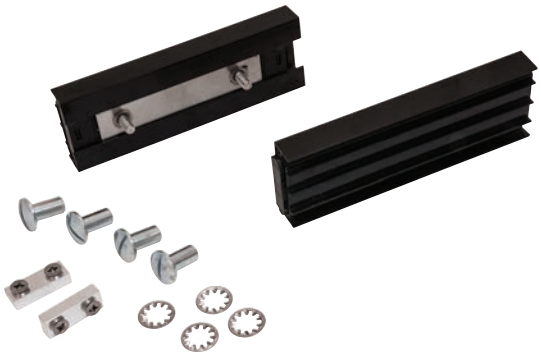

	Item No.
	421.59.522

Note
Weight capacity is based on the type and number of ball carriages. Due to the extensive variety of applications and possible orientations for this product, we recommend that customers first test this product in the intended application. This product is not recommended for high-torque applications.

→ Carriages

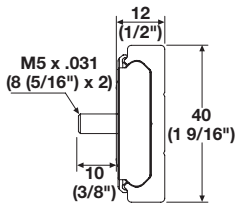

Material	Item No.
Stainless Steel	421.59.801
Polymer	421.59.805

→ Easy Close Kit, optional

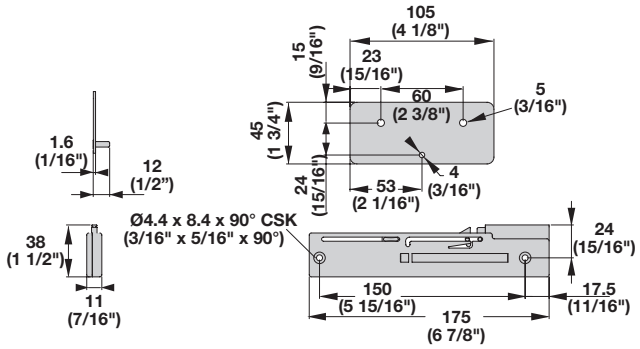

	Item No.
	421.59.521

Dimensional data not binding. Dimensions in mm, inches are approximate. We reserve the right to alter specifications without notice.

304 Stainless Steel, Full Extension

→ ESR-3813 Side Mounted

> Weight capacity: 29–42 kg (64–98 lbs.)/pair
> 12 mm (1/2") side space required
> Profile height: 37 mm (1 1/2")
> Lever disconnect
> Hold-in detent
> Not rated for MRI
> Material: 304 Stainless Steel, passivated

Note
M4 or #8 pan head screws are recommended.

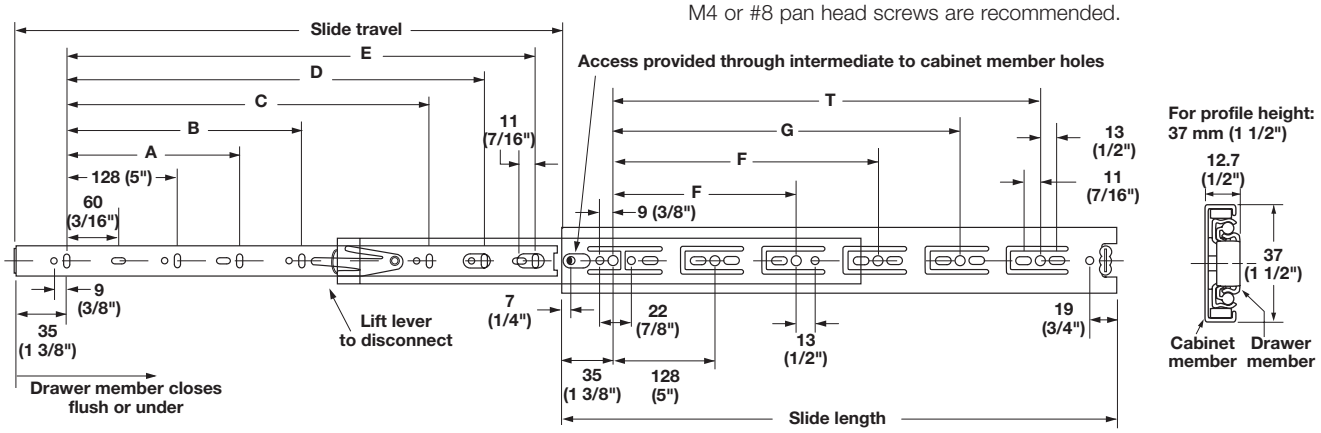

Length	Travel	Weight per/pair	A	B	C	D	E	F	G	T	Item No.
250 (9 7/8")	243 (10")	42 kg (92 lbs.)	-	-	-	-	192 (7 9/16")	-	-	-	420.42.025
300 (11 13/16")	305 (12")	40 kg (88 lbs.)	-	-	-	-	242 (9 1/2")	224 (13/16")	-	-	420.42.030
350 (13 3/4")	355 (14")	38 kg (84 lbs.)	-	-	-	-	292 (11 1/2")	224 (13/16")	-	-	420.42.035
400 (15 3/4")	406 (16")	36 kg (79 lbs.)	-	-	-	-	342 (13 1/2")	224 (13/16")	320 (2 5/8")	-	420.42.040
450 (17 3/4")	457 (18")	34 kg (75 lbs.)	-	-	320 (2 5/8")	-	392 (15 1/2")	224 (13/16")	352 (2 5/8")	-	420.42.045
500 (19 11/16")	508 (20")	33 kg (73 lbs.)	-	-	320 (2 5/8")	-	442 (17 1/2")	224 (13/16")	416 (16 3/8")	-	420.42.050
550 (21 11/16")	559 (22")	31 kg (68 lbs.)	-	-	320 (2 5/8")	416 (16 3/8")	492 (19 1/2")	224 (13/16")	352 (2 5/8")	448 (17 5/8")	420.42.055
600 (23 11/16")	610 (24")	29 kg (64 lbs.)	224 (13/16")	-	416 (16 3/8")	-	542 (21 1/2")	224 (13/16")	352 (2 5/8")	480 (18 7/8")	420.42.060

Pan head screws	pages 12.9-12.10
M4 screws	page 12.17

Dimensional data not binding. Dimensions in mm, inches are approximate. We reserve the right to alter specifications without notice.

304 Stainless Steel, Full Extension

→ ESR-4513 Side Mounted

> Weight capacity: 40–52 kg (87–115 lbs.)/pair
> 12 mm (1/2") side space required
> Profile height: 45 mm (1 3/4")
> Lever disconnect
> Hold-in detent
> Not rated for MRI
> Material: 304 Stainless Steel, passivated

Note
M4 or #8 pan head screws are recommended.

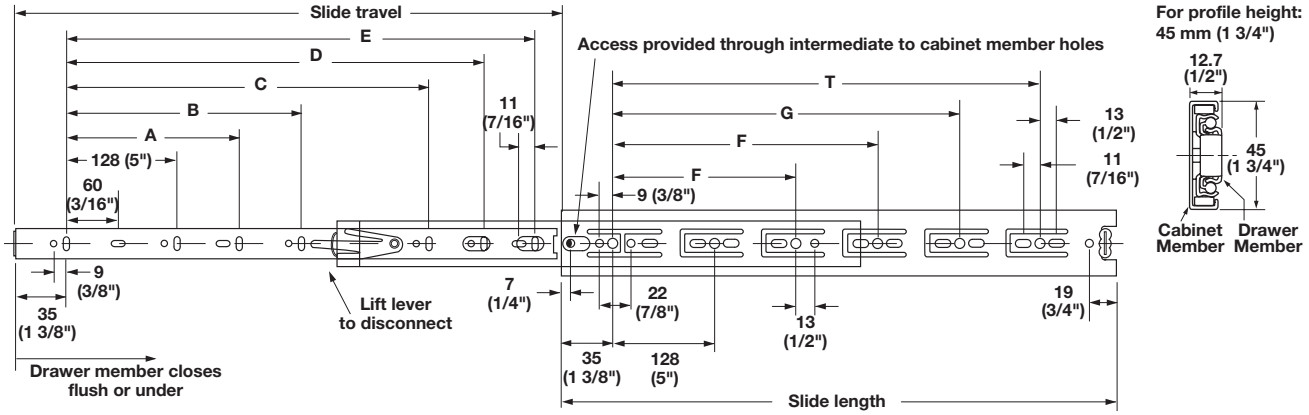

Length	Travel	Weight per/pair	A	B	C	D	E	F	G	T	Item No.
250 (9 7/8")	243 (10")	52 kg (115 lbs.)	-	-	-	-	192 (7 9/16")	-	-	-	420.43.025
300 (11 13/16")	305 (12")	50 kg (111 lbs.)	-	-	-	-	242 (9 1/2")	224 (13/16")	-	-	420.43.030
350 (13 3/4")	355 (14")	49 kg (108 lbs.)	-	-	-	-	292 (11 1/2")	224 (13/16")	-	-	420.43.035
400 (15 3/4")	406 (16")	47 kg (104 lbs.)	-	-	-	-	342 (13 1/2")	224 (13/16")	320 (2 5/8")	-	420.43.040
450 (17 3/4")	457 (18")	46 kg (100 lbs.)	-	-	320 (2 5/8")	-	392 (15 1/2")	224 (13/16")	352 (2 5/8")	-	420.43.046
500 (19 11/16")	508 (20")	44 kg (97 lbs.)	-	-	320 (2 5/8")	-	442 (17 1/2")	224 (13/16")	416 (16 3/8")	-	420.43.050
550 (21 11/16")	559 (22")	43 kg (95 lbs.)	-	-	320 (2 5/8")	416 (16 3/8")	492 (19 1/2")	224 (13/16")	352 (2 5/8")	448 (17 5/8")	420.43.055
600 (23 11/16")	610 (24")	42 kg (92 lbs.)	224 (13/16")	-	416 (16 3/8")	-	542 (21 1/2")	224 (13/16")	352 (2 5/8")	480 (18 7/8")	420.43.060
650 (25 1/2")	660 (26")	41 kg (90 lbs.)	224 (13/16")	-	416 (16 3/8")	544 (21 3/8")	592 (23 5/16")	224 (13/16")	352 (2 5/8")	544 (21 3/8")	420.43.065
700 (27 1/2")	711 (28")	40 kg (88 lbs.)	224 (13/16")	288 (11 5/16")	416 (16 3/8")	544 (21 3/8")	642 (25 9/32")	224 (13/16")	352 (2 5/8")	544 (21 3/8")	420.43.070

Pan head screws	pages 12.9-12.10
M4 screws	page 12.17

Dimensional data not binding. Dimensions in mm, inches are approximate. We reserve the right to alter specifications without notice.

Häfele Full Extension

→ Econo Slide

BHMA

> Weight capacity: 45 kg (100 lbs.)/pair
> Lever disconnect
> Side clearance: 12 mm (1/2")
> Height: 45 mm (1 3/4")
> Tested in accordance with ANSI/BHMA and WI
> Material: Steel

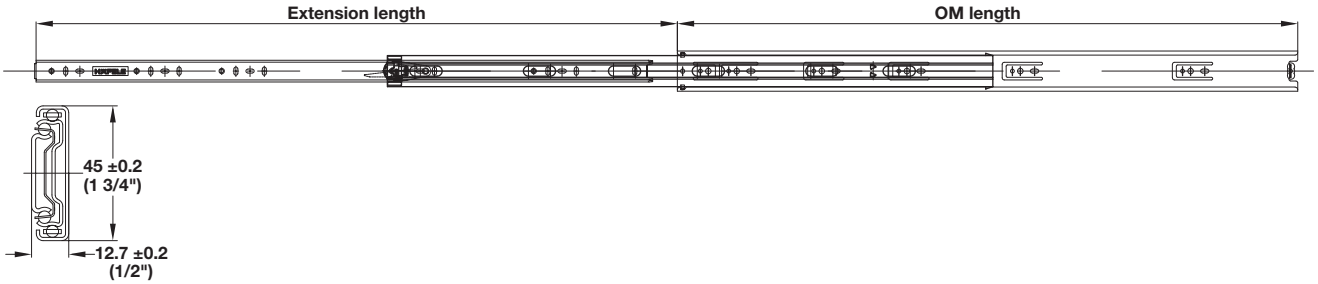

Length	Drawer member black	Cabinet member black	Drawer member zinc	Cabinet member zinc	Paired black	Paired zinc
250 (9 13/16")	432.21.510	432.21.500	432.21.560	432.21.550	432.21.370	432.21.970
300 (11 13/16")	432.21.511	432.21.501	432.21.561	432.21.551	432.21.371	432.21.971
350 (13 3/4")	432.21.512	432.21.502	432.21.562	432.21.552	432.21.372	432.21.972
400 (15 3/4")	432.21.513	432.21.584	432.21.563	432.21.583	432.21.984	432.21.983
450 (17 11/16")	432.21.514	432.21.504	432.21.564	432.21.554	432.21.374	432.21.974
500 (19 11/16")	432.21.515	432.21.505	432.21.565	432.21.555	432.21.375	432.21.975
550 (21 5/8")	432.21.516	432.21.506	432.21.566	432.21.556	432.21.376	432.21.976
600 (23 5/8")	432.21.517	432.21.507	432.21.567	432.21.557	432.21.377	432.21.977
650 (25 9/16")	432.21.518	432.21.508	432.21.568	432.21.558	432.21.378	432.21.978
700 (27 9/16")	432.21.519	432.21.509	432.21.569	432.21.559	432.21.379	432.21.979

Supplied With 5 pair per box, each pair polybagged; Cabinet member: 50 pcs. per box; Drawer member: 100 pcs. per box

Note Pallet quantities available upon request.

→ Face Frame Rear Bracket

> Material: Steel

Finish	Item No.
zinc-plated	553.31.990

→ Rear Socket Adjustable Bracket, R/L

> Weight capacity: 100 lbs.
> For use with Häfele Econo Slides in a face frame application
> Allows the drawer to self-adjust
> 12.7 (1/2") left to right adjustability
> Tested and passed BHMA/ANSI cabinet hardware test AI56, section 4.11, test 10, grade non-handed
> Pan head screw mount or staple
> L x W x H: 115 x 60 x 90 mm (4 1/2" x 2 3/8" x 3 9/16")
> Material: Plastic; Color: white

Handing	Item No.
Right	422.59.004
Left	422.59.005

Pan head screws pages 12.9-12.10

Dimensional data not binding. Dimensions in mm, inches are approximate. We reserve the right to alter specifications without notice.

Full Extension

→ Econo Slide C4520-SC

> Weight capacity: 45 kg (100 lbs.)/pair
> Side clearance: 12 mm (1/2")
> Lengths: 300–700 mm (12"–28")
> With soft close
> 1 year manufacturer's warranty

> Material: Steel; Finish: electro zinc-plated

Length	Item No.
300 (12")	432.44.981
355 (14")	432.44.982
406 (16")	432.44.983
457 (18")	432.44.984
508 (20")	432.44.985
558 (22")	432.44.986
609 (24")	432.44.987
660 (26")	432.44.988
711 (28")	432.44.989

Supplied With
10 pair/carton

→ Rear Face Frame Bracket

> Material: Steel

	Item No.
	432.44.990

→ Rear Socket Adjustable Bracket, R/L

> Material: Plastic; Color: white

Handing	Item No.
Right	422.59.004
Left	422.59.005

→ Ball Bearing Screws

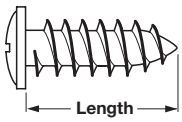

> Shallow head for ball bearing slides
> #2 Phillips drive
> Thread type: full
> #8 x 7/16"
> Material: Steel; Finish: zinc-plated

	Item No.
	013.09.901

Supplied With
1,000 pcs.

Dimensional data not binding. Dimensions in mm, inches are approximate. We reserve the right to alter specifications without notice.

Partial Extension

→ Mini Slide

> Suitable for the needs of furniture manufacturers
> 17 mm (11/16") groove/side mounted
> Lateral play is eliminated when groove mounted
> Ball mounted single-stage extension/partial extension
> M4 screw is sufficient to secure the guide rail in the drawer groove
> DM presses into groove in drawer box at 7 mm (9/32") depth
> Outside drawer box width = ICW- 6 mm (1/4") (3 mm (1/8") side clearance on CM)
> Material: Steel; Finish: zinc-plated

Note
A M4 metal screw is sufficient to secure the guide rail in the drawer groove.

No additional fastening is required, since the load imposed by the drawer is carried by the groove.

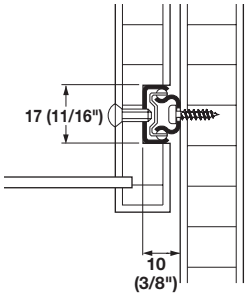

Drawer length	DM/CM	Extension loss	Item No.
370–410 (14 9/16"–16 1/8")	243/247 (9 9/16"/9 11/16")	77 (3 1/8")	420.58.511
470–510 (18 1/2"–20 1/16")	311/311 (12 1/4"/12 1/4")	113 (4 9/16")	420.58.512
520–560 (20 1/2"–22 1/16")	335/343 (13 3/16"/13 1/2")	113 (4 9/16")	420.58.513

Supplied With
50 pairs/box

Dimensional data not binding. Dimensions in mm, inches are approximate. We reserve the right to alter specifications without notice.

Over Extension, Self-Closing, Premium

→ Bottom Mounted

- > Weight capacity: max. 68 kg (150 lbs.)/pair
- > Patented middle rail reinforcement, buffer and pull-out prevention clip
- > High lateral stability due to specially designed profiles
- > Special cabinet rail shape prevents scraping of the rollers
- > Middle rail return prevention
- > 2 quiet-action rollers, 6 friction bearing-mounted nylon rollers
- > Double captive
- > Material: Steel, epoxy-coated; Color: white RAL 9010

Installed length	Extended length	Item No.
500 (20")	540 (21 1/4")	423.46.751
550 (22")	570 (22 1/2")	423.46.756

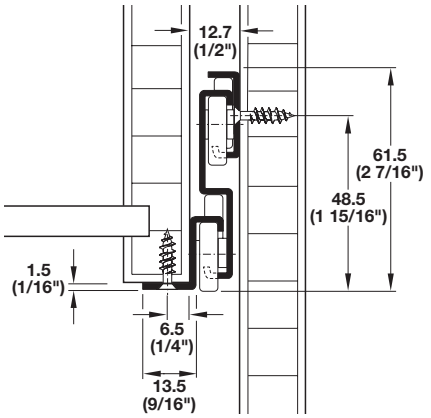

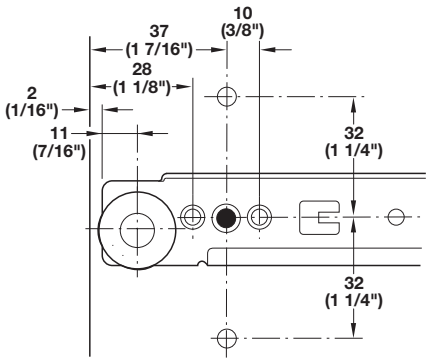

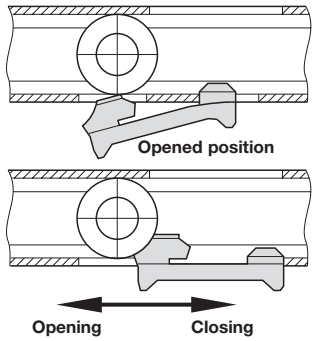

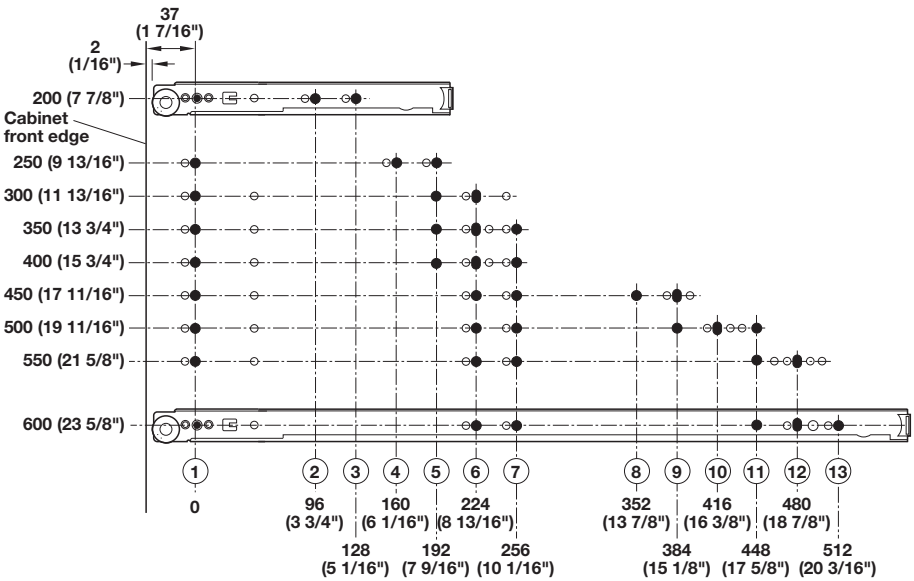

Varianta screws page 12.16

Dimensional data not binding. Dimensions in mm, inches are approximate. We reserve the right to alter specifications without notice.

3/4 Extension, Self-Closing, Bottom Mounted

> Dynamic weight capacity: max. 20 kg (44 lbs.)/pair
> Side clearance: 13 mm (1/2")
> Material: Steel, powder-coated

→ Complete Sets

Installed length	brown RAL 8017	white RAL 9003
300 (12")	423.37.161	423.37.761
350 (14")	423.37.162	423.37.762
400 (16")	-	423.37.763
450 (18")	-	423.37.764
500 (20")	423.37.165	423.37.765
550 (22")	-	423.37.766
600 (24")	-	423.37.767

→ Separate Members

> Finish: white RAL 9003

Installed length	Drawer member right	Drawer member left	Cabinet member right	Cabinet member left
350 (14")	423.37.810	423.37.811	423.37.830	423.37.831
400 (16")	423.37.812	423.37.813	423.37.832	423.37.833
450 (18")	423.37.814	423.37.815	423.37.834	423.37.835
500 (20")	423.37.816	423.37.817	423.37.836	423.37.837
550 (22")	423.37.818	423.37.819	423.37.838	423.37.839
600 (24")	423.37.820	423.37.821	423.37.840	423.37.841

Supplied With
100 pcs.

Varianta screws page 12.16

Dimensional data not binding. Dimensions in mm, inches are approximate. We reserve the right to alter specifications without notice.

Soft Closing Mechanism

→ For Epoxy and Ball Bearing Slides

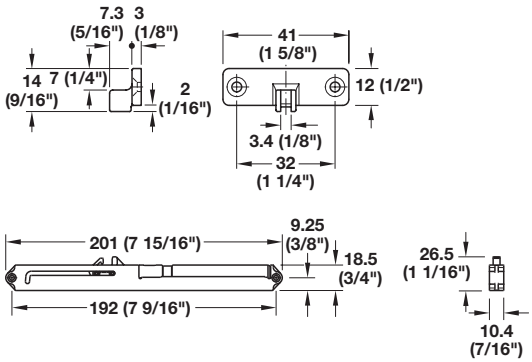

> Weight capacity: 25 kg (55 lbs.) one-sided installation
> 50 kg (110 lbs.) two-sided installation
> With follower for wood drawer box
> Can be retrofitted for single extension runners
> Barely visible so furniture design remains unchanged
> User friendly gentle closing action
> Material: Plastic

Color	Item No.
light gray/black	432.13.507

Note
One or two-sided installation is determined by the width, running properties and weight capacity of the runners. Always use 2 mechanisms for drawers wider than 400 mm (15 3/4") or if the drawer depth exceeds the width.

Installation

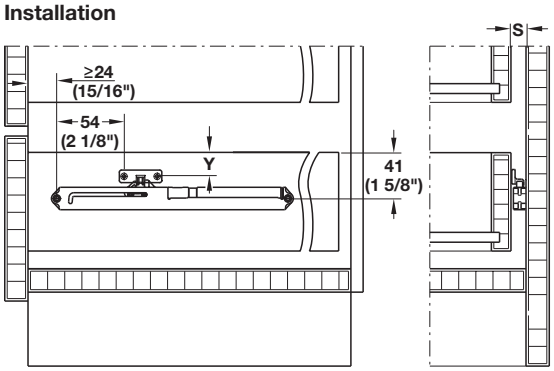

Side spacing = 12 to 15 (1/2" to 9/16")

Dimensional data not binding. Dimensions in mm, inches are approximate. We reserve the right to alter specifications without notice.

Drawer Slide Spacers

→ Drawer Slide Spacer

> 2 mounting holes spaced 32 mm (1 1/4") apart
> With 1 hole for euro screw and 2 holes for #6 wood screws
> Material: Plastic; Color: white

Size	Item No.
12 (1/2")	037.93.764
19 (3/4")	037.93.766
25 (1")	037.93.769
32 (1 1/4")	037.93.771
38 (1 1/2")	037.93.772

→ Drawer Slide Spacer Block

> For undermount slides
> Material: Plastic; Color: white

Size	Item No.
25 (1")	037.93.774
38 (1 1/2")	037.93.775

→ Drawer Slide Spacer

> Used with slide-out trays mounted to base of cabinet
> 6 mm (1/4") hole and 5 mm (13/64") peg for 32 mm (1 1/4") apart
> With 1 hole for euro screw and 2 holes for #6 wood screws
> Material: Plastic; Color: white

Size	Item No.
32 (1 1/4")	037.93.773

→ Distance Spacers

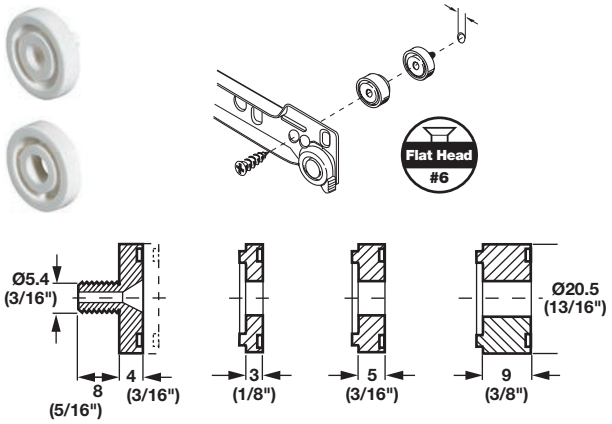

> Screw mounted in Ø5 mm (3/16") system holes (stackable)
> Material: Plastic

Size	Item No.
4 with dowel, 5	037.93.708
3	037.93.717
5	037.93.726
9	037.93.735

Flat head screws pages 12.7-12.8, 12.10, 12.13

Dimensional data not binding. Dimensions in mm, inches are approximate. We reserve the right to alter specifications without notice.

For Epoxy Slides

→ Rear Mounting Brackets

> For self-closing slides
> Material: Plastic

Color	Item No.
natural	421.86.920

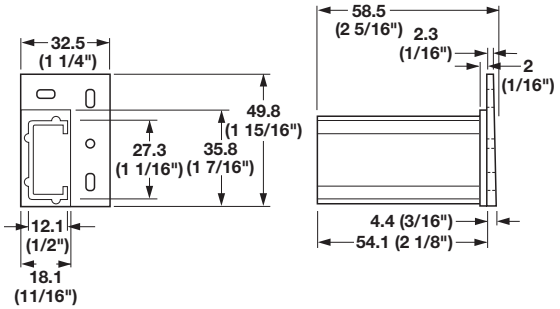

→ Drawer Guide Locating Tool

> For locating pilot holes for all brands of drawer guides, European and American
> Light-weight aluminum to a ± .005" tolerance, insuring proper guide positioning
> Positions guides for overlay and inset conditions
> Install 1 to 4 guides in a single operation
> Use Euro Bit self-centering tool to drill pilot holes, 8 mm (7/64") for wood screws, 5 mm (3/16") for varianta screws
> 730 mm (28 3/4") length designed to clear existing counter tops
> Material: Aluminum, Polycarbonate, Steel

	Item No.
	001.34.200

Note
Order Euro Bit self-centering tool separately.

Dimensional data not binding. Dimensions in mm, inches are approximate. We reserve the right to alter specifications without notice.

Side Mounted 3/4 Extension

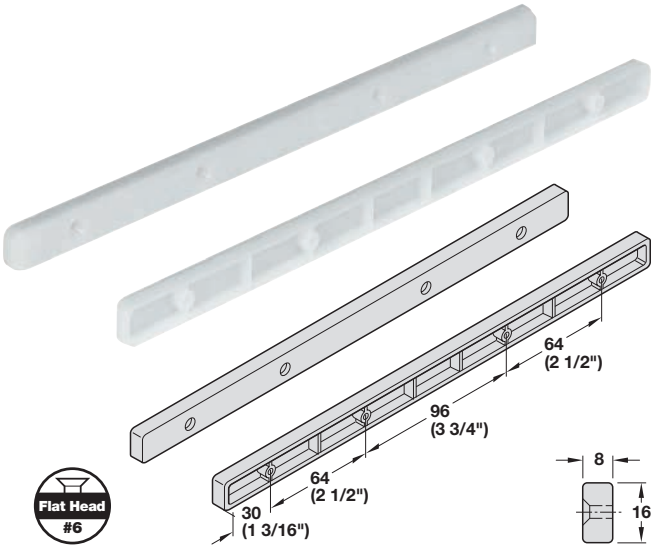

> Screw mounted
> For drawers with a 17 mm (11/16") groove
> Length: 285 mm (11 1/4")
> Material: Plastic

Color	Item No.
white	430.15.701

→ Drawer Stop

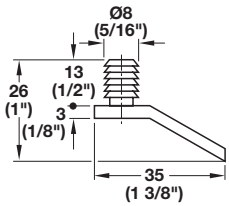

To remove drawer, press the stop lever upward.

> Prevents unintentional, complete extension of the drawer out of the cabinet
> Press-fit
> Material: Plastic

Color	Item No.
white	430.09.150

Installation

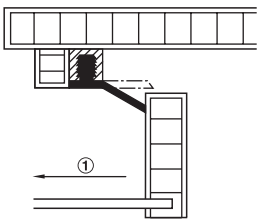

① **Pull-out direction**

Press drawer stopper upwards to release the drawer.

Flat head screws pages 12.7-12.8, 12.10, 12.13

Dimensional data not binding. Dimensions in mm, inches are approximate. We reserve the right to alter specifications without notice.

Salice

→ Stabilizer for Drawers

> To be installed on both right and left sides of the drawer
> Cam adjustment to allow a perfect bearing of the wheels to the cabinet sides
> Improves the overall stability of the drawer
> Material: Steel, galvanized

	Set pack	Bulk
	553.41.698	433.17.050

Supplied With
2 Mounting plates
2 Roller carriages
Mounting instructions

Bulk Supplied With
300 pcs.

Dimensional data not binding. Dimensions in mm, inches are approximate. We reserve the right to alter specifications without notice.

QuikTray™

> Easy installation
> Quick and simple tool-free adjustment and repositioning
> Works with epoxy, ball bearing, concealed undermount slides, and Matrix Box
> For 511 mm (20 1/8") supports, the maximum recommendation is 3 drawers at 34 kg (75 lbs.) each
> A great solution for pantry roll-out shelves
> Hook dowels attach to slides to hook onto QuikTray supports

→ 25 mm (1") Pilaster

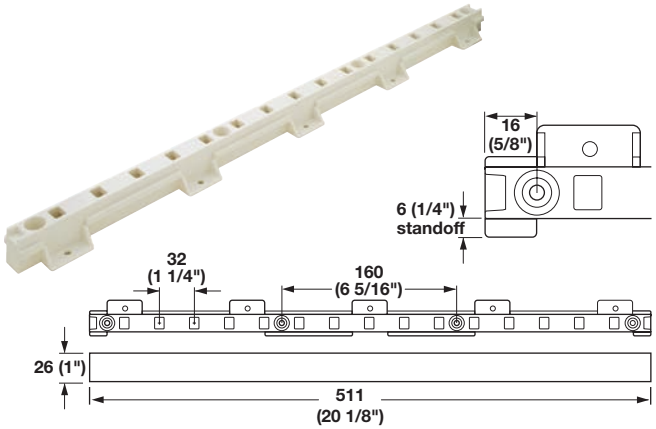

> Common for frameless cabinets with hinges
> With 6 mm (1/4") standoff
> Material: Plastic

Color	Item No.
white	431.01.710
cream	431.01.410

Supplied With
4 Supports
20 Mounting screws
8 Hook dowels
8 Mounting screws for hook dowels

→ 33 mm (1 1/4") Pilaster

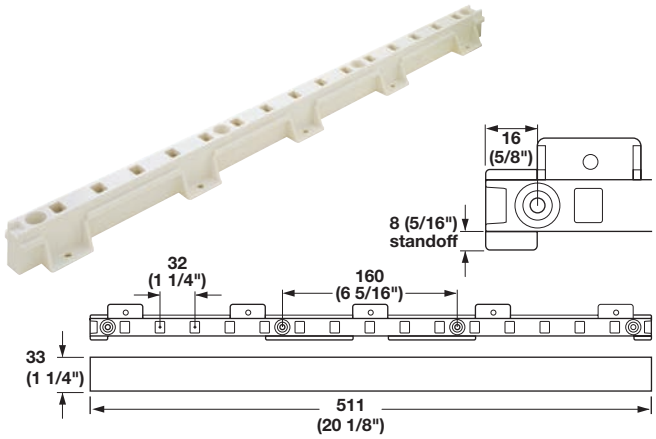

> 33 mm (1 1/4") face frame application
> With 8 mm (5/16") standoff
> Material: Plastic

Color	Item No.
white	431.01.711
cream	431.01.411

Supplied With
4 Supports
20 Mounting screws
8 Hook dowels
8 Mounting screws for hook dowels

→ 51 mm (2") Pilaster

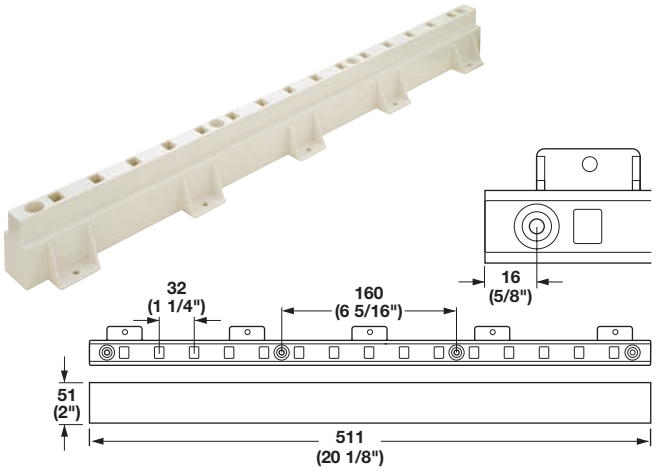

> Large hinge application
> Material: Plastic

Color	Item No.
white	431.01.712
cream	431.01.412

Supplied With
4 Supports
20 Mounting screws
8 Hook dowels
8 Mounting screws for hook dowels

Dimensional data not binding. Dimensions in mm, inches are approximate. We reserve the right to alter specifications without notice.

QuikTray™

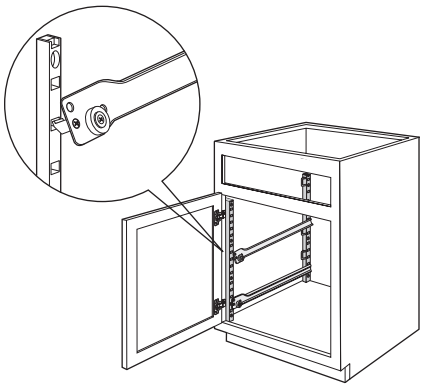

> Hook dowels attach to slides to hook onto QuikTray supports

Adjustment/Repositioning:
1. Remove tray.
2. Tilt up drawer slide to disengage hook dowel and remove from support.
3. Reposition slide at desired location and re-insert tray.

→ Hook Dowel

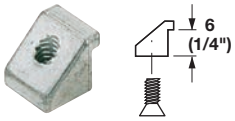

> For undermount slides and Matrix Box
> Material: Zinc, unfinished

	Item No.
	431.01.693

Supplied With
8 Hook dowels
8 Self-tapping screws

→ Bumper

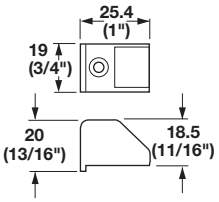

> Material: Plastic

Color	Item No.
white	431.01.781
beige	431.01.581

Supplied With
2 Bumpers
2 Mounting screws

→ Hook Dowel

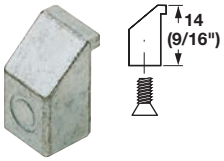

> Material: Zinc, unfinished

	Item No.
	431.01.695

Supplied With
4 Hook dowels
4 Self-tapping screws

→ Bumper

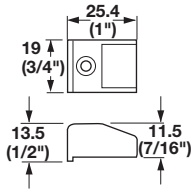

> Material: Plastic

Color	Item No.
white	431.01.780
beige	431.01.580

Supplied With
2 Bumpers
2 Mounting screws

Dimensional data not binding. Dimensions in mm, inches are approximate. We reserve the right to alter specifications without notice.

Pilaster X-Series Bracket System Kits

> For roll-out trays
> Works with both side mount and undermount slides
> Pilasters can be cut and ripped if needed to accommodate any width cabinet
> Tool-free adjustability allows the shelves to be easily height adjusted
> Depth: 19 mm (3/4")
> Material: Maple; Brackets: Metal

→ Standard Height Kits

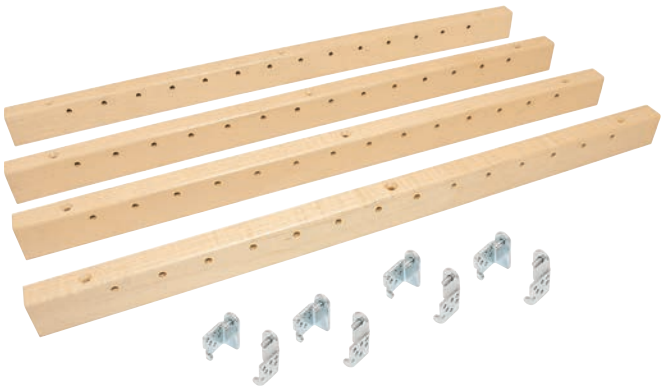

> Height: 530 mm (20 7/8")

Width	Single sets	Bulk
31 (1 1/4")	431.01.800	431.01.801
65 (2 1/2")	431.01.802	431.01.803

Supplied With
4 Pilasters and 8 Brackets with screws

Bulk Supplied With
40 Pilasters and 80 Brackets with screws

→ Full Height Kits

> Height: 710 mm (28")

Width	Item No.
31 (1 1/4")	431.01.810
65 (2 1/2")	431.01.812

Supplied With
4 Pilasters and 8 Brackets with screws

→ Pantry Height Kits

> Height: 1489 mm (58 5/8")

Width	Item No.
31 (1 1/4")	431.01.820
65 (2 1/2")	431.01.822

Supplied With
4 Pilasters and 20 Brackets with screws

→ Replacement Brackets

> Material: Metal

# Shelves	Item No.	Quantity
1	431.01.840	4
20	431.01.847	80
50	431.01.841	200
200	431.01.842	800

Supplied With
Screws

→ Jig

	Item No.
	431.01.843

Dimensional data not binding. Dimensions in mm, inches are approximate. We reserve the right to alter specifications without notice.

Brackets

> For concealed undermount slides
> Sleek design requires only 12 mm (1/2") frame offset
> Die-cast metal tapped insert with anti-slip surface

→ Face Frame Inset

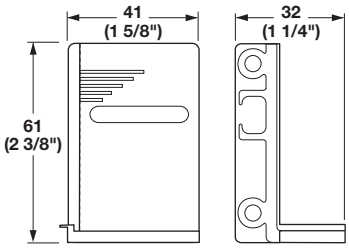

> Material: Glass-filled Polycarbonate

Color	Item No.
brown	431.01.598

Supplied With
1 set (L/R)
Mounting hardware

→ Face Frame Inset

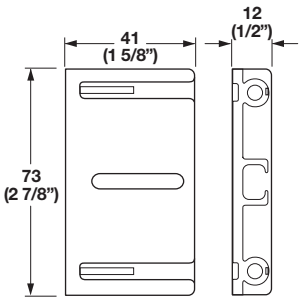

> Great for flush bottom cabinets
> Material: Glass-filled Polycarbonate

Color	Item No.
brown	431.01.597

Supplied With
1 set (L/R)
Mounting hardware

Dimensional data not binding. Dimensions in mm, inches are approximate. We reserve the right to alter specifications without notice.

Drawer Front Adjustment Fittings

→ Kolbe Korner

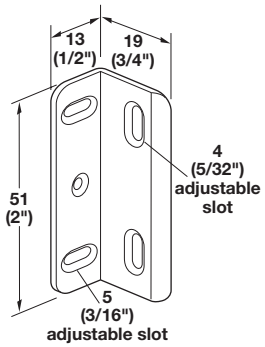

> 19 x 51 mm
> Material: Plastic/Polycarbonate

Color	50 pack	Bulk
white	260.26.760	260.26.761

> 19 x 38 mm
> Material: Steel

Finish	Bulk
tan	260.26.141

Bulk Supplied With
500 pcs.

→ Drawer Front Connector

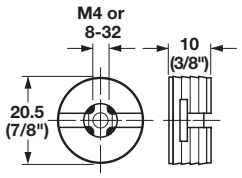

> Pressed in a 20 mm (3/16") hole in drawer front
> Allows for ± 2 mm (1/16") horizontal or vertical adjustment
> Material: Plastic; Color: natural

Version	Item No.
M4	430.90.704
8-32	430.90.713

→ Drawer Front Adjuster

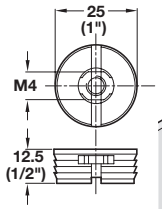

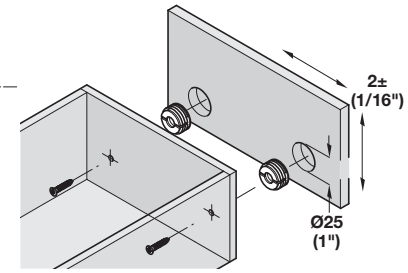

> One part drawer front adjusting fitting fits into a Ø25 mm (1") hole in the drawer front
> Only the screw head used to mount and adjust is visible
> The floating action inside the fitting allows for 2± mm (1/16") adjustment of the drawer front in two directions
> Material: Fitting: Plastic; Insert: Steel

Color	Item No.
white	430.90.323

M4/8-32 screws pages 12.17

Dimensional data not binding. Dimensions in mm, inches are approximate. We reserve the right to alter specifications without notice.

Full Extension

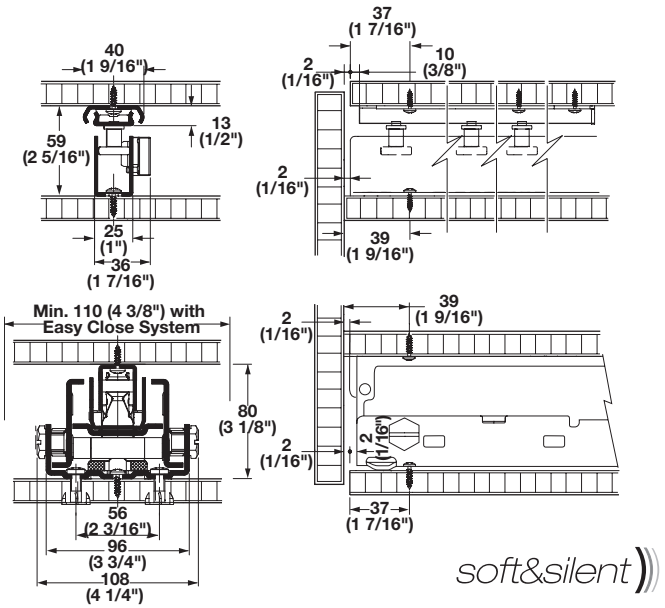

- > Weight capacity: 125 kg (275 lbs.)
- > Height: max. 2000 mm (78 3/4")
- > Width: max. 500 mm (19 3/4")
- > With soft close mechanism
- > Quiet movement, even under the heaviest loads
- > No deflection in fully extended position
- > Top slide provides lateral stability and adjustable outstop
- > Horizontal and vertical adjustment
- > Rear stop
- > Material: Slides: Steel, powder-coated; Finish: white; Rollers: Delrin

→ FR771A Top/Bottom Mounted

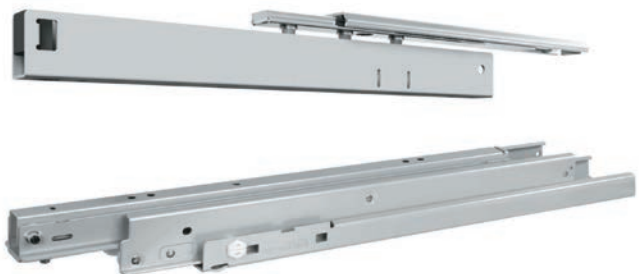

Length	Extension	Item No.
400 (15 3/4")	384 (15 1/8")	421.50.640
450 (17 11/16")	434 (17 1/16")	421.50.645
500 (19 11/16")	484 (19 1/16")	421.50.650
550 (21 5/8")	534 (21")	421.50.655
600 (23 5/8")	584 (23")	421.50.660
650 (25 9/16")	634 (24 15/16")	421.50.665
700 (27 9/16")	684 (26 15/16")	421.50.670

Dimensional data not binding. Dimensions in mm, inches are approximate. We reserve the right to alter specifications without notice.

Partial Extension

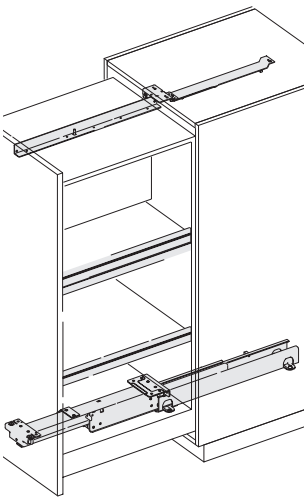

- > Weight capacity: 170 kg (374 lbs.)
- > 3 mm (+2/-1) height adjustment with adjusting screw, permitting alignment of the front panel
- > 8 ball bearing mounted plastic covered steel rollers
- > 2 friction bearing mounted steel rollers
- > 1 friction bearing mounted cylinder steel roller
- > Rubber buffers on the rails and runner ensure silent action
- > Return guide and retainer provide for the accurate closure of the cabinet pull-out safety stop
- > Material: Steel; Color: gray RAL 7035

→ HAWA Forte 170/340 Top/Bottom Mounted

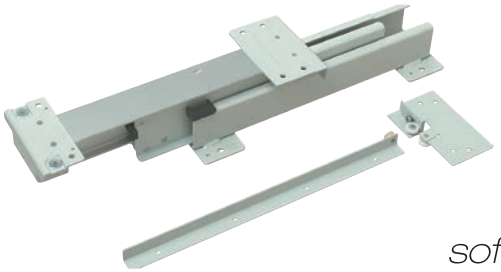

soft&silent

Installed length	Extension length	Item No.
*385 (15 3/16")	380 (14 15/16")	421.48.381
435 (17 1/8")	430 (16 15/16")	421.48.431
485 (19 1/16")	480 (18 7/8")	421.48.481
535 (21 1/16")	530 (20 7/8")	421.48.531
585 (23")	580 (22 13/16")	421.48.581
635 (25")	630 (24 13/16")	421.48.631
685 (27")	680 (26 3/4")	421.48.681
785 (30 15/16")	780 (30 11/16")	421.48.781
885 (34 13/16")	880 (34 5/8")	421.48.881
985 (38 3/4")	980 (38 9/16")	421.48.981
1085 (42 3/4")	1080 (42 1/2")	421.48.991

Supplied With
Top runner, Mounting instructions

Note
Damping is not possible on the shortest length.

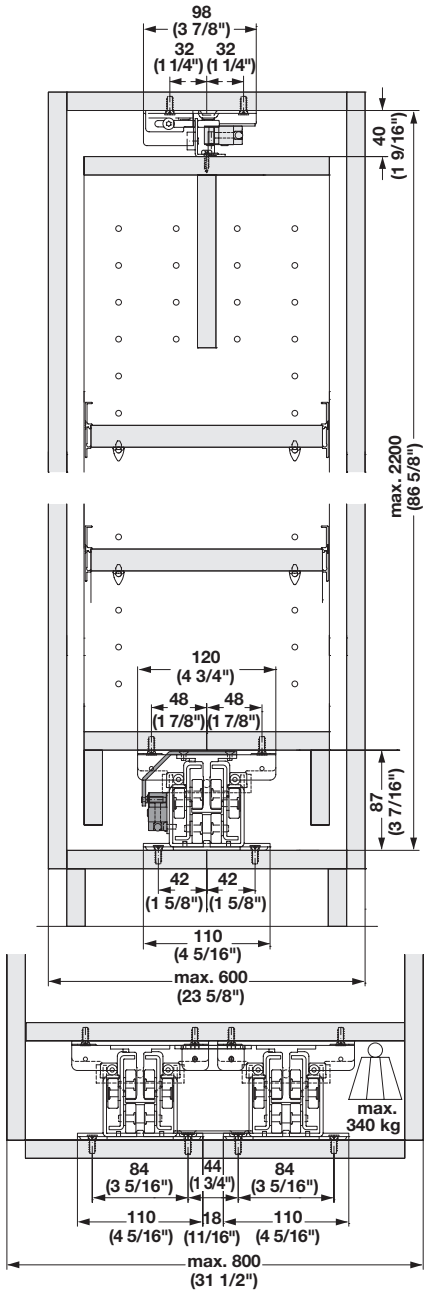

Dimensional data not binding. Dimensions in mm, inches are approximate. We reserve the right to alter specifications without notice.

HAWA

→ Easy Close Mechanism

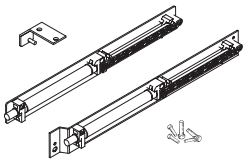

> Material: Steel/Plastic

	Item No.
	421.48.021

Note
Not for use on the shortest length.

→ Connection Set

> Weight capacity: 340 kg (748 lbs.)
> For connecting two pull-out cabinet guides
> For internal cabinet heights up to 2400 mm (94 1/2") and internal cabinet widths up to 800 mm (31 1/2")
> Installation height remains the same
> Material: Steel, galvanized

	Item No.
	421.48.001

Dimensional data not binding. Dimensions in mm, inches are approximate. We reserve the right to alter specifications without notice.

Full Extension

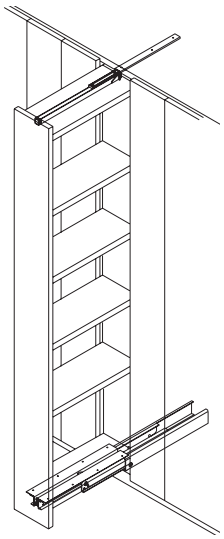

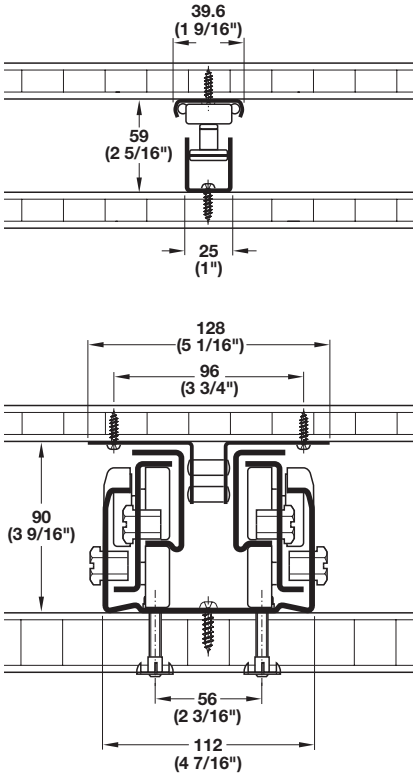

> Weight capacity including cabinet and useful load: 200 kg (440 lbs.)
> Good running characteristics and quietness due to integrated differential action
> All stops are made of plastic
> Patented profile shapes prevent rubbing noises
> Easy running due to high quality steel ball bearings
> Rear stop

Note
The running tracks of these guides should not be lubricated.

→ FR 777A Top/Bottom Mounted

> Height: max. 2500 mm (98")
> Width: max. 600 mm (24")
> For floor mounting
> Full extension progressive runner
> Ceiling guide for lateral stability
> U-profile is closed on one end to function as an end stop for the guide roller
> Material: Guides: Steel, epoxy-coated; Color: white
Rollers: Solid Delrin, Steel ball bearing (encased)

Installed length	Extension length	Item No.
400 (15 3/4")	384 (15 1/8")	421.50.820
450 (17 3/4")	434 (17 1/16")	421.50.821
500 (19 5/8")	484 (19 1/16")	421.50.822
550 (21 5/8")	534 (21 1/16")	421.50.823
600 (23 5/8")	584 (23")	421.50.824
650 (25 1/2")	634 (24 15/16")	421.50.825
700 (27 9/16")	684 (26 15/16")	421.50.826
750 (29 1/2")	734 (28 7/8")	421.50.827
800 (31 1/2")	784 (30 7/8")	421.50.828
850 (33 1/2")	834 (32 13/16")	421.50.829
900 (35 3/8")	884 (34 13/16")	421.50.830
950 (37 3/8")	934 (36 3/4")	421.50.831
1000 (39 3/8")	984 (38 3/4")	421.50.832
1100 (43 5/16")	1084 (42 11/16")	421.50.833

Supplied With
Bottom slide
Top slide
Instructions

→ Easy Close Mechanism, optional

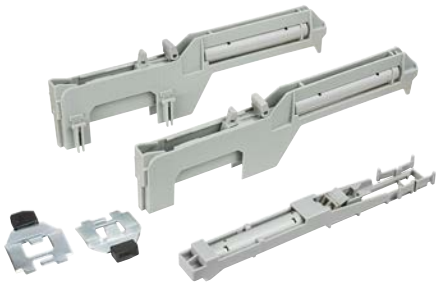

> Material: Plastic

Color	Item No.
gray	421.50.002

Dimensional data not binding. Dimensions in mm, inches are approximate. We reserve the right to alter specifications without notice.

9

HÄFELE

HINGES AND STAYS

Institutional Hinges

Aximat® Hnges 9.4-9.7
Salice Single Pivot 9.8
Sugatsune Heavy Duty 9.9
Five-Knuckle Hinges 9.10-9.11

Concealed Hinges

Salice

Information 9.12-9.16
100 Series Silentia+ 9.17
Thin Door 9.18
200 Series 9.19-9.22
Wide Angle 9.23
700 Series Silentia+ 9.24
Special Application 9.25-9.29
PUSH System 9.30-9.32
Lapis 110° 9.33
Thick Door / 40 mm 9.34-9.35
Air Hinge 9.36
Mounting Plates 9.37-9.42
Shock Absorbers/Accessories 9.43-9.45
Hinge Machine 9.46

Grass TIOMOS

Information 9.47-9.48
94° 9.49-9.50
110° 9.51
120° 9.52
160° 9.53
M8 and M10 9.54
PCC Pie-Cut 9.55
Blind Corner/45° Corner 9.56-9.57
Tipmatic Plus 9.58-9.59
Mounting Plates/Accessories 9.60-9.62
Pro 1 Machine 9.63

Assorted Hinges

Clip-On 110° 9.64-9.67
Pie-Cut Corner & Blind Corner 9.68
Mounting Plates 9.68-9.69
Futura 250 Hinge Machine 9.70
Slide-on Hinges and Mounting Plates 9.71-9.72
S-Series Stainless Steel Hinges 9.73
Salice Face Frame 9.74-9.76
Grass TEC Face Frame 9.77-9.78
Face Frame 9.79
Invisible Hinges 9.80
Zysa Hinges 9.81
Easy Mount/Pie-Cut Corner Hinge 9.82

Furniture Hinges

Decorative Butt 9.83-9.88
Piano Hinges 9.89
Butt Hinges 9.90
Simplex-wood Door Hinge/Pivot Hinges 9.91-9.92
Mitre Hinges/Folding Hinges 9.93-9.94

Flap Hinges

Grass Tiomos 90° 9.95-9.96
In-Side Flap Hinge 9.97-9.98
Concealed Flap Hinge 9.99
Plano Flap Hinge 9.100

Dimensional data not binding. Dimensions in mm, inches are approximate. We reserve the right to alter specifications without notice.

Lid and Flap Stays

Häfele Free Space 9.101-9.104
Häfele Free Flap H 1.5 9.105-9.111
Häfele Maxi 9.112-9.120
Häfele Free Flap 1.7/3.15 9.121-9.124
Häfele Free Up 9.125-9.128
Häfele Free Swing 9.129-9.130
Häfele Free Fold 9.131-9.136
Häfele Drilling Jigs for Lift-Up Fittings 9.137
Duo Lid/Flap Stay 9.138-9.141
Salice Wind 9.142-9.145
Lid Stays/Firmatop 9.146
Fall-ex® Lid Stay 9.147
E-Z Open 9.148
Häfele Automatic Opening 9.149
304 Stainless Steel 9.150
Lid Stays with Soft Close 9.151
Swingtop 11 9.152
Häfele Star Stop Flap Stay 9.153
Dorona-stop 9.154
Flap Stay with Catch 9.155
Fall-ex® Flap Stay 9.156
Short Arm Flap Stay 9.157
Miniwinch/Microwinch 9.158-9.162
Salice Pacta 9.163-9.164
Door Restraints 9.165
Häfele Maxi Chest Stay 9.166-9.167
Bench Seat Hinge/Drawer Pull Catches 9.168
Accuride 1155 Easy Down 9.169

Glass Door Hinges

Simplex 9.170
Badge Hinge and Lock System 9.171-9.172
Lightweight/Mid-Weight Doors 9.173-9.175
Salice 9.176
Häfele A-Series 9.177
Salice Series B 9.178
Aximat® 9.179-9.180
Inset Door Hinges 9.179
Aximat® 9.180

Aluminum Frame Doors

Premium 9.181-9.186
Classic 9.187-9.190

Door Stops

Soft Close Magnetic Catches 9.191
Grass Unisoft 9.192
Stops with Bumpers/Accessories 9.193-9.194
Door Bumpers 9.195-9.198

Dimensional data not binding. Dimensions in mm, inches are approximate. We reserve the right to alter specifications without notice.

Aximat® 300 Single Pivot Hinge Series

During overlay (side to side) adjustment, the knuckle moves with the door, so that there is no unsightly gap between the door's edge and knuckle.

Advantages

> Hinges have integrated door catch, no additional door catches required
> Uses fewer screws than a more traditional 5-knuckle hinge
> Easy 3D adjustability – no "brute force" bending (adjusting) required
> Door width: up to 600 mm (23 5/8") wide

Applications

> Schools, retail environments, healthcare & laboratory furniture, offices, lockers, garage storage cabinets, etc.

The Aximat® 300 from Häfele is the only 3D Clip-On hinge which meets the highest requirements of the Woodworkers Institute and ANSI/BHMA Grade 1 Standards.
The following is a review of the test and the required test values:

Durability – Hinge Operating Life Test

> Test door weight: 18 kg (40 lbs.)
> Cycle test; door is opened and closed 100,000 times
> After cycle test is complete, vertical sag of door can not exceed .76 mm (1/32")

Security – Hinge Load Test

> Using a new set of hinges, measure door position without weight applied
> Add 72 kg (160 lbs.) to door and operate through one cycle (opening/closing)
> Remove weight and measure any sag
> Vertical sag of door can not exceed .76 mm (1/32")
> Horizontal sag of door can not exceed .76 mm (1/32")

To put this test into perspective:
A heavy door weighing 18 kg (40 lbs.) can be opened and closed 13 times per day, 365 days per year, (withstand some occasional abuse) and operate trouble-free for over 20 years.

Test results from an independent testing laboratory are available upon request.

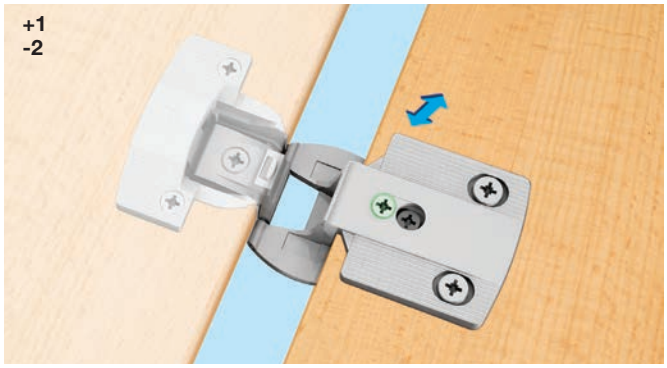

Door overlay (side to side) adjustment is on the base plate as opposed to the door component. This offers continuous adjustment in both directions +1/-2 mm.

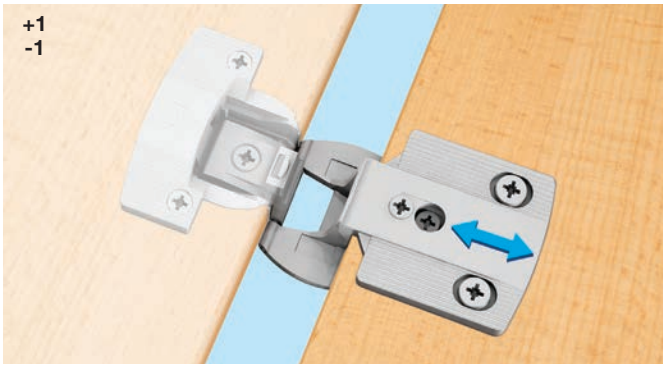

Depth adjustment is achieved with oblong holes ± 1 mm. This allows for application of door seals or to correct distortion of door.

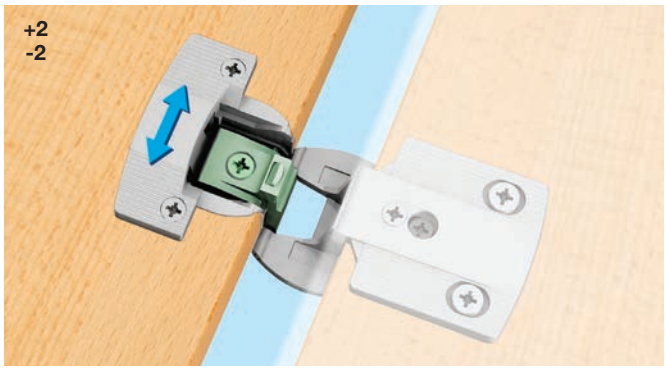

Height adjustment (up and down) is on the door component rather than base plate. This means only the door moves and not the knuckle. This is particularly important on rows of cabinets when knuckles are back to back as they will stay in alignment.

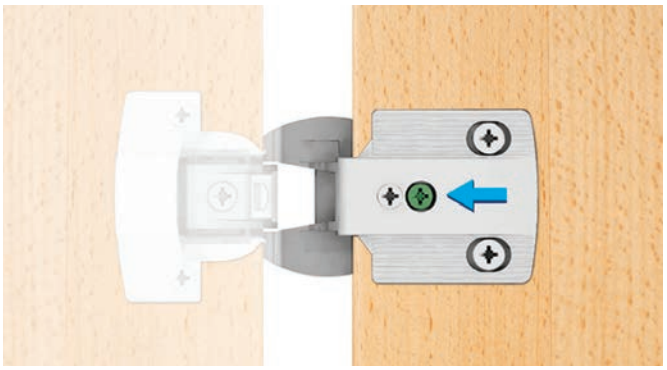

The important "Safety Screw" (required) does not effect the adjustments. It can be pre-installed in the shop so it's not overlooked at the job site, avoiding expensive call backs.

Dimensional data not binding. Dimensions in mm, inches are approximate. We reserve the right to alter specifications without notice.

Aximat® 300 Single Pivot Hinge

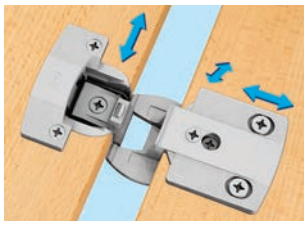

3D adjustment

- > Sleek sophisticated design, only 5 mm (3/16") of knuckle is visible
- > Hinge arm component available with pre-installed expanding dowels for 5 mm (3/16") holes, or for screw attachment
- > Hinge cup component available in screw mount or dowel mount
- > Arm and cup clip together, no tools required
- > For side panel thickness: 19 mm (3/4")
- > For door thickness: up to 21 mm (13/16")
- > Integrated catch keeps doors closed, no additional magnetic catches required
- > For single cabinets and storage walls
- > Available in twin mounted version, 2 doors can be mounted on a single hinge on a single side panel

Note #6 wood screws for hinge attachment are not included.

Drilling pattern for side panel

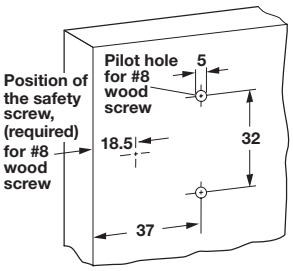

Drilling pattern for cup

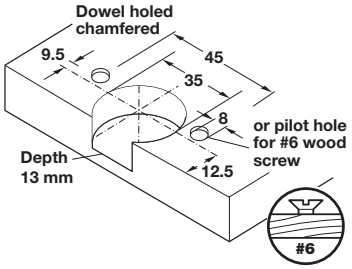

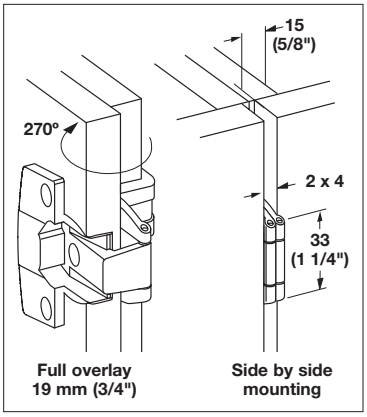

Door overlay 15 mm + knuckle 4 mm = 19 mm (3/4")

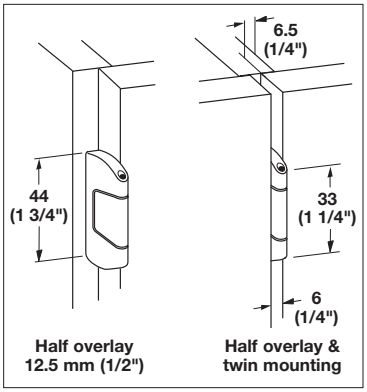

Door overlay 6.5 mm + knuckle 6 mm = 12.5 mm (1/2")

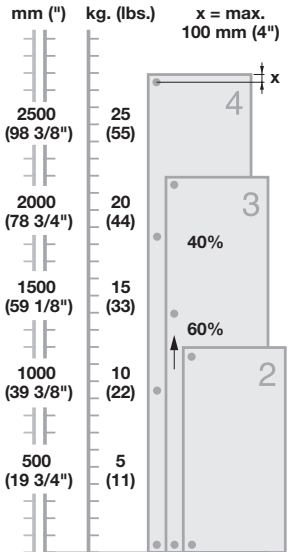

Recommended number of hinges

- > Door widths up to 600 mm (23 5/8")
- > Door width should not exceed height

→ Cup

- > Screw mounted
- > Material: Zinc

Finish	Item No.
matt nickel	344.06.800
black	344.06.850

→ Cup for 8 mm holes

- > Dowel mounted
- > Material: Zinc

Finish	Item No.
matt nickel	344.06.810
black	344.06.860

→ Arm

- > Full overlay
- > Without screws
- > Material: Zinc

Opening angle: 270°

Finish	Item No.
matt nickel	344.06.930
black	344.06.980

→ Arm

- > With pre-mounted expanding dowels for 5 mm (3/16") holes
- > Material: Zinc

Finish	Overlay	Opening angle	Item No.
matt nickel	full	270°	344.06.920
black	full	270°	344.06.320
matt nickel	half	240°	344.06.921
	twin	180°	344.06.902
	inset	180°	344.06.903

Note
Twin mounted version requires 2 cups.

Flat head wood screws page 12.13

Dimensional data not binding. Dimensions in mm, inches are approximate. We reserve the right to alter specifications without notice.

Aximat® 300 Thin Panel Hinge

> Specifically designed for thin panels such as Phenolic material
> Sleek sophisticated design, only 5 mm (3/16") of knuckle is visible
> During overlay (side to side) adjustment, the knuckle moves with the door preventing a gap between door's edge and knuckle
> Door overlay (side to side) adjustment is on the arm component offering continuous adjustment of +1 /-2 mm in both directions
> Depth adjustment: ± 1 mm with oblong holes
> Height adjustment: ± 2 mm on door component
> "Safety Screw" can be pre-installed at any time
> Integrated catch keeps doors closed
> Tested in accordance with ANSI/BHMA Grade 1 standards

Note
Stainless Steel hinge is ideal for MRI applications.

→ Thin Panel Hinge

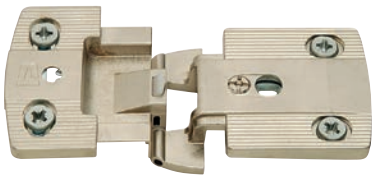

3D adjustment

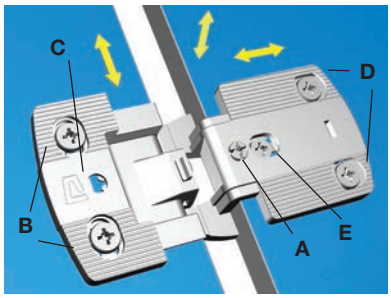

Opening angle: 270°

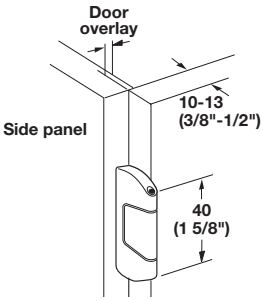

Drilling pattern for door

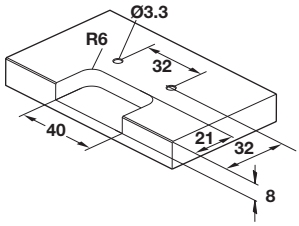

Drilling pattern for side panel

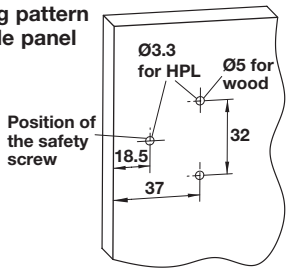

> Screw mounted
> Material: Zinc; Finish: matt nickel

Door overlay	Item No.
3.5 (5/32") + knuckle 6 (1/4") = 9.5 (3/8")	344.75.760
7 (9/32") + knuckle 6 (1/4") = 13 (1/2")	344.75.770
13 (1/8") + knuckle 6 (1/4") = 19 (3/4")	344.75.790

> Material: 316 Stainless Steel

Door overlay	Item No.
7 (9/32") + knuckle 6 (1/4") = 13 (1/2")	344.75.730

Door Overlay Adjustment: Turn screw **A** to adjust the overlay in both directions. **Height Adjustment:** Loosen screws **B**. Activate the height adjustment by pushing with screwdriver into window **C** moving tab away, adjust ±2 mm by turning screwdriver. Re-tighten screws. **Depth Adjustment:** Loosen special screws **D** and **E**, adjust manually in the prolonged hole. Security screw **E** (required) can be installed at any time, 3D adjustment is still available.

Supplied With Special non-corroding screws

Note Screw holes should be slightly tapered in Phenolic material to assure a tight fit.

→ Stainless Steel Thin Panel Hinge

Opening angle: 240°

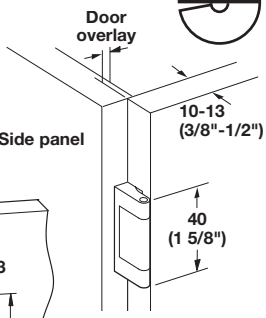

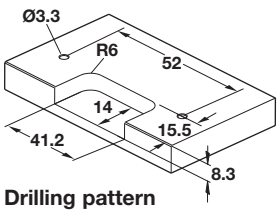

Drilling pattern for side panel

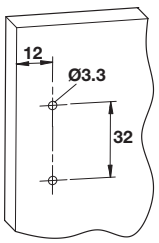

Drilling pattern for door

> Meets 720 hour salt spray test
> Door overlay (side to side) adjustment: -1 mm with oblong holes
> Height adjustment: ± 2 mm with oblong holes
> With catch

> Screw mounted
> Door overlay: 3.5 (9/32") + knuckle 6 (1/4") = 9.5 (3/8")
> Material: 316 Stainless Steel

	Item No.
	344.75.051

Supplied With
4 Stainless steel mounting screws

Dimensional data not binding. Dimensions in mm, inches are approximate. We reserve the right to alter specifications without notice.

Aximat®

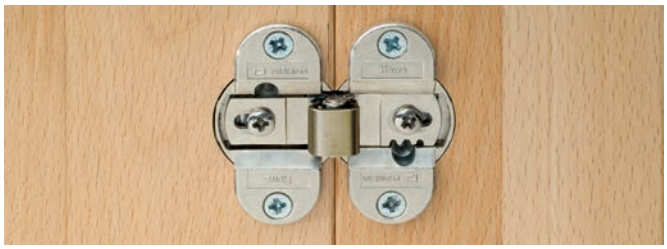

> For free-swinging or guided folding doors
> Door thickness: min. 13 mm (1/2")
> Door width: up to 600 mm (23 5/8")
> Same drilling pattern for both leaves
> Gap range is adjustable from 0–10 mm (3/8")
> Factory supplied with pre-set 3 mm (1/8") gap
> Adjustable pivot point
> Constant spring tension is maintained during all adjustments

→ Folding Door Hinge

Symmetrical and/or asymmetrical adjustment of the door leaves

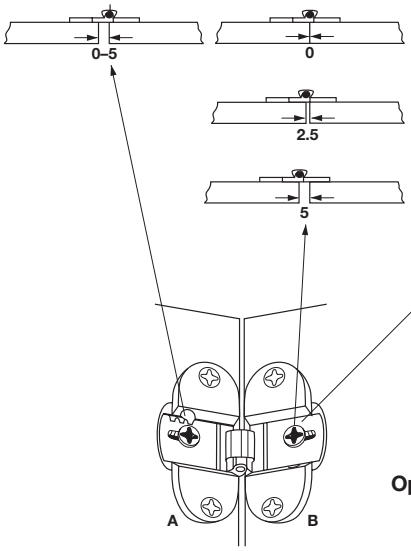

Height adjustment

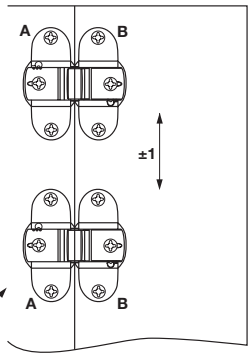

> Material: Zinc

Finish	Item No.
nickel	343.91.600

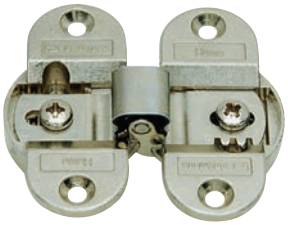

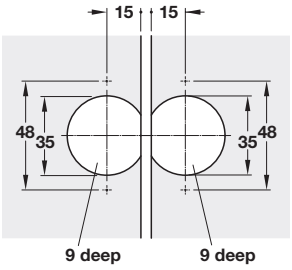

To hold the door leaves flat, install a support.

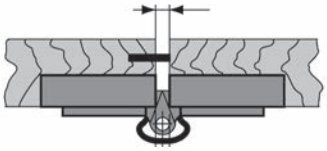

Flat Head #8

Opening angle: 180°

Aximat 300 Accessories

→ Opening Angle Restraint

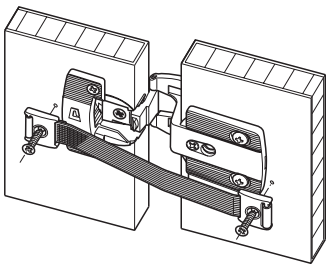

> Opening angle: <120°
> For screw mounting, hinge type independent
> Individual opening angle by shortening the strip
> Material: Strip: Plastic Fabric; Parts: Zinc Alloy

Finish	Item No.
black/nickel-plated	344.00.991

Flat head screws pages 12.7-12.8, 12.10, 12.13

Dimensional data not binding. Dimensions in mm, inches are approximate. We reserve the right to alter specifications without notice.

Salice

Opening angle: 270°

> With height 2 mounting plate
> Side adjustment: -3 mm – +3 mm (-1/8" – +1/8")
> Height adjustment: + 2 mm (1/16")
> Depth adjustment: +2.8 mm (1/8") with a height 2 mounting plate
> Door thickness: max. 20 mm (13/16")
> Hinges have built-in catch to stay closed
> Magnetic catches are not required
> Tested in accordance with ANSI/BHMA Grade 1 standards

→ Single Pivot Hinge

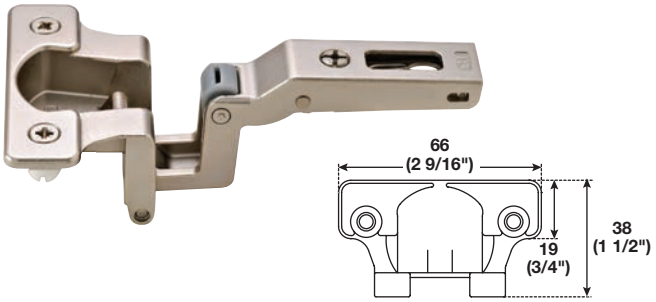

> Material: Steel; Finish: nickel-plated

Mounting	Model	Item No.
Screw	CMP3A99	329.58.600
Dowel	CMR3A99	329.58.610

Full overlay
with recessed knuckle application

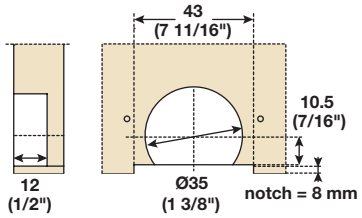

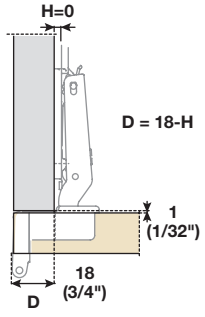

Partial overlay
with external knuckle application

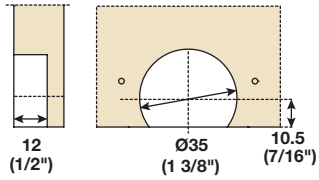

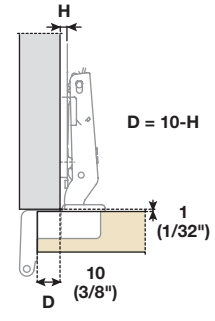

Application
with inset door

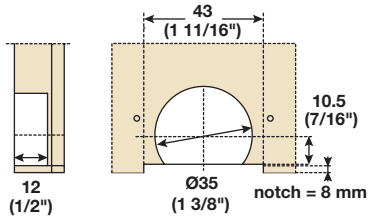

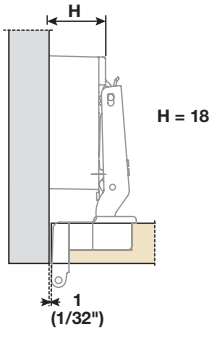

Formula to determine baseplate:
D = overlay
H = baseplate

Mounting plates page 9.41

Dimensional data not binding. Dimensions in mm, inches are approximate. We reserve the right to alter specifications without notice.

Concealed Heavy Duty Hinge Sugatsune J95

> For thick heavy doors
> Clip-on for easy installation
> Door thickness: 18–34 mm (11/16"–1 3/8")
> Tab: 3–8 mm (1/8"–5/16")
> Overlay: 19–25 mm (3/4"–1")
> Door width: max. 800 mm (31 1/2") with 2 hinges
max. 900 mm (35 7/16") with 3 hinges
> 3-way adjustment: Side: +0/-4 mm
Depth: +1.5/-2.5 mm
Vertical: +/-3 mm (on plate)
> Weight capacity: 25 kg (55 lbs.) with 2 hinges
40 kg (88 lbs.) with 3 hinges

Note
If door is over 30 mm (1 3/16") thick, the door must be chamfered.
Requires 6 #10 screws per hinge and plate (015.80.105).

→ Full Overlay Hinge

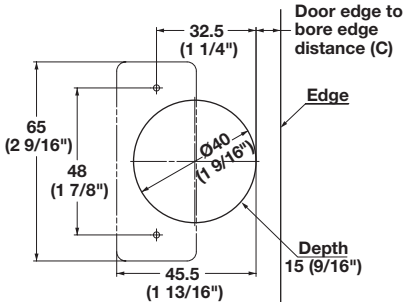

> Material: Steel; Finish: nickel-plated

Overlay	Item No.
Full	327.21.500
Half	327.21.521

Door to Edge (C)	3	4	5	6	7	8
Full Overlay (E)	20	21	22	23	24	25
Half Overlay	11	12	13	14	15	16

→ Mounting Plate

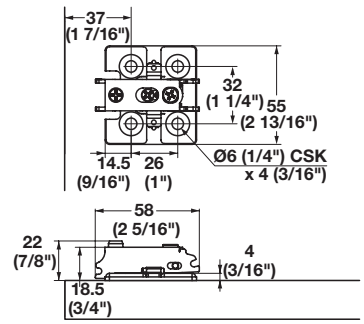

> Adjustment: +/-3 mm (1/8")
> Clip-on
> Material: Steel

Finish	Item No.
nickel-plated	327.32.500

→ Door Bumper, optional

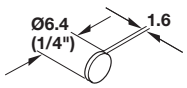

> Material: 100% Polyurethane, transparent

	Item No.
	356.25.445

Supplied With
1,734 pcs.

Dimensional data not binding. Dimensions in mm, inches are approximate. We reserve the right to alter specifications without notice.

Advantage 5 K Hinge

Offset hole pattern allows for larger mounting screws

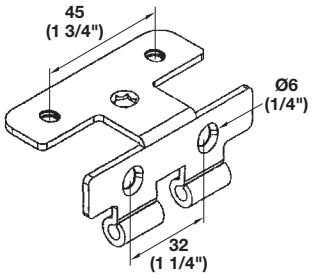

Opening angle: 270°

- > ANSI/BHMA A-156.9-2001 Grade 1 approved
- > Universal usage on 19 and 21 mm (3/4" and 13/16") materials
- > 14 gauge steel
- > Hinge knuckles broached for precision pin alignment and smooth operation
- > Hinge leaves punched after forming for precision alignment
- > "Easy Hang" feature: one person operation for large doors
- > Pre-mounted 5 mm (3/16") euro screws on door side
- > Universal drill pattern consistent with Aximat® and concealed hinges
- > Standard drilling equipment can be used
- > Standard 37 mm (1 1/2") set back and 32 mm (1 1/4") system drilling

→ Five-Knuckle Hinge

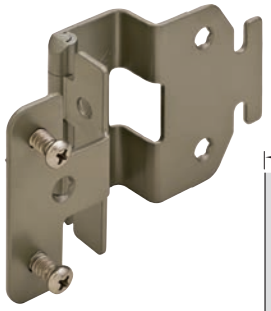

Press-fit drilling diagram

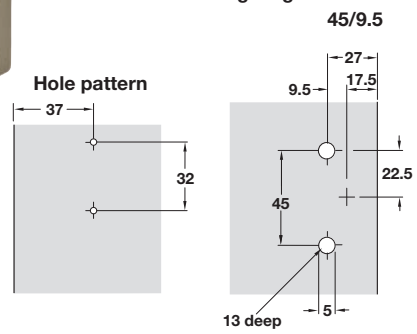

- > Material: Steel, powder-coated or plated

Finish	Item No.
matt black powder-coated	354.65.300
dull chrome powder-coated	354.65.200
brushed nickel plated	354.65.410
gloss white powder-coated	354.65.745

→ Stainless Steel Five-Knuckle Hinge

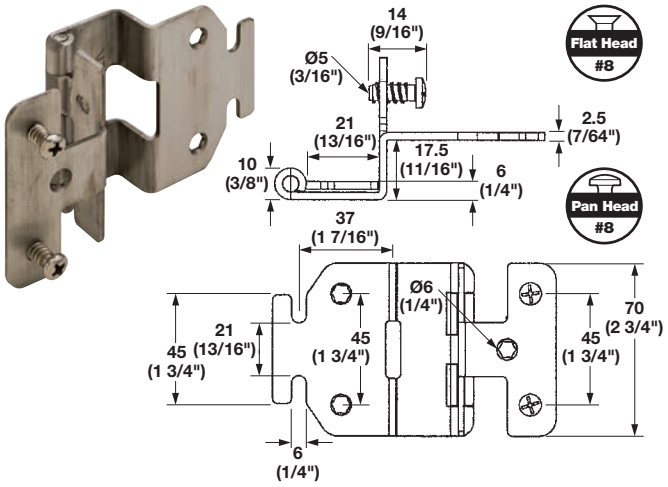

- > Material: 304 Stainless Steel

	Item No.
	354.65.000

Supplied With
Screws

→ Special Varianta Screw

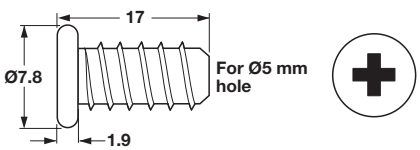

- > Material: Steel

Finish	Item No.
nickel-plated	013.27.702

Supplied With
5000 pcs.

Flat head screws	page 12.7-12.8, 12.10, 12.13
Pan head screws	pages 12.9-12.10

Dimensional data not binding. Dimensions in mm, inches are approximate. We reserve the right to alter specifications without notice.

Five-Knuckle Hinge

Opening angle: 270°

> Industry standard 70 mm (2 3/4") five-knuckle hinge
> Hospital tips and corners for safety
> Non-removable knurled pin
> Tumbled to remove sharp edges
> Tested in accordance with ANSI/BHMA
> Free-swing hinges require a catch for proper closing, see recommendation below

→ Grade 1 Hinge

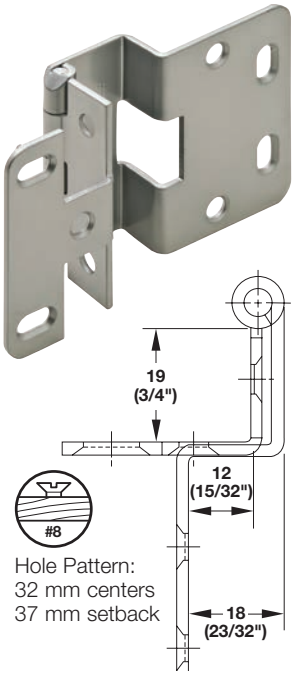

19 mm (3/4") door thickness

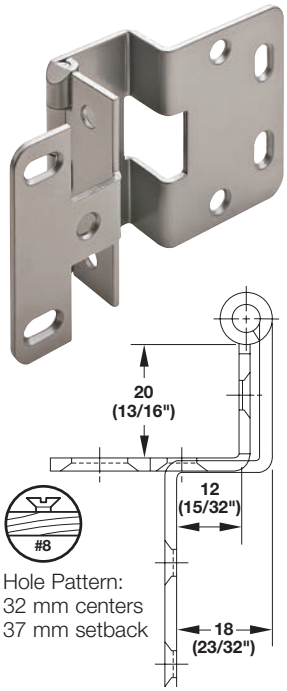

20 mm (13/64") door thickness

> Door thickness: 19 mm (3/4")
> Material: .090" Steel

Finish	Import	Domestic
chrome powder-coated	354.65.220	354.65.435
black powder-coated	354.65.320	-
chrome-plated dull 26D	354.65.420	354.65.430

> Door thickness: 20 mm (13/16")
> Material: Steel

Finish	Import	Domestic
chrome powder-coated	354.65.221	-
black powder-coated	354.65.321	-
chrome-plated dull 26D	354.65.421	354.65.440
stainless steel	354.65.021	354.66.000

Note
Screws not included. Hinges require #8 wood screws or 5 mm with 7.8 mm head euro screws. For use with point to point drilling equipment or if color match is critical, we recommend using the domestically manufactured hinges.

Flat head wood screws	page 12.13
Pan head screws	pages 12.9-12.10

→ Elbow Catch

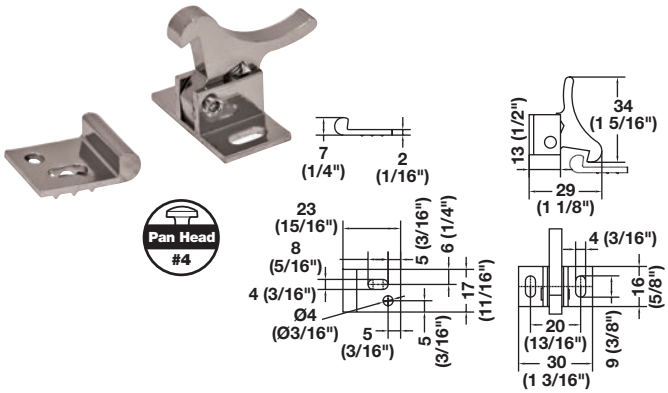

> With oblong holes
> Material: Brass

Finish	Item No.
chrome-plated	245.74.201

→ Magnetic Catch

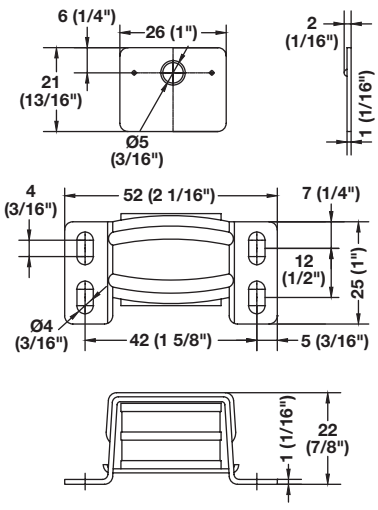

> Screw mounted
> Holding power: 6 kg (13.2 lbs.)
> Material: Catch: Aluminum; Strike: Steel

	Item No.
	246.92.005

Supplied With
Mounting screws

Dimensional data not binding. Dimensions in mm, inches are approximate. We reserve the right to alter specifications without notice.

Salice Guide

> Self-close, Silentia+ soft close and free-swinging hinges available
> Screw mount, Dowel, Rapido and Logica mounting options
> Use with any Salice mounting plates

	Opening angle	Door thickness	Tab	Page
Concealed with 35 mm Cup	105°	15–20 mm (9/16"–13/16")	3–6 mm (1/8"–1/4")	9.17
	105°	10–20 mm (3/8"–13/16")	3–6 mm (1/8"–1/4")	9.18
	94°	16–35 mm (5/8"–1 3/8")	3–9 mm (1/8"–11/32")	9.19
	110°	16–26 mm (5/8"–1")	3–6 mm (1/8"–1/4")	9.20–9.21
	120°	16–26 mm (5/8"–1")	3–6 mm (1/8"–1/4")	9.22
	110°	18–35 mm (11/16"–1 3/8")	3–9 mm (1/8"–11/32")	9.24
Wide Angle	155°	28 mm (1 1/8")	3–8 mm (1/8"–5/16")	9.23
	165°	28 mm (1 1/8")	3–8 mm (1/8"–5/16")	9.23
Special Application	110°	varies	3–18 mm (0/0"–11/16")	9.25
	70°	16–22 mm (5/8"–1")	3–9 mm (1/8"–11/32")	9.25
	94° 110°	16–26 mm (5/8"–1")	3–9 mm (1/8"–11/32") 3–6 mm (1/8"–1/4") Silentia+	9.26
	94° 110°	16–35 mm (5/8"–1 3/8")	3–9 mm (1/8"–11/32") 3–6 mm (1/8"–1/4") Silentia+	9.27
	120°	16–26 mm (5/8"–1")	3–6 mm (1/8"–1/4")	9.27
Push	110°	16–26 mm (5/8"–1")	3–6 mm (1/8"–1/4")	9.30
	155° 165°	16–28 mm (5/8"–1 1/8")	3–8 mm (1/8"–5/16")	9.30
Thick Door (40 mm cup)	94°	19–38 mm (3/4"–1 1/2")	3–15 mm (1/8"–9/16")	9.35
Air	105°	Min. 18 mm (3/4")	-	9.37

Dimensional data not binding. Dimensions in mm, inches are approximate. We reserve the right to alter specifications without notice.

Salice Guide

> Use with any Salice hinge

	Mounting method	Height															Page
		0	1	2	3	4	6	9	11	12	13.5	18	21	24	27	30	
Clip 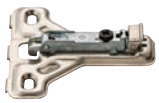	wood screw		●			●			●	●	●						9.37
	wood screw	●		●	●		●	●		●		●	●	●	●	●	9.38
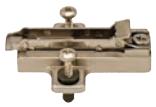	pre-mounted euro screw or expandable dowel	●		●	●		●	●		●		●	●		●	●	9.38
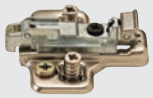	wood screw pre-mounted euro screw	●			●		●										9.39 –9.40
In Line	wood screw	●			●		●	●									9.41
	euro screws			●	●												9.41

	Mounting method																Page
		0	1	2	3	4	6	9	11	12	13.5	18	21	24	27	30	
Special Application	wood screw pre-installed euro screw	●			●			●									9.42
	wood screw																9.42
	wood screw																9.42
Shock absorbers																	9.43 –9.44
Accessories																	9.45

Dimensional data not binding. Dimensions in mm, inches are approximate. We reserve the right to alter specifications without notice.

Salice

→ Opening Angle – What are your options?

94°

> Often used on an end panel against a wall or another cabinet to restrict the opening
> For increased reduction of opening angle
> Many pocket door systems use this hinge
> Commonly used for thick door applications with narrow stiles
> Use where appliances or where cabinet depths limit opening angle
> Angle reduction clips reduce angle further to 86°

94° Thick Door

> For thick doors with narrow stiles
> Less concern of drilling through coping detail
> Possible tab distance 3–9 mm (1/4"–11/32") on square edged door; larger tabs on door with front edge detail
> Doors up to 35 mm (1 1/4") thick
> Overlays up to 24 mm (15/16")

105°

> Shallow 8 mm (5/16") deep cup
> Used for unusually thin door applications 10 mm (3/8")
> Non-dowelled
> Gap between door: .2 mm on a 10 mm (3/8") door
2.3 mm on a 19 mm (3/4") door

110°

> The standard opening angle for a concealed hinge and is the most commonly used

120°

> Often used in kitchen applications, it allows for greater access into the cabinet
> Commercial specs

155°

> Zero protrusion on full overlay (0, 2 mm mounting plates)
> Commonly used with pull-out/roll-out shelves
> Available in thin and thick door applications
> Available in Silentia+

165°

> Allows for the most access into the cabinet
> These are also referred to as Wide Angle Hinges
> Zero protrusion on full overlay with max. 2 mm mounting plates

Cover open

Place the hinge in the pre-bored holes.

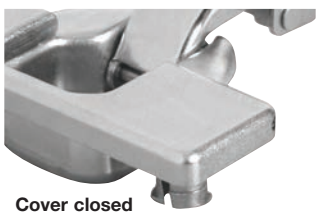

Cover closed

Close the cover with finger pressure until it snaps locking it closed.

→ Closing Method – What are your options?

Self-Closing

> The standard hinge for the industry, the spring in the hinge arm holds the door shut

Free-Swinging

> Does not have an internal spring
> Typically used with touch latches – partial opening

Silentia+

> This type of hinge will keep the door from slamming and provide a nice soft closing action
> It is important to note that this type of hinge requires a deeper than normal hole in the door, precise drilling depth for optimal performance

PUSH

> This type of hinge combined with the proper latch, will allow the door to open automatically when it is pressed
> The spring is reversed to push the door completely open, rather than hold it shut
> It must always be used in combination with a PUSH latch
> Touch latch

→ Mounting Method - What are your options?

Screw

> Drill a 35 mm (1 3/8") hole in the door and attach hinge with (2) #6 wood screws

Dowel

> Drill a 35 mm (1 3/8") hole and and (2) 8 mm (5/16") holes, this is the most common application in the industry
> The hinge would then be pressed into the door using a hinge machine or rubber mallet
> The dowels are not removable once they are inserted
> The hinge can only be removed by backing the screws out of the dowels

Rapido

> Drill a 35 mm (1 3/8") hole and and (2) 8 mm (5/16") holes
> The hinge is attached by turning 2 locking dowels 1/2 turn (180º) with hand screwdriver
> Requires a Pozi Drive #2 screwdriver

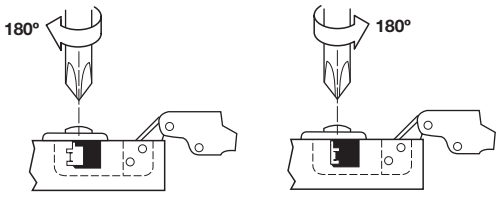

Installation **Removal**

Logica

> This is a completely tool-less method of attachment
> Drill a standard 35 mm (1 3/8") hole and (2) 8 mm (5/16") holes
> The hinge is attached by special expansion dowels in the 8 mm (5/16") holes that spread apart when the cover cap is snapped down
> Thinnest lid profile in the market

Dimensional data not binding. Dimensions in mm, inches are approximate. We reserve the right to alter specifications without notice.

Salice

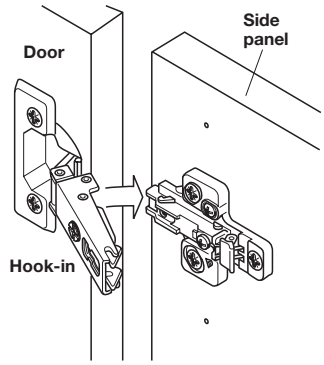

Step 1
Unique compensated adjustment. No gap increase between door and panel.

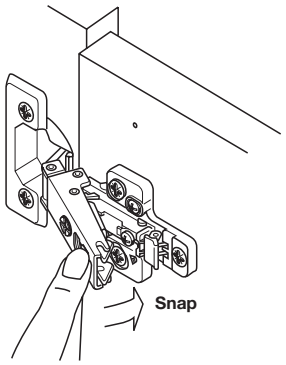

Step 2
Rotate cam adjustment screw on baseplate.

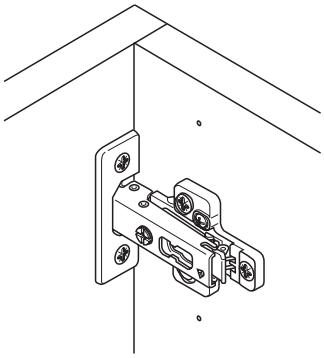

Adjustments

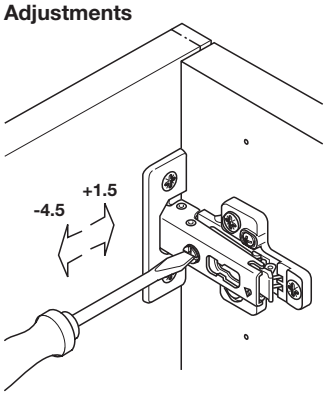

Parallel Side Adjustment
by screw adjustment (6 mm (1/4") of adjustment).

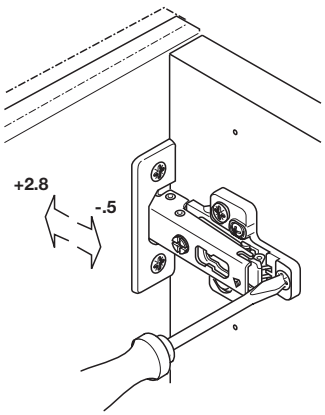

In-and-Out
by loosening the hinge-arm mounting screw or via cam adjustment (3.3 mm (1/8") of adjustment).

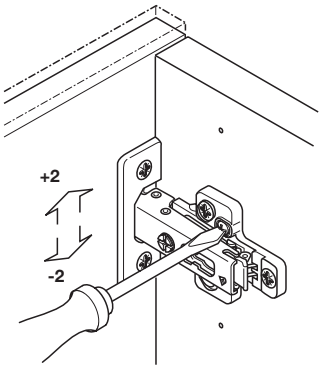

Vertical
via slots in the mounting plate or cam adjustment (4 mm (5/32") of adjustment).

Lifetime Warranty

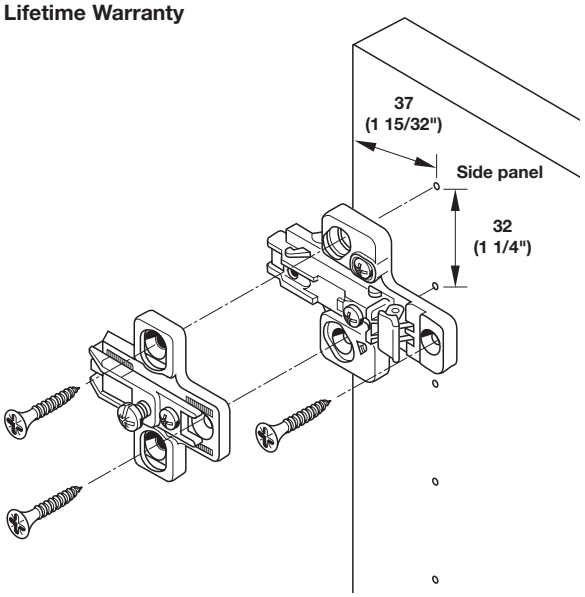

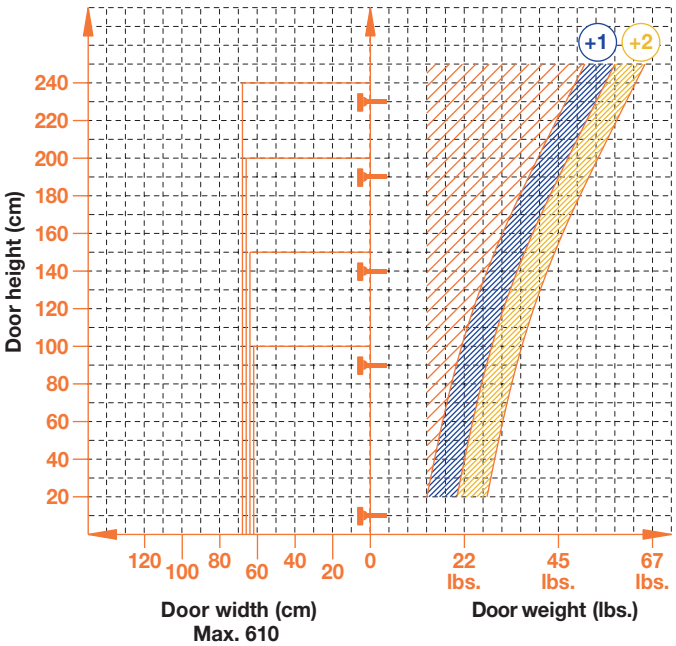

Dimensional data not binding. Dimensions in mm, inches are approximate. We reserve the right to alter specifications without notice.

Salice

→ How to determine and calculate overlay

The overlay is the correlation of a cabinet door to the cabinet side panel or the face frame. The amount of overlay determines the type of hinge that should be used. Different suppliers all can use the same formula, however be cautious, as their constants might be different.

There are 3 factors that are used to calculate the overlay:
The cup drilling distance or tab. (K)
The height or the mounting plate. (H)
The hinge constant, which is a value set by the supplier.

Overlay = (constant + tab) – mounting plate height

Full Overlay

This means that the door significantly overlaps the cabinet opening on all four sides. A full overlay on a frameless cabinet typically ranges from 16–19 mm (5/8"–3/4"). A full overlay hinge is used along with a 0, 2, or 3 mm mounting plate.

Partial, Half, and 1/2" Overlay

Any of these partial overlays means that the door overlaps the cabinet less than the full overlay. Partial on a frameless cabinet would be between 6–16 mm (1/4"–5/8").

Inset

Inset doors fit completely into the face frame. They use a special hinge known as an inset hinge, or an overlay hinge can be used with a high mounting plate.

> Determine cabinet type:
– Frameless or Face Frame
> Select the overlay type:
– Full, partial, inset
> Select the opening angle or specialized style of the hinge
– 95, 105, 110, 120, 165, blind corner, angled
> Select the type of insertion into the door for the hinge cup and the type of fixing of the mounting plate to the inside wall or face frame of the cabinet
– Screw mount, press-fit/with dowels, Rapido (turned dowel), Logica (press-fit with locking clip)
> Determine the quantity of hinges required for the door size and weight

Overlay = (constant + tab) - bp height

Overlay = D	constant +	tab - K	bp height H
17.5	15	5.5	3
12.5	10	5.5	3
10	6	5	1
-2.5	-2	5.5	6
Alternate inset w/half hinge			
-1.5	6	4.5	12

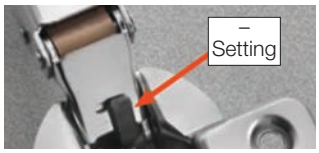

Soft close engages at 10 degrees from the face of the cabinet.

Soft close engages at 30 degrees from the face of the cabinet.

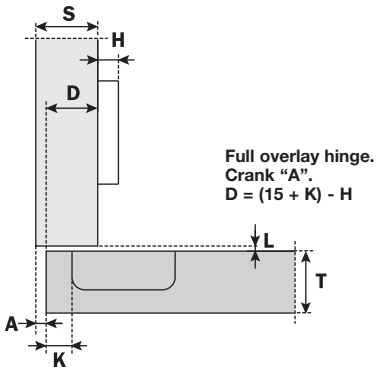

**Full overlay hinge.
Crank "A".
D = (15 + K) - H**

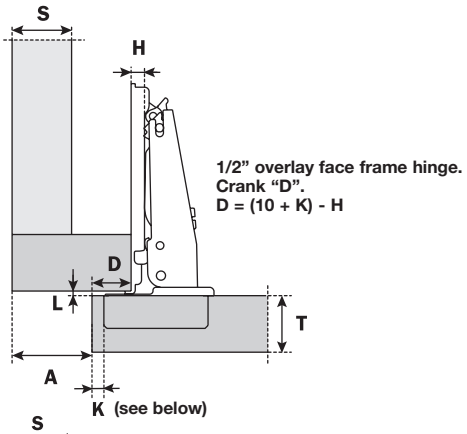

**1/2" overlay face frame hinge.
Crank "D".
D = (10 + K) - H**

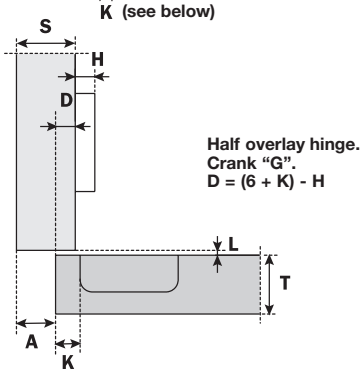

**Half overlay hinge.
Crank "G".
D = (6 + K) - H**

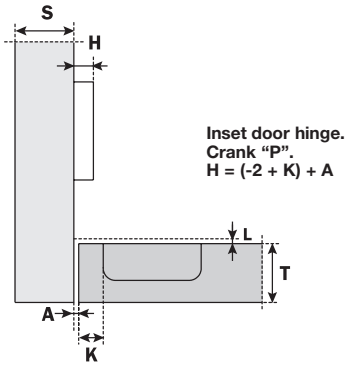

**Inset door hinge.
Crank "P".
H = (-2 + K) + A**

Overlay = (constant + drilling distance) - plate height. For special applications, do not hesitate to contact our customer service department.

Dimensional data not binding. Dimensions in mm, inches are approximate. We reserve the right to alter specifications without notice.

Salice

→ 100 Series Silentia+

soft&silent

Opening angle: 105°

- > Best choice for small or light doors
- > Impervious to temperature extremes
- > Door thickness: 15–20 mm (9/16"–13/16")
- > Tab: 3–6 mm (1/8"–1/4")
- > Exceeds ANSI/BHMA standards. A156.9 2010
- > Material: Steel

Screw mount

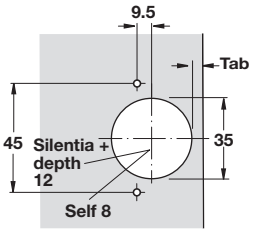

Dowel, Rapido, Logica

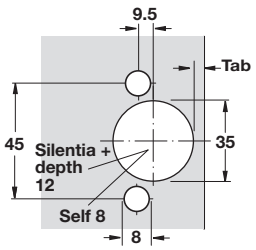

Finish	Mounting	Overlay	Hinge	Model	Item No.
nickel-plated	screw	full		C1P6AE9	329.28.440
nickel-plated	screw	1/2"		C1P6DE9	329.28.441
nickel-plated	screw	half		C1P6GE9	329.28.442
nickel-plated	screw	inset		C1P6PE9	329.28.443
nickel-plated	dowel	full		C1R6AE9	329.28.470
nickel-plated	dowel	1/2"		C1R6DE9	329.28.471
nickel-plated	dowel	half		C1R6GE9	329.28.472
nickel-plated	dowel	inset		C1R6PE9	329.28.473
nickel-plated	rapido	full		C176AE9	329.28.380
nickel-plated	rapido	1/2"		C176DE9	329.28.351
nickel-plated	rapido	half		C176GE9	329.28.383
nickel-plated	rapido	inset		C176PE9	329.28.384
nickel-plated	logica	full		C1J6AE9	329.28.490
nickel-plated	logica	1/2"		C1J6DE9	329.28.491
nickel-plated	logica	half		C1J6GE9	329.28.492
nickel-plated	logica	inset		C1J6PE9	329.28.493
titanium	dowel	full		C1R6AE6	329.50.414
titanium	dowel	1/2"		C1R6DE6	329.50.451
titanium	dowel	half		C1R6GE6	329.50.416
titanium	dowel	inset		C1R6PE6	329.50.417

Mounting plates	pages 9.37-9.42
Flat head screws	pages 12.7-12.8, 12.10, 12.13

Dimensional data not binding. Dimensions in mm, inches are approximate. We reserve the right to alter specifications without notice.

Salice

→ Thin Door Hinges

Opening angle: 105°

> Self-close
> For doors with deep profiles
> Shallow cup depth: 8 mm (5/16")
> Door thickness: 10–20 mm (3/8"–13/16")
> Tab: 3–6 mm (1/8"–1/4")
> Material: Steel; Finish: nickel-plated

Screw mount

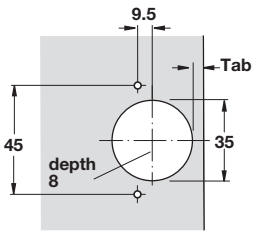

Dowel, Rapido, Logica

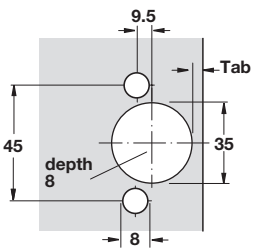

Mounting	Overlay	Hinge	Model	Item No.
Screw	full		C1P6A99	329.28.500
Screw	half		C1P6G99	329.28.502
Dowel	full		C1R6A99	329.28.510

Mounting plates	pages 9.37-9.42
Flat head screws	pages 12.7-12.8, 12.10, 12.13

Dimensional data not binding. Dimensions in mm, inches are approximate. We reserve the right to alter specifications without notice.

Salice

→ 200 Series

Half overlay self-close shown

soft&silent

> Door thickness: 16–35 mm (5/8"–1 3/8")
> Tab: 3–9 mm (1/8"–11/32")
> Material: Steel; Finish: nickel-plated

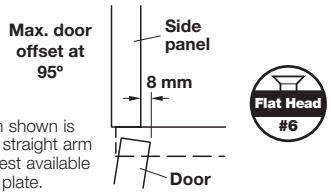

Protrusion shown is based on straight arm and smallest available mounting plate.

Flat Head #6

Opening angle: 94°

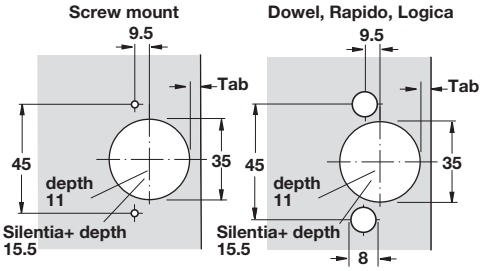

Closing method	Mounting	Overlay	Hinge arm	Model	Item No.
Self-close	screw	full		C2PBA99	329.31.500
Self-close	screw	half		C2PBG99	329.31.502
Self-close	screw	inset		C2PBP99	329.31.503
Self-close	dowel	full		C2RBA99	329.31.510
Self-close	dowel	half		C2RBG99	329.31.512
Self-close	dowel	inset		C2RBP99	329.31.513
Free-swinging	screw	full		C2PAA99	329.31.000
Free-swinging	screw	half		C2PAG99	329.31.002
Free-swinging	screw	inset		C2PAP99	329.31.003
Free-swinging	dowel	full		C2RAA99	329.31.010
Free-swinging	dowel	half		C2RAG99	329.31.012
Free-swinging	dowel	inset		C2RAP99	329.31.013
Self-close	Rapido	full		C27BA99	329.31.520
Self-close	Rapido	half		C27BG99	329.31.522
Self-close	Rapido	inset		C27BP99	329.31.523
Self-close	Logica	full		C2JBA99	329.31.530
Self-close	Logica	half		C2JBG99	329.31.532
Self-close	Logica	inset		C2JBP99	329.31.533
Silentia+	dowel	full		C2RBAE9	329.31.260
Silentia+	dowel	half		C2RBGE9	329.31.262
Silentia+	dowel	inset		C2RBPE9	329.31.263
Silentia+	Logica	full		C2JBAE9	329.31.280
Silentia+	Logica	half		C2JBGE9	329.31.282
Silentia+	Logica	inset		C2JBPE9	329.31.283

Mounting plates	pages 9.37-9.42
Flat head screws	pages 12.7-12.8, 12.10, 12.13

Dimensional data not binding. Dimensions in mm, inches are approximate. We reserve the right to alter specifications without notice.

Salice

→ 200 Series

Opening angle: 110°

> Door thickness: 16–26 mm (5/8"–1")
> Tab: 3–6 mm (1/8"–1/4")
> Material: Steel

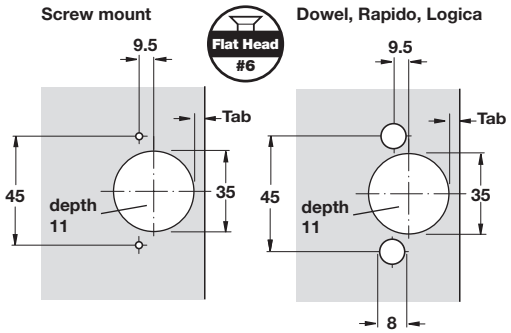

> Finish: nickel-plated

Closing method	Mounting	Overlay	Hinge arm	Model	Item No.
Self-close	screw	full		C2P6A99	329.17.507
Self-close	screw	1/2"		C2P6D99	329.17.510
Self-close	screw	half		C2P6G99	329.17.516
Self-close	screw	inset		C2P6P99	329.17.520
Self-close	dowel	full		C2R6A99	329.17.552
Self-close	dowel	1/2"		C2R6D99	329.17.562
Self-close	dowel	half		C2R6G99	329.17.561
Self-close	dowel	inset		C2R6P99	329.17.570
Free-swinging	screw	full		C2P4A99	329.16.500
Free-swinging	screw	half		C2P4G99	329.16.519
Free-swinging	screw	inset		C2P4P99	329.16.520
Free-swinging	dowel	full		C2R4A99	329.16.555
Free-swinging	dowel	half		C2R4G99	329.16.564
Free-swinging	dowel	inset		C2R4P99	329.16.570

> Finish: titanium

Closing method	Mounting	Overlay	Hinge arm	Model	Item No.
Self-close	dowel	full		C2R6A66	329.17.559
Self-close	dowel	inset		C2R6P66	329.17.579
Self-close	screw	full		C2P6A66	329.17.508
Self-close	screw	half		C2P6G66	329.17.517
Self-close	screw	inset		C2P6P66	329.17.521

Mounting plates	pages 9.37-9.42
Flat head screws	pages 12.7-12.8, 12.10, 12.13

Dimensional data not binding. Dimensions in mm, inches are approximate. We reserve the right to alter specifications without notice.

Salice

→ 200 Series

Opening angle: 110°

> Door thickness: 16–26 mm (5/8"–1")
> Tab: 3–6 mm (1/8"–1/4")
> Material: Steel; Finish: nickel-plated

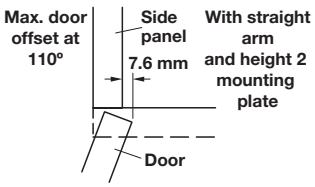

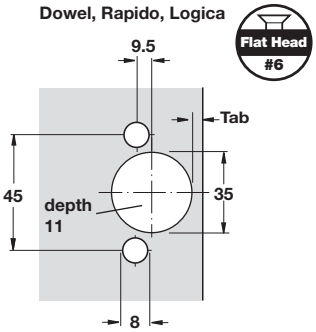

Closing method	Mounting	Overlay	Hinge arm	Model	Item No.
Self-close	Rapido	full		C276A99	329.17.580
Self-close	Rapido	1/2"		C276D99	329.17.583
Self-close	Rapido	half		C276G99	329.17.581
Self-close	Rapido	inset		C276P99	329.17.582
Free-swinging	Rapido	full		C274A99	329.16.580
Free-swinging	Rapido	half		C274G99	329.16.581
Free-swinging	Rapido	inset		C274P99	329.16.582
Self-close	Logica	full		C2J6A99	329.17.350
Self-close	Logica	1/2"		C2J6D99	329.17.351
Self-close	Logica	half		C2J6G99	329.17.352
Self-close	Logica	inset		C2J6P99	329.17.353

Space needed to open the door:

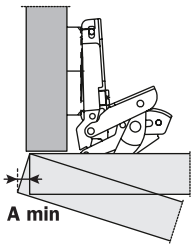

	T=	16	17	18	19	20	21	22	23	24	25	26
K=3	**A=**	0.5	0.7	0.91	1.2	1.51	1.8	2.43	3.7	5.16	6.5	7.8
K=4	**A=**	0.5	0.7	0.91	1.2	1.51	1.8	2.12	2.7	4.15	5.5	6.8
K=5	**A=**	0.5	0.7	0.91	1.2	1.51	1.8	2.12	2.6	3.14	4.1	5.4
K=6	**A=**	0.5	0.7	0.91	1.2	1.51	1.8	2.12	2.5	3.03	3.5	4.4

Mounting plates	pages 9.37-9.42
Flat head screws	pages 12.7-12.8, 12.12

Dimensional data not binding. Dimensions in mm, inches are approximate. We reserve the right to alter specifications without notice.

Salice

→ 200 Series

Half overlay self-close shown

> Door thickness: 16–26 mm (5/8"–1")
> Tab: 3–6 mm (1/8"–1/4")
> Material: Steel; Finish: nickel-plated

Max. door offset at 120°

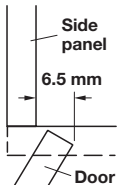

With straight arm BP = 0 mm

Protrusion shown is based on straight arm and smallest available mounting plate.

Opening angle: 120°

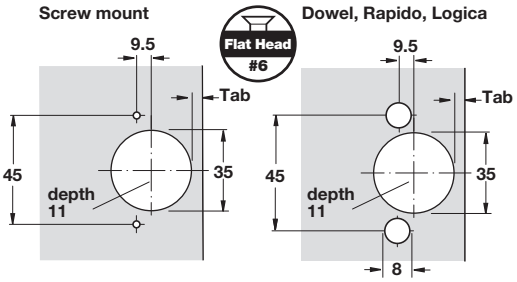

Closing method	Mounting	Overlay	Hinge arm	Model	Item No.
Self-close	screw	full		C2P9A99	329.03.503
Self-close	screw	half		C2P9G99	329.03.512
Self-close	dowel	full		C2R9A99	329.03.558
Self-close	dowel	1/2"		C2R9D99	329.03.568
Self-close	dowel	half		C2R9G99	329.03.567
Self-close	Rapido	full		C279A99	329.03.580
Self-close	Rapido	1/2"		C279D99	329.03.581
Self-close	Rapido	half		C279G99	329.03.582
Free-swinging	Rapido	full		C278A99	329.02.580
Self-close	Logica	full		C2J9A99	329.03.590
Self-close	Logica	1/2"		C2J9D99	329.03.591
Self-close	Logica	half		C2J9G99	329.03.592

Space needed to open the door:

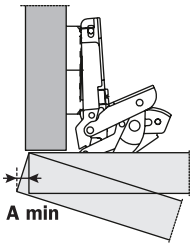

	T=	16	17	18	19	20	21	22	23	24	25	26
K=3	**A=**	1.01	1.3	1.61	1.9	2.23	3.5	5.06	6.5	8.19	9.6	11.2
K=4	**A=**	1.01	1.3	1.51	1.9	2.22	2.5	4.05	5.5	7.18	8.6	10.2
K=5	**A=**	1.01	1.2	1.51	1.8	2.12	2.5	3.04	4.5	6.17	7.6	9.2
K=6	**A=**	1.01	1.2	1.51	1.8	2.12	2.4	2.83	3.5	5.16	6.6	8.1

Mounting plates	pages 9.37-9.42
Flat head screws	pages 12.7-12.8, 12.10, 12.13

Dimensional data not binding. Dimensions in mm, inches are approximate. We reserve the right to alter specifications without notice.

Salice

→ Wide Angle

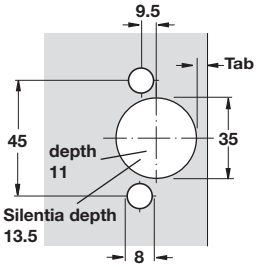

Flat Head #6

> Door Thickness:
  Silentia+: max. 28 mm (1 1/8") 165°
  Self: max. 32 mm (1 1/4")
> Tab: 3–8 mm (1/8"–5/16")
> Zero protrusion on 155° full overlay, 2 mm (1/16") plate with 4.5 mm (3/16") tab
> For 9 mm (3/8") lip door application use inset 165° with 3 plate
> Material: Cup: Zinc die-cast; 165° Cup: Steel/Stainless Steel
  Finish: nickel-plated

Opening angle	Closing method	Mounting	Overlay	Hinge arm	Model	Item No.
155°	Silentia+	screw	full		C2PKAE9	329.61.107
155°	Silentia+	screw	half		C2PKGE9	329.61.108
155°	Silentia+	dowel	full		C2RKAE9	329.61.117
155°	Silentia+	dowel	half		C2RKGE9	329.46.218
155°	Silentia+	dowel	inset		C2RKPE9	329.46.228
155°	self-close	screw	full		C2PKA99	329.60.500
155°	self-close	screw	half		C2PKG99	329.60.502
155°	self-close	dowel	full		C2RKA99	329.60.510
155°	self-close	dowel	half		C2RKG99	329.60.512
165°	self-close	screw	full		C2PFA99	329.07.609
165°	self-close	screw	half		C2PFG99	329.07.618
165°	self-close	screw	inset		C2PFP99	329.07.620
165°	self-close	dowel	full		C2RFA99	329.07.654
165°	self-close	dowel	1/2"		C2RFD99	329.07.662
165°	self-close	dowel	half		C2RFG99	329.07.663
165°	self-close	dowel	inset		C2RFP99	329.07.670
165°	self-close	Rapido	full		C27FA99	329.07.680
165°	self-close	Rapido	half		C27FG99	329.07.681
165°	self-close	Rapido	inset		C27FP99	329.07.682
165°	self-close	Logica	full		C2JFA99	329.07.690
165°	self-close	Logica	half		C2JFG99	329.07.692
165°	self-close	Logica	inset		C2JFP99	329.07.693

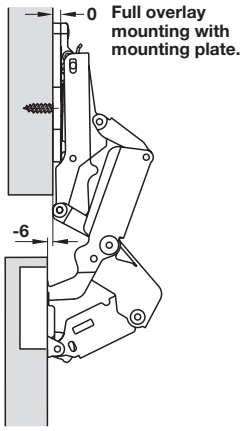

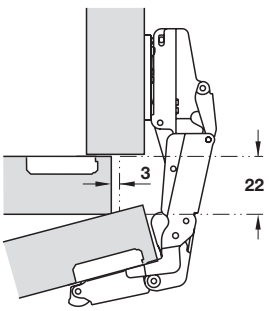

At opening angle of 90° and mounting plate height = 0 mm, the door swings out laterally 2 mm when opened.

Mounting plates	pages 9.37-9.42
Flat head screws	pages 12.7-12.8, 12.10, 12.13

Dimensional data not binding. Dimensions in mm, inches are approximate. We reserve the right to alter specifications without notice.

Salice

→ 700 Series Silentia+

> Impervious to temperature extremes
> Door thickness: 16-26 mm (5/8"-1")
> Tab: 3-6 mm (1/8"-1/4")
> Exceeds ANSI/BHMA standards. A156.9 2010
> Material: Steel

Opening angle: 110°

> Finish: nickel-plated

Mounting	Overlay	Hinge	Model	Item No.
Screw	full		C7P6AE9	329.15.400
Screw	1/2"		C7P6DE9	329.17.106
Screw	half		C7P6GE9	329.15.402
Screw	inset		C7P6PE9	329.15.404
Dowel	full		C7R6AE9	329.17.117
Dowel	1/2"		C7R6DE9	329.17.116
Dowel	half		C7R6GE9	329.17.118
Dowel	inset		C7R6PE9	329.17.119
Rapido	full		C776AE9	329.17.127
Rapido	1/2"		C776DE9	329.17.126
Rapido	half		C776GE9	329.17.128
Rapido	inset		C776PE9	329.17.129
Logica	full		C7J6AE9	329.15.430
Logica	1/2"		C7J6DE9	329.17.136
Logica	half		C7J6GE9	329.15.432
Logica	inset		C7J6PE9	329.15.434

> Finish: titanium

Mounting	Overlay	Hinge	Model	Item No.
Logica	full		C7J6AE6	329.17.217
Logica	half		C7J6GE6	329.17.218
Logica	inset		C7J6PE6	329.17.219
Dowel	inset		C7R6PE6	329.17.464

Screw mount

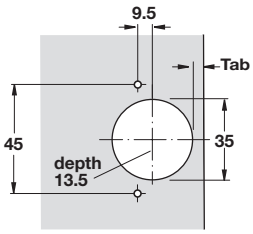

Dowel, Rapido, Logica

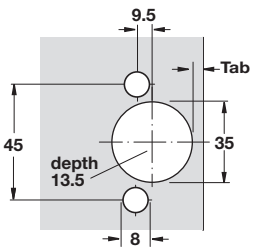

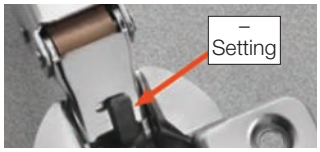

Soft close engages at 10 degrees from the face of the cabinet.

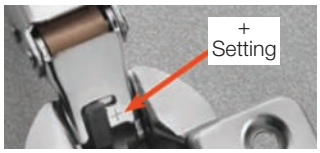

Soft close engages at 30 degrees from the face of the cabinet.

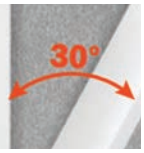

Mounting plates	pages 9.37-9.42
Flat head screws	pages 12.7-12.8, 12.10, 12.13

Dimensional data not binding. Dimensions in mm, inches are approximate. We reserve the right to alter specifications without notice.

Salice – Special Application

→ Universal Folding Hinge

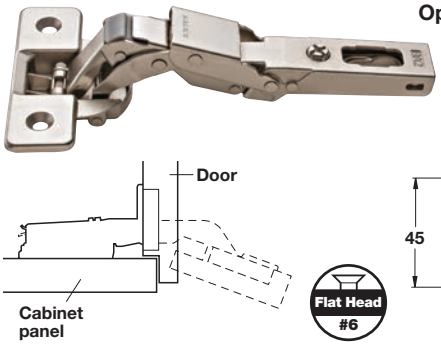

> Designed especially for lipped doors
> Cup depth of only 9 mm (11/32")
> Tab: 3–18 mm (1/8"–11/16")
> Can be used for miter doors
> For thick doors or doors with mouldings or with large radius edges, see page **9.34**
> Material: Steel; Finish: nickel-plated

Closing method	Mounting	Overlay	Hinge arm	Model	Item No.
Self-close	screw	full		CBP2AC9	329.26.624
Silentia+	screw	full		CBP2AE9	329.26.626

→ Pie-cut Corner Hinge

Mounting plate backset distance (X) varies according to door thickness.

door thickness	16 mm (5/8")	19 mm (3/4")	22 mm (7/8")
backset distance for mounting plates (X)	31 mm (1 1/4")	28 mm (1 1/8")	25 mm (1")

Mounting plate type varies according to door thickness.

door thickness	16 mm (5/8")	19 mm (3/4")	22 mm (7/8")
mounting plate height	6	2 or 3	0
tab	4 mm (5/32")	4 mm (5/32")	4 mm (5/32")

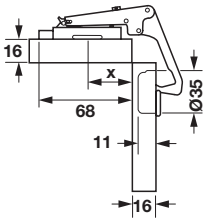

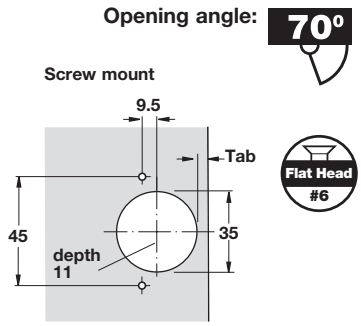

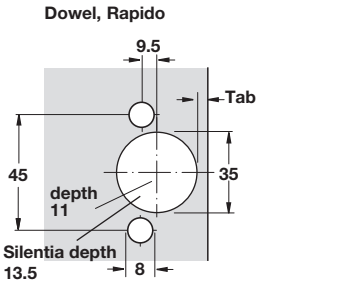

> Self-close
> Door thickness: 16–22 mm (5/8"–7/8")
> 11 mm (7/16") deep zinc die-cast cup
> Cup diameter: 35 mm (1 3/8")
> Opening angle of first door 70°
> Tab: 3–6 mm (1/4"–1/8")
> Material: Steel

> Finish: nickel-plated

Mounting	Model	Item No.
Screw	C2PYA99	329.19.600
Dowel	C2RYA99	329.19.610
Rapido	C27YA99	329.19.620

> Finish: titanium

Mounting	Model	Item No.
Dowel	C2RYA66	329.19.640

The maximum space required to accommodate the hinge is 68 mm (2 11/16") with 16 mm (5/8") thick doors. With thicker doors the amount of space required is reduced.

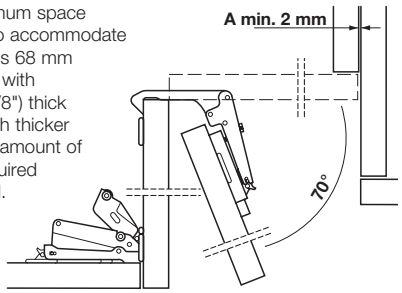

Mounting plates	pages 9.37-9.42
Flat head screws	pages 12.7-12.8, 12.10, 12.13
Trim caps	page 9.45

Dimensional data not binding. Dimensions in mm, inches are approximate. We reserve the right to alter specifications without notice.

Salice – Special Application

→ Blind Corner Hinges

> Door thickness: 16–26 mm (5/8"–1")
> Tab: 3-8 mm (1/8"–5/16"); 3–6 mm (1/8"–1/4") Silentia +
> Material: Steel; Finish: nickel-plated

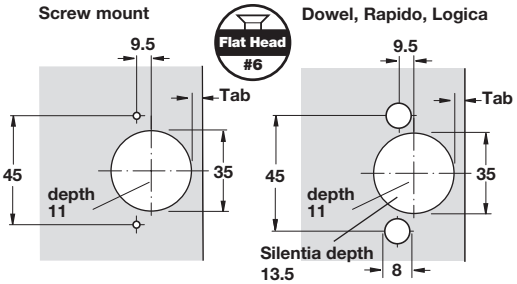

Opening angle	Closing method	Mounting	Overlay	Model	Item No.
94°	self-close	screw	inset	C2PBN99AC	329.11.506
110°	Silentia+	screw	inset	C7P6NE9AC	329.11.100
94°	self-close	dowel	inset	C2RBN99AC	329.31.515
110°	self-close	dowel	overlay	C2R6N99AM	329.35.510
110°	Silentia+	dowel	inset	C7R6NE9AC	329.11.110
110°	Silentia+	dowel	overlay	C7R6NE9AM	329.35.117
94°	self-close	Rapido	inset	C27BN99AC	329.11.585
110°	Silentia+	Logica	inset	C7J6NE9AC	329.11.120

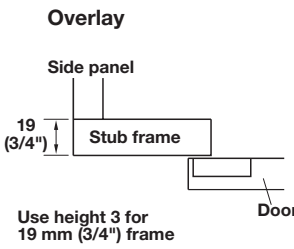

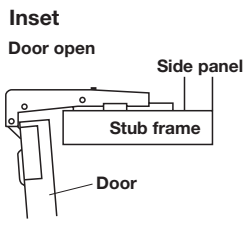

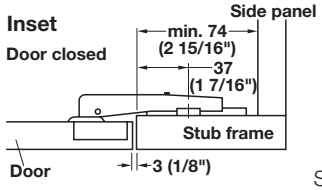

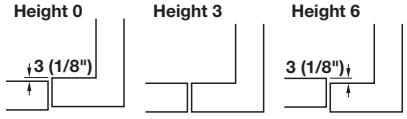

Single-side mounting (corner or center panel frame) installation diagrams with mounting plate heights **0**, **3**, **6.**

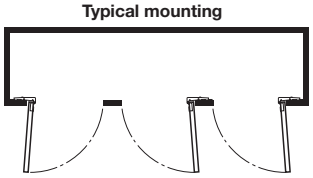

Mounting plates	pages 9.37-9.42
Flat head screws	pages 12.7-12.8, 12.10, 12.13
Trim caps	page 9.45

Dimensional data not binding. Dimensions in mm, inches are approximate. We reserve the right to alter specifications without notice.

Salice – Special Application

soft&silent

> Door thickness: 16–35 mm (5/8"–1 3/8")
> For 45° corner application
> Tab: 3–9 mm (1/8"–11/32"); 3–6 mm (1/8"–1/4") Silentia
> Material: Steel; Finish: nickel-plated

→ +45° Corner Hinges

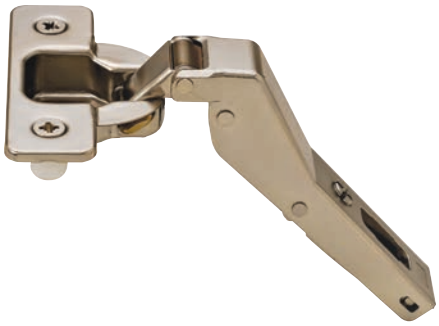

Typical mounting

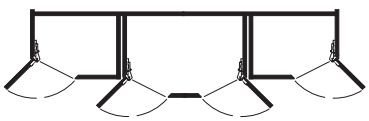

16 mm use #3 Mounting plate
19 mm use #0 Mounting plate **Tab = 4**

Screw mount

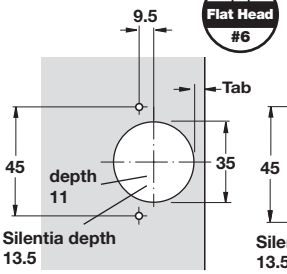

Dowel

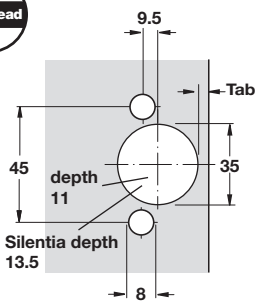

Opening angle	Closing method	Mounting	Overlay	Model	Item No.
94°	self-close	screw	overlay	C2PBM99AC	329.96.507
110°	Silentia+	dowel	overlay	C7R6VE9	329.25.448
94°	self-close	dowel	overlay	C2RBM99AC	329.96.517
110°	Silentia+	dowel	overlay	C7R6ME9AC	329.25.117
110°	Silentia+	dowel	overlay	C7R6ME9	329.25.447

→ -45° Corner Hinges

Flat Head
#6

Opening angle: 120°

> Self-close
> Door thickness: 16–26 mm (5/8"–1")
> Tab: 3-9 mm (1/8"–11/32")

Mounting	Overlay	Model	Item No.
Rapido	full	C27BH99	329.09.591

Rapido

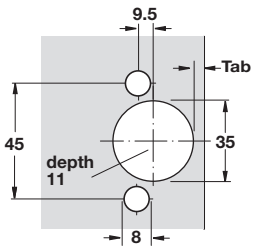

19 mm Overlay

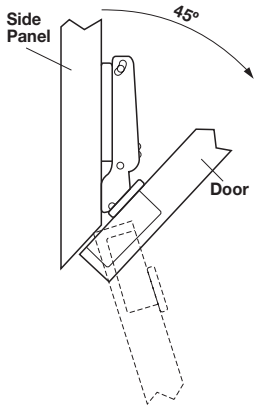

Mounting plates	pages 9.37-9.42
Flat head screws	pages 12.7-12.8, 12.10, 12.13
Trim caps	page 9.45

Dimensional data not binding. Dimensions in mm, inches are approximate. We reserve the right to alter specifications without notice.

Salice – Special Application

> Mounting solutions with special corner mountings (examples).

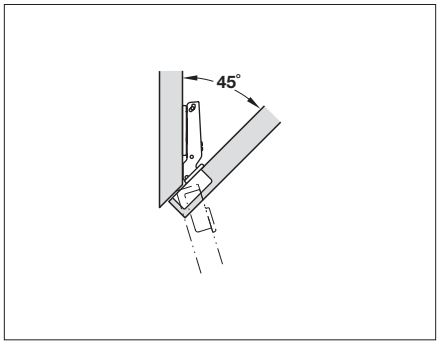

Concealed hinge 329.09.591 / page **9.27**
Mounting plate 329.71.500 / page **9.38**

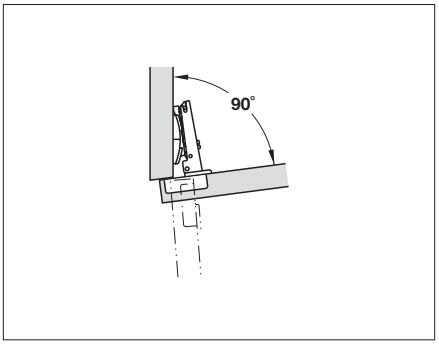

Concealed hinge 329.28.500 / page **9.18**
Mounting plate 329.84.110 / page **9.42**

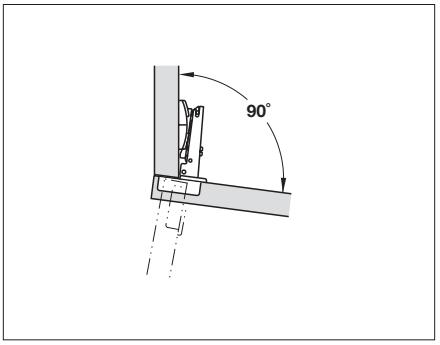

Concealed hinge 329.28.500 / page **9.18**
Mounting plate 329.84.110 / page **9.42**

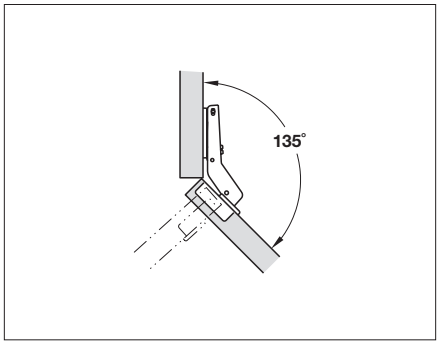

Concealed hinge 329.25.447 / page **9.27**
Mounting plate 329.71.500 / page **9.38**

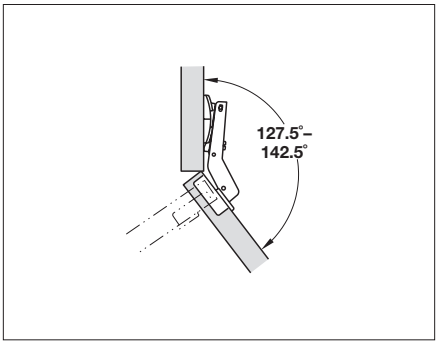

Concealed hinge 329.96.507 / page **9.27**
Mounting plate 329.84.110 / page **9.42**

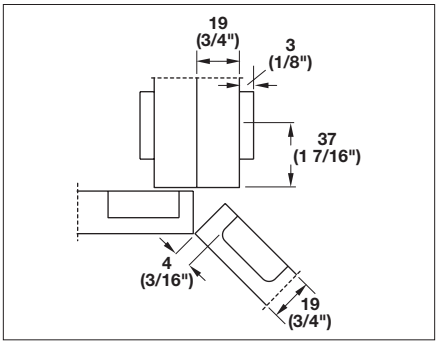

Concealed hinge 329.96.507 / page **9.27**
Mounting plate 329.71.110 / page **9.38**

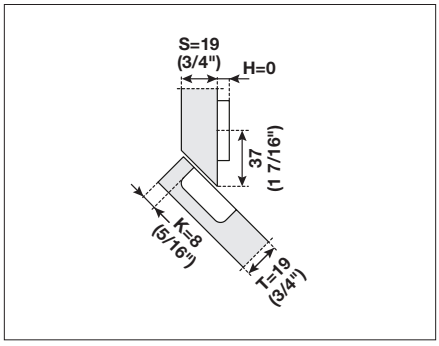

Concealed hinge 329.25.448 / page **9.27**

Dimensional data not binding. Dimensions in mm, inches are approximate. We reserve the right to alter specifications without notice.

Salice – Special Application

> Special application examples with rounded, rebated and profiled door.

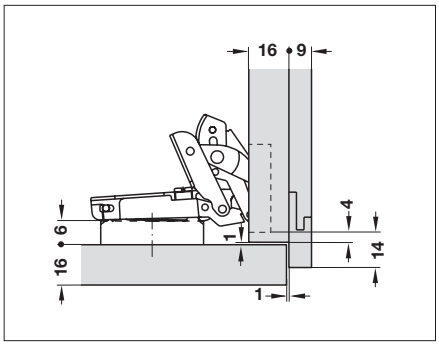

Concealed hinge 329.26.624 / page **9.34**
Mounting plate 329.71.506 / page **9.38**

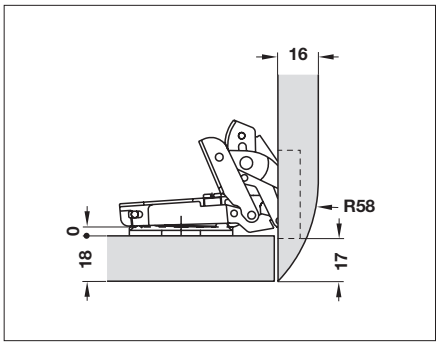

Concealed hinge 329.26.624 / page **9.34**
Mounting plate 329.71.500 / page **9.38**

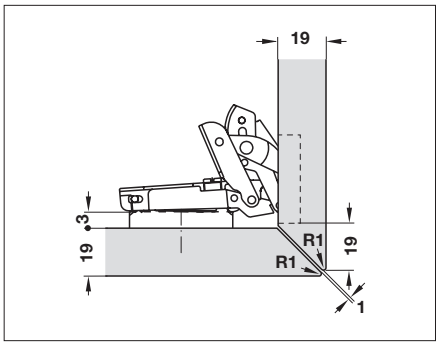

Concealed hinge 329.26.624 / page **9.34**
Mounting plate 329.71.503 / page **9.38**

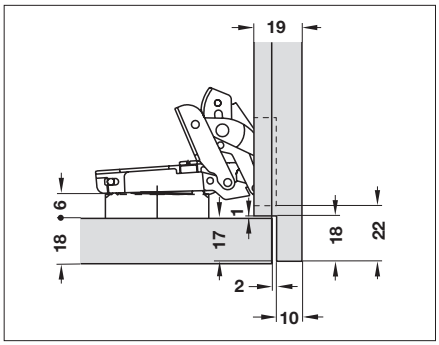

Concealed hinge 329.26.624 / page **9.34**
Mounting plate 329.71.506 / page **9.38**

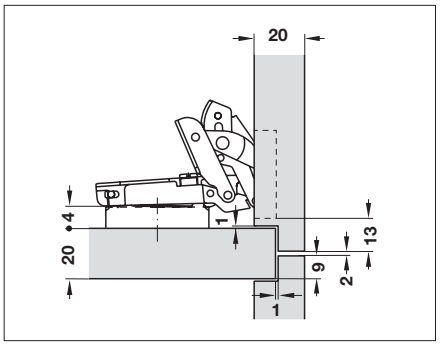

Concealed hinge 329.26.624 / page **9.34**
Mounting plate 329.71.503 / page **9.38**

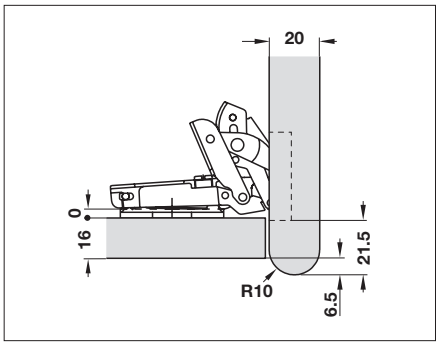

Concealed hinge 329.26.624 / page **9.34**
Mounting plate 329.71.500 / page **9.38**

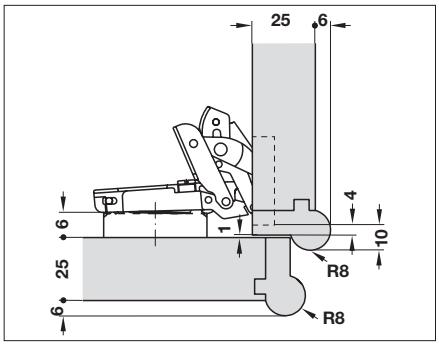

Concealed hinge 329.26.624 / page **9.34**
Mounting plate 329.71.506 / page **9.38**

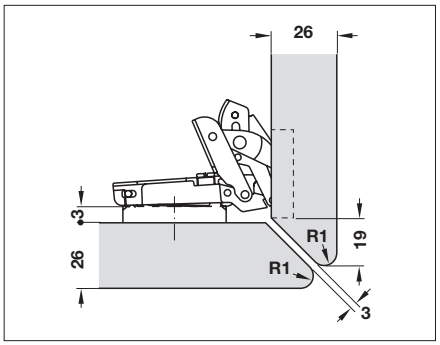

Concealed hinge 329.26.624 / page **9.34**
Mounting plate 329.71.503 / page **9.38**

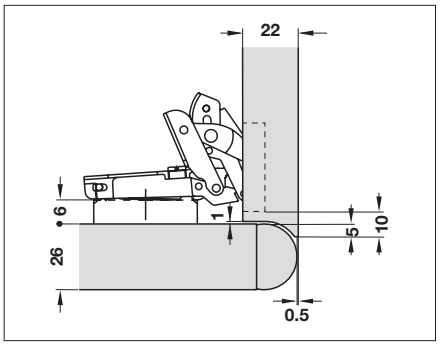

Concealed hinge 329.26.624 / page **9.34**
Mounting plate 329.71.506 / page **9.38**

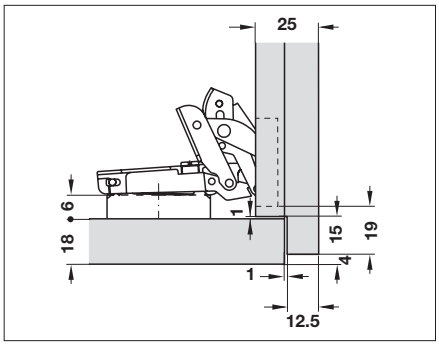

Concealed hinge 329.26.624 / page **9.34**
Mounting plate 329.71.506 / page **9.38**

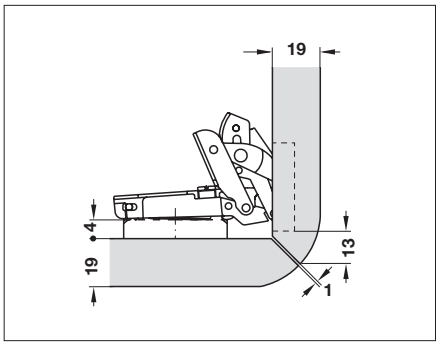

Concealed hinge 329.26.624 / page **9.34**
Mounting plate 329.71.503 / page **9.38**

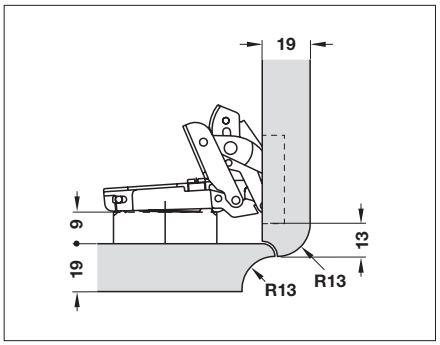

Concealed hinge 329.26.624 / page **9.34**
Mounting plate 329.71.508 / page **9.38**

Dimensional data not binding. Dimensions in mm, inches are approximate. We reserve the right to alter specifications without notice.

Salice PUSH System

> Developed to meet the market trend of handle-less furniture
> Self-opening hinges and release devices that can easily be mounted to your furniture
> Door thickness: 16–26 mm (5/8"–1") for 110°
> Door thickness: 16–28 mm (5/8"–1 1/8") for 155° and 165°
> Tab: 3–6 mm (1/8"–1/4") for 110°
> Tab: 3–9 mm (1/4"–3/8") for 155° and 165°
> Allows for a very "clean" design appearance
> Reverse-spring hinges help "PUSH" the door open
> Material: Steel; Finish: nickel-plated

→ 110° Hinge

Opening angle: 110°

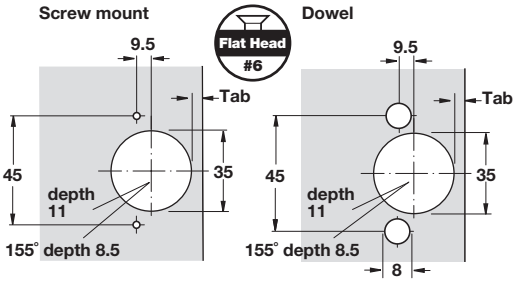

Mounting	Overlay	Hinge arm	Model	Item No.
Screw	full		C2PPA99	329.17.800
Screw	half		C2PPG99	329.17.802
Screw	inset		C2PPP99	329.17.803
Dowel	full		C2RPA99	329.17.810
Dowel	half		C2RPG99	329.17.812
Dowel	inset		C2RPP99	329.17.813

→ Wide Angle Hinge

Opening angle	Mounting	Overlay	Hinge arm	Model	Item No.
155°	screw	full		C2PSA99	329.07.800
155°	screw	half		C2PSG99	329.07.802
155°	dowel	full		C2RRA99	329.27.814
155°	dowel	half		C2RRG99	329.27.815
155°	dowel	inset		C2RRP99	329.27.816

Mounting plates	pages 9.37-9.42
Push latches and catches	pages 9.31-9.32
Flat head screws	pages 12.7-12.8, 12.10, 12.13
Trim caps	page 9.45

Dimensional data not binding. Dimensions in mm, inches are approximate. We reserve the right to alter specifications without notice.

Salice

> Two push latches are recommended for doors taller than 1600 mm (63")
> Aim hooks toward hinges
> Depth adjustment: -1/+2.5 mm by rear wheel
> Lateral adjustment: +/- 2 mm by elongated mounting holes
> Material: Plastic

→ PUSH Latch

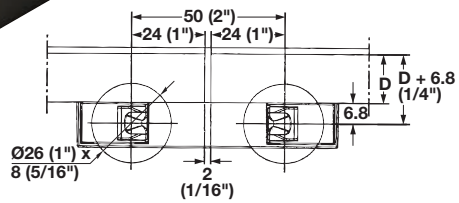

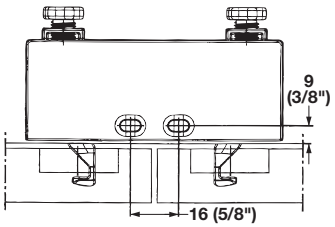

D = Door overlay on side and top of the cabinet

Type	Color	Model	Item No.
Single	black	DP4SN3	329.44.371
Single	beige	DP4SNB	329.44.471
Sinlge - no lip	black	DP3SN3R	329.44.301
Double	black	DP5SN3	329.44.391

Supplied With Mounting screws, Cover caps

→ Catch

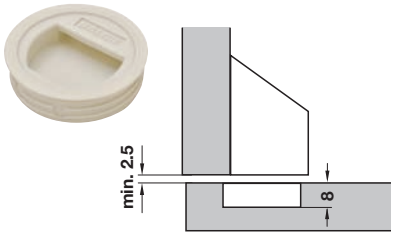

Door catch

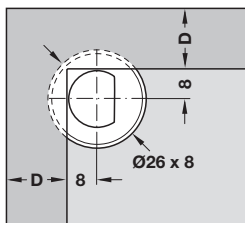

D = Door overlay on side and top.
Drilling distance to center of catch = D + 8

> For overlay doors
> Press-fit
> Material: Plastic

Color	Model	Item No.
black	DP29SN3	329.44.332
beige	DP29SNB	329.44.432

Flat head screws pages 12.7-12.8, 12.10, 12.13

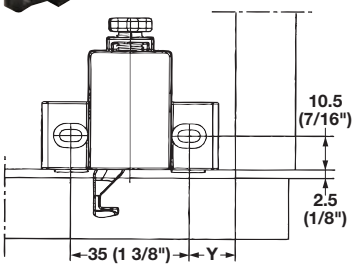

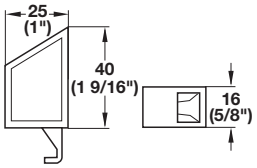

D = Door overlay on side and top of the cabinet
Y = min. 8.5 mm

→ Catch

Flat Head
#6

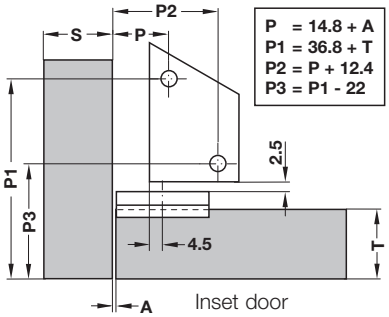

P = 14.8 + A
P1 = 36.8 + T
P2 = P + 12.4
P3 = P1 - 22

Inset door

Door catch

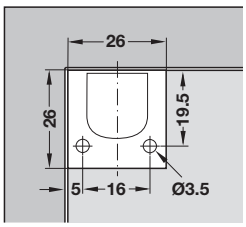

Inset door

> For inset doors
> Screw mounted
> Material: Plastic

Type	Color	Model	Item No.
With lip	black	DP29SN3I	329.44.330
Without lip	black	DP29SN3R	329.44.331
Without lip	beige	DP29SNBR	329.44.431

Dimensional data not binding. Dimensions in mm, inches are approximate. We reserve the right to alter specifications without notice.

Salice

→ Release Device

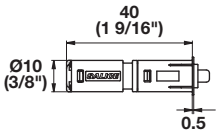

> Material: Plastic

Color	Model	Item No.
beige	DPMSNB	356.06.462

Note
Order catch below.

→ Retaining Catch with Pin

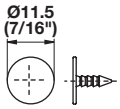

> Nail-on
> Installation:
1) Apply the retaining catch to the magnetic release device
2) Close the door
3) The point of the retaining catch will show where to insert it
4) Reopen the door and press the retaining catch
> Material: Steel

Finish	Model	Item No.
nickel-plated	DP28SN9	356.06.464

→ Adjustable Magnetic Catch

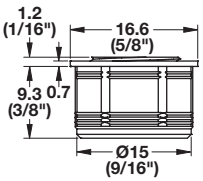

> Inserts into the door
> Increases holding power
> Ideal for large heavy doors
> Features depth adjustment
> Ø x D: 15 x 11 mm (9/16" x 7/16")
> Material: Housing: Plastic; Plate: Steel

Finish	Model	Item No.
gray	DP39XXG	356.06.466

→ Magnetic Device

> For heavy doors
> Magnetic device to be used to increase the magnetic holding strength
> It must always be used together with the DPM (356.06.462)
> The suggested position of the DPM is the point of pressure on the door
> The DPA can be positioned at any point along the opening edge of the door
> Material: Plastic

Color	Model	Item No.
beige	DPASNB	356.06.472

→ Magnetic PUSH Device Adapter

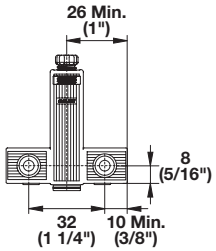

> Surface mount with wood screws
> Adjustable
> With assembly stop tabs
> Material: Plastic

Color	Model	Item No.
beige	DP84SNBR	356.06.420

→ Retaining Catch with Adhesive Strip

> Adhesive backed
> Material: Steel

Finish	Model	Item No.
nickel-plated	DP38XX91	356.06.465

Dimensional data not binding. Dimensions in mm, inches are approximate. We reserve the right to alter specifications without notice.

Salice Lapis 110°

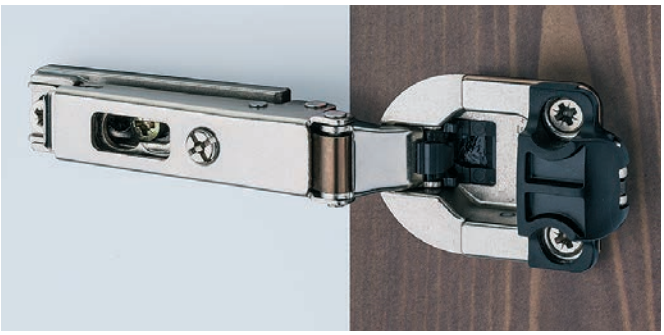

For standard applications
Lapis offers an aesthetic look and added value for furniture.
Reliable technology with high-quality designer cover caps.

> With +/- adjustability
> Three-dimensional front adjustment
> High-quality cover caps in different finishes that move synchronously with the hinge elements

> Special preparation of door or cabinet side panel is not required
> Door thickness: 16–26 mm (5/8"–1")
> Tab: 3–6 mm (1/8"–1/4")

Drilling pattern for cup fixing

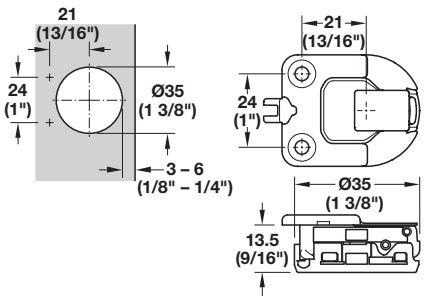

soft&silent

→ 110° Hinge

> Screw mounted
> Material: Cup: Zinc Alloy/Plastic
Arm: Steel

Finish	Model	Item No.
nickel-plated	C716AE9	329.08.505

Note
Half overlay mounting available on request.
Order mounting plate and cover cap separately.

→ Cover Cap Set

> Material: Plastic

Color	Cabinet side	Door side
white, matt	329.08.780	329.08.791
black, metallized, matt	329.08.390	329.08.391
chrome-plated, polished	329.08.290	329.08.291

Cover cap installation

Mounting plates page 9.41

Dimensional data not binding. Dimensions in mm, inches are approximate. We reserve the right to alter specifications without notice.

Salice

→ Thick Door Hinges

Opening angle: 94°

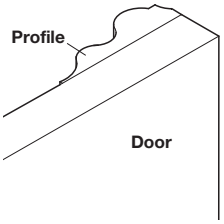

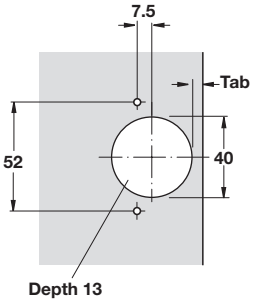

Flat Head #6

> Designed for unusual applcations
> For heavy thick doors - inset up to 40 mm (1 9/16") or overlays up to 34 mm (1 5/16")
> For heavy thick doors 19–38 mm (3/4"–1 1/2")
> 40 mm (1 9/16") cup
> Tab: 3–15 mm (1/8"–9/16")
> Material: Cup: Zinc, die-cast; Hinge arm: Steel

Note
Call technical support for minimum reveal specs

Finish	Closing method	Mounting	Overlay	Hinge arm	Model	Item No.
nickel-plated	self-closing	screw	full		CFA7A99	329.05.605
titanium	self-closing	screw	full		CFA7A66	329.05.606
nickel-plated	self-closing	screw	half		CFA7G99	329.05.614
titanium	self-closing	screw	half		CFA7G66	329.05.615
nickel-plated	self-closing	screw	inset		CFA7P99	329.05.632
titanium	self-closing	screw	inset		CFA7P66	329.05.633
nickel-plated	free-swinging	screw	full		CFA5A99	329.04.608
nickel-plated	free-swinging	screw	half		CFA5G99	329.04.617
nickel-plated	free-swinging	screw	inset		CFA5P99	329.04.635

Mounting plates	pages 9.37-9.42
Flat head screws	pages 12.7-12.8, 12.10, 12.13

Dimensional data not binding. Dimensions in mm, inches are approximate. We reserve the right to alter specifications without notice.

Salice

→ Mounting examples for profiled doors with thick door hinge

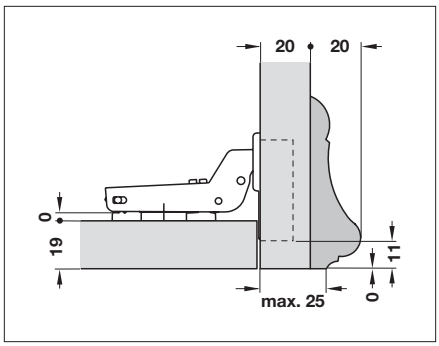

Concealed hinge 329.05.614 / page **9.34**
Mounting plate 329.71.500 / page **9.38**

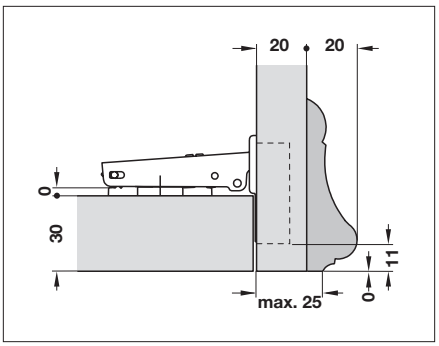

Concealed hinge 329.05.605 / page **9.34**
Mounting plate 329.71.500 / page **9.38**

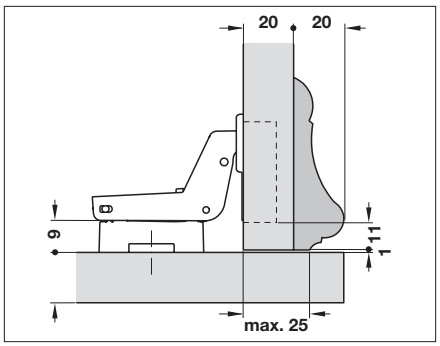

Concealed hinge 329.05.632 / page **9.34**
Mounting plate 329.71.508 / page **9.38**

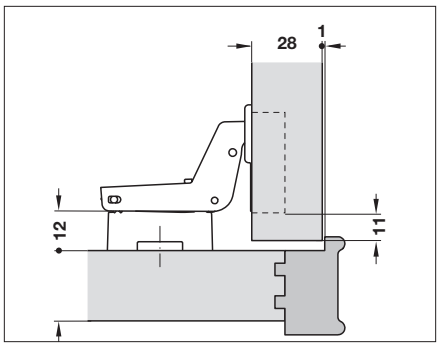

Concealed hinge 329.05.632 / page **9.34**
Mounting plate 329.71.509 / page **9.38**

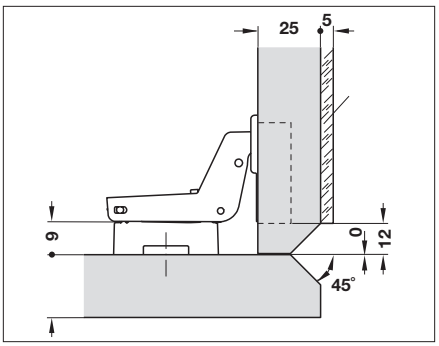

Concealed hinge 329.05.632 / page **9.34**
Mounting plate 329.71.508 / page **9.38**

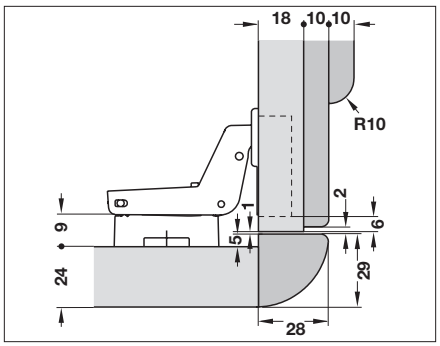

Concealed hinge 329.05.632 / page **9.34**
Mounting plate 329.71.508 / page **9.38**

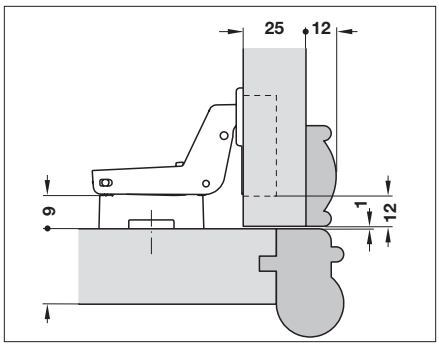

Concealed hinge 329.05.632 / page **9.34**
Mounting plate 329.71.508 / page **9.38**

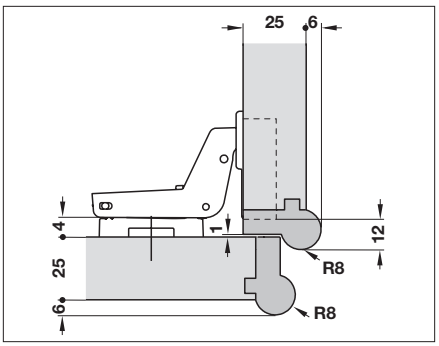

Concealed hinge 329.05.632 / page **9.34**
Mounting plate 329.71.503 / page **9.38**

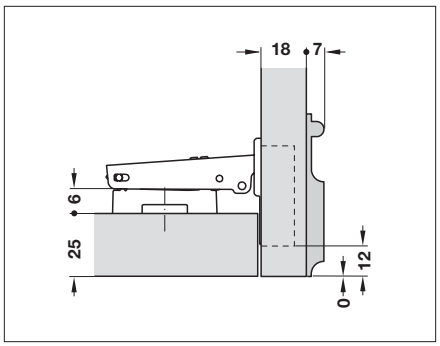

Concealed hinge 329.05.605 / page **9.34**
Mounting plate 329.71.506 / page **9.38**

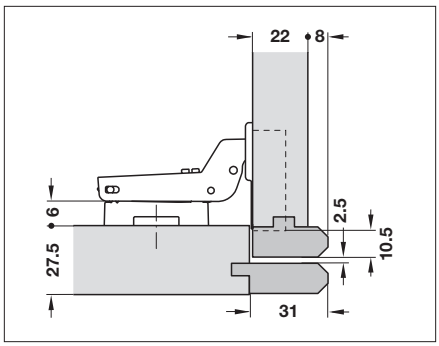

Concealed hinge 329.05.614 / page **9.34**
Mounting plate 329.71.506 / page **9.38**

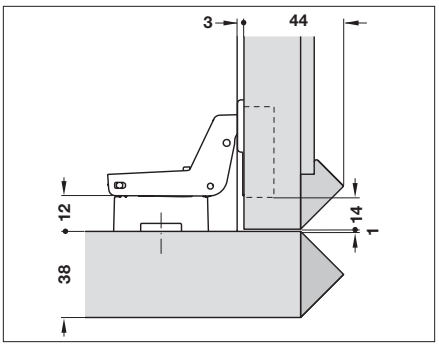

Concealed hinge 329.05.632 / page **9.34**
Mounting plate 329.71.509 / page **9.38**

Dimensional data not binding. Dimensions in mm, inches are approximate. We reserve the right to alter specifications without notice.

Salice Air

> Door thickness: min. 18 mm (3/4")
> Drilling distance on wood doors (K): from 3–6 mm (1/8"–1/4")
> Adjustment: Side: +/-2 mm; Depth: +2/-.5 mm; Height: +/-1.5 mm
> Door weight: max. 20 kg (44 lbs.)
> W x H: max. 610 x 2100 mm (24" x 84")
> L x W x D: 60 x 70 x 10 mm (2 3/8" x 2 3/4" x 3/8")
> Ø: 16.5 (5/8") stepped mortice in door
42 mm (1 11/16") stepped mortice in cabinet
> Material: Zinc

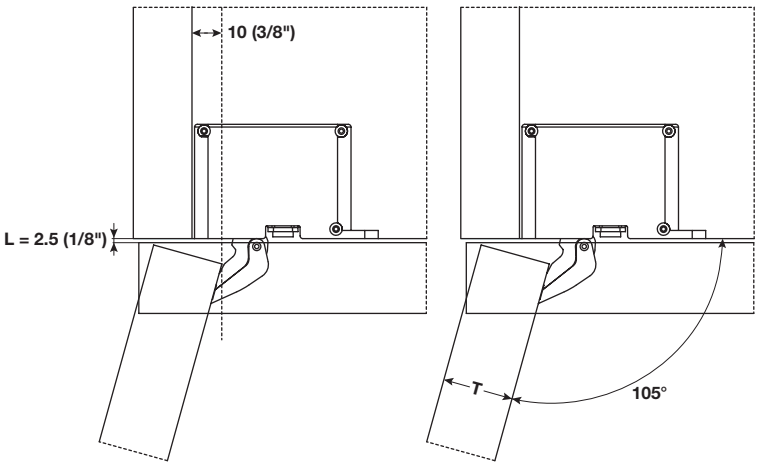

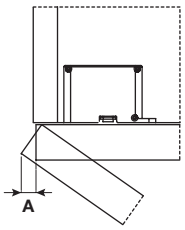

Opening angle: 105°

Projection of the door from the cabinet side at the max. opening. The figures are based on K value = 3 mm (1/8") and door overlay = 19 mm (3/4").

	T=	18	20	22	24	26	28	30	32
K=3	**A=**	0	0.2	0.5	0.8	2.3	4.9	7.5	10.0
K=4	**A=**	0	0.2	0.4	0.8	1.3	3.9	6.5	9.0
K=5	**A=**	0	0.2	0.4	0.8	1.3	2.9	5.5	8.0
K=6	**A=**	0	0.2	0.4	0.8	1.2	1.9	4.5	7.0

→ Air Hinge, soft close

soft&silent

Finish	Model No.	Item No.
nickel-plated	CEL6XE9XXV	329.97.520
titanium	CEL6XE6XXV	329.97.530

Supplied With
2 hinges
Installation screws

→ Air Hinge Push

Finish	Model No.	Item No.
nickel-plated	CELPX99XXV	329.97.820
titanium	CELPX66XXV	329.97.830

Supplied With
2 hinges
Installation screws

Note
For required push release, see page **9.31-9.32**

Dimensional data not binding. Dimensions in mm, inches are approximate. We reserve the right to alter specifications without notice.

Salice

→ Clip Mounting Plate

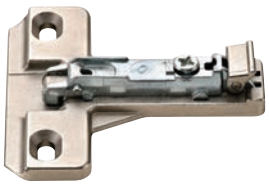

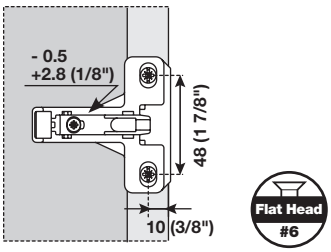

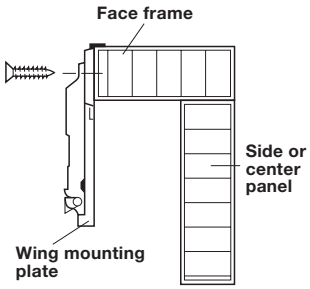

> Screw mounted
> Spring lever
> Vertical adjustment - oblong holes

Height	Material	Finish	Overlay	Model	Item No.
1	Steel	nickel-plated	3/4"	BAU3L19	329.64.531
1	Zinc die-cast	nickel-plated	3/4"	BAU3E19	329.64.631
4	Steel	nickel-plated	1/2"	BAU3L49	329.64.540
4	Zinc die-cast	nickel-plated	1/2"	BAU3E49	329.64.640

→ Clip Mounting Plate

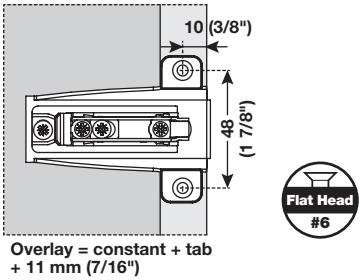

> Screw mounted
> For large overlay face-frame applications
> Material: Zinc die-cast; Finish: nickel-plated

Height	Model	Item No.
11	BAM3R09	329.82.640

→ Clip Mounting Plate

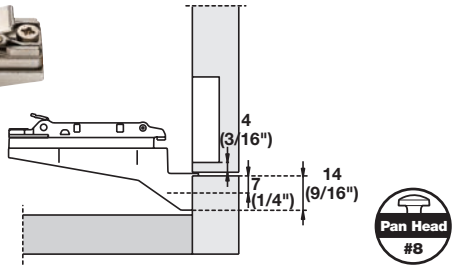

> Screw mounted
> For inset application
> Spring lever
> 2 cam independent depth and vertical adjustment
> To be used with half overlay hinge
> Material: Zinc die-cast

Height	Finish	Model	Item No.
13.5	nickel-plated	BAL3R59	329.67.030
13.5	titanium	BAL3R56	329.67.031

→ Clip Mounting Plate

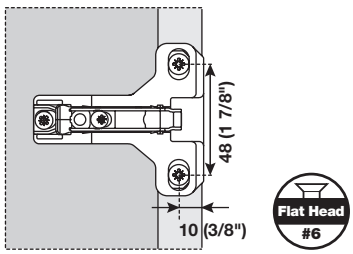

> Screw mounted
> Spring lever
> 2 cam independent depth and vertical adjustment
> Material: Zinc die-cast

Height	Finish	Overlay	Model	Item No.
1	nickel-plated	3/4"	BAU3R19	329.64.551
4	nickel-plated	1/2"	BAU3R49	329.64.554
6	nickel-plated	7/16"	BAU3R69	329.64.555
1	titanium	3/4"	BAU3R16	329.64.571
4	titanium	1/2"	BAU3R46	329.64.574

Pan head screws	pages 12.9-12.10
Flat head screws	pages 12.7-12.8, 12.10, 12.13

Dimensional data not binding. Dimensions in mm, inches are approximate. We reserve the right to alter specifications without notice.

Salice

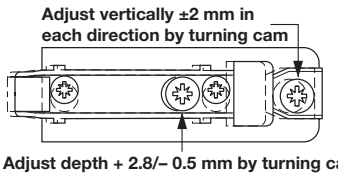

> Automatic Adjustment Response feature: a slight turn of the depth adjustment cam or vertical cam quickly positions hinge eliminating need for manual positioning by loosening screws.

→ Clip Mounting Plate

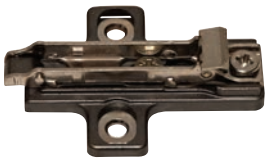

Hole pattern

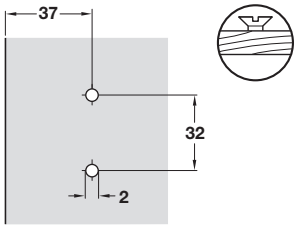

> Screw mounted
> Spring lever
> With independent vertical and depth adjustment with cam
> Material: Steel/Zinc

Height	Model	titanium	Model	nickel-plated
0	BAR3R06	329.71.507	BAR3R09	329.71.500
2	BAR3R26	329.71.582	BAR3R29	329.71.502
3	-	-	BAR3R39	329.71.503
6	-	-	BAR3R69	329.71.506
9	-	-	BAR3R99	329.71.508
12	BAR3RC6	329.71.622	BAR3RC9	329.71.509
18*	BAR3RV6	329.71.623	BAR3RV9	329.71.579
21*	-	-	BAR3RZ9	329.71.573
24*	-	-	BAR3RY9	329.71.576
27*	-	-	BAR3RU9	329.71.577
30*	-	-	BAR3RM9	329.71.578

→ Clip Mounting Plate

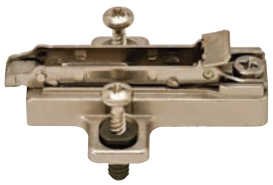

Hole pattern

SYSTEM VARIANTA 32

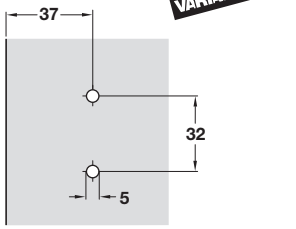

> Mounted in system holes with expandable 5 mm (3/16") dowels
> Spring lever
> With independent vertical and depth adjustment with cam
> Material: Steel/Zinc; Finish: nickel-plated

Height	Model	Item No.
0	BAR4R09/16	329.71.520
2	BAR4R29/16	329.71.522
3	BAR4R39/16	329.71.523
6	BAR4R69/16	329.71.526

Note Vertical & depth adjustments made with Pozi drive #2.

→ Clip Mounting Plate

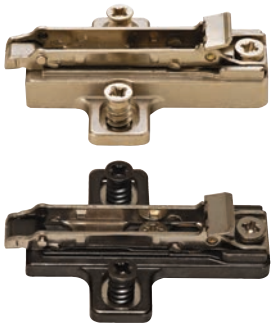

Hole pattern

SYSTEM VARIANTA 32

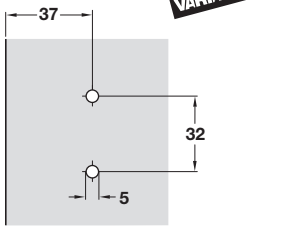

> Screw mounted in system holes
> Spring lever
> Pre-installed 11 mm (7/16") euro screws
> With independent vertical and depth adjustment with cam
> Material: Steel/Zinc

Height	Model	titanium	Model	nickel-plated
0	-	-	BARGR09/16	329.71.510
2	BARGR26/16	329.71.562	BARGR29/16	329.71.512
3	-	-	BARGR39/16	329.71.513
6	-	-	BARGR69/16	329.71.516
9	-	-	BARGR99/16	329.71.518
12	-	-	BARGRC9/16	329.71.519
18*	-	-	BARGRV9/16	329.71.559
21*	-	-	BARGRZ9/16	329.71.553
27*	-	-	BARGRU9/16	329.71.557
30*	-	-	BARGRM9/16	329.71.558

> For center/common panels
> Pre-installed 7.5 mm (5/16") euro screws
> Material: Steel/Zinc; Finish: nickel-plated

Height	Model	Item No.
0	BARGR09/20	329.71.530
3	BARGR39/20	329.71.533

Note
*Require 3rd screw #7 x 16 mm (5/8)

Flat head wood screws page 12.13

Dimensional data not binding. Dimensions in mm, inches are approximate. We reserve the right to alter specifications without notice.

Salice

Vertical and depth adjustments made with Pozi drive #2.

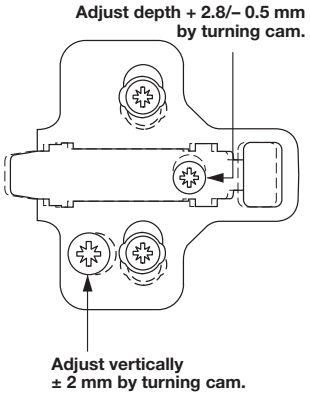

> Automatic Adjustment Response feature: a slight turn of the depth adjustment cam or vertical cam quickly positions hinge – eliminating need for manual positioning by loosening screws.
> Material: Steel; Finish: nickel-plated

Hole pattern

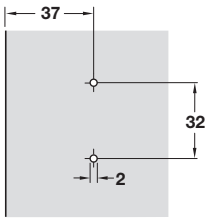

→ Clip Mounting Plate

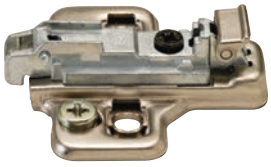

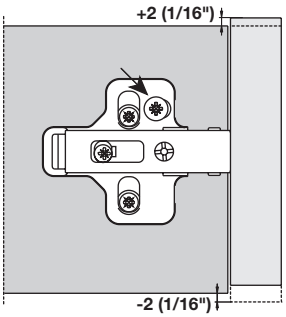

> Screw mounted
> Spring lever
> With vertical adjustment and depth adjustment with cam

Height	Model	Item No.
0	BAR3L09F	329.68.000
3	BAR3L39F	329.68.003
6	BAR3L69F	329.68.006

→ Clip Mounting Plate

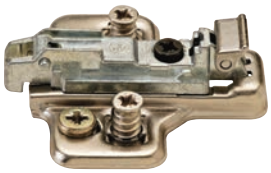

SYSTEM VARIANTA 32

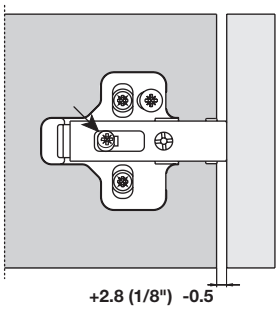

> Spring lever
> Pre-installed euro mounting screws in system holes
> 11 mm (7/16") length for single-side mounting
> With vertical adjustment and depth adjustment with cam

Height	Model	Item No.
0	BARGL09F/16	329.69.010
3	BARGL39F/16	329.69.013
6	BARGL69F/16	329.69.016

Flat head wood screws page 12.13

Dimensional data not binding. Dimensions in mm, inches are approximate. We reserve the right to alter specifications without notice.

Salice

> Depth adjustment with cam screw +2.8/-0.5 mm
> Spring level
> Vertical adjustment oblong holes
> Material: Steel; Finish: nickel-plated

→ Clip Mounting Plate

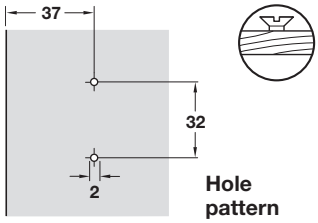

Hole pattern

> Screw mounted

Height	Model	Item No.
0	BAV3L09F	329.62.520
3	BAV3L39F	329.73.503

→ Clip Mounting Plate

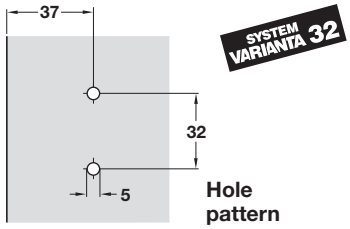

Hole pattern

> Pre-installed mounting screws
> 11 mm (7/16") length for single-side mounting

Height	Model	Item No.
0	BAVGL09F/16	329.73.510
3	BAVGL39F/16	329.85.043
6	BAVGL69F/16	329.73.516

> 7.5 mm (5/16") length for shared panel mounting

Height	Model	Item No.
0	BAVGL09F/20	329.73.520

Flat head wood screws page 12.13

Dimensional data not binding. Dimensions in mm, inches are approximate. We reserve the right to alter specifications without notice.

Salice

Vertical and depth adjustments made with Pozi drive #2.

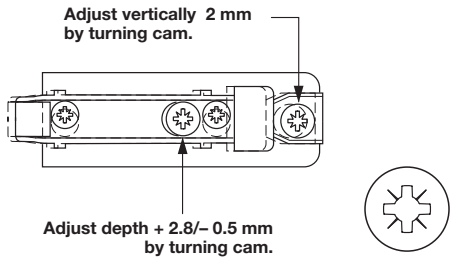

> Use with Lapis hinges
> Spring lever
> Independent vertical and depth adjustment with cam
> Material: Steel

→ Clip Mounting Plate

Hole pattern

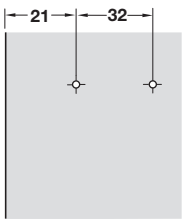

> Screw mounted with wood screws
> Finish: nickel-plated

Height	Model	Item No.
0	BAP3R09	329.67.040
3	BAP3R39	329.67.043
6	BAP3R69	329.67.046
9	BAP3R99	329.67.048

→ Clip Mounting Plate

Hole pattern

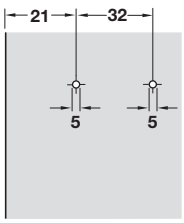

> Pre-installed euro mounting screws
> 11 mm (7/16") length for single-side mounting
> Finish: nickel-plated

Height	Model	Item No.
2	BAPGR29/16	329.67.002
3	BAPGR39/16	329.67.003

→ Clip Mounting Plate

> Pre-installed euro mounting screws
> 7.5 mm (5/16") length for shared panel mounting

Height	Finish	Model	Item No.
0	nickel-plated	BAPGR09/20	329.67.050
2	nickel-plated	BAPGR29/20	329.67.057
6	nickel-plated	BAPGR69/20	329.67.134
0	titanium	BAPGR06/20	329.67.132
2	titanium	BAPGR26/20	329.67.133
6	titanium	BAPGR66/20	329.67.135

Lapis hinges pages 9.33

Dimensional data not binding. Dimensions in mm, inches are approximate. We reserve the right to alter specifications without notice.

Salice

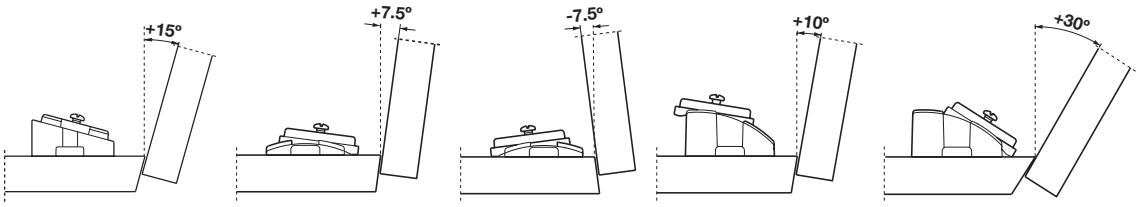

An almost infinite variety of angled door applications is possible when used in conjunction with Salice hinges on pages **9.17-9.30 and 9.34.**

→ Slide-on Mounting Plate

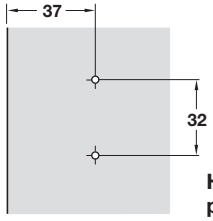

Hole pattern

> Screw mounted
> Pre-installed hinge-arm retaining screws
> Independent vertical adjustment
> Material: Zinc die-cast; Finish: nickel-plated

Height	Model	Item No.
0	B2R3E09/15	329.80.626
3	B2R3E39/15	329.80.653
9	B2R3E99/15	329.80.680

→ Slide-on Mounting Plate

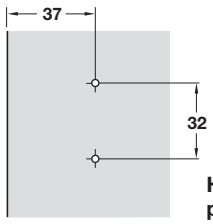

Hole pattern

> Screw mounted
> Pre-installed hinge-arm retaining screws
> Vertical adjustment oblong holes
> Material: Zinc die-cast; Finish: nickel-plated

Type	Model	Item No.
15°	B2V3BW9/15	329.84.100

→ Slide-on Mounting Plate

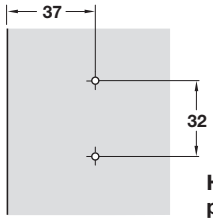

Hole pattern

→ Slide-on Mounting Plate

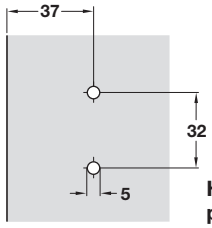

Hole pattern

> Pre-installed euro screws in system holes
> Pre-installed hinge-arm retaining screws
> 11 mm (7/16") length for single-side mounting
> Independent vertical adjustment
> Material: Zinc die-cast; Finish: nickel-plated

Height	Model	Item No.
0	B2RGE09/17	329.81.721
3	B2RGE39/17	329.81.758
9	B2RGE99/17	329.81.785

→ Slide-on Mounting Plate

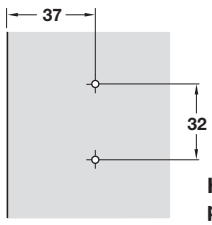

Hole pattern

> Screw mounted
> Pre-installed hinge-arm retaining screws
> Vertical adjustment oblong holes
> Material: Zinc die-cast; Finish: nickel-plated

Type	Model	Item No.
+/- 7.5°	B2V3BW9R/15	329.84.110

> Screw mounted
> Pre-installed hinge-arm retaining screws
> Vertical adjustment oblong holes
> Material: Zinc die-cast; Finish: nickel-plated

Type	Model	Item No.
+10/+ 30°	B2V3BW9S/15	329.84.120

Flat head wood screws page 12.13

Dimensional data not binding. Dimensions in mm, inches are approximate. We reserve the right to alter specifications without notice.

Salice

> For frameless cabinets
> Can not be used with Logica or Rapido hinges

→ Smoveholder with integrated SMOVE

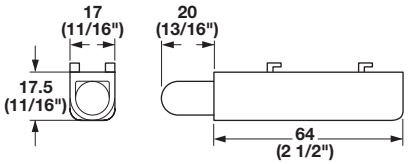

> Soft tip prevents door marring
> Adjustable piston and adapter thicknesses accommodate various door sizes and overlays
> Use with most euro-style mounting plates with wings: installation requires 5 mm (3/16") or #8 x 5/8" screws
> Quick and simple installation and adjustment
> Adjust by rotating screw +/firm -/soft
> Material: Zinc die-cast; Piston: Plastic

Color	For doors	Model	Item No.
black	with 2 - 3 hinges	D0SHSNG	329.45.330
orange	with 3+ hinges	D0S8SNG	329.45.501

→ Mounting Plate Adapter for Smoveholder

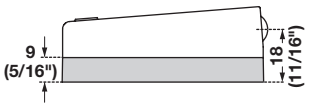

> For full overlay hinges
> Material: Zinc die-cast

For mounting plate	Model	Item No.
BAV steel	D2VX09	329.45.910
BAR die-cast	DARX09	329.45.911

→ Mounting Plate Adapter for Smoveholder

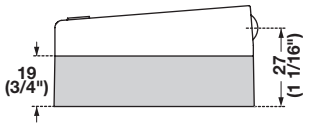

> For half overlay hinges
> With steel mounting plate for wood screw mounting
> Material: Zinc die-cast

For mounting plate	Model	Item No.
BAV Steel	D2VX99	329.45.914

→ Super SMOVE

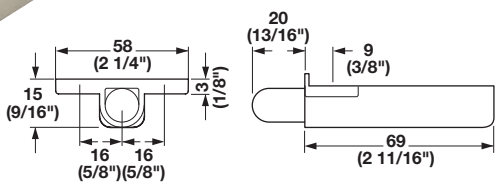

Flat Head #8

> For use on frameless or face frame applications
> Unhanded
> Material: Zinc/Plastic; Color: beige

For Doors	Model	Item No.
with 2 - 3 hinges	DOLHSNG	329.45.510
with 3+ hinges	DOL8SNG	329.45.511

Note
Use on heavy doors such as pantry doors.

Loosen one screw on the mounting plate

Insert the adapter for the Smoveholder

Re-tighten the screw for the mounting plate

Apply the Smoveholder to the adapter

Rotate the screw toward the plus sign to decrease closing speed, or to the minus sign to increase closing speed

Flat head screws pages 12.7-12.8, 12.10, 12.13

Dimensional data not binding. Dimensions in mm, inches are approximate. We reserve the right to alter specifications without notice.

Salice

For recess mounting

For surface mounting

> Quiet door/drawer closure
> As the door/drawer opens, pressure is then released allowing the adapter to move forward to receive the door/drawer again
> Use with hinges on pages **9.17-9.27, 9.30**
> For doors over 1600 mm (63"), it is suggested to use two SMOVE, one to be inserted into the upper part and the second into the lower part of the cabinet side opposite the hinges

SMOVE Installation instructions for adhesive adapters:

1. Clean and de-grease the cabinet surface where the adapter is to be installed using denatured alcohol or an acetone based cleaner.
2. Remove the protective strip from the adhesive.
3. Place the adapter in position and apply a firm pressure for about one minute.
4. Insert SMOVE into the adapter.
5. Allow a period of 12 hours to elapse before using.

→ SMOVE

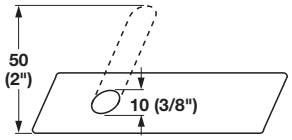

> Light resistance
> With pre-attached grommet
> Mount into the cabinet side opposite the hinges
> For optimal performance, we suggest mounting in the center of the side panel
> For doors from 450–600 mm (17 23/32"–23 5/8")
> Material: Plastic

Color	Model	Item No.
beige	D005SNB	356.11.400
light brown	D005SNQ	356.11.100

→ SMOVE

> Heavy resistance
> With pre-attached grommet
> Mount into the top or the base panel of the cabinet on the hinged side
> A drilling distance of 27 mm (1 1/16") from the cabinet side is suggested
> Material: Plastic

Color	Model	Item No.
beige	D008SNB	356.11.420

→ SMOVE

> Medium resistance
> With pre-attached grommet
> Mount approximately into the center of the top or the base panel of the cabinet
> Material: Plastic

Color	Model	Item No.
beige	D006SNB	356.11.410

→ Twist Drill Bit HSS

> 10 mm (3/8")
> Material: Steel

	Item No.
	001.41.293

Supplied With
10 pcs.

→ Adapter for overlay or inset doors without lip

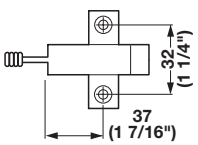

> Screw mounted
> Material: Plastic

Color	Model	Item No.
beige	D064SNBR	356.11.462

Dimensional data not binding. Dimensions in mm, inches are approximate. We reserve the right to alter specifications without notice.

Salice Accessories

→ Depth Gauge

> Used to verify the correct drilling depth for the Silentia series
> Ø: 35 mm (1 3/8")
> Material: Plastic; Color: white

Drilling depth	Model	Item No.
12	D1A6AC3SN	329.24.995
13.5	D7A6ACYSN	329.24.996
15.5	D2ABACGSN	329.24.997

→ Reduction Clip

> Material: Steel

Model	Use with hinge	Limits to	Item No.
S2A637XF	94°	86°	329.24.500

> Material: Plastic

Color	Model	Use with hinge	Limits to	Item No.
white	S2BF37XY	155°	130°	329.24.510
black	S2AF37X3	155°	135°	329.24.520
light gray	S2BM37XG	155°	92°	329.24.530
dark gray	S2AM37XG	155°	120°	329.24.515
white	S1E637XY	105°	86°	329.24.501

→ Euro Screw for Plates

> 14.5 x 5 mm (9/16" x 3/16")
> Material: Steel

Finish	Model	Item No.
titanium	V136X156	013.19.731

→ Flange Cover Caps

> Material: Steel

Finish	Model	Item No.
nickel-plated	S2XX85H9	329.32.530
titanium	S2XX85H6	329.32.539

→ Cover Caps

> Material: Steel

Finish	Model	Item No.
nickel-plated	S2BX83H9	329.32.500
titanium	S2BX83H6	329.32.509

→ Replacement Dowels for Hinges

> Material: Plastic

Model	Item No.
S2R660XY	329.00.093

→ Replacement Screws for Dowels

> Material: Steel

Model	Item No.
V284X114	329.00.084

→ Spacers

> Place under the Silentia cup flange to shim up
> Material: Plastic, transparent

Drilling depth	Model	Item No.
1.2	S2XX86AT	329.18.452
1.8	S2XX86KT	329.18.453

Dimensional data not binding. Dimensions in mm, inches are approximate. We reserve the right to alter specifications without notice.

Salice Hinge Machines

→ Salice Omal - Insert C

> Suitable for multiple drilling solutions including:
- Hinge insertion
- Line drilling (base plates, shelf supports)
- Horizontal drilling (in line plates, K.D. fittings)

Description	Item No.
110V	001.89.003
220V single phase	001.89.004
220V three phase	001.89.005

Supplied With
1.5 HP motor
5 Spindles gearbox (boring pattern 45 x 9.5 mm)
Center fence
Table (700 x 400 mm)
Right and left hand extension rulers (700 mm (2' 4") each)
4 Tilt stops (to index panels on the fence)
Pneumatic (6 bar, 85 psi) hold down clamps
Universal insertion RAM
Set of drill bits (1 - 35 mm RH bit and 2 - 8 mm LH bits)
Tool kit
Operators manual

→ Accessories for Insert C Machine, optional

Description	Item No.
7 spindle line boring gearbox	001.89.310
Exhaust device	001.89.030

Note
Only available for 001.89.003, 001.89.004 and 001.89.005.

→ Omal Hinge Boring/Insertion Machine

> Suitable for multiple drilling solutions including:
- Hinge insertion
- Line drilling (base plates, shelf supports)
- Horizontal drilling (in line plates, K.D. fittings)

Description	Item No.
Omal manual machine	001.89.006
Omal “Easy” machine 110V	001.89.007

Supplied With
1.5 HP motor
3 Spindles gearbox (boring pattern 45 x 9.5 mm)
Center fence
Table (700 mm x 400 mm)
2 Tilt stops (to index panels on the fence)
Universal RAM
Set of drill bits - 1- 35 mm RH bit and 2 - 8 mm LH bits
Tool kit
Operators manual

→ Accessories, optional

Description	Item No.
Tilt stop left	001.89.111
Tilt stop right	001.89.112
Silenta insertion RAM	001.88.600
Extension ruler RH	001.89.130
Extension ruler LH	001.89.131
Extension ruler extra long RH 1200	001.89.132
Extension ruler extra long LH 1200	001.89.133
Drill bit carbide 8 x 57 LH	001.06.870
Carbide RH Ø35 x 57 (1 3/8" x 2 1/4")	001.08.013
Drill bit kit for hinge machines carbide 2 - 8 mm LH & 1 - 35 mm RH	001.06.871

Dimensional data not binding. Dimensions in mm, inches are approximate. We reserve the right to alter specifications without notice.

Grass TIOMOS

Features

> A hinge system for all door applications
> With 3 soft close settings, invisibly integrated in hinge arm
> Improved kinematics reduces opening force and minimizes reveals
> Full overlay application achieved with 2 version hinges
> 3 dimensional adjustment
> Side adjustment: ± 2 mm (1/16") with overturn stop
> Depth adjustment: from -2/+3 mm (-1/16"/+1/8") via self-locking worm gear
> Height adjustment: ± 2.5 mm depending on the mounting plate
> Meets and exceeds ANSI/BHMA 156.9 Standard

Adjustment facility of soft close

For large and heavy doors
The damping effect is increased by turning the adjustment lever to the right by 90°

For standard doors
Adjustment lever in the horizontal position - factory setting

For small and lightweight doors
A softer damping effect is achieved by turning the adjustmnent lever to the left by 90°

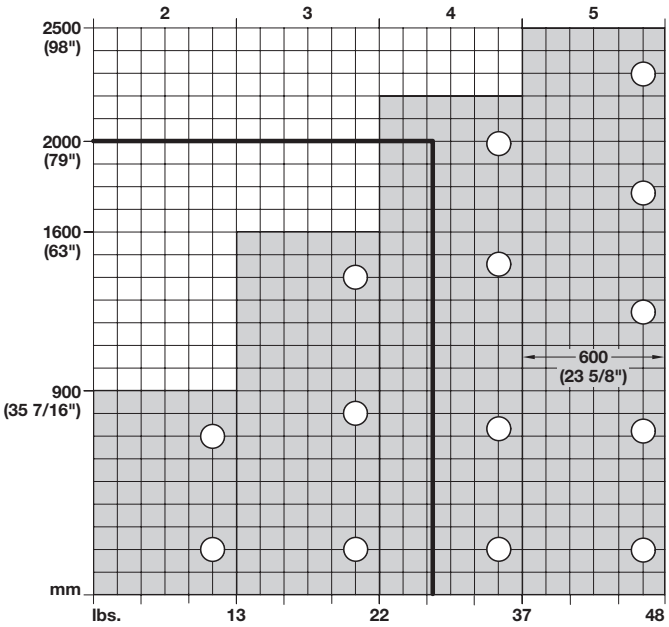

Number of concealed hinges per door

> The number of concealed hinges per door depends on: Door width, height, weight and material
> The values in the diagram are sample measurements and refer to a standard door width of 600 mm (23 5/8").
> If in doubt, determine the number of hinges by trial mounting.
> According to the example diagram, four concealed hinges should be mounted with a door height of 2 m (6' 6 3/4") x 600 mm (23 5/8") and a door weight of 13 kg (29 lbs.).

Dimensional data not binding. Dimensions in mm, inches are approximate. We reserve the right to alter specifications without notice.

Grass TIOMOS

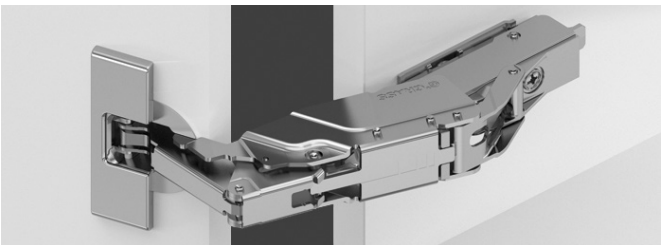

> The reveal (R) is the distance required between the door and the side wall or between 2 doors to allow sufficient space for opening the door. The required reveal (R) depends on the door thickness.

Full overlay plus/full overlay mounting

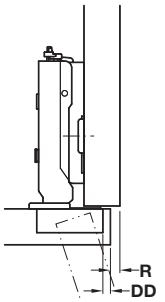

Half overlay/twin mounting

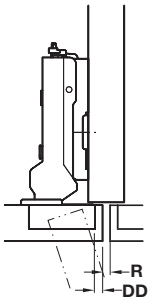

Inset mounting

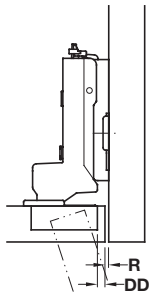

Minimum Reveal

110°

Door thickness	Distance to cup **DD**				
	3	4	5	6	7
16	.6	.6	.6	.6	.6
17	.6	.6	.6	.6	.6
18	.7	.7	.7	.7	.7
19	.9	.9	.9	.9	.9
20	1.1	1.1	1.1	1.1	1.1
21	1.4	1.3	1.3	1.3	1.3
22	1.6	1.6	1.6	1.5	1.5
24	2.4	2.1	2.1	2.1	2
	Minimum reveal **R**				

120°

Door thickness	Distance to cup **DD**				
	3	4	5	6	7
16	.6	.6	.6	.6	.6
17	.6	.6	.6	.6	.6
18	.7	.7	.7	.7	.7
19	.9	.9	.9	.9	.9
20	1.1	1.1	1.1	1.1	1.1
21	1.4	1.3	1.3	1.3	1.3
22	3	2	1.5	1.5	1.5
24	6.4	5.4	4.4	3.4	2.4
	Minimum reveal **R**				

30°/45° angle hinge

Door thickness	Distance to cup **DD**				
	3	4	5	6	7
16	.6	.6	.6	.6	.6
17	.6	.6	.6	.6	.6
18	.7	.7	.7	.7	.7
19	.9	.9	.9	.9	.9
20	1.1	1.1	1.1	1.1	1.1
21	1.4	1.3	1.3	1.3	1.3
22	1.6	1.6	1.6	1.5	1.5
24	2.4	2.1	2.1	2.1	2
	Minimum reveal **R**				

Note
Minimum gap for doors with radius edges (r = 1 mm) with factory setting.

160°

Door thickness	Distance to cup **DD**						
	3	4	5	6	7	8	9
29	.2	.2	.2	.2	.2	.2*	.2*
30	.2	.2	.2*	.2*	.2*		
31	.2*	.2*	.2*	.2*			
32	.2*	.2*					
	Minimum reveal **R**						

Note
Minimum reveal R: No minimum gap is required for door thickness 16–28 mm. We recommend trial mounting from a door thickness of 29 mm (1 1/8") and above. 29–32 mm (1 1/8"–1 1/4") *require reduction clip.

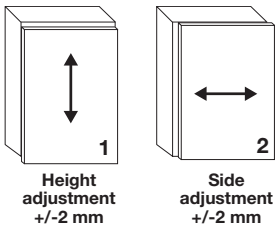

Height adjustment +/-2 mm

Side adjustment +/-2 mm

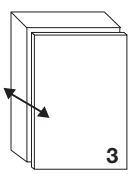

Depth adjustment +3/-2 mm

All adjustments can be carried out independently of each other

Side adjustment

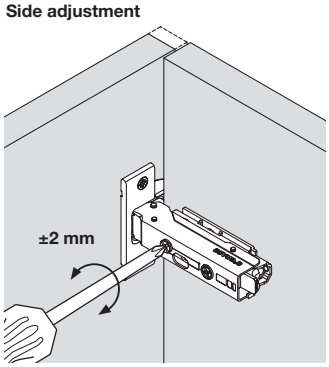

Depth adjustment via worm gear

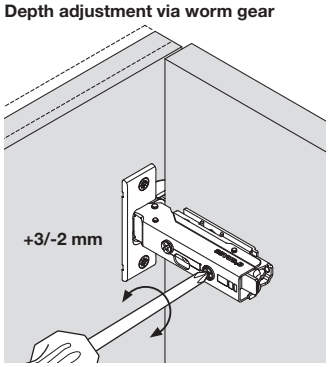

Height adjustment via base plate

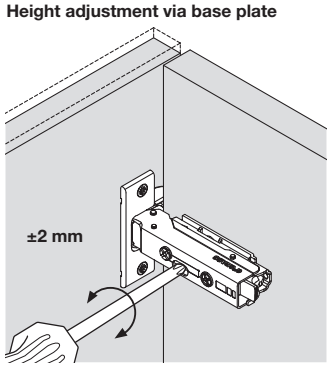

Dimensional data not binding. Dimensions in mm, inches are approximate. We reserve the right to alter specifications without notice.

Grass TIOMOS

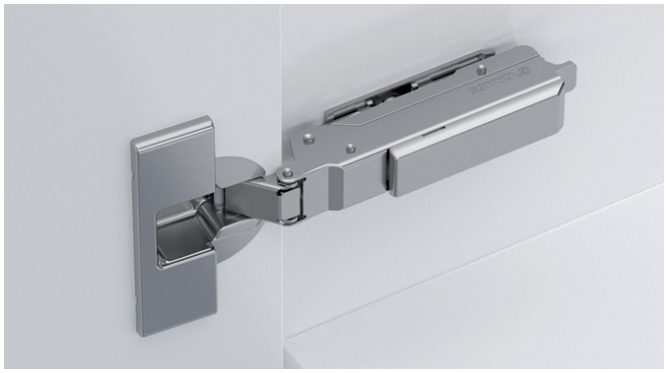

> For thick doors
> Soft close or self-close
> Full overlay plus accommodates overlays up to 22 mm (7/8")
> Optimal reveal up to 36 mm (1 7/16") door thickness
> Screw, dowel or Impresso mounted
> Material: Steel; Finish: nickel-plated

Note
Dimensions in drawings and tables are calculated using factory settings and for mounting plate height 2 mm (3/32").

Opening angle: 94°

→ Full Overlay Plus

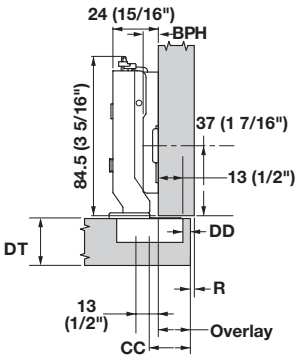

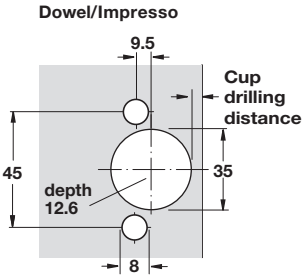

Version	Hinge arm	Screw	Dowel	Impresso
Soft close		348.34.800	348.34.810	348.34.730
Self-close		348.34.600	348.34.610	-

Door overlay	15	16	17	18	19	20	21	22*
0 baseplate				3	4	5	6	7
2 baseplate		3	4	5	6	7		

DD - cup drilling distance

Note
Door overlay over 24 mm (15/16") possible, with side adjustment by ±2 mm (±1/16").

→ Overlay

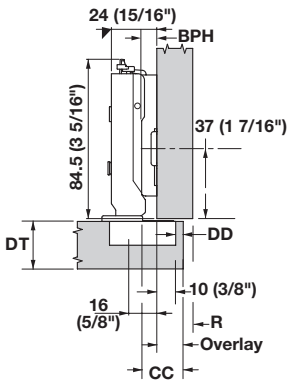

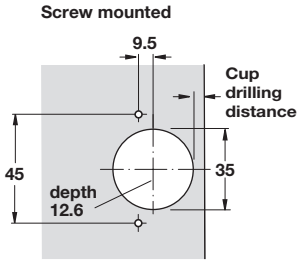

Version	Hinge arm	Screw	Dowel	Impresso
Soft close		348.34.801	348.34.811	348.34.731
Self-close		348.34.601	348.34.611	-

Door overlay	12	13	14	15	16	17	18	19
0 baseplate				3	4	5	6	7
2 baseplate		3	4	5	6	7		

DD - cup drilling distance

Mounting plates and Cover caps pages 9.60-9.62

Dimensional data not binding. Dimensions in mm, inches are approximate. We reserve the right to alter specifications without notice.

Grass TIOMOS

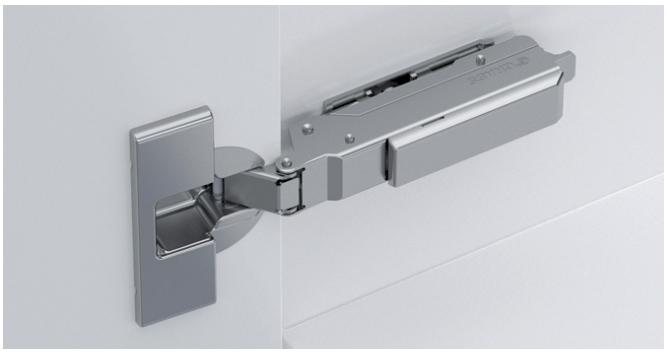

> For thick doors
> Soft close or self-close
> Accommodates overlays up to 22 mm (7/8")
> Optimal reveal up to 36 mm (1 7/16") door thickness
> Screw, dowel or Impresso mounted
> Material: Steel; Finish: nickel-plated

Note
Dimensions in drawings and tables are calculated using factory settings and for mounting plate height 2 mm (3/32").

Opening angle: 94°

→ Half Overlay

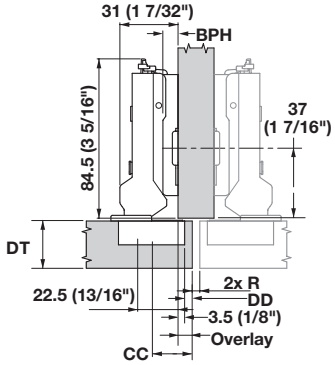

Version	Hinge arm	Screw	Dowel	Impresso
Soft close		348.34.802	348.34.812	348.34.732
Self-close		348.34.602	348.34.612	-

Door overlay	5.5	6.5	7.5	8.5	9.5	10.5	11.5	12.5
0 baseplate				3	4	5	6	7
2 baseplate		3	4	5	6	7		

DD - cup drilling distance

→ Inset

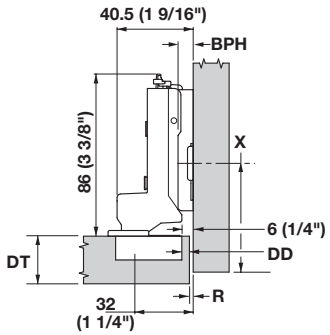

Version	Hinge arm	Screw	Dowel	Impresso
Soft close		348.34.803	348.34.813	348.34.733
Self-close		348.34.603	348.34.613	-

Door overlay	-4	-3	-2	-1	0
0 baseplate				3	4
2 baseplate		3	4	5	6

DD - cup drilling distance

Mounting plates and Cover caps pages 9.60-9.62

Dimensional data not binding. Dimensions in mm, inches are approximate. We reserve the right to alter specifications without notice.

Grass TIOMOS

> Soft close or self-close
> A hinge system for all door applications
> 3 soft close settings, invisibly integrated in hinge arm
> Screw, dowel or Impresso mounted
> Side adjustment ± 2 mm (1/16")
> Depth adjustment from -2/+ 3 mm (-1/6" + 1/8")
> Height adjustment ± 2.5 mm (1/8") depending on the mounting plate
> Material: Steel; Finish: nickel-plated

Note
Dimensions in drawings and tables are calculated using factory settings and for mounting plate height 2 mm (1/16").

soft&silent

Opening angle: 110°

→ Full Overlay Plus

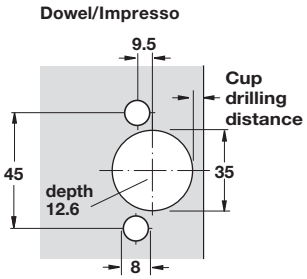

> For large door overlay up to 24 mm (15/16")

Version	Hinge arm	Screw	Dowel	Impresso
Soft close		348.31.800	348.31.810	348.31.730
Self-close		348.31.600	348.31.610	348.31.530

Door overlay	15	16	17	18	19	20	21	22*
0 baseplate				3	4	5	6	7
2 baseplate		3	4	5	6	7		

DD - cup drilling distance

Note
Door overlay over 24 mm (15/16") possible, with side adjustment by ±2 mm.

→ Half Overlay/Twin

Version	Hinge arm	Screw	Dowel	Impresso
Soft close		348.31.802	348.31.812	348.31.732
Self-close		348.31.602	348.31.612	348.31.532

Door overlay	5.5	6.5	7.5	8.5	9.5	10.5	11.5	12.5
0 baseplate				3	4	5	6	7
2 baseplate		3	4	5	6	7		

DD - cup drilling distance

→ Overlay

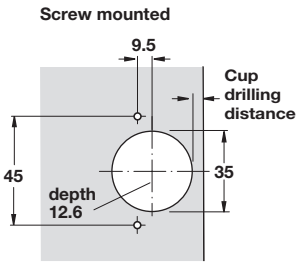

Version	Hinge arm	Screw	Dowel	Impresso
Soft close		348.31.801	348.31.811	348.31.731
Self-close		348.31.601	348.31.611	348.31.531

Door overlay	12	13	14	15	16	17	18	19
0 baseplate				3	4	5	6	7
2 baseplate		3	4	5	6	7		

DD - cup drilling distance

→ Inset

Version	Hinge arm	Screw	Dowel	Impresso
Soft close		348.31.803	348.31.813	348.31.733
Self-close		348.31.603	348.31.613	348.31.533

Door overlay	-4	-3	-2	-1	0
0 baseplate				3	4
2 baseplate		3	4	5	6

DD - cup drilling distance

Mounting plates and Cover caps pages 9.60-9.62

Dimensional data not binding. Dimensions in mm, inches are approximate. We reserve the right to alter specifications without notice.

Grass TIOMOS

> Soft close or self-close
> 3 soft close settings, invisibly integrated in hinge arm
> Screw, dowel or Impresso mounted
> The only 120° hinge with integrated soft close
> Material: Steel; Finish: nickel-plated

Note
Dimensions in drawings and tables are calculated using factory settings and for mounting plate height 2 mm (3/32").

soft&silent

Opening angle: 120°

→ Overlay

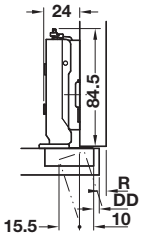

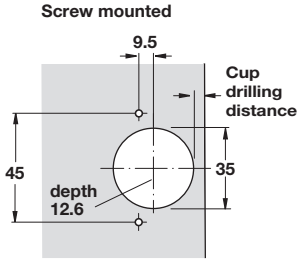

Version	Hinge arm	Screw	Dowel	Impresso
Soft close		-	348.36.811	348.36.731
Self-close		348.36.601	348.36.611	348.36.531

Door overlay	12	13	14	15	16	17	18	19
0 baseplate				3	4	5	6	7
2 baseplate		3	4	5	6	7		

DD - cup drilling distance

→ Half Overlay/Twin

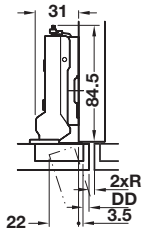

Version	Hinge arm	Screw	Dowel	Impresso
Soft close		-	-	348.36.732
Self-close		-	348.36.812	-

Door overlay	5.5	6.5	7.5	8.5	9.5	10.5	11.5	12.5
0 baseplate				3	4	5	6	7
2 baseplate		3	4	5	6	7		

DD - cup drilling distance

Mounting plates and Cover caps pages 9.60-9.62

Dimensional data not binding. Dimensions in mm, inches are approximate. We reserve the right to alter specifications without notice.

Grass TIOMOS

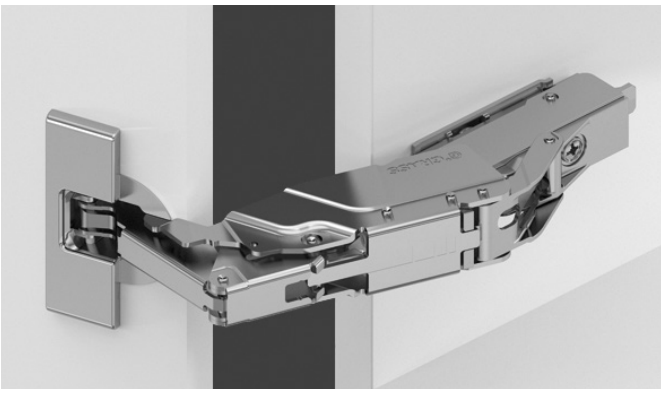

> Soft close or self-close
> Screw, dowel or Impresso mounted
> Door thickness up to 32 mm (1 1/4")
> Shallow cup drilling depth: 10 mm (3/8")
> Accommodates overlays up to 25.4 mm (1")
> Material: Steel; Finish: nickel-plated

Note
Dimensions in drawings and tables are calculated using factory settings and for mounting plate height 2 mm (1/16").

soft&silent

Opening angle: 160°

→ Full Overlay Plus

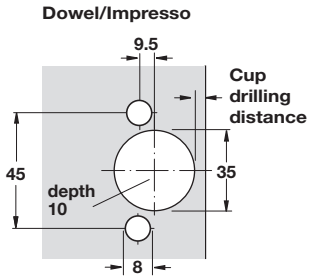

> For large door overlay up to 24 mm (15/16")
> For door thickness up to 32 mm (1 1/4") (for door thicknesses over 29 mm (1 1/8"), a trial fitting is recommended)

Version	Hinge arm	Screw	Dowel	Impresso
Soft-close		348.32.800	348.32.810	348.32.730
Self-close		348.32.600	348.32.610	348.32.530

Door overlay	15	16	17	18	19	20	21	22	23	24	25
0 baseplate				3	4	5	6	7	8	9	10
2 baseplate		3	4	5	6	7	8	9	10		

DD - cup drilling distance

→ Overlay/Inset

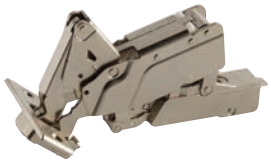

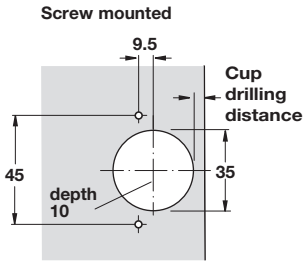

Version	Hinge arm	Screw	Dowel	Impresso
Soft-close		348.32.801	348.32.811	348.32.731
Self-close		348.32.601	348.32.611	348.32.531

Door overlay	12	13	14	15	16	17	18	19	20	21	22
0 baseplate				3	4	5	6	7	8	9	10
2 baseplate		3	4	5	6	7	8	9	10		

DD - cup drilling distance

Note
For inset mounting use 19 mm (3/4") mounting plate. Set mounting plate back by door thickness + 1.5 mm.

→ Half Overlay

Version	Hinge arm	Screw	Dowel	Impresso
Soft-close		348.32.802	348.32.812	348.32.732
Self-close		348.32.602	348.32.612	348.32.532

Door overlay	5.5	6.5	7.5	8.5	9.5	10.5	11.5	12.5	13.5	14.5	15.5
0 baseplate				3	4	5	6	7	8	9	10
2 baseplate		3	4	5	6	7	8	9	10		

DD - cup drilling distance

Mounting plates and Cover caps pages 9.60-9.62

Dimensional data not binding. Dimensions in mm, inches are approximate. We reserve the right to alter specifications without notice.

Grass TIOMOS

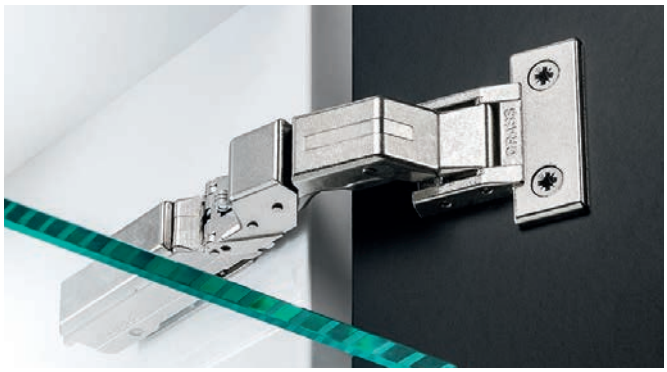

> Mitre and rabbeted doors possible
> Material: Steel

→ TIOMOS M9

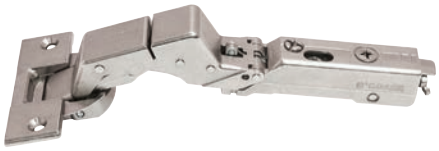

Opening angle: 110°

> Soft close
> Door thickness: 12–28 mm (1/2–1 1/8")
> Shallow cup drilling depth: 9 mm (3/8")
> Accommodates overlays up to 25 mm (1")
> Screw mounted

Finish	Item No.
nickel-plated	348.24.801

→ Opening Angle Reduction Clip to 85°, optional

	Item No.
	348.40.013

→ TIOMOS M0

Opening angle: 125°

> Ideal for thin doors from 6–10 mm (1/4"–13/32") made from HPL, MDF, mineral material and solid surfaces
> Without cup drilling
> No offset with overlay up to 14 mm (9/16")
> With integrated, adjustabe soft closing mechanism with
> 3 settings

Finish	Item No.
nickel-plated	348.23.801

→ Screws for M0

> For use in aluminum, HPL and sollid surfaces
> Door thickness: from 6 mm (1/4")
> Drill Ø: 4.8 mm (3/16"); Cut Ø: 5 mm (3/16") thread M5 x 6, PH2

	Item No.
	348.40.040

Mounting plates and Cover caps pages 9.60-9.62

Dimensional data not binding. Dimensions in mm, inches are approximate. We reserve the right to alter specifications without notice.

Grass TIOMOS

> With full-cup drill hole
> For connecting two folding doors
> For door thickness: 16–24 mm (5/8"–5/16")
> Only available in self-close
> 3-dimensional adjustment with appropriate mounting plate
> Use along with Tiomos 160° wide angle hinge
> Material: Zinc Alloy; Finish: nickel-plated

Note
Dimensions in drawings and tables are calculated using factory settings and for mounting plate distance 0 mm.

→ PCC Pie-Cut Corner Hinge

Flat Head #7

Mounting	Item No.
Screw	348.29.600
Dowel	348.29.650

Dowel/Impresso

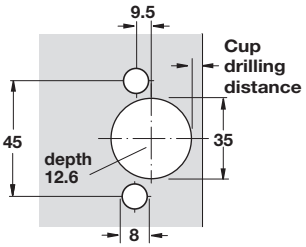

Screw mounted

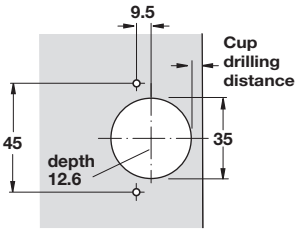

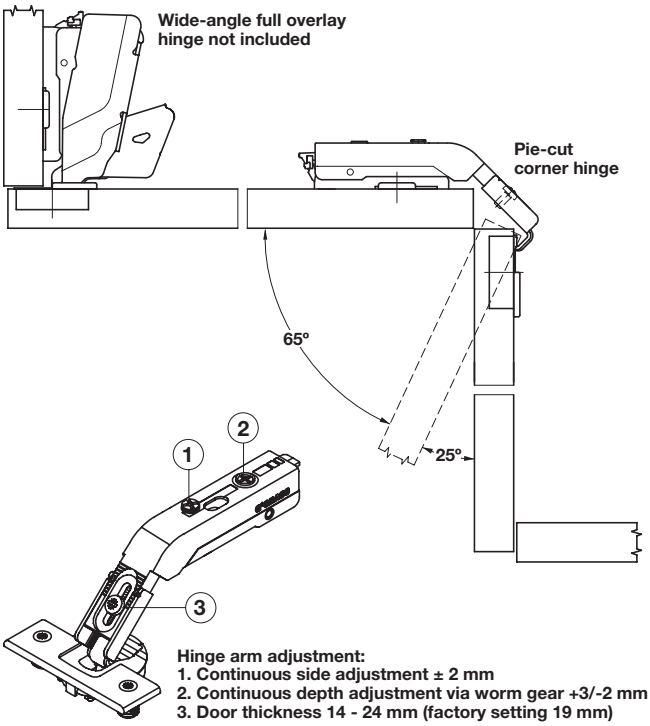

Hinge arm adjustment:
1. Continuous side adjustment ± 2 mm
2. Continuous depth adjustment via worm gear +3/-2 mm
3. Door thickness 14 - 24 mm (factory setting 19 mm)

E = Distance to cup

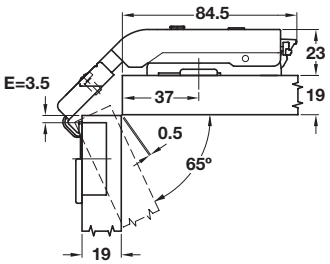

19 mm door thickness
Mounting plate height 0 mm

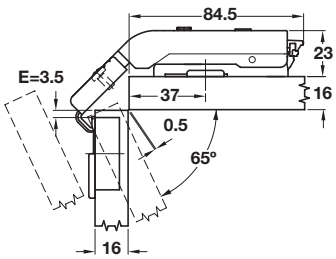

16 mm door thickness
Mounting plate height 0 mm

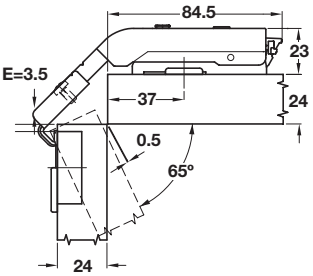

24 mm door thickness
Mounting plate height 0 mm

Mounting plates and cover caps	pages 9.60-9.62
Flat head screws	pages 12.7-12.8, 12.10, 12.13

Dimensional data not binding. Dimensions in mm, inches are approximate. We reserve the right to alter specifications without notice.

Grass TIOMOS

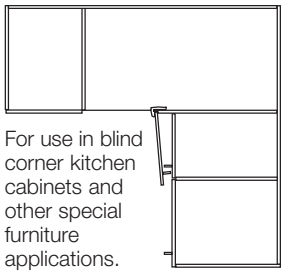

For use in blind corner kitchen cabinets and other special furniture applications.

> Soft close or self-close
> Screw, dowel or Impresso mounted
> For blind corner applications
> For door thickness up to 24 mm (15/16")
> Material: Steel; Hinge arm: Zinc Alloy; Finish: nickel-plated

Note
Dimensions in drawings and tables are calculated using factory settings and for mounting plate height 3 mm (1/8"). For door thickness over 24 mm (15/16"), a trial mounting is recommended.

soft&silent

Opening angle: 110°

→ Blind Corner Hinge, Inset

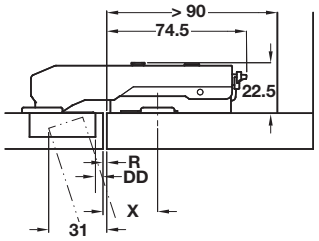

Dowel/Impresso

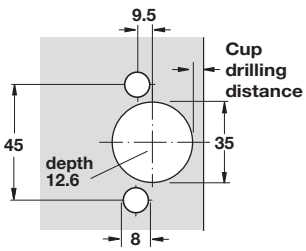

Screw mounted

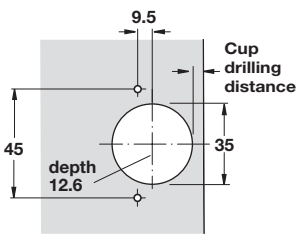

Version		Screw	Dowel	Impresso
Soft close	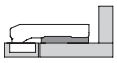	348.37.800	348.37.810	348.37.730
Self-close		348.37.600	348.37.610	348.37.530

Table for cross plate

Dim **X**	Drilling distance **DD**			
	4	5	6	7
28	1	0		
27	2	1	0	
26	3	2	1	0

Door reveal **R**

Table for inline plate

Dim **X**	Drilling distance **DD**			
	4	5	6	7
11	1	0		
10	2	1	0	
9	3	2	1	0

Door reveal **R**

Cross plate

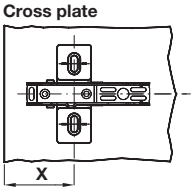

Inline plate

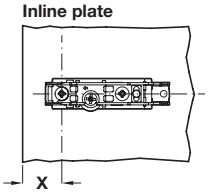

→ Blind Corner Hinge, Overlay

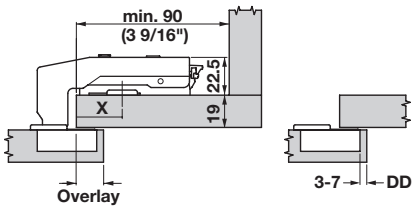

Shows a 3 mm height plate

Version		Screw	Dowel	Impresso
Soft close	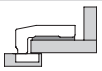	348.37.820	348.37.830	348.43.830
Self-close		-	348.37.630	-

Dim **X**	Drilling distance **DD**				
	3	4	5	6	7
30	18	19	20	21	22
29	17	18	19	20	21
28	16	17	18	19	20
27	15	16	17	18	19
28	14	15	16	17	18

Door overlay

Dim **X**	Drilling distance **DD**				
	3	4	5	6	7
13	18	19	20	21	22
12	17	18	19	20	21
11	16	17	18	19	20
10	15	16	17	18	19
9	14	15	16	17	18

Door overlay

Mounting plates and cover caps	pages 9.60-9.62
Flat head screws	pages 12.7-12.8, 12.10, 12.13

Dimensional data not binding. Dimensions in mm, inches are approximate. We reserve the right to alter specifications without notice.

Grass TIOMOS

> For corner applications
> For door thickness up to 24 mm (15/16")
> Material: Steel; Hinge Arm: Zinc Alloy; Finish: nickel-plated

Note
for door thickness over 22 mm (7/8") and above, a trial mounting is recommended.

soft&silent

Opening angle: 110°

→ +45° Corner Hinge/Overlay

Dowel/Impresso

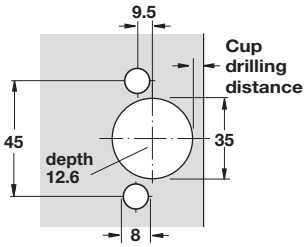

Version	Screw	Dowel	Impresso
Soft close	348.35.805	348.35.815	–
Self-close	348.35.605	348.35.615	348.35.535

Table for Cross Plate

Dim **X**	Baseplate height
30.5	0
28.5	2
27.5	3

Table for Inline Plate

Dim **X**	Baseplate height
13.5	0
11.5	2
10.5	3

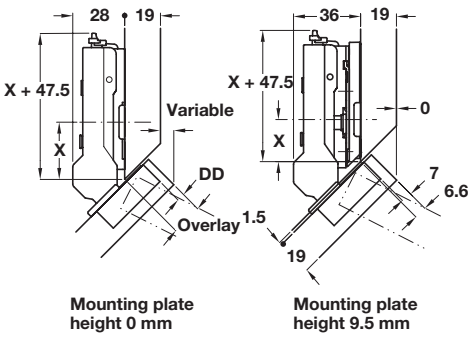

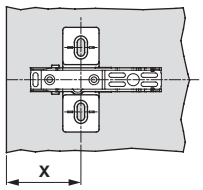

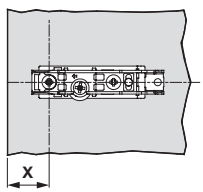

→ +45° Corner Hinge/Inset

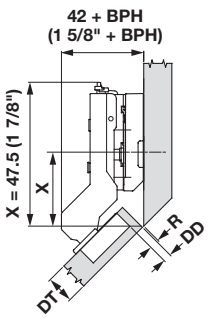

Version	Dowel	Impresso
Soft close	348.35.816	348.35.817
Self-close	-	348.35.530

Mounting plates and cover caps	pages 9.60-9.62
Flat head screws	pages 12.7-12.8, 12.10, 12.13

Dimensional data not binding. Dimensions in mm, inches are approximate. We reserve the right to alter specifications without notice.

Grass TIOMOS

> Works with Tipmatic Pin System
> Integrated spring in arm assists Tipmatic Pin for handle free door opening
> Screw mounted
> For handle-free doors
> Material: Steel; Finish: nickel-plated

Opening angle: 110°

→ Tipmatic Plus

> Full overlay

	Item No.
	348.31.101

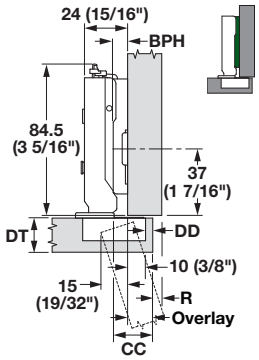

Full Overlay

	Drilling distance				
	3	4	5	6	7
19					0
18				0	
17			0		2
16.5					
16		0		2	3
15.5					3.5
15	0		2	3	
14.5				3.5	
14		2	3		
13.5			3.5		
13	2	3			
12.5		3.5			
12	3				
11.5	3.5	Base plate height			

Note
Drawing shows Tiomos with a 2 mm base plate.

Drilling Pattern

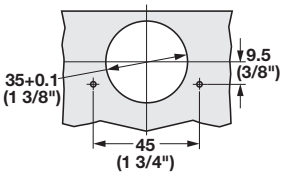

Cup Dimensions

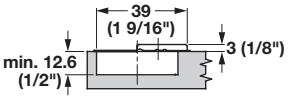

→ Tipmatic Plus

> Half overlay

	Item No.
	348.31.102

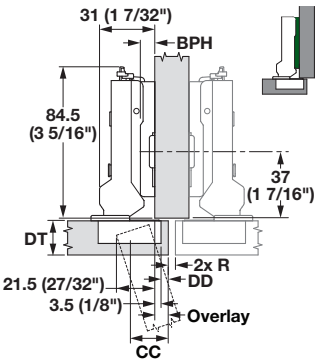

Half Overlay

	Drilling distance				
	3	4	5	6	7
12.5					0
11.5				0	
10.5			0		2
10					
9.5		0		2	3
9					3.5
8.5	0		2	3	
8				3.5	
7.5		2	3		
7			3.5		
6.5	2	3			
6		3.5			
5.5	3				
5	3.5	Base plate height			

Note
Drawing shows Tiomos with a 2 mm base plate.

Pin and adapter plates	page 9.59
Flat head screws	pages 12.7-12.8, 12.10, 12.13

Dimensional data not binding. Dimensions in mm, inches are approximate. We reserve the right to alter specifications without notice.

Grass TIOMOS

> Gently tapping the front allows the door to open at a convenient angle
> Large magnet catch range holds door closed securely
> Gap adjustment from 2.5–5.5 mm (1/8"–3/16") with integrated, self-locking and tool-free depth adjustment feature
> Mount on the front side of the cabinet or with an adapter plate
> Use with Tiomos Tipmatic Plus or free-swinging hinges
> Material: Plastic; Color: platinum gray, RAL 7035

→ Tipmatic Pin

> Hole drilled from the front

Item No.
553.00.020

Supplied With
Stick on and Screw on strike plates

→ Adapter Plate, for line boring

> Suitable for line boring 28 and 37 mm (1 1/8" and 1 7/16")
> Attach with euro screws (6.3 x 13.5)

Item No.
356.13.510

→ Face Frame or Standard Adapter Plate

> Quick upgrade installation
> Attach with wood screws (3.5 x 13)

Item No.
356.13.520

→ Liner Adapter Plate

> Design solution, also suitable for inset doors
> Attach with wood screws (3.5 x 13)

Item No.
356.13.530

→ Wood Screw

> #6 x 5/8"
> Material: Steel

Finish	Item No.
nickel-plated	015.55.648

Dimensional data not binding. Dimensions in mm, inches are approximate. We reserve the right to alter specifications without notice.

Grass TIOMOS

→ Wing Baseplate

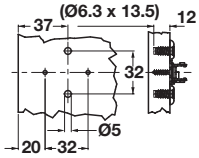

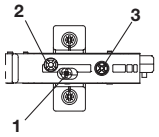

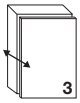

Depth adjustment
+3/-2 mm

All adjustment options can be made independently of one another

> 4 point fixing
> Height adjustment via worm gear
> Material: Steel; Finish: nickel-plated

Height	Wood screw	Pre-mounted Euro
0	348.38.511	348.38.521
2	348.38.512	348.38.522
3	348.38.513	348.38.523
3.5	348.38.514	348.38.524

→ Wing Baseplate

dowels

euro screw

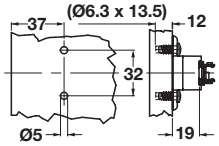

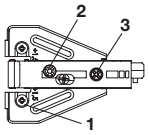

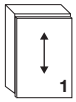

Height adjustment
worm gear ±2 mm
elongated holes ±2.5 mm

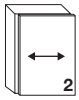

Side adjustment
±2 mm

> 2 point fixing
> Pre-mounted 13.5 mm (9/16") euro screws or 5 mm (3/16") dowels
> Height adjustment via worm gear
> Material: Steel/Zinc; Finish: nickel-plated

Height	Euro screw	5 mm Dowels
0	-	348.38.680
2	-	348.38.682
3	-	348.38.683
6	348.39.501	-
9.5	348.39.505	-
12	348.39.504	-
15	348.39.507	-
19	348.39.508	-
21	348.39.509	-

→ Wing Baseplate

For flat head screws

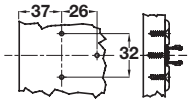

For pre-mounted Euro screws (Ø6.3 X 13.5)

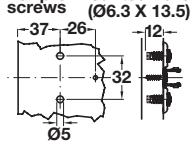

> 3 point fixing
> Height adjustment via elongated holes
> Material: Steel; Finish: nickel-plated

Height	Wood screw	Pre-mounted Euro
0	348.38.612	348.38.551
2	348.38.613	348.38.552
3	348.38.583	348.38.553

Flat head screws pages 12.7-12.8, 12.10, 12.13

Dimensional data not binding. Dimensions in mm, inches are approximate. We reserve the right to alter specifications without notice.

Grass TIOMOS

→ Face Frame Adapter Baseplate

worm gear

elongated holes

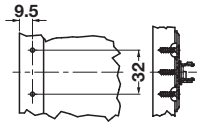

> 2 point fixing
> Height adjustment via worm gear or elongated holes
> Material: Steel; Finish: nickel-plated

Height	Worm gear	Elongated holes
1.5	348.38.571	348.38.641
3.5	348.38.573	348.38.643
4.5	348.38.574	-
5	348.38.575	-

→ Face Frame Adapter Baseplate

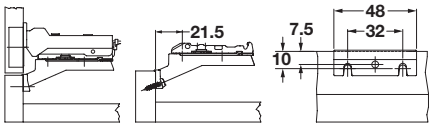

> 3 point fixing
> Height adjustment via worm gear
> Material: Steel; Finish: nickel-plated

Height	Item No.
0	348.38.660

Note
Requires a 9.5 mm crank hinge (half-overlay).

→ Straight Baseplate

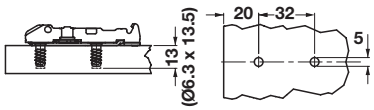

> 2 point fixing
> Pre-mounted euro screws
> Height adjustment via worm gear
> Material: Steel; Finish: nickel-plated

Height	Wood screw	Pre-mounted Euro
0	348.38.501	348.38.630
2	348.38.502	-
3	-	348.38.633

Flat head screws pages 12.7-12.8, 12.10, 12.13

Dimensional data not binding. Dimensions in mm, inches are approximate. We reserve the right to alter specifications without notice.

Grass Accessories

→ Reduction Clips

120°

85°

> Prevents the door from butting against front panels or walls with corner mounting

Opening angle	Material/Color	Item No.
85°	Steel/nickel-plated	348.40.010
120°	Plastic/black	348.40.011

→ Cover Caps

for hinge arm

for hinge cup

> Material: Steel; Finish: nickel-plated

Version	Item No.
For hinge arm (all overlays)	348.40.000
For hinge cup	348.40.001

→ Spacer Wedges

> Material: Zinc; Finish: nickel-plated

Degree	Item No.
+5°	348.40.020
-5°	348.40.021

→ Hinge Clip Protector

> Prevents accidental release of the hinge
> Material: Plastic

Color	Item No.
gray	348.40.015

→ Replacement Dowels

	Item No.
	348.40.081

→ Replacement Screws

> Material: Steel

	Item No.
#6 x 5/8" wood screw	015.55.648

Dimensional data not binding. Dimensions in mm, inches are approximate. We reserve the right to alter specifications without notice.

Grass Hinge Machines

→ Grass Pro I

> Pneumatic drilling/insertion machine

Description	Model	Item No.
220V single phase	94559-01	001.97.077
220V three phase	94560-01	001.97.078
110V	94561-01	001.97.079

Supplied With
3 Spindle drilling head with quick-change chucks
Combined stop and ruler 600 mm (23 5/8") long
Wood supporting table 600 x 400 mm (23 5/8" x 15 3/4")
Insertion die arm to hold the insertion die
Hex keys, open-jaw wrenches, 10, 13 and 17 mm (3/8", 1/2", 11/16")
Side stop left and right
Operating manual

> Drilling and insertion machine for 45 mm (1 3/4") boring pattern
> Bore depth automatically adjusts to material thickness
> Functional design; Easy, fast and efficient operation
> Easy maintenance

→ Drill Bit Kit

Model	Item No.
00213-01	001.97.510

Supplied With
2 8 mm LH bits
1 35 mm RH bit

Accessories, optional

→ Drill Bit

> Material: Carbide

Description	Item No.
8 x 57 LH	001.06.870
8 x 57 RH	001.08.013

→ Short Fence Stop

	Item No.
	001.97.027

→ Extension Fence

> 400–1650 mm (15 3/4"–64 8/32")

	Item No.
	001.97.120

→ Universal Die for Tiomos Hinges

> 110°/120°/160°

Model	Item No.
80039	348.40.161

→ TEC Insertion Die

Model	Item No.
92617	348.91.000

Dimensional data not binding. Dimensions in mm, inches are approximate. We reserve the right to alter specifications without notice.

Clip-on Hinge

Which hinge type? Given the factors:

> What is the desired opening angle?
> Is there a face frame?
> If not, what is the side panel thickness?
> Door thickness, size and weight
> How will the hinge be mounted to the door (screw-mount or press-fit)?
> Mounting plate thickness
> Tab
> Self-close or soft close

Use the following formula to determine overlay:

Hinge type minus mounting plate type plus tab = overlay

Sample Calculations

Hinge type 14
Side panel mounting for overlay doors.

(A) Full Overlay

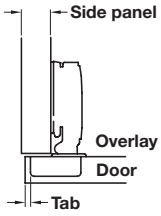

Hinge type 4
Center panel/twin mounting for overlay doors.

(B) Half Overlay

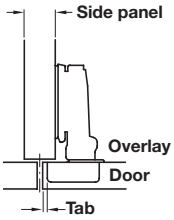

(for twin mounting)

Hinge type -4
Side panel mounting for inset doors.

(C) Inset

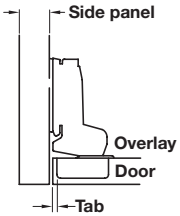

16 mm (5/8") material	Hinge type		Mounting plate		Tab		Total overlay
Full overlay (A)	14	-	0	+	4	=	16
Half overlay (B)	4	-	0	+	4	=	8
Inset (C)	-4	-	2	+	4	=	-2 (2 mm gap)

19 mm (3/4") material	Hinge type		Mounting plate		Tab		Total overlay
Full overlay (A)	14	-	0	+	6	=	18
Half overlay (B)	4	-	0	+	6	=	10
Inset (C)	-4	-	4	+	6	=	-2 (2 mm gap)

If there is no mounting plate with the required height, then the tab or side adjustment must be altered.
The hinge arm can be adjusted to decrease the overlay up to 3 mm or to increase the overlay 1 mm.

How many hinges per door?

There is no hard and fast rule which applies. When determining the number of hinges needed, the main factors to consider are door size and weight. A trial mounting is advisable in case of any doubt, such as with doors supporting mirrors, or unusually wide doors. Avoid disproportionate door width/weight ratios. Use this table for standard, conventional-material doors. When in doubt, always allow for an extra hinge.

> For commercial and heavy-duty applications, see Häfele's Aximat® Hinge
> Use a Pozi drive #2 screwdriver for adjusting all hinges
> Keep hinges as close to top and bottom of door as possible

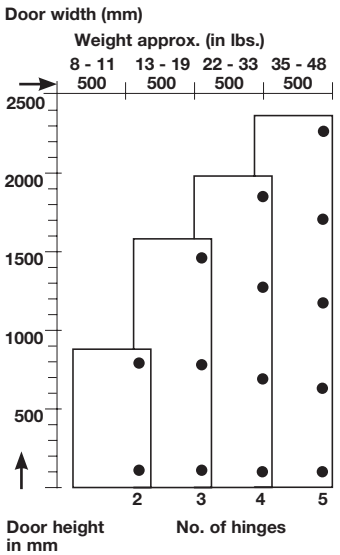

Dimensional data not binding. Dimensions in mm, inches are approximate. We reserve the right to alter specifications without notice.

Clip-on Hinge

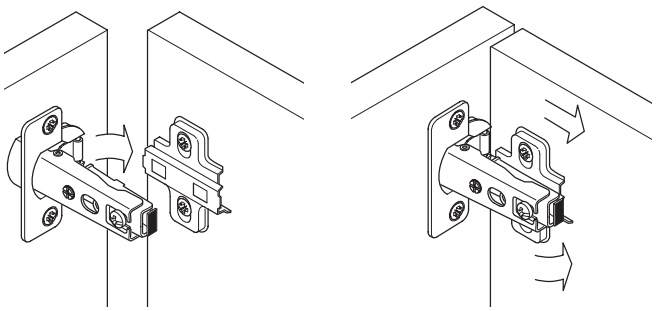

> All-metal
> Durable pivot bearing
> Cup designed for automated insertion
> Self-closing or soft closing with oil damper in arm
> Three-way adjustable

Adjustments

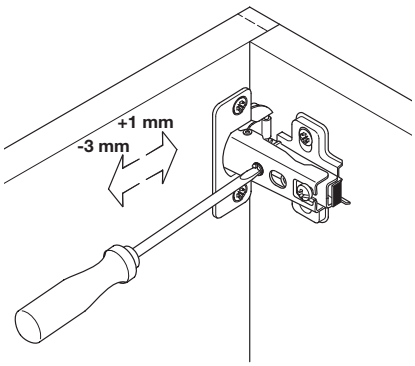

Horizontal
by screw adjustment (5 mm (3/16") of adjustment).

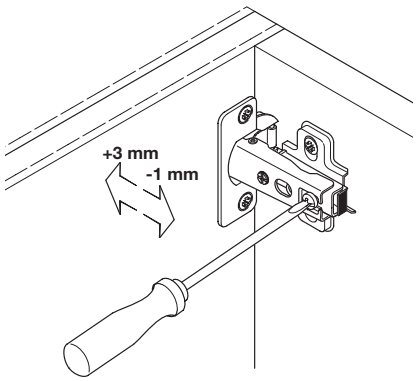

In-and-Out
by loosening the hinge-arm mounting screw (110°) or via cam adjustment (165°) (4 mm (5/32") of adjustment).

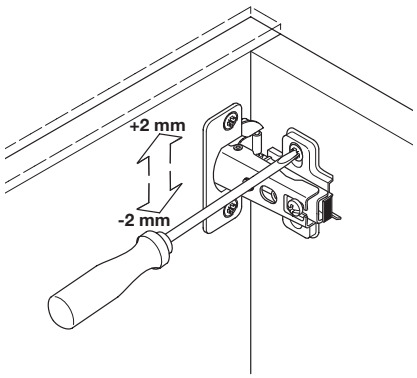

Vertical
via slots in the mounting plate or via cam adjustment (+/-2 mm (1/16") of adjustment).

→ Euro Jig Concealed Hinge Installation Tool

> Works for overlay and inset positioning
> Installs any brand of 35 mm hinge plates for doors up to 50" tall
> Material: Aluminum/Polycarbonate/Steel

	Item No.
	001.34.210

Note
Order euro bit self-centering too separately.

Dimensional data not binding. Dimensions in mm, inches are approximate. We reserve the right to alter specifications without notice.

Clip-on Hinge

Opening angle: 110°

> Door thickness: 14–20 mm (9/16"–13/16")
> Side panel thickness from: 16 mm (5/8")
> Soft close or self-close
> Tab: 3–7 mm (1/8"–9/32")
> Material: Steel; Finish: nickel-plated

→ Clip-on Hinge

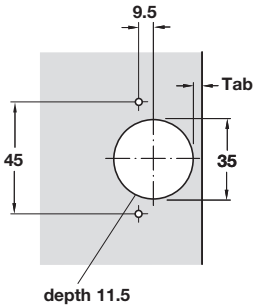

Flat Head #6

> Screw mounted

Mounting	Hinge arm	Hinge type	Self-close	Soft close
Full		14	315.03.500	315.00.703
Half		4	315.03.501	315.00.704
Inset		-4	315.03.502	315.00.705

→ Clip-on Hinge

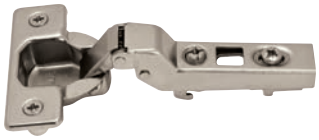

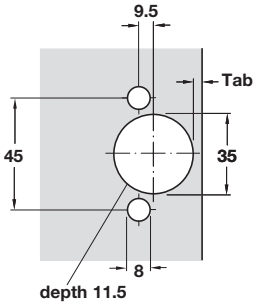

> Press-fit, 45/9.5 hole pattern

Mounting	Hinge arm	Hinge type	Self-close	Soft close
Full		14	315.03.510	315.00.713
Half		4	315.03.511	315.00.714
Inset		-4	315.03.512	315.00.715

Full overlay mounting
H=14+K-D

D / K / H	3	4	5	6	7
0	17	18	19	20	21
2	15	16	17	18	19
4	13	14	15	16	17

Half overlay mounting/twin mounting
H=4+K-D

D / K / H	3	4	5	6	7
0	7	8	9	10	11
2	5	6	7	8	9
4	3	4	5	6	7

Inset mounting
H=4+K+D

D / K / H	3	4	5	6	7
0	1	0	-1	-2	-3
2	3	2	1	0	-1
4	5	4	3	2	1

→ Cover Cap

> Material: Steel

Finish	Item No.
nickel-plated	313.21.510

Flat head screws pages 12.7-12.8, 12.10, 12.13

Dimensional data not binding. Dimensions in mm, inches are approximate. We reserve the right to alter specifications without notice.

Clip-on Hinge

Opening angle: 165°

> Side panel thickness from: 16 mm (5/8")
> Self-close and soft close with oil damper in arm
> Material: Steel; Finish: nickel-plated

→ Wide Angle Hinge

Full overlay

Inset mounting

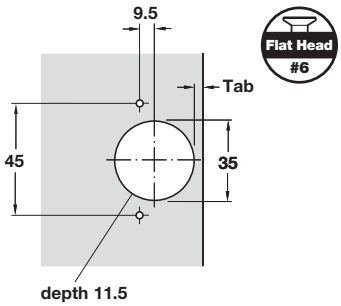

> Screw mounted
> Door thickness: 14–26 mm (9/16"–1")
> For inset applications: max. door thickness 19 mm (3/4")
> Tab: 3–7 mm (1/8"–9/32")

Mounting	Hinge arm	Hinge type	Self-close	Soft close
Full		14	315.02.500	315.02.700
Half		4	315.04.501	315.02.701
Inset		-4	315.04.502	315.02.702

→ Wide Angle Hinge

Half overlay

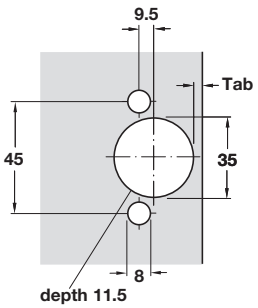

> Press-fit, 45/9.5 hole pattern
> Self-close

Mounting	Hinge arm	Hinge type	Item No.
Full		14	315.04.510
Half		4	315.04.511

→ 45° Corner Hinge

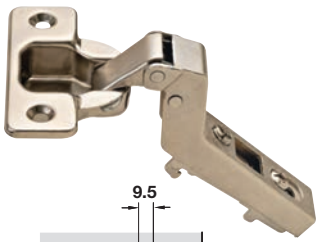

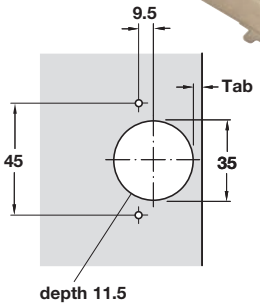

Sample installations

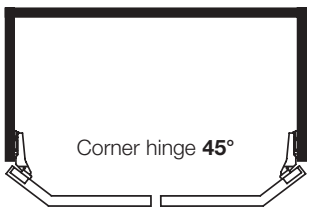

Opening angle: 92°

> Screw mounted
> Door thickness: 14–20 mm (9/16"–13/16")
> Tab: 4–7 mm (5/32"–9/32")

Mounting	Hinge arm	Self-close	Soft close
Overlay	45° angle	315.05.511	315.01.711

Mounting plates	page 9.68
Flat head screws	pages 12.7-12.8, 12.10, 12.13

Dimensional data not binding. Dimensions in mm, inches are approximate. We reserve the right to alter specifications without notice.

Blind Corner Hinge

> Door thickness: 16–20 mm (5/8"–13/16")
> Tab: 4–5 mm (5/32"–3/16")

→ Blind Corner Hinge

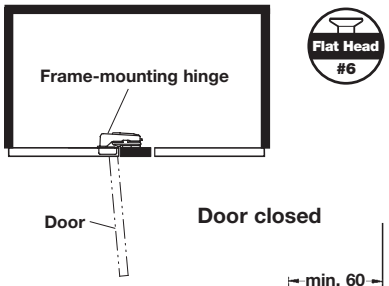

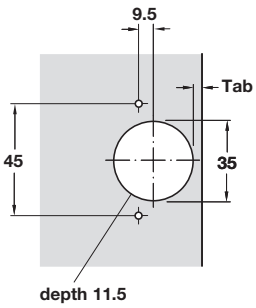

Opening angle: 92°

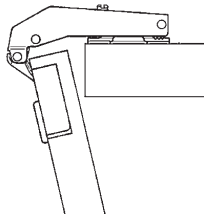

> Self-close or soft close with oil damper in arm
> Screw mounted
> Inset mounting
> Material: Steel; Finish: nickel-plated

Closing	Item No.
Self-close	315.05.540
Soft close	315.01.740

Note
Mounting plates, see below and next page

→ Mounting Plate

> Screw mounted with wood screws
> Material: Steel

Height	Item No.
0	315.98.650

→ Mounting Plate

> Screw mounted with wood screws
> Material: Steel

Height	Item No.
0	314.60.001

→ Pie-cut Corner Hinge

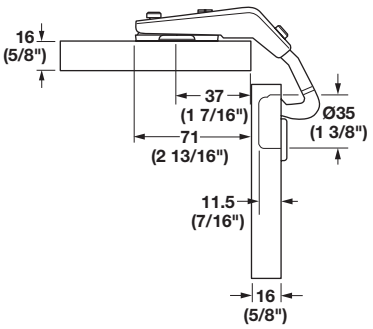

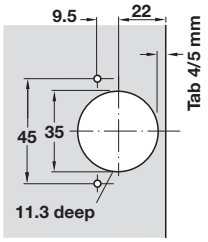

Opening angle: 60°

Alignment of the door corners can be made using the center adjustment screw in the arm.

The maximum space required to accommodate the hinge is 71 mm (2 13/16") with 16 mm (5/8") thick doors. With thicker doors the amount of space required is reduced.

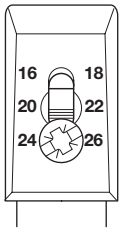

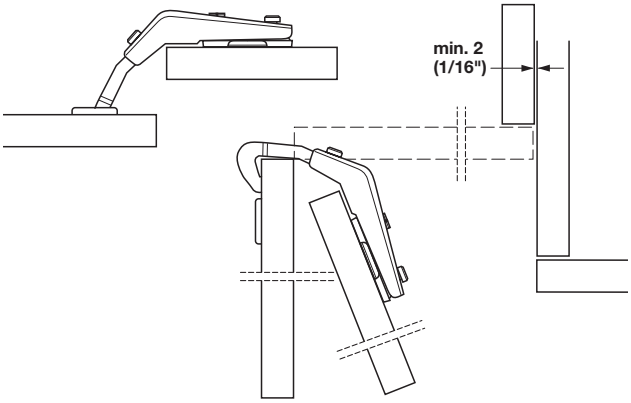

> Cup Ø: 35 mm (1 3/8"); Depth: 11.3 mm (7/16")
> Opening angle of first door 60°
> Self-close
> Tab: 4–5 mm (5/32"–3/16")

	Item No.
	314.52.440

Flat head screws pages 12.7-12.8, 12.10, 12.13

Dimensional data not binding. Dimensions in mm, inches are approximate. We reserve the right to alter specifications without notice.

Mounting Plates

→ Flanged Mounting Plate

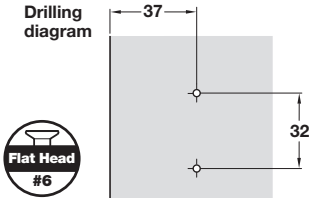

> One-piece
> Screw mounted
> Edge spacing 37 mm (1 1/2")
> With vertical adjustment (via slots)

Height	Item No.
0	315.98.520
2	315.98.522
4	315.98.524

→ Flanged Mounting Plate

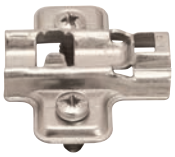

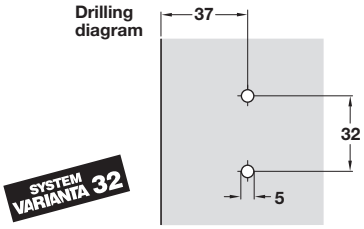

> One-piece
> Screw mounted in series drilled holes
> With pre-installed euro mounting screws
> 10 mm (3/8") length for single-side mounting
> Edge spacing: 37 mm (1 1/2")
> With vertical adjustment (via slots)

Height	Item No.
0	315.98.530
2	315.98.532
4	315.98.534

→ Mounting Plate

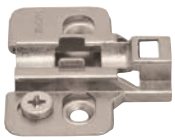

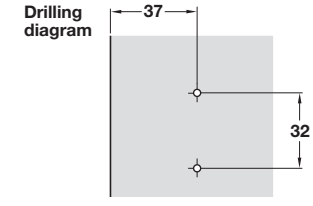

> With vertical cam adjustment

Height	Item No.
0	315.98.650
2	315.98.652
4	315.98.654

> Can only be used with clip-on hinges
> Material: Steel; Finish: nickel-plated

→ Face Frame Mounting Plate

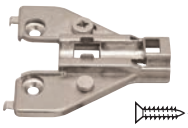

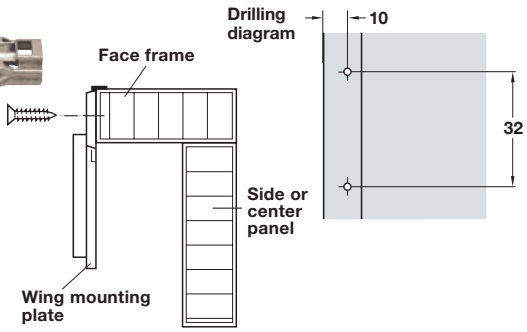

> Screw mounted
> Vertical cam adjustment

Mounting	Height	Item No.
5/8" overlay	0	315.99.500
1/2" overlay	3	315.99.503
3/8" overlay	6	315.99.506

→ Mounting Plate

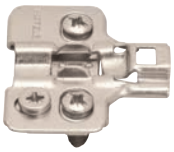

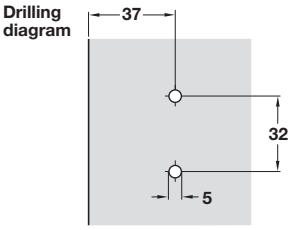

> With pre-installed euro mounting screws
> 10 mm (3/8") length for single-side mounting
> With vertical cam adjustment

Height	Item No.
0	315.98.660
2	315.98.662
4	315.98.664

> 8 mm (5/16") length screws for shared panels

Height	Item No.
0	315.98.760
2	315.98.762

Flat head screws pages 12.7-12.8, 12.10, 12.13

Dimensional data not binding. Dimensions in mm, inches are approximate. We reserve the right to alter specifications without notice.

Machines

→ Futura 250 Hinge Machine

> Vertical drilling and insertion of hinges and connectors, vertical line boring
> Power rating: 1.5 horsepower
> Required air pressure: 90 psi

Motor	Amps	Item No.
110V/60Hz	20	001.89.500
Single phase 220V/60Hz	10	001.89.501
3 phase 220V/60Hz	10	001.89.503

Supplied With
Pneumatic drilling unit with push button control
Ruler 600 mm (23 5/8")
2 Tilt stops with clamp lever
Worktop 600 x 400 mm (23 5/8" x 15 3/4")
2 Pneumatic hold-down clamps
Locking pin for fence depth adjustment with positive stops
Hinges - 22.5 mm
Line-boring - 37 mm
2 - 8 mm LH & 1 35 mm RH boring bits

Note
Order accessories separately, below.

→ Accessories – Order separately

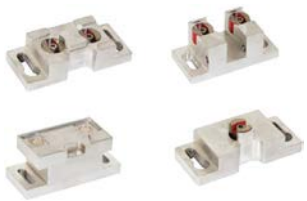

> For pulls on doors or drawer fronts
> Ideal for small to medium size shops
> With metric and inch scale
> Use a 4.5 mm or 3/16" drill
> Material: Polycarbonate with hardened steel bushings; Color: black

Description	Item No.
7 spindle line boring head	001.89.520
Hinge gear box	001.89.510
Insertion die for A-series 110° hinges	001.89.530
Insertion die for Aximat	001.89.531
Additional tilt stop	001.89.550
Extension ruler 1219 (48") - 2 pc. set	001.89.560

→ Replacement Bits

> Material: Carbide

Size / Handing	Item No.
35 x 57 RH	001.08.013
8 x 57 LH	001.06.870
Kit (35 x 57 RH) + (8 x 57 LH x 2)	001.06.871

Dimensional data not binding. Dimensions in mm, inches are approximate. We reserve the right to alter specifications without notice.

Slide-on Hinge

> All-metal
> Durable pivot bearing
> Steel moving parts
> Cup designed for automated insertion
> Self-closing
> Three-way adjustable

Slide-on mounting diagram

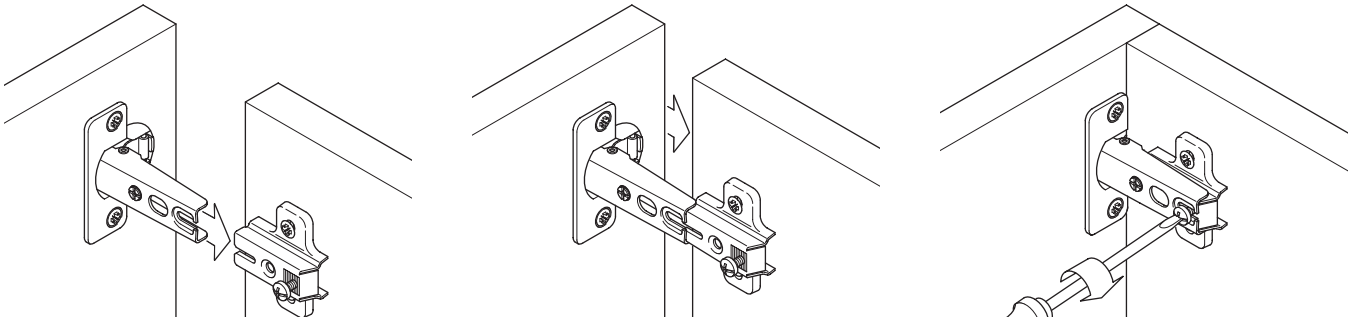

Adjustments

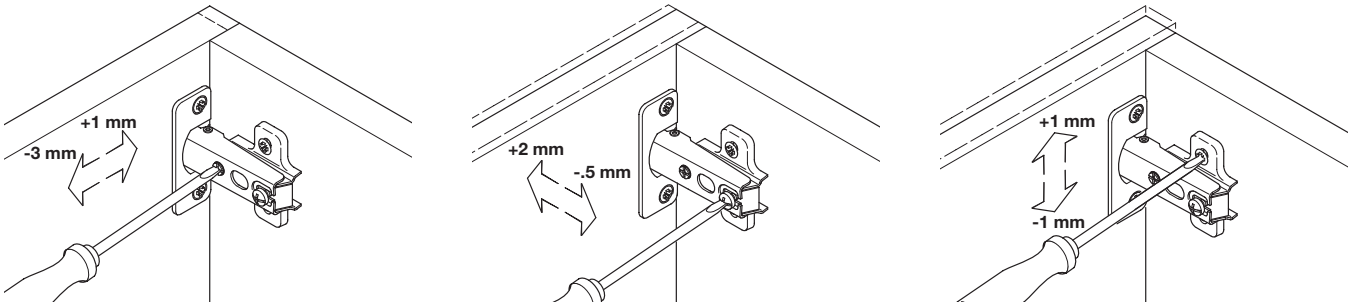

Horizontal
by screw adjustment
(5 mm (3/16") of adjustment).

In-and-Out
by loosening the hinge-arm mounting screw
(2.5 mm (1/8") of adjustment).

Vertical
via slots in the mounting plate
(2 mm (1/16") of adjustment).

Slide-on hinges

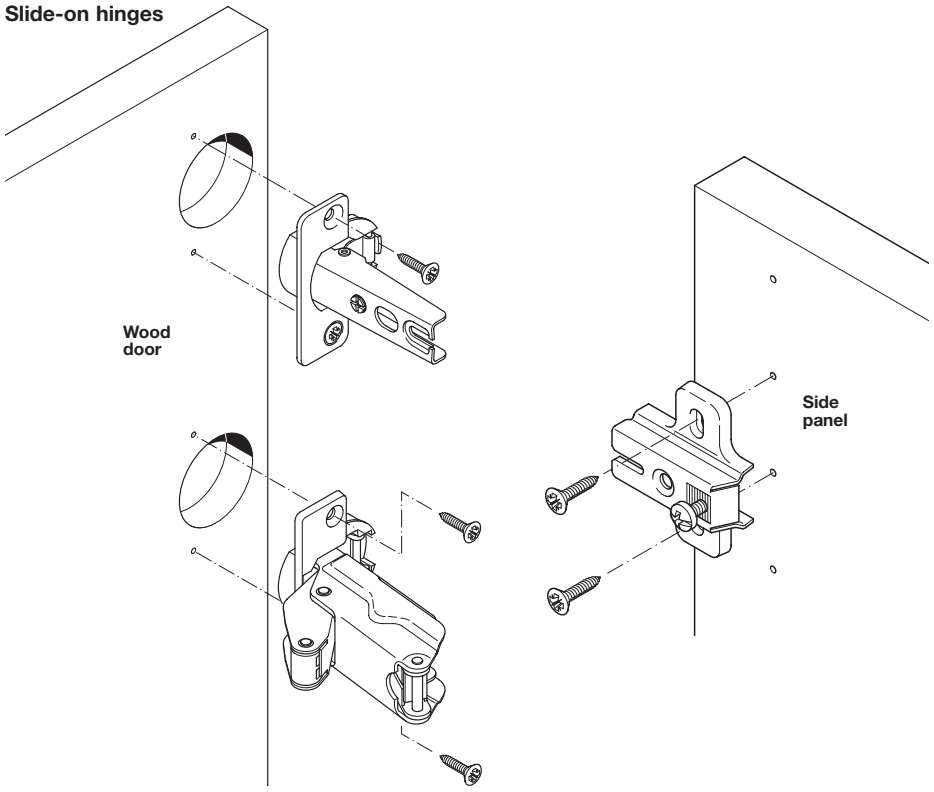

Dimensional data not binding. Dimensions in mm, inches are approximate. We reserve the right to alter specifications without notice.

Slide-on Hinges

Opening angle: 110°

> Door thickness: 14–26 mm (9/16"–1")
> Side panel thickness: from 16 mm (5/8")
> Self-closing
> Tab: 3–7 mm (1/8"–9/32")
> Material: Steel; Finish: nickel-plated

→ Slide-on Hinge

Flat Head #6

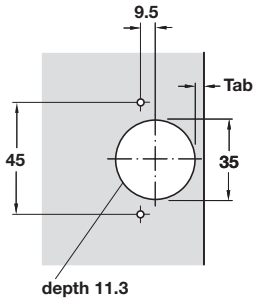

> Screw mounted

Mounting	Hinge arm		Hinge type	Item No.
Full overlay		straight	13	311.90.520
Half overlay		8 mm crank	5	311.90.521
Inset mounting		17 mm crank	-4	311.90.522

→ Slide-on Hinge

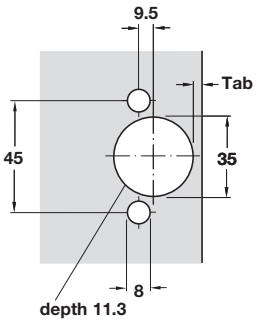

> Press-fit, 45/9.5 hole pattern

Mounting	Hinge arm		Hinge type	Item No.
Full overlay		straight	13	311.90.560

→ Flanged Mounting Plates

Drilling diagram

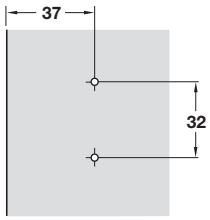

> One-piece
> Screw mounted
> Pre-installed hinge arm retaining screw
> With vertical adjustment (via slots)
> Edge spacing: 37 mm (1 1/2")

Height	VP type	Item No.
-2	-2	311.98.505
0	0	311.98.500
2	2	311.98.502
4	4	311.98.504

Flat head screws	pages 12.7-12.8, 12.10, 12.13
Varianta screws	page 12.16

Dimensional data not binding. Dimensions in mm, inches are approximate. We reserve the right to alter specifications without notice.

S-Series Hinges

Opening angle: 100°

> Pivot pin for hinge arm is steel and sealed against corrosion
> S-Series hinges will only work with S-Series mounting plates
> Door thickness: 15–20 mm (9/16"–13/16")
> Side panel thickness: from 16 mm (5/8")
> Tab: 3–5 mm (1/8"–3/16")
> Material: 304 Stainless Steel, polished

→ Stainless Steel Hinge

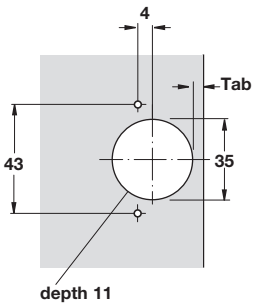

> Screw mounted
> Self-closing

Mounting	Hinge arm		Hinge type	Item No.
Full overlay		straight	16	327.20.000
Half overlay		9 mm crank	6	327.20.002

Supplied With
Stainless Steel screws

→ Flanged Mounting Plate

Hole pattern

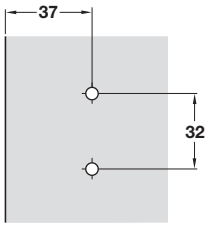

> Screw mounted

Height	Hinge type	Item No.
2	2	327.30.000

Supplied With
Stainless Steel screws

→ Flanged Mounting Plate

Hole pattern

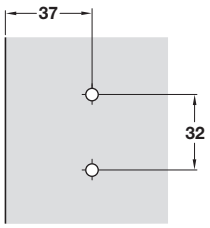

> Screw mounted
> With vertical adjustment in oblong mounting holes

Height	Hinge type	Item No.
2	2	327.30.030

Supplied With
Stainless Steel screws

Dimensional data not binding. Dimensions in mm, inches are approximate. We reserve the right to alter specifications without notice.

Salice Face Frame

→ 2 Cam

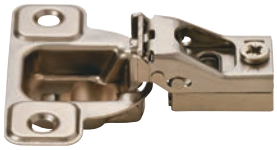

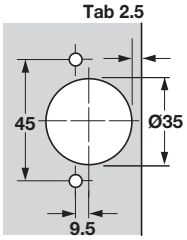

Opening angle: 106°

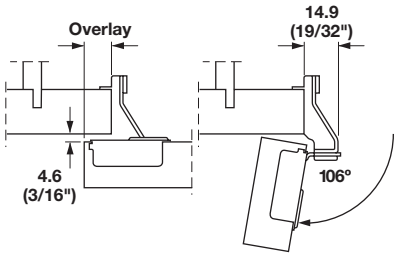

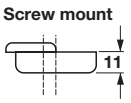

> Screw mounted
> 2 eccentric cam adjustments
> Vertical adjustment: ± 2.5 mm (1/8")
> In and out cam adjustment: -0.5 mm (1/64") +2.5 mm (1/8")
> Horizontal cam adjustment: ±1.5 mm (1/16")
> Without mounting plate
> Attaches directly to face frame
> Finish: nickel-plated
> Material: Steel; Finish: nickel-plated

Overlay	Model	Item No.
6 (1/4")	CSP3Y99	343.60.500
13 (1/2")	CSP3799	343.61.500

→ Reduction Clip

> Compatible with all overlays
> Clips on easy
> Limits opening to 86°

Model	Item No.
SUP337XG	329.24.509

→ Excentra

> Perfect door alignment is simple to achieve with 2 automatic cam adjustments
> Features an 11 mm (7/16") cup depth to accommodate narrow door profiles
> The easy to use activation switch allows for closing speed options
> With integrated soft close
> Tab: 2.5 mm (1/8") for 12 mm (1/2")
2.5–4 mm (1/8"–5/32") for 32 mm (1 1/4")
> Minimum door thickness: 15 mm (9/16")
> Material: Steel

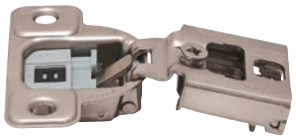

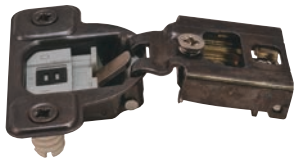

Opening angle: 106°

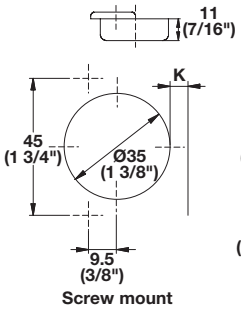

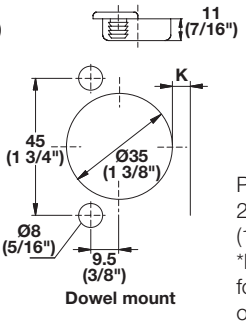

Possible "K" = 2.5 mm–4 mm (1/8"–5/32")
*K of 4 mm (5/32") for 32 mm (1 1/4") overlay only.

> Overlay: 12 mm (1/2")

Finish	Mounting	Model	Item No.
nickel-plated	screw	CUP37D9	343.61.520
	dowel	CUR37D9	343.61.521
titanium	screw	CUP37D6	343.61.524

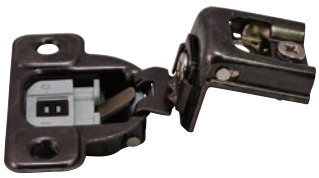

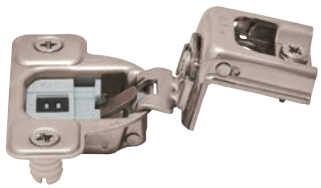

> Overlay: 32 mm (1 1/4")

Finish	Mounting	Model	Item No.
nickel-plated	screw	CUP3AD9	343.61.522
	dowel	CUR3AD9	343.61.523
titanium	screw	CUP3AD6	343.61.526

#8 Modified truss head screw page 12.15

Dimensional data not binding. Dimensions in mm, inches are approximate. We reserve the right to alter specifications without notice.

Salice Face Frame

Opening angle: 106°

> Stamped steel
> Cup depth: 11 mm (7/16")
> Opening angle 106°
> Tab fixed at 2.5 mm (3/32")
> Zero door protrusion
> Self-closing
> 3-way adjustment with wing plate
> Material: Steel; Finish: nickel-plated

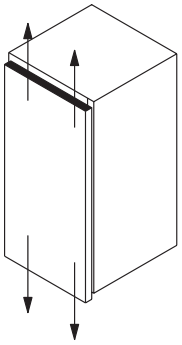

Height adjustment 1/16" (± 1.5 mm)

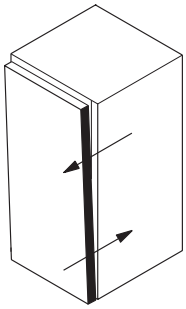

Depth adjustment by eccentric cam 1/8" (-0.5 mm) 7/64" (+2.5)

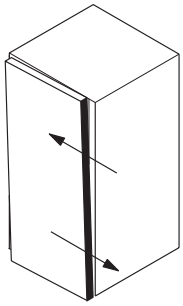

Side adjustment by eccentric cam 1/16" (± 1.5 mm)

→ 3 Cam

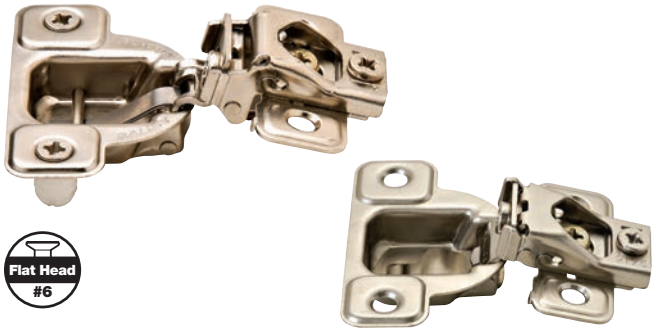

Flat Head #6

Overlay	Mounting	Model	Item No.
12 (1/2")	screw	CSP3799XR	343.62.500
12 (1/2")	dowel	CSR3799XR	343.62.510
19 (3/4")	screw	CSP3499XR	343.62.503
19 (3/4")	dowel	CSR3499XR	343.62.513
26 (1")	screw	CSP3299NR	343.62.504
26 (1")	dowel	CSR3299NR	343.62.514
32 (1 1/4")	screw	CSP3A99NR	343.62.506
32 (1 1/4")	dowel	CSR3A99NR	343.62.516
35 (1 3/8")	screw	CSP3C99NR	343.62.520
36 (1 7/16")	screw	CSP3D99NR	343.62.522

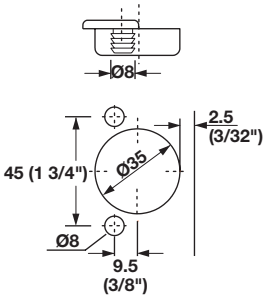

Dowel-mount

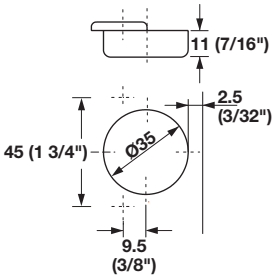

Screw-mount

Face Frame Cabinet

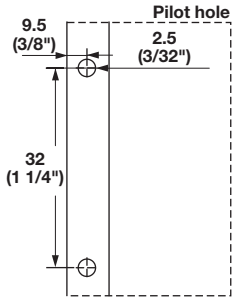

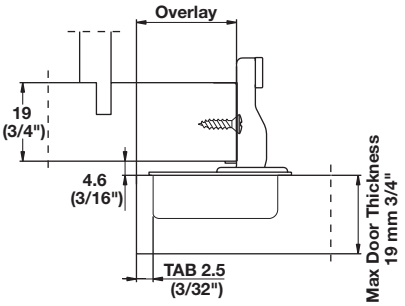

Zero door protrusion

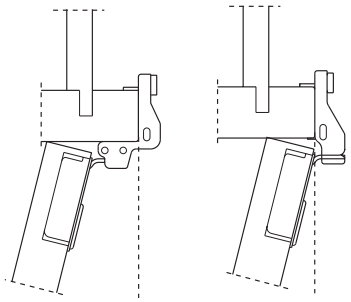

Flat head screws pages 12.7-12.8, 12.10, 12.13

Dimensional data not binding. Dimensions in mm, inches are approximate. We reserve the right to alter specifications without notice.

Salice Excenthree

Opening angle: 106°

- > Ideal for re-facing and applications where frame thickness varies
- > Perfect door alignment is simple to achieve with 3 automatic cam adjustments
- > Features an 11 mm (7/16") cup depth to accommodate narrow door profiles
- > The easy to use activation switch allows for closing speed options
- > Tab 2.5 mm (1/8"); can be increased to 5.5 mm (1/4") for special application
- > Zero door protrusion: from 19–35 mm (3/4"–1 3/8")
- > With integrated soft close
- > Material: Steel

→ 3 Cam

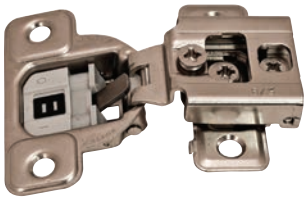

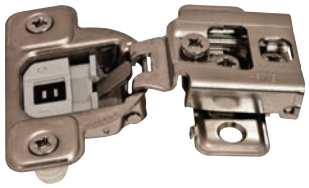

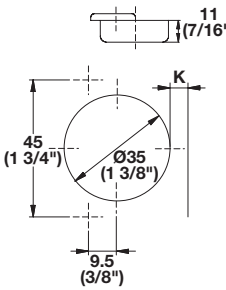

Screw mounted

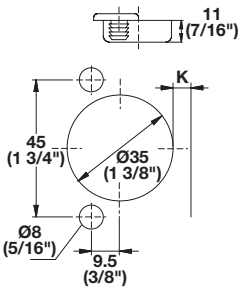

Dowel mounted

Finish	Model	Overlay	Mounting	Item No.
nickel-plated	CUP37D9R	12 (1/2")	screw	343.61.530
	CUR37D9R	12 (1/2")	dowel	343.61.531
	CUP3AD9R	32 (1 1/4")	screw	343.61.556
	CUR3AD9R	32 (1 1/4")	dowel	343.61.557
	CUP34D9R	19 (3/4")	screw	343.61.546
	CUR34D9R	19 (3/4")	dowel	343.61.547
	CUP32D9R	26 (1")	screw	343.61.550
	CUR32D9R	26 (1")	dowel	343.61.551
	CUP3CD9R	32 (1 3/8")	screw	343.61.566
	CUR3CD9R	32 (1 3/8")	dowel	343.61.567
titanium	CUR37D6R	12 (1/2")	dowel	343.61.533
	CUR3AD6R	32 (1 1/4")	dowel	343.61.559

Possible "K" = 2.5 mm–4 mm (1/8"–1/4")
*K of 4 mm (5/32") for 32 mm (1 1/4") overlay only

Silentia with motion control switch

Set dampening effect to **"OFF"** by sliding the switch to **O**

Set dampening effect to **"ON"** by sliding the switch to **I**

Adjustment

Cam depth adjustment

Cam side adjustment

Cam height adjustment

Pan head screws pages 12.9-12.10

Dimensional data not binding. Dimensions in mm, inches are approximate. We reserve the right to alter specifications without notice.

Grass TEC Face Frame

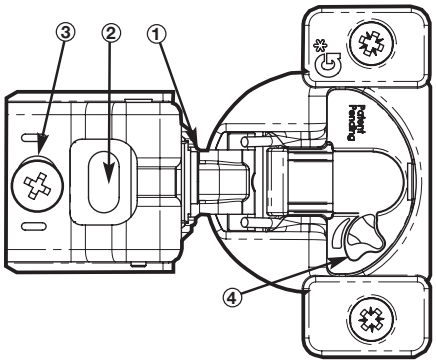

soft&silent

> Each hinge is adjustable to fit any door and close to any pressure
> Made in USA

1. Side adjustment:
   Rotate cam adjustment screw ± 1.5 mm (1/16")
2. Height adjustment:
   Loosen screw, align door, tighten screw ± 2 mm (3/32")
3. Depth adjustment:
   Rotate cam screw out 2.5 mm (3/32") / in .5 mm (1/32")
4. Soft close tension:
   Light, medium and strong settings

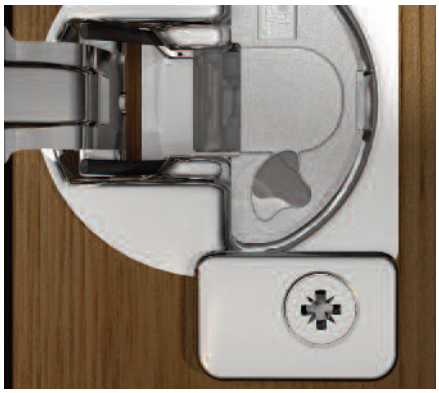

① Light

This is the “Light” setting for the soft close mechanism. Set here for light or small doors with very little closing pressure.

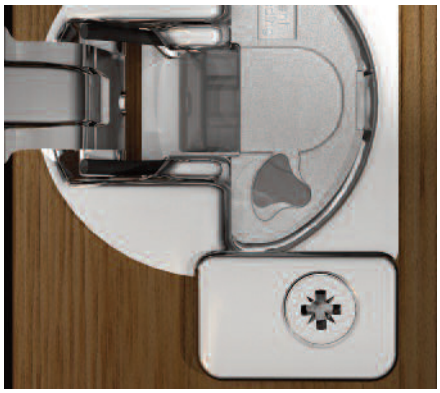

② Medium

This is the “Medium” setting for the soft close mechanism. Set here for average size doors with normal closing pressure.

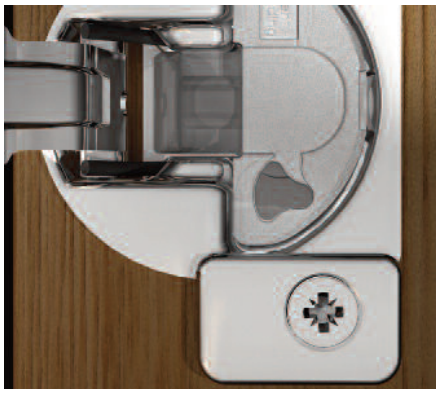

③ Strong

This is the “Strong” setting for the soft close mechanism. Set here for larger or heavier doors with a strong closing pressure. (Factory setting)

Note
To reset the soft close, move the adjustment switch to “Strong” then to the desired position. Close the door and the soft close will be reset.

Dimensional data not binding. Dimensions in mm, inches are approximate. We reserve the right to alter specifications without notice.

Grass TEC Face Frame

> One-piece hinge and base plate
> 3-dimensional adjustment
> Cam side and depth adjustment
> Soft close mechanism is pre-mounted in the hinge cup
> Adjustment switch to regulate closing action
> Cup drilling depth: 11 mm (7/16")
> Overlay: 6–38 mm (1/4"–1 1/2") or > 36 mm (1 7/16")
> Made in USA
> Material: Steel; Finish: nickel-plated

soft&silent Opening angle: 108° Flat Head #6

→ Face Mount

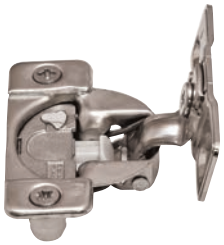

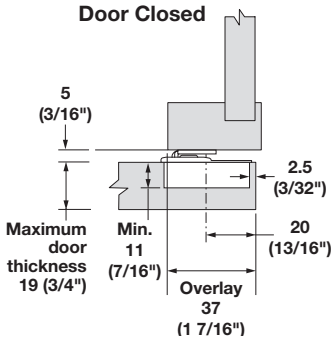

> For overlay 36 mm (1 7/16") and greater

Mounting	Item No.
Screw	348.90.090
Dowel	348.90.091

Door Thickness	Minimum Reveal
16 (5/8")	4.2 (5/32")
17.5 (11/16")	5.4 (7/32")
19 (3/4")	6.7 (1/4")

Note
Hinge cup to door: #6 x 5/8" flat head
Plate to frame: #10 x 3/4" pan head

→ Side Mount

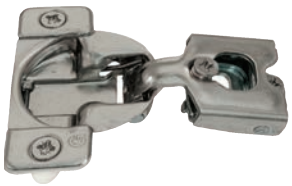

> Screw mounted

Overlay	Item No.
6 (1/4")	348.90.120

→ Wrap Around

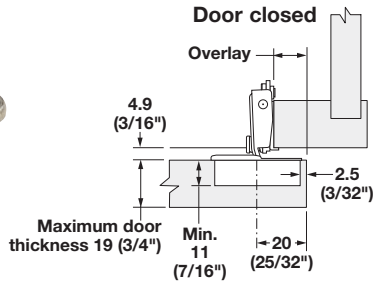

> Front and rear locating tabs position hinge on face frame

Overlay	Door clearance	Arm clearance	Dowel	Screw
6 (1/4")	11 (7/6")	14.5 (9/16")	348.90.020	348.90.010
12 (1/2")	3.5 (1/8")	11 (7/16")	348.90.022	348.90.012
19 (3/4")	0	11 (7/16")	348.90.023	348.90.013
26 (1")	0	11 (7/16")	348.90.024	348.90.014
32 (1 1/4")	0	10 (13/32")	348.90.025	348.90.015
35 (1 3/8")	0	10 (13/32")	348.90.027	348.90.017
38 (1 1/2")	0	10 (13/32")	348.90.028	348.90.018

→ Side Mount

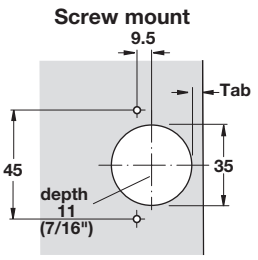

> Dowel mounted
> Front locating tabs position hinge on face frame

Overlay	Door clearance	Arm clearance	Item No.
12 (1/2")	3.5 (1/8")	11 (7/16")	348.90.000
32 (1 1/4")	0	10 (13/32")	348.90.001

Flat head screws pages 12.7-12.8, 12.10, 12.13

Dimensional data not binding. Dimensions in mm, inches are approximate. We reserve the right to alter specifications without notice.

Face Frame

→ Face Frame Hinge

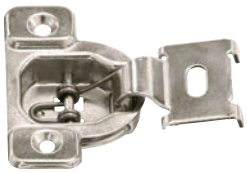

Opening angle: 110°

Pan Head #8

Hole Pattern

Press-fit

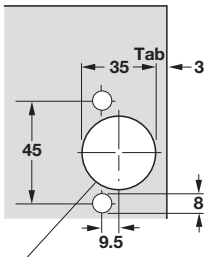

Door overlay: "x"

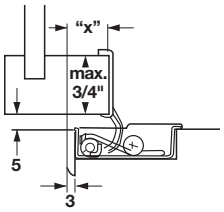

> Press-fit
> Door overlay (X): 12 mm (1/2")
> Door thickness: 14–26 mm (9/16"–1")
> Cup depth: 10.5 mm (3/8")
> Self-closing
> Tab fixed at 3 mm (1/8")
> Material: Steel

Finish	Item No.
nickel-plated	314.52.495

→ Wing Mounting Plate

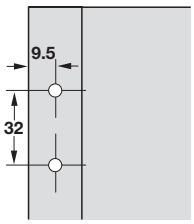

> Screw mounted
> With pre-installed hinge arm mounting screw
> Material: Steel; Finish: nickel-plated

Height	Item No.
0	314.60.000

→ Short Arm Hinge

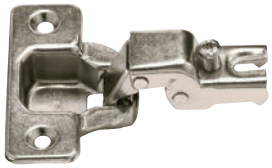

Opening angle: 105°

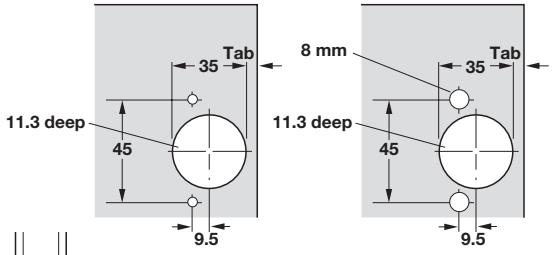

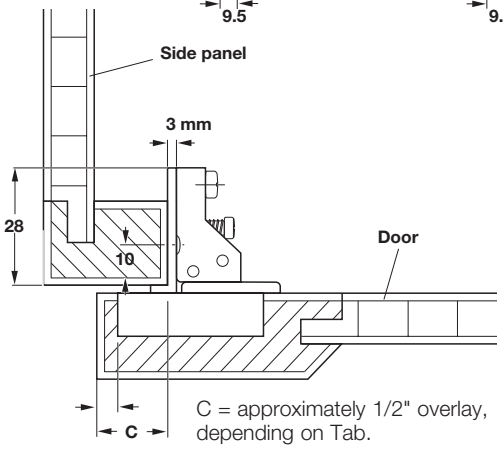

> Door thickness: 14–26 mm (9/16"–1")
> Tab: 3–6 mm (1/8"–1/4")
> Self-closing
> Material: Steel; Finish: nickel-plated

Mounting	Hinge arm	Item No.
Screw		314.52.400
Press-fit		314.52.410

Note
Corresponding mounting plates sold separately (see left).

Pan head screws pages 12.9-12.10

Dimensional data not binding. Dimensions in mm, inches are approximate. We reserve the right to alter specifications without notice.

Drilled-in Hinges

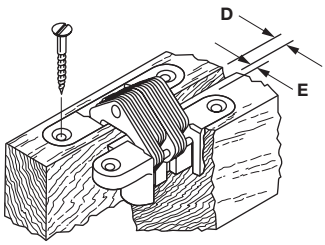

Opening angle: 180°

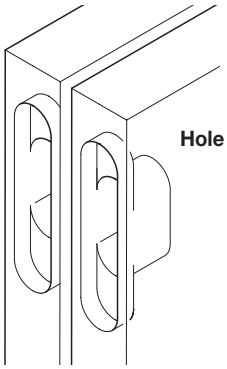

Hole pattern

→ Invisible Hinge

> Material: Case: Zinc, die-cast; Linkage: Steel

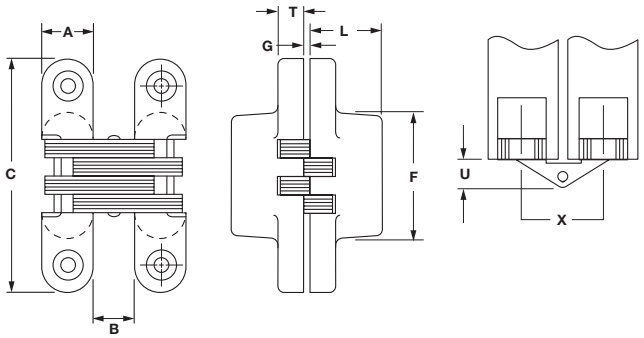

Supplier Item No.								
	101	203	204	208	212	216	218	220
Finish	**Item No.**							
satin brass	341.07.518	341.07.527	341.07.536	341.07.545	341.07.554	341.07.563	-	-
satin chrome	341.07.718	341.07.727	341.07.736	341.07.745	341.07.754	341.07.763	341.07.772	341.07.781
Wood thickness	13–18 (1/2"–11/16")	19–25 (3/4"–1")	19–25 (3/4"–1")	26–28 (1"–1 1/8")	29–31 (1 1/8"–1 1/4")	35–44 (1 3/8"–1 3/4")	45–50 (1 3/4"–2")	51 + (2"+)

Supplied With Mounting screws

Dimension								
A	9.5	12.7	12.7	15.9	19.1	25.4	28.6	34.9
B	7.5	9.1	9.1	11.5	13.5	18.3	22.2	27.0
C	42.9	44.5	60.3	69.9	95.3	117.5	117.5	139.7
D	2.8	2.8	2.8	3.6	4.0	5.6	9.5	12.7
E	2.4	3.2	3.2	4.0	4.8	6.4	6.4	7.1
F	22.2	19.1	31.8	34.1	52.4	65.9	61.9	74.6
G	0.8	0.8	1.6	1.2	1.2	1.6	1.6	1.6
L	11.5	18.3	18.3	23.0	27.4	36.5	41.7	49.2
T	5.6	4.8	6.4	7.1	9.5	11.9	10.3	11.9
U	4.8	6.4	6.4	7.9	10.3	14.3	13.5	17.5
X	17.1	21.8	21.8	27.4	32.5	43.7	50.8	61.9

→ Wood Router Guide

> L x W x H: 305 x 76 x 16 mm (12" x 3" x 5/8")

Guide	#101	#203	#204	#208	#212	#216	#218	#220
Bit size	6 (1/4")	10 (3/8")	10 (3/8")	10 (3/8")	10 (3/8")	13 (1/2")	13 (1/2")	13 (1/2")
Item No.	002.13.810	002.13.811	002.13.812	002.13.813	002.13.814	002.13.815	002.13.816	002.13.817

Dimensional data not binding. Dimensions in mm, inches are approximate. We reserve the right to alter specifications without notice.

Zysa Hinges

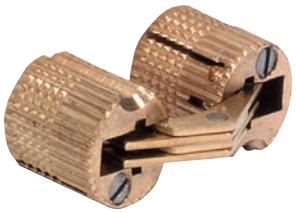

Opening angle: 180°

- > Can be used left or right
- > Tighten the tensioning screw to ensure a secure grip in wood
- > Additional holding power for exceptionally high loads is achieved by installing a wood screw through exposed end
- > Drilling must be extremely accurate
- > Material: Brass, matt

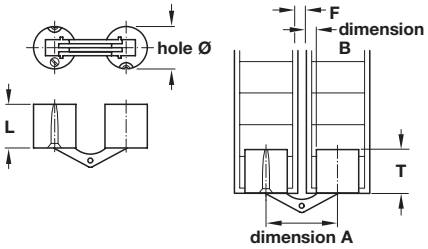

Wood thickness	Screw Ø	L	Hole Ø	T	A	B	F	Item No.
17–22 (11/16"–7/8")	3	13.5 (17/32")	12 (1/2")	13.5 (17/32")	20 (25/32")	2.2 (1/16")	3.5 (21/64")	341.21.520
22–28 (7/8"–1")	3.5	16.5 (5/8")	16 (5/8")	16.5 (5/8")	25 (1")	3 (1/8")	3 (1/8")	341.21.540

Butting, inset door:

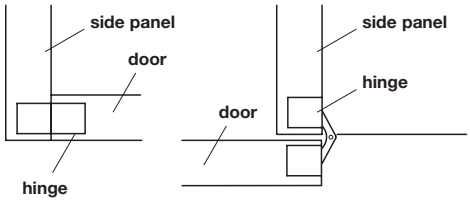

Door closed Door open

Butting, overlay door:

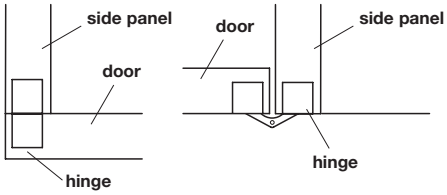

Door closed Door open

Joining two panels:

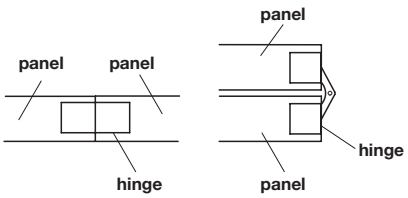

Panel closed Panel open

Butting overlay doors:

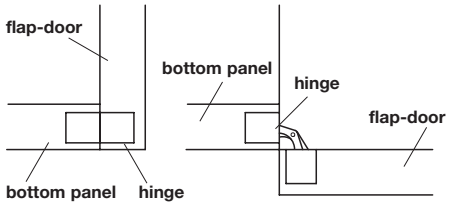

Flap-door closed Flap-door open

Typical folding door installation:

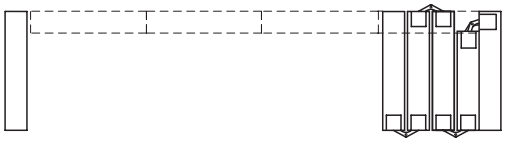

Hole pattern, Zysa hinges

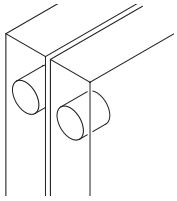

Flat head screws pages 12.7-12.8, 12.10, 12.13

Dimensional data not binding. Dimensions in mm, inches are approximate. We reserve the right to alter specifications without notice.

→ Easy Mount Hinge

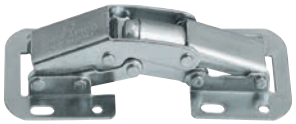

Max. door opening angle: 90°

Sample installations

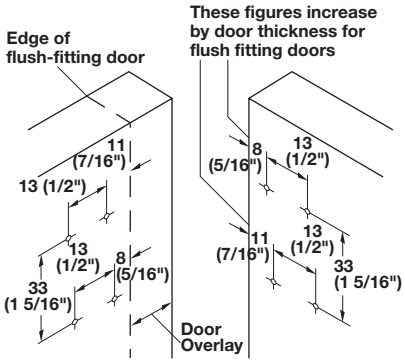

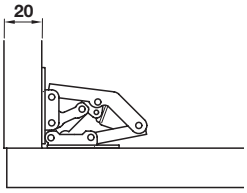

Overlay mounting

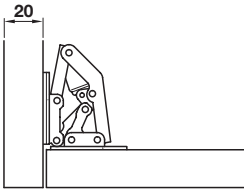

Inset mounting

> Screw mounted
> Self-closing
> Door thickness: 16–20 mm (5/8"–25/32")
> Side panel thickness: 16–22 mm (5/8"–7/8")
> Horizontal adjustment, oblong holes
> Material: Steel

Finish	Item No.
zinc-plated	343.33.920

→ Pie-cut Corner Hinge Hinge

Max. door opening angle: 78°

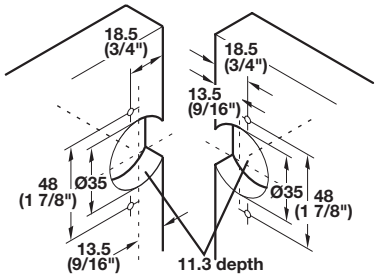

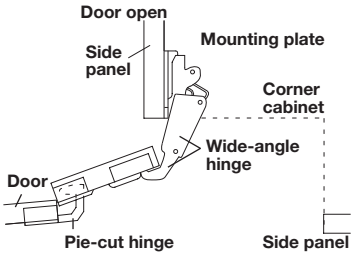

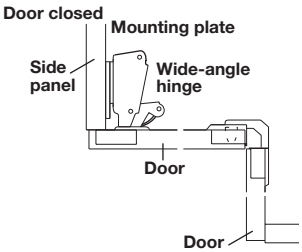

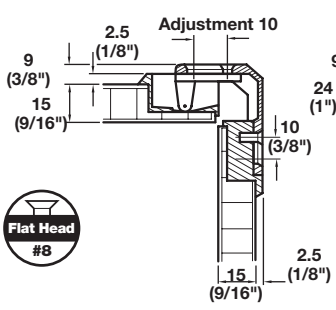

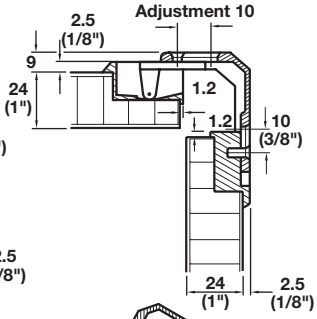

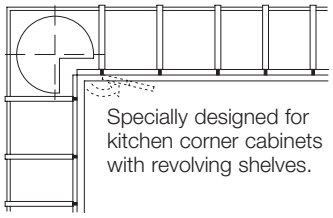

Specially designed for kitchen corner cabinets with revolving shelves.

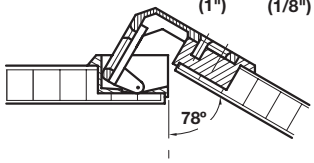

> Screw mounted
> With two 35 mm (1 3/8") cup holes
> Door thickness variable: 15–24 mm (9/16"–15/16")
> Hole Ø: 35 mm (1 3/8"); Depth: 11 mm (7/16")
> Meets all design requirements for three-way adjustability, quick mounting, concealed installation and sturdy construction
> Adjustable to allow a small air circulation gap
> Material: Zinc die-cast

Finish	Item No.
nickel-plated	343.90.710

Flat head screws pages 12.7-12.8, 12.10, 12.13

Dimensional data not binding. Dimensions in mm, inches are approximate. We reserve the right to alter specifications without notice.

ELITE

Häfele's ELITE Decorative Butt Hinge program provides a complete assortment of hinge choices to complement your decorative hardware.

> Solid brass hinges with decorative finials
> Beautiful finishes designed to complement your handle or knob
> For inset face frame doors
> 2-way adjustable

→ Non-Mortised Hinges

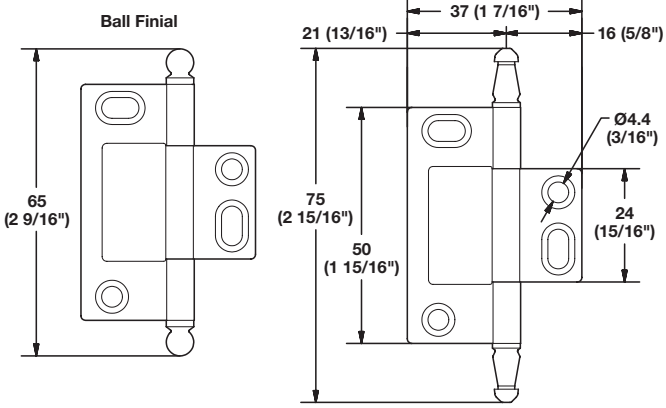

> Material: Brass

Finish	Minaret finial	Ball finial
antique brass	351.95.180	351.95.182
oil-rubbed bronze	351.95.190	351.95.192
polished chrome	351.95.280	351.95.282
black	351.95.380	351.95.382
satin chrome	351.95.480	351.95.482
brushed brass	351.95.580	351.95.582
brushed nickel	351.95.680	351.95.682
polished nickel	351.95.780	351.95.782
polished brass	351.95.880	351.95.882
pewter	351.95.980	351.95.982

Note
Order #5 x 5/8" screws separately.

→ Flat Head Countersunk Wood Screws

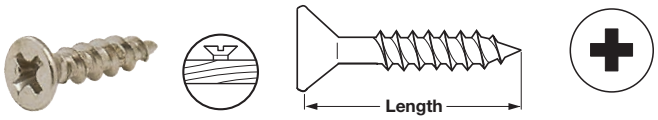

> Deep thread design provides maximum holding power in a variety of different woods and man-made materials
> With extra-deep Phillips Recess to help minimize bit slippage
> Material: Steel, plated

Finish	Length	Item No.
antique brass	#5 x 5/8"	010.77.136
oil-rubbed bronze	#5 x 5/8"	010.77.536
polished chrome	#5 x 5/8"	010.77.236
black	#5 x 5/8"	010.77.336
satin chrome	#5 x 5/8"	010.77.436
satin nickel	#5 x 5/8"	010.77.636
polished brass	#5 x 5/8"	010.77.836
pewter	#5 x 5/8"	010.77.936
polished nickel	#5 x 5/8"	010.77.604

Supplied With
1000 pcs.

Dimensional data not binding. Dimensions in mm, inches are approximate. We reserve the right to alter specifications without notice.

ELITE

Häfele's ELITE Decorative Butt Hinge program provides a complete assortment of hinge choices to complement your decorative hardware.

> Solid brass hinges with decorative finials
> Beautiful finishes designed to complement your handle or knob
> For inset face frame doors
> Mortised on cabinet and/or door side
> 2-way adjustable

→ Mortised Hinges

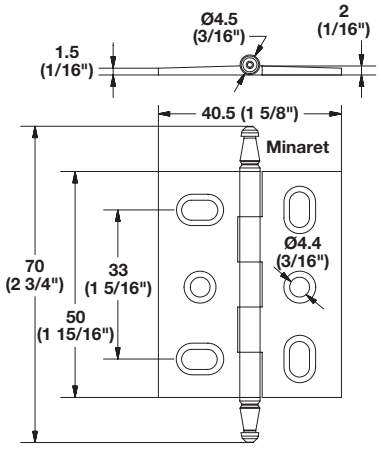

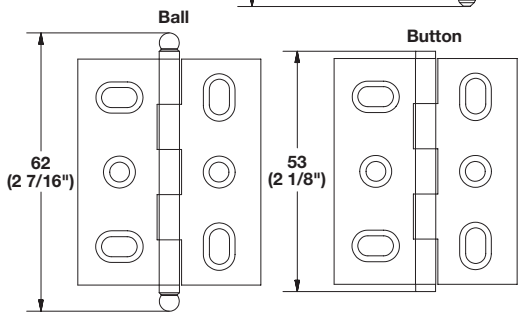

> Material: Brass

Finish	Minaret finial	Ball finial	Button finial
antique brass	354.17.100	354.17.120	354.17.140
oil-rubbed bronze	354.17.110	354.17.130	354.17.150
polished chrome	354.17.200	354.17.210	354.17.220
black	354.17.300	354.17.310	354.17.320
satin chrome	354.17.400	354.17.410	354.17.420
brushed brass	354.17.500	354.17.510	354.17.520
brushed nickel	354.17.600	354.17.610	354.17.620
polished nickel	354.17.700	354.17.710	354.17.720
polished brass	354.17.800	354.17.810	354.17.820
pewter	354.17.900	354.17.910	354.17.920

Note
Order #6 x 5/8" screws separately.

→ Flat Head Countersunk Wood Screws

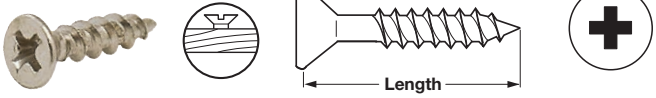

> Deep thread design provides maximum holding power in a variety of different woods and man-made materials
> With extra-deep Phillips Recess to help minimize bit slippage
> Material: Steel, plated

Finish	Length (inches)	Item No.
antique brass	#6 x 5/8"	010.77.146
oil-rubbed bronze	#6 x 5/8"	010.77.546
polished chrome	#6 x 5/8"	010.77.246
black	#6 x 5/8"	010.77.346
satin chrome	#6 x 5/8"	010.77.446
satin nickel	#6 x 5/8"	010.77.646
polished brass	#6 x 5/8"	010.77.846
pewter	#6 x 5/8"	010.77.946
polished nickel	#6 x 5/8"	010.77.606

Supplied With
1000 pcs.

Dimensional data not binding. Dimensions in mm, inches are approximate. We reserve the right to alter specifications without notice.

ELITE

Häfele's ELITE Decorative Butt Hinge program provides a complete assortment of hinge choices to complement your decorative hardware.

> Solid brass hinges with decorative finials
> Beautiful finishes designed to complement your handle or knob
> For inset face frame doors
> Mortised on cabinet and/or door side
> 2-way adjustable
> Complements thicker and larger doors

→ Mortised Hinges

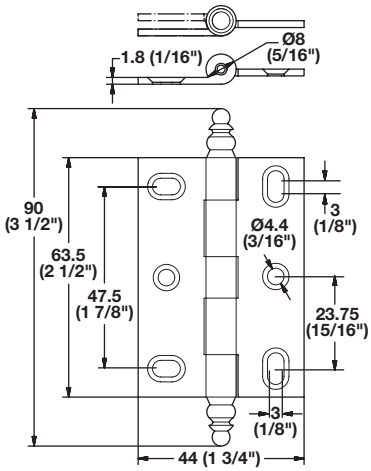

> With minaret finial
> Material: Brass

Finish	Item No.
antique brass	354.36.100
oil-rubbed bronze	354.36.110
polished chrome	354.36.200
black	354.36.300
satin chrome	354.36.400
brushed brass	354.36.500
brushed nickel	354.36.600
polished nickel	354.36.700
polished brass	354.36.800
pewter	354.36.900

Note
Order #6 x 5/8" screws separately.

→ Flat Head Countersunk Wood Screws

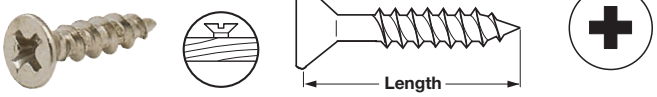

> Deep thread design provides maximum holding power in a variety of different woods and man-made materials
> With extra-deep Phillips Recess to help minimize bit slippage
> Material: Steel, plated

Finish	Length	Item No.
antique brass	#6 x 5/8"	010.77.146
oil-rubbed bronze	#6 x 5/8"	010.77.546
polished chrome	#6 x 5/8"	010.77.246
black	#6 x 5/8"	010.77.346
satin chrome	#6 x 5/8"	010.77.446
satin nickel	#6 x 5/8"	010.77.646
polished brass	#6 x 5/8"	010.77.846
pewter	#6 x 5/8"	010.77.946
polished nickel	#6 x 5/8"	010.77.606

Supplied With
1000 pcs.

Dimensional data not binding. Dimensions in mm, inches are approximate. We reserve the right to alter specifications without notice.

> For inset face frame doorsw
> Quick and easy mounting
> 2-way adjustable

→ Full Wrap Non-mortised Hinges

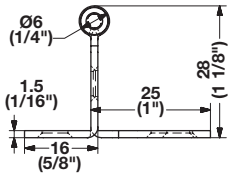

> Material: Steel

Finish	Minaret finial	Ball finial
antique brass	351.86.100	351.86.140
dark oil-rubbed bronze	351.86.110	351.86.150
copper bronze	351.86.180	351.86.185
chrome-plated	351.86.200	351.86.220
black	351.86.300	351.86.320
satin chrome	351.86.400	351.86.420
matt nickel	351.86.600	351.86.620
brass-plated	351.86.800	351.86.820
pewter	351.86.900	351.86.920

Note
Order #6 wood screws separately.

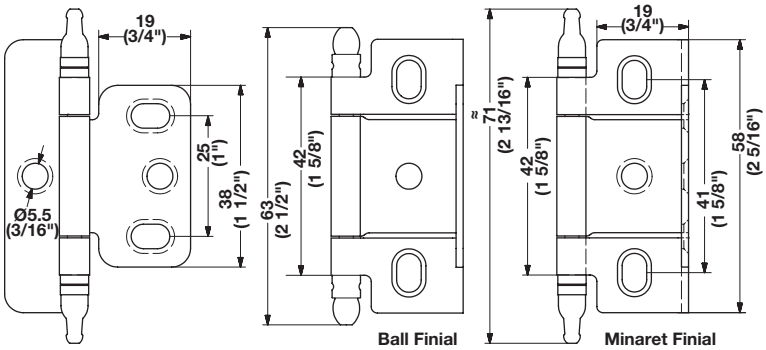

→ Flat Head Countersunk Wood Screws

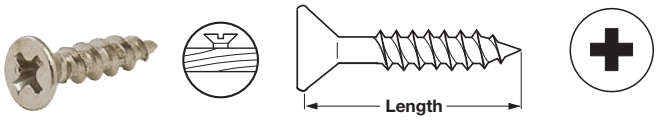

> Deep thread design provides maximum holding power in a variety of different woods and man-made materials
> With extra-deep Phillips Recess to help minimize bit slippage
> Material: Steel, plated

Finish	Length (inches)	Item No.
antique brass	#6 x 5/8"	010.77.146
oil-rubbed bronze	#6 x 5/8"	010.77.546
copper bronze	#6 x 5/8"	010.77.046
polished chrome	#6 x 5/8"	010.77.246
black	#6 x 5/8"	010.77.346
satin chrome	#6 x 5/8"	010.77.446
satin nickel	#6 x 5/8"	010.77.646
polished brass	#6 x 5/8"	010.77.846
pewter	#6 x 5/8"	010.77.946

Supplied With
1000 pcs.

Dimensional data not binding. Dimensions in mm, inches are approximate. We reserve the right to alter specifications without notice.

> For inset face frame doors
> Quick and easy mounting
> 2-way adjustable

→ Partial Wrap Non-mortise Hinges

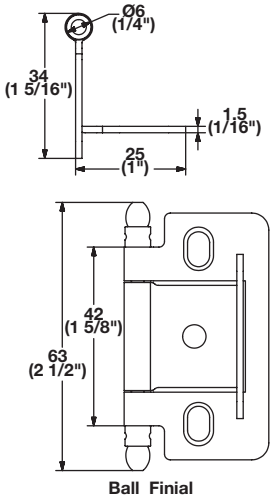

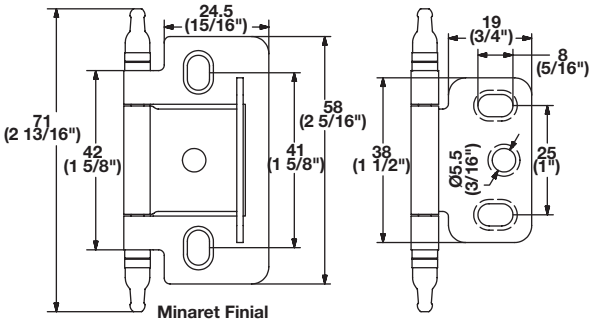

> Material: Steel

Finish	Minaret finial	Ball finial
antique brass	351.86.120	351.86.160
dark oil-rubbed bronze	351.86.130	351.86.170
copper bronze	351.86.190	351.86.195
chrome-plated	351.86.210	351.86.230
black	351.86.310	351.86.330
satin chrome	351.86.410	351.86.430
matt nickel	351.86.610	351.86.630
brass-plated	351.86.810	351.86.830
pewter	351.86.910	351.86.930

Note
Order #6 wood screws separately.

→ Flat Head Countersunk Wood Screws

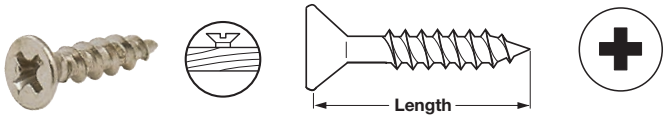

> Deep thread design provides maximum holding power in a variety of different woods and man-made materials
> With extra-deep Phillips Recess to help minimize bit slippage
> Material: Steel, plated

Finish	Length	Item No.
antique brass	#6 x 5/8"	010.77.146
oil-rubbed bronze	#6 x 5/8"	010.77.546
copper bronze	#6 x 5/8"	010.77.046
polished chrome	#6 x 5/8"	010.77.246
black	#6 x 5/8"	010.77.346
satin chrome	#6 x 5/8"	010.77.446
satin nickel	#6 x 5/8"	010.77.646
polished brass	#6 x 5/8"	010.77.846
pewter	#6 x 5/8"	010.77.946

Supplied With
1000 pcs.

Dimensional data not binding. Dimensions in mm, inches are approximate. We reserve the right to alter specifications without notice.

> For inset face frame doors
> Quick and easy mounting
> 2-way adjustable

→ Non-mortised Hinges

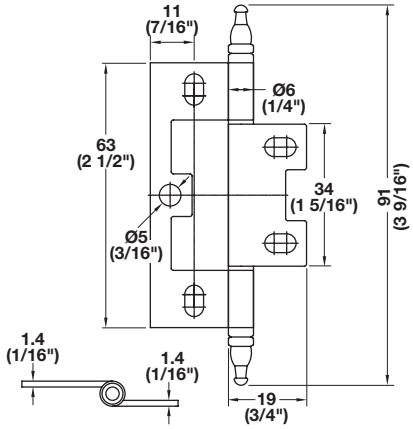

> With minaret finial
> Material: Steel

Finish	Item No.
antique brass	351.95.170
brass-plated	351.95.570
satin chrome	351.95.470
matt nickel	351.95.670
pewter	351.95.970
chrome-plated	351.95.270
black	351.95.370
dark oil-rubbed bronze	351.95.175

Note
Order #5 wood screws separately, below.

→ Mortised Hinges

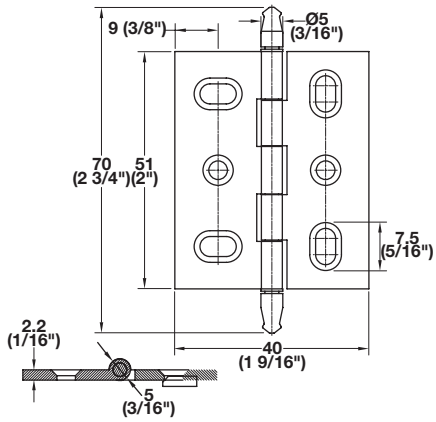

> With minaret finial
> Solid brass
> Material: Brass

Finish	Item No.
antique brass	354.22.131
polished brass	354.22.831
satin chrome	354.22.431
brushed-nickel	354.22.631
pewter	354.22.931
polished chrome	354.22.231
black	354.22.331
dark oil-rubbed bronze	354.22.141

Note
Order #6 wood screws separately, below.

→ Flat Head Countersunk Wood Screws

> Deep thread design provides maximum holding power in a variety of different woods and man-made materials
> With extra-deep Phillips Recess to help minimize bit slippage
> Material: Steel, plated

Finish	Length	Item No.	Length	Item No.
antique brass	#5 x 5/8"	010.77.136	#6 x 5/8"	010.77.146
oil-rubbed bronze	#5 x 5/8"	010.77.536	#6 x 5/8"	010.77.546
polished chrome	#5 x 5/8"	010.77.236	#6 x 5/8"	010.77.246
black	#5 x 5/8"	010.77.336	#6 x 5/8"	010.77.346
satin chrome	#5 x 5/8"	010.77.436	#6 x 5/8"	010.77.446
satin nickel	#5 x 5/8"	010.77.636	#6 x 5/8"	010.77.646
polished brass	#5 x 5/8"	010.77.836	#6 x 5/8"	010.77.846
pewter	#5 x 5/8"	010.77.936	#6 x 5/8"	010.77.946

Supplied With
1000 pcs.

Dimensional data not binding. Dimensions in mm, inches are approximate. We reserve the right to alter specifications without notice.

- > Hinges are post-plated and free of machine oil
- > Stainless steel is 304 grade with a bright annealed (BA) finish
- > BA finish provides a shiny, more decorative look
- > All holes are countersunk for screws
- > Hinges can be cut by the customer to desired length
- > For furniture, cabinetry and marine applications
- > Knuckle length: 12.7 mm (1/2")
- > Hole spacing: 50 mm (2")
- > Length: 1828.8 mm (72")

Note
Special order hinges are available in a minimum quantity of 300' (steel) and 150' (stainless steel).

→ Piano Hinges

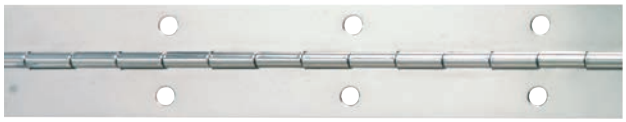

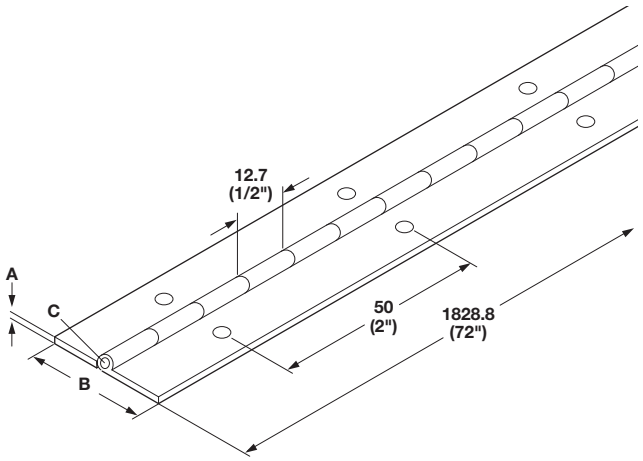

Material	Finish	Open Width (B)	Gauge (A)	Pin Diameter (C)	Item No.
Steel	polished nickel	27 (1 1/16")	1.02 (.04")	2.29 (.09")	351.09.614
Steel	polished nickel	31.8 (1 1/4")	1.02 (.04")	2.29 (.09")	351.09.623
Stainless Steel	stainless steel	31.8 (1 1/4")	.94 (.037")	2.54 (.1")	351.10.023
Steel	polished brass	38.1 (1 1/2")	1.02 (.04")	2.29 (.09")	351.09.533
Steel	polished nickel	38.1 (1 1/2")	1.02 (.04")	2.29 (.09")	351.09.633
Stainless Steel	stainless steel	38.1 (1 1/2")	.94 (.037")	2.54 (.1")	351.10.035
Steel	polished nickel	50.8 (2")	1.02 (.04")	2.29 (.09")	351.09.644
Stainless Steel	stainless steel	50.8 (2")	.94 (.037")	2.54 (.1")	351.10.043

Supplied With
5 pcs.
Screws

Dimensional data not binding. Dimensions in mm, inches are approximate. We reserve the right to alter specifications without notice.

→ Hinges with Fixed Pin

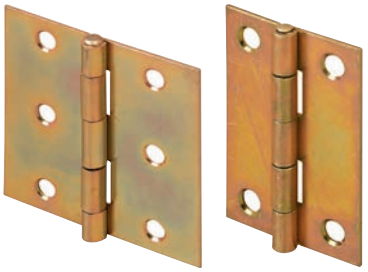

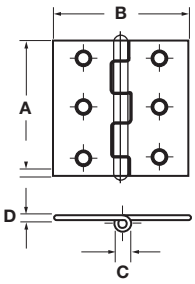

> 5 knuckles
> Knuckles Ø: 5.5 mm (1/4") approximately
> Material: Steel; Finish: yellow chromated

A x B (approx.)	Material thickness (D)	Holes per wing	Item No.
50 x 35 (1 15/16" x 1 3/8")	1.2	2	354.12.905
50 x 50 (1 15/16" x 1 15/16")	1.0	3	354.12.906

→ Cranked Hinge

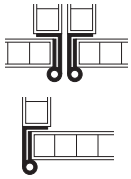

> Butting for front-hung doors
> Door thickness: 20–21 mm (25/32"–7/8")
> Side panel thickness: optional
> Barrel length: 50 mm (2")
> Material: Solid Brass

Finish	Left	Right
nickel-plated matt	307.01.636	307.01.627

→ Neuform Cranked Hinge

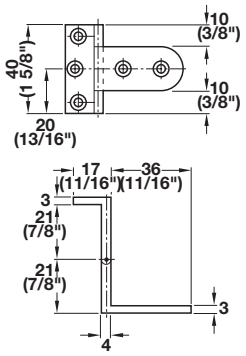

> Butt hinge for overlay doors
> Door thickness: 19–20 mm (3/4"–13/16")
> Side panel thickness: from 17 mm (11/16")
> Barrel length: 40 mm (1 9/16")
> Material: Solid Brass

Finish	Item No.
nickel-plated polised	307.04.708

Flat head screws	pages 12.7-12.8, 12.10, 12.13
Flat head wood screws	page 12.13

Dimensional data not binding. Dimensions in mm, inches are approximate. We reserve the right to alter specifications without notice.

→ Simplex-wood Door Hinge

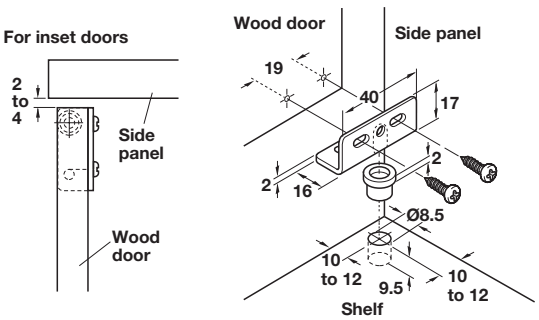

> With press-fit bushing
> Door thickness: 14–19 mm (9/16"–3/4")
> Material: Steel; Bushing: Plastic; Color: black

Finish	Item No.
chrome-plated	361.42.293
black	361.42.391

Supplied With
Bushings
Screws

Note
Dimensions shown on mounting diagrams are only approximate.
Please conduct trial mounting to determine your exact dimensions.

→ Pivot Hinge

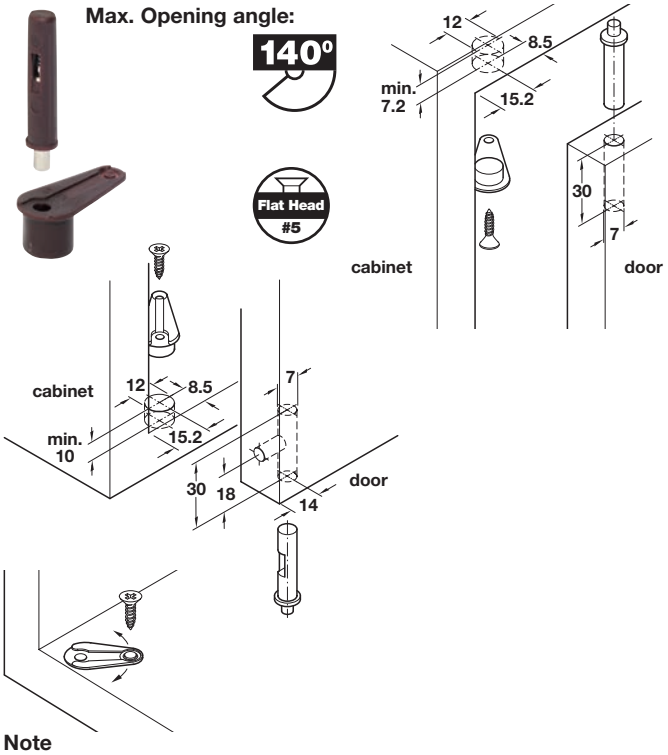

> Door thickness: 2–21 mm (1/16"–13/16")
> Both pins spring-loaded: no tools required for installation
> Detachable
> Material: Plastic; Pivot: Steel

Color	Item No.
black	361.22.310

Supplied With
2 Pins
2 Bushings

Note
To increase or reduce gap, turn tab on its pivot bearing. Once adjusted as desired, secure tab in position using a small wood screw as shown.

Note
To detach door, insert a small screwdriver into hole located in door edge. Then, use screwdriver to lift spring-loaded pin inside lower bushing. **Important:** make sure to match holes in door and bushing.

Flat head screws pages 12.7-12.8, 12.10, 12.13

Dimensional data not binding. Dimensions in mm, inches are approximate. We reserve the right to alter specifications without notice.

Pivot Hinges

→ Corner Pivot Hinge, straight

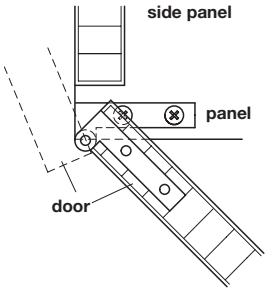

Opening angle: 250°

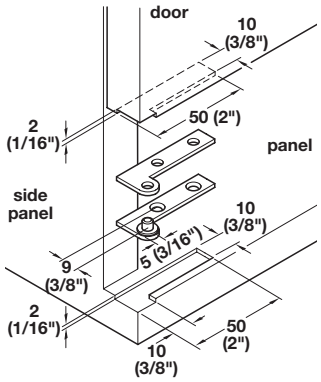

> Screw mounted
> Without stop
> With outer knuckle
> Length: 50 mm (1 15/16")
> Material: Brass, polished

Item No.
362.10.803

→ Desk Pivot Hinge

Opening angle: 90°

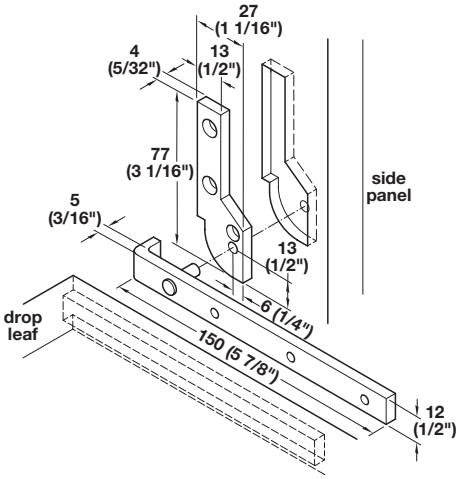

> Screw mounted on drop leaves
> With stop
> Length: 150 mm (5 7/8")
> Material: Brass, polished

Item No.
361.50.820

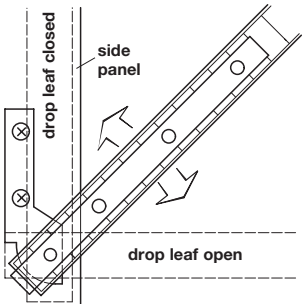

Flat head screws pages 12.7-12.8, 12.10, 12.13

Dimensional data not binding. Dimensions in mm, inches are approximate. We reserve the right to alter specifications without notice.

Miter Hinges

> Three-way adjustable:
Height: 3 mm (1/8")
Depth and side: 1.5 mm (1/32")
> Material: Cup: Zinc die-cast;
Hinge arm: Steel; Finish: nickel-plated

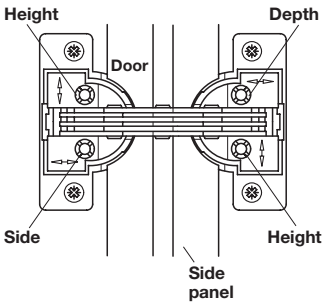

→ GS 45/90 Miter Hinge

Opening angle: 135°

Door
Side panel

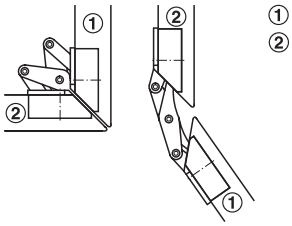

Hole pattern

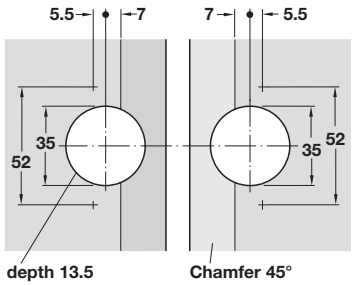

Flat Head #6

> Screw mounted
> Chamfer: 45°
> Door thickness: 16–22 mm (5/8"–7/8")
> Side panel thickness: 16–20 mm (5/8"–7/8")

	Item No.
	325.00.708

→ Miter Flap Hinge

Opening angle: 90°

Flat Head #6

Hole pattern

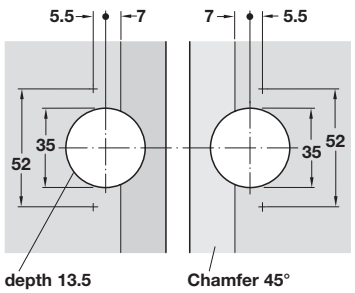

> Screw mounted
> Chamfer: 45°
> Flap thickness: 16–22 mm (5/8"–7/8")
> Side panel thickness: 16–22 mm (5/8"–7/8")
> Use in combination with flap and lid stays

	Item No.
	325.02.702

Flat head screws pages 12.7-12.8, 12.10, 12.13

Dimensional data not binding. Dimensions in mm, inches are approximate. We reserve the right to alter specifications without notice.

Hinges

→ Self-supporting Hinge

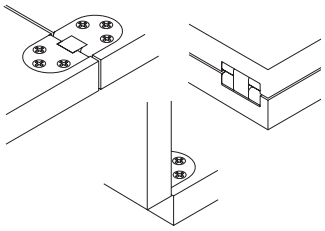

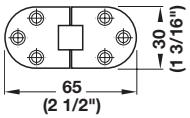

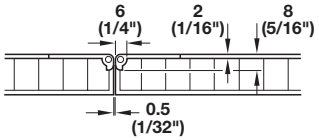

> Flush mounted
> For folding and sewing machine tables
> Material: Brass

Finish	Item No.
nickel-plated, polished	341.32.708
matt brass	341.32.502
polished brass	341.32.806
bronzed	341.32.100

→ Folding Table Hinge

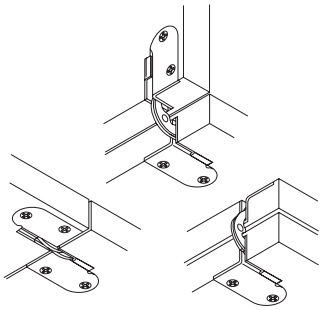

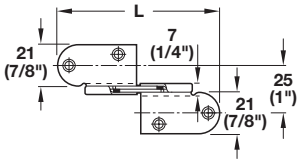

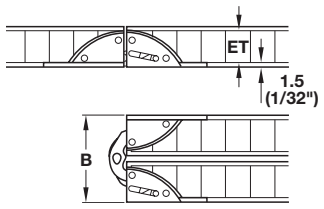

> Flush mounted
> For panel thickness: 19–22 mm (3/4"–7/8") internal hinge
> Distance between panels: approximately 5 mm (3/16")
> Material: Steel, galvanized

Finish	Material thickness	Mortise depth ET	L x B	Item No.
blue	19 (3/4")	16 (5/8")	85 x 47 (3 3/8" x 1 7/8")	341.30.509
yellow	22 (7/8")	19 (3/4')	85 x 51 (3 3/8" x 2")	341.30.526

Flat head screws pages 12.7-12.8, 12.10, 12.13

Dimensional data not binding. Dimensions in mm, inches are approximate. We reserve the right to alter specifications without notice.

Grass Tiomos 90° Hinge

> Sleek modern design
> For flap thickness: up to 30 mm (1 3/16")
> Narrow joint
> Large overlay: up to 19 mm (3/4")
> 3-dimensional adjustment
> Compatible with Tipmatic pin system
> Screw mounted

Opening angle: 90°

→ Hinge

> For flap thickness: 14–21 mm (9/16"–13/16")
> Cup depth: 12 mm (3/8")
> Material: Zinc die-cast

Finish	Item No.
nickel-plated	342.71.700
night	342.71.300

→ Cover Cap

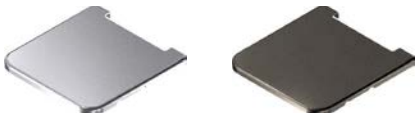

> Material: Steel

Finish	Item No.
nickel-plated	342.71.710
night	342.71.310

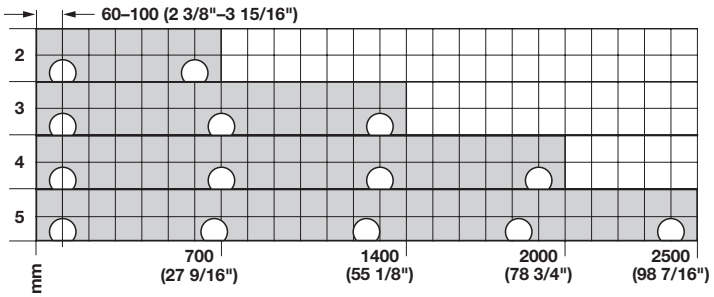

→ Spacer

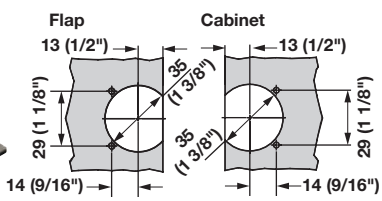

> 1.5 mm (1/16")

Finish	Item No.
nickel-plated	342.71.720
night	342.71.320

Dimensional data not binding. Dimensions in mm, inches are approximate. We reserve the right to alter specifications without notice.

Grass Tiomos 90° Hinge

Overlay, without spacer, 12 mm (1/2") cup depth

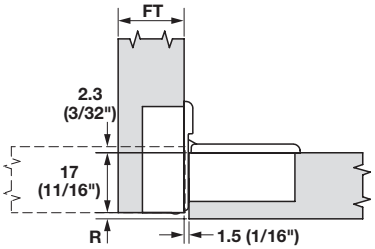

Overlay, with 1spacer, 12 mm (1/2") cup depth

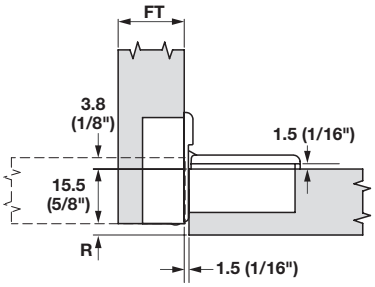

Overlay, with 2 spacers, 12 mm (1/2") cup depth

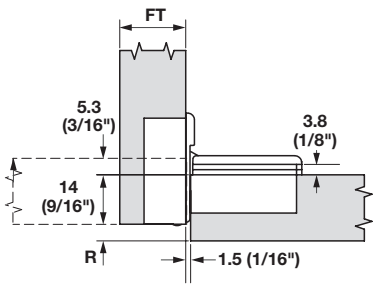

Flap thickness (FT)

Min. Reveal (R)	21 (13/16")	20 (13/16")	19 (3/4")	18 (11/16")	17 (11/16")	16 (5/8")	15 (9/16")	14 (9/16")
	2.5 (1/8")	1.5 (1/16")	1 (1/16")	1 (1/16")	1 (1/16")	1 (1/16")	1 (1/16")	1 (1/16")

Overlay, without spacer, 12 mm (1/2") cup depth

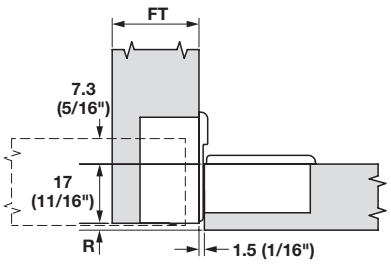

Overlay, with 1 spacer, 12 mm (1/2") cup depth

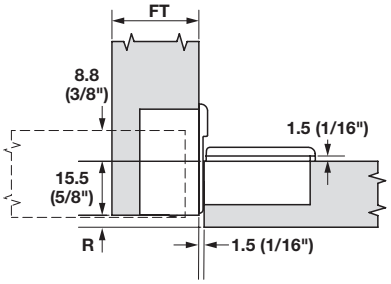

Overlay, with 2 spacers, 12 mm (1/2") cup depth

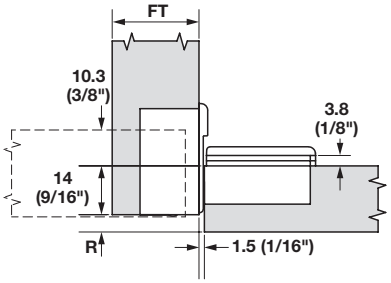

Flap thickness (FT)

Min. Reveal (R)	30 (1 3/16")	29 (1 1/8")	28 (1 1/8")	27 (1 1/16")	26 (1")	25 (1")	24 (15/16")	23 (7/8")	22 (7/8")
	6.5 (1/4")	5.5 (3/16")	4.5 (3/16")	3.5 (1/8")	2.5 (1/8")	1.5 (1/16")	1 (1/16")	1 (1/16")	1 (1/16")

Note: Hinge dimensions and reveal calculation based on factory setting.

IMPORTANT
To determine the correct application we strongly recommend a trial mounting for all hinges and base plates.

Overlay Adjustment

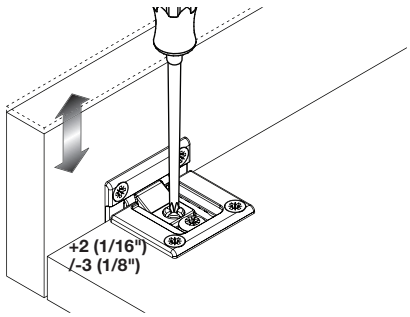

Side Adjustment

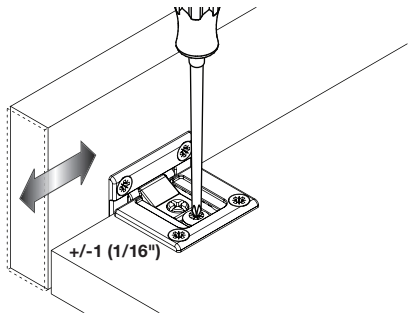

Depth Adjustment

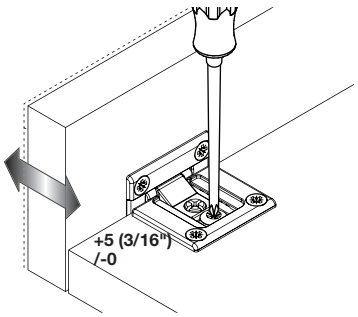

Cup dimensions, 12 mm (1/2") cup depth

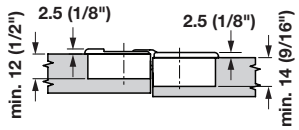

Hinge dimension, 12 mm (1/2") cup depth

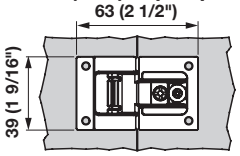

Cup dimensions, 17 mm (11/16") cup depth

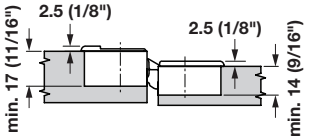

Hinge dimensions, 17 mm (11/16") cup depth

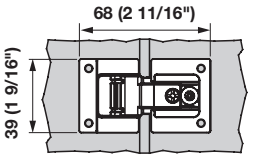

Dimensional data not binding. Dimensions in mm, inches are approximate. We reserve the right to alter specifications without notice.

In-Side Flap Hinge

> For doors designed to be mounted both recessed by milling the furniture side panel and internally by mounting with screws

→ Hinge

> Door thickness: 18–20 mm (11/16"–3/4")
> Horizontal, vertical and front adjustment
> Material: Steel; Finish: nickel-plated

Handing	Item No.
Right	342.78.722
Left	342.78.723

→ Cover Caps

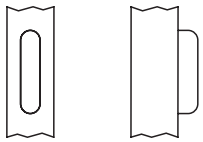

Recessed or external assembly

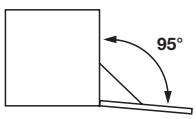

Door opening angle 95°

> Material: Plastic

Color	Handing	Item No.
white	right	342.78.728
	left	342.78.729
black	right	342.78.328
	left	342.78.329
gray	right	342.78.528
	left	342.78.529

→ Hinge

Door Gap (T)

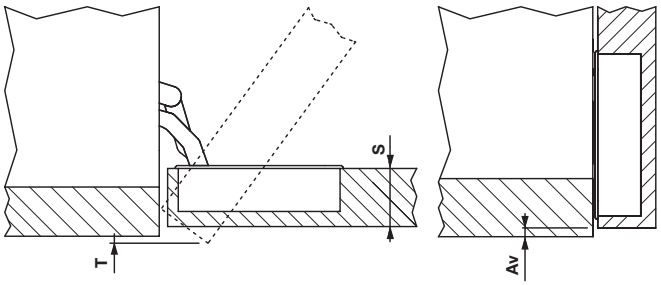

Standard thickness

Av\S	22	25	28	40
1	1	2.5	4.5	6.5
1.5	1	2	4	6
2	–	2	4	6
2.5	–	1.5	3.5	5.5
3	–	1	3	5
4	–	–	3	4
5	–	–	1	3

Dimensional data not binding. Dimensions in mm, inches are approximate. We reserve the right to alter specifications without notice.

In-Side Flap Hinge

Surface mounted

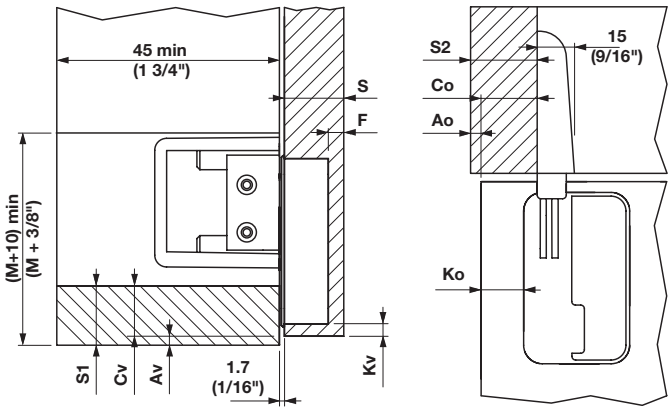

Recessed

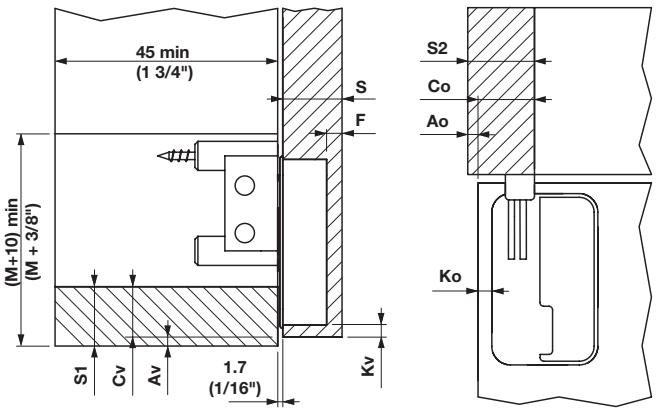

Standard thickness

Av = vertical reveal
Ao = horizontal reveal
Cv = vertical door overlay
Co = horizontal door overlay
F = door bottom - box bottom distance
Kv = door panel - box hole distance
Ko = side door panel - box hole distance
S = door thickness
S1 = base thickness
S2 = side panel thickness
T = door gap
Kv = (M - 55) - Av
Ko = Co - 13.5
F = S - 15
If Ko<3 or F<3 check the viability due to the material

→ Adjustments

Horizontal and vertical adjustment

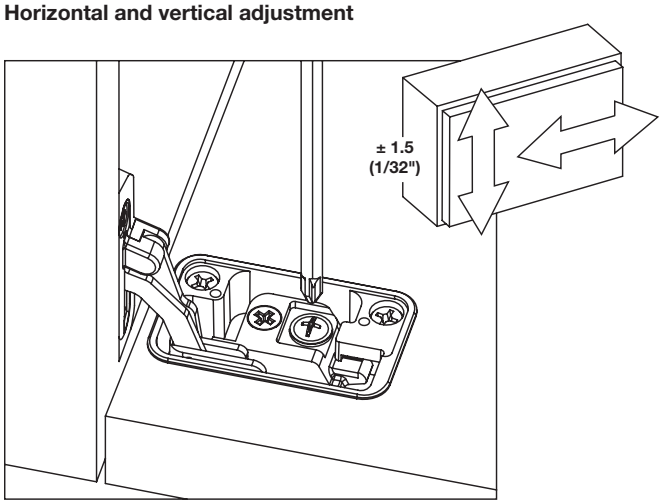

Door front angle adjustment

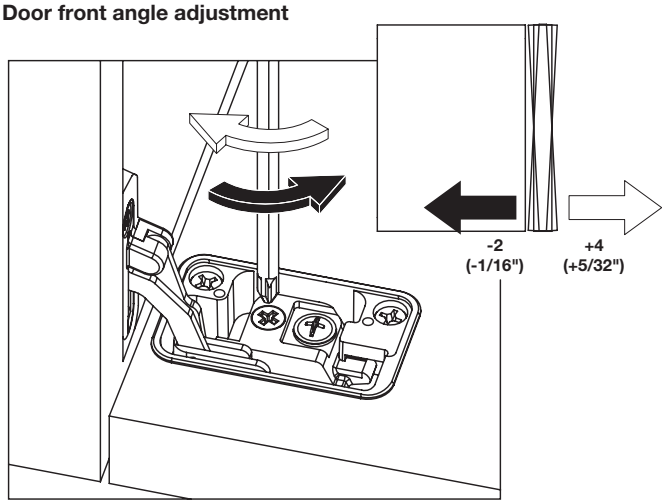

Dimensional data not binding. Dimensions in mm, inches are approximate. We reserve the right to alter specifications without notice.

Concealed Hinge

→ Hinge

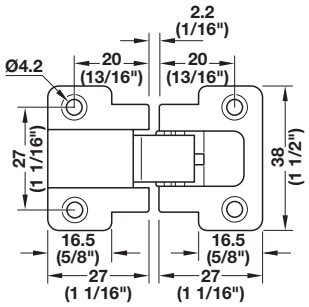

> 3-D adjustable
> Cup Ø: 26 mm (1")
> Negative tab drilling
> For panel thickness: from 18 mm (11/16")
> Overlay: 18.5 mm (3/4")
> Screw mounted
> Material: Zinc Alloy

Finish	Item No.
nickel-plated	342.78.700

Drilling pattern

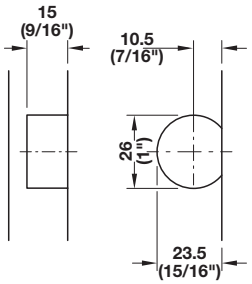

Drilling dimensions in base panel

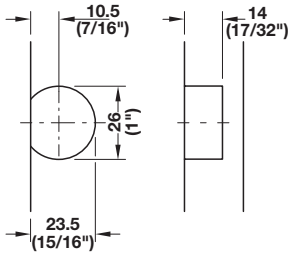

Drilling dimensions in door

Application and planning dimensions

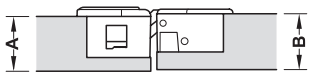

Door open

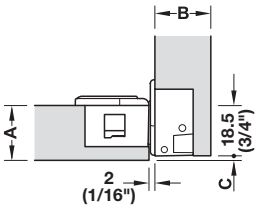

Door closed

Adjustment facility

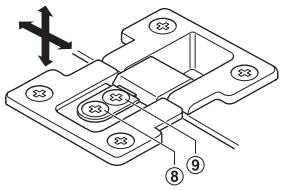

⑧ = height adjustment: +2 mm
⑨ = clamping screw
Side adjustment: ± 1 mm
Depth adjustment: ± 4 mm

Minimum gap C for door opening

Base panel thickness A	Door thickness B						
	18 (11/16")	19 (3/4")	20 (13/16")	22 (7/8")	24 (15/16")	25 (1")	26 (1 1/16")
18 (11/16")	0	0.7	1.7	3.7	5.7	6.7	7.7
19 (3/4")	0	0	0	2.7	4.7	5.7	6.7
20 (13/16")	0	0	0	1.7	3.7	4.7	5.7
22 (7/8")	0	0	0	0	1.7	2.7	3.7

→ Cover Cap

White

Black

> For hinge above
> Material: Plastic

Color	Item No.
white	342.78.709
black	342.78.309

Supplied With
4 cover caps for cup/4 cover caps for arm

Pan head screws pages 12.9-12.10

Dimensional data not binding. Dimensions in mm, inches are approximate. We reserve the right to alter specifications without notice.

Hinges

Opening angle: 90°

> Three-way adjustable and detachable
> The two cups can be released and detached for added shipping and installation convenience

→ Flap Hinge

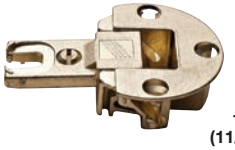

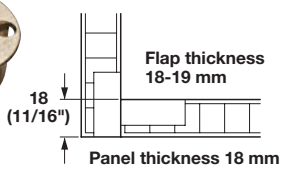

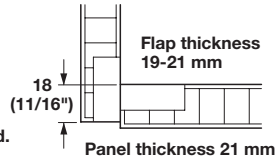

There is a 1 mm gap between flap and shelf when the flap is lowered.

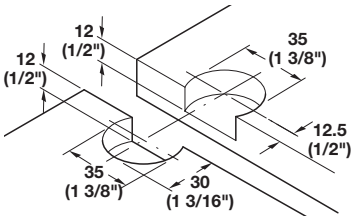

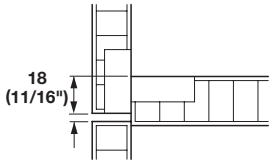

> All metal
> Material: Zinc die-cast

Finish	Item No.
nickel-plated	342.66.709

Supplied With
Mounting screws

→ Plano Medial Flap Hinge

Hole pattern:

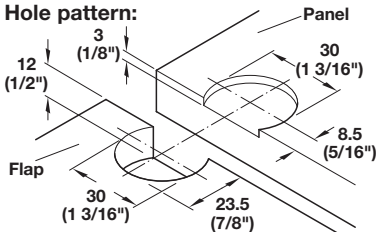

> Screw mounted
> No projecting parts on the cabinet or flap
> Material: Plastic/Zinc die-cast

Finish	Item No.
white/chrome-plated	342.75.226

Sample installations

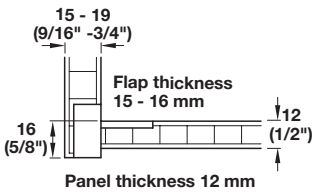

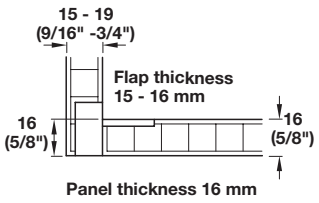

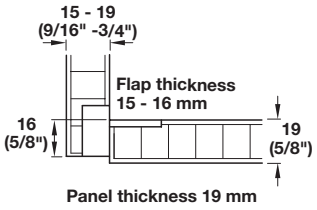

Flat head wood screws page 12.13

Dimensional data not binding. Dimensions in mm, inches are approximate. We reserve the right to alter specifications without notice.

Häfele Free Space

> Extremely powerful and versatile: the Free Space series can be used for a much wider range of applications – up to 80% of all flap applications!
> For wood or aluminum frame doors
> Extremely compact: modern design and Häfele engineered technology allow for more space inside a cabinet
> Door opening can be adjusted to open at 90° or 107° with integrated stop
> Fast simple installation: plugs into standard 32/37 mm line holes and fastens with one pre-mounted screw
> Intuitive 3D door alignment and closing adjustment
> Additional hinges and cover caps are not required

Extremely powerful

Less models for more applications

Example: A door height of 400 mm (16") can accommodate a door weight up to 10 kg (23 lbs.)

Extremely fast

Fewer manual operations for easier installation

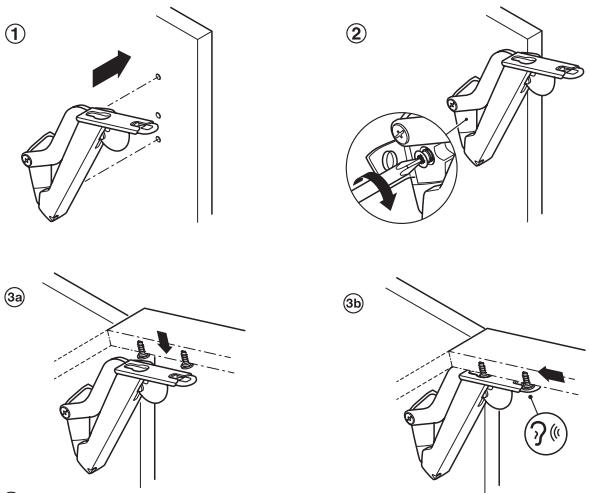

① Press fitting into pre-drilled side panel
② Tighten pre-mounted Euro screw
③ Fit the front panel to the lever arms ③a and slide on until it egages ③b

Extremely compact

Less installation depth means more storage space

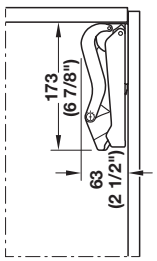

> Required internal installation depth: only 63 mm (2 1/2")
> Required internal installation height: only 173 mm (6 7/8")

Extremely easy

Scan for questions during installation

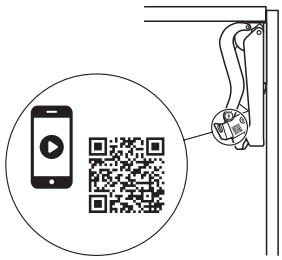

Extremely adaptable

Design freedom from a single program

Dimensional data not binding. Dimensions in mm, inches are approximate. We reserve the right to alter specifications without notice.

Häfele Free Space

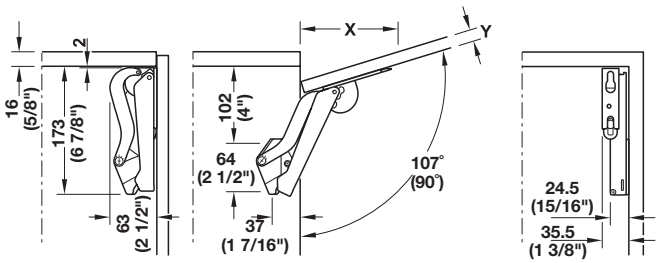

Front panel thickness Y	16 (5/8")	19 (3/4")	22 (7/8")	26 (1")
Distance X (with cabinet top panel thickness 16 mm (5/8")	117 (4 5/8")	107 (4 1/4")	96 (3 7/8")	83 (3 1/4")

Note Dim X helps calculate space required when raised panels or crown moldings are used.

Measurements table for selecting the right model based on cabinet height and door weight including weight of handle
We recommend ordering the stronger fitting model if in doubt.

Model	Door Weight Ranges in Pounds									
	B		C		D		E		F	
Door Height	Min	Max	Min	Max	Min	Max	Min	Max	Min	Max
225 (9")	5.1	9.5	8.4	15.6	14.1	20.5	20.2	29.5	29.5	42.0
250 (10")	4.2	8.6	7.5	14.1	12.8	20.0	18.3	27.7	26.6	37.8
275 (11")	4.2	7.7	6.8	12.8	11.7	18.0	16.5	26.4	24.2	34.3
300 (12")	3.7	7.0	6.2	11.7	10.6	16.5	15.2	24.2	22.2	31.5
325 (13")	3.5	6.6	5.7	10.8	9.7	15.4	14.1	22.4	20.5	29.0
350 (14")	3.3	6.2	5.3	10.1	9.0	14.3	13.0	20.9	18.9	27.1
375 (15")	2.9	5.7	4.8	9.5	8.4	13.2	12.1	19.4	17.8	25.1
400 (16")	2.6	5.3	4.6	8.8	7.9	12.3	11.4	18.3	16.7	23.5
425 (17")	2.4	5.1	4.4	8.4	7.5	11.7	10.8	17.2	15.6	22.2
450 (18")	2.2	4.6	4.2	7.7	7.0	11.0	10.1	16.1	14.7	20.9
475 (19")	2.2	4.4	4.0	7.5	6.6	10.3	9.5	15.4	14.1	19.8
500 (20")	2.0	4.2	3.7	7.0	6.4	9.9	9.0	14.5	13.2	18.9
525 (21")	2.0	4.0	3.5	6.6	5.9	9.5	8.6	13.9	12.5	18.0
550 (22")	1.8	3.7	3.3	6.4	5.7	9.0	8.1	13.2	12.1	17.2
575 (23")	1.8	3.7	3.1	6.2	5.5	8.6	7.9	12.5	11.4	16.3
600 (24")	1.8	3.5	3.1	5.9	5.3	8.1	7.5	12.1	11.0	15.6
625 (25")	1.5	3.3	2.9	5.5	5.1	7.9	7.3	11.7	10.6	15.0
650 (26")	1.5	3.3	2.9	5.3	4.8	7.7	7.0	11.2	10.1	14.5

Order suitable screw set for aluminum frame doors, to the right.

→ Free Space 1.11

> For standard applications with handle
> For front height up to 650 mm (26")
> Height/side/tilting angle and holding power
> Screw mounts with pre-mounted Euro screw, front panel mounts without tools or slides onto pre-mounted screws
> Max. door overlay: 90° opening: 37 mm (1 1/4")
107° opening: 22 mm (7/8")
> Material: Housing: Plastic: Mounting Bracket and Support Lever: Steel; Finish: nickel-plated

Model	light gray	white	anthracite
B	372.27.500	372.27.700	372.27.350
C	372.27.501	372.27.701	372.27.351
D	372.27.502	372.27.702	372.27.352
E	372.27.503	372.27.703	372.27.353
F	372.27.504	372.27.704	372.27.354

Supplied With
2 Fittings (right/left)
4 Mounting screws for front panel
1 Set mounting instructions and drilling template

Note
The choice of fitting depends on the cabinet height and door weight to include weight of handle.

→ Screw for aluminum frame doors

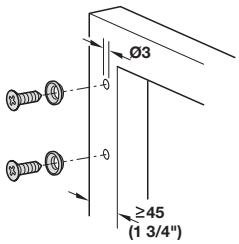

> For connecting aluminum frame front panels with frame widths from 45 mm (1 3/4")
> Material: Steel

Finish	Item No.
nickel-plated	372.27.600

Supplied With
4 screws and collar rings

→ Free Space Drilling Jig

> For pilot drilling the cabinet side panels and door panel
> Material: Plastic; Drilling Sleeves: Steel

	Item No.
	372.27.602

Note
For drilling patterns, please see Free Space installation instructions.

Dimensional data not binding. Dimensions in mm, inches are approximate. We reserve the right to alter specifications without notice.

Häfele Free Space

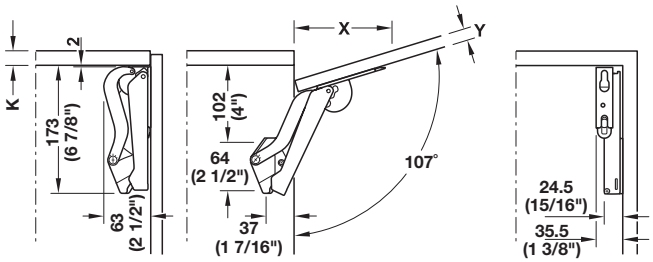

→ Free Space 1.8 Push to Open

> For doors without handle
> For door heights: up to 650 mm (26")
> Height/side/tilting angle and holding power
> Max. door overlay: 90° opening: 37 mm (1 1/4")
107° opening: 22 mm (7/8")
> Screw mounts with pre-mounted euro screw, door panel mounts without tools and slides onto pre-mounted screws
> Material: Housing: Plastic: Mounting Bracket and Support Lever: Steel; Finish: nickel-plated

Model	white	light gray	anthracite
B	372.27.705	372.27.505	372.27.355
C	372.27.706	372.27.506	372.27.356
D	372.27.707	372.27.507	372.27.357
E	372.27.708	372.27.508	372.27.358

Supplied With
Fitting set (1 pc. each left/right)
4 Fixing screws for front panel
Free push catch
Installation instructions with paper drilling template for side panel

Note
The choice of fitting depends on the cabinet height and door weight.

We recommend ordering the stronger fitting model if in doubt.
Please order screw set 372.27.600 for aluminum frame front panels with frame width from 45 mm (1 3/4").

Front panel thickness Y	16 (5/8")	19 (3/4")	22 (7/8")	26 (1")
Distance X (with cabinet top panel thickness 16 mm (5/8")	117 (4 5/8")	107 (4 1/4")	96 (3 7/8")	83 (3 1/4")

Note Dim X helps calculate space required when raised panels or crown moldings are used.

Measurements table for selecting the right model based on cabinet height and door weight including weight of handle
We recommend ordering the stronger fitting model if in doubt.

Model	Door Weight Ranges in Pounds							
	B		C		D		E	
Door Height	Min	Max	Min	Max	Min	Max	Min	Max
225 (9")	5.1	9.5	8.4	15.6	14.1	20.5	20.2	29.5
250 (10")	4.2	8.6	7.5	14.1	12.8	20.0	18.3	27.7
275 (11")	4.2	7.7	6.8	12.8	11.7	18.0	16.5	26.4
300 (12")	3.7	7.0	6.2	11.7	10.6	16.5	15.2	24.2
325 (13")	3.5	6.6	5.7	10.8	9.7	15.4	14.1	22.4
350 (14")	3.3	6.2	5.3	10.1	9.0	14.3	13.0	20.9
375 (15")	2.9	5.7	4.8	9.5	8.4	13.2	12.1	19.4
400 (16")	2.6	5.3	4.6	8.8	7.9	12.3	11.4	18.3
425 (17")	2.4	5.1	4.4	8.4	7.5	11.7	10.8	17.2
450 (18")	2.2	4.6	4.2	7.7	7.0	11.0	10.1	16.1
475 (19")	2.2	4.4	4.0	7.5	6.6	10.3	9.5	15.4
500 (20")	2.0	4.2	3.7	7.0	6.4	9.9	9.0	14.5
525 (21")	2.0	4.0	3.5	6.6	5.9	9.5	8.6	13.9
550 (22")	1.8	3.7	3.3	6.4	5.7	9.0	8.1	13.2
575 (23")	1.8	3.7	3.1	6.2	5.5	8.6	7.9	12.5
600 (24")	1.8	3.5	3.1	5.9	5.3	8.1	7.5	12.1
625 (25")	1.5	3.3	2.9	5.5	5.1	7.9	7.3	11.7
650 (26")	1.5	3.3	2.9	5.3	4.8	7.7	7.0	11.2

Order suitable screw set for aluminum frame doors, previous page.

Dimensional data not binding. Dimensions in mm, inches are approximate. We reserve the right to alter specifications without notice.

Häfele Free Space

Example: A door height of 400 mm (16") can accommodate a door weight up to 22.5 kg (50 lbs.)

Measurements table for selecting the right model based on cabinet height and door weight including weight of handle.
We recommend ordering the stronger fitting model if in doubt.

Door Weight Ranges in Pounds				
Model	**G**		**H**	
Door Height	Min	Max	Min	Max
350 (14")	26	42	40	57
375 (15")	24	39	37	53
400 (16")	22	36	35	50
425 (17")	21	34	33	47
450 (18")	20	32	31	44
475 (19")	19	31	29	42
500 (20")	18	29	28	40
525 (21")	17	28	26	38
550 (22")	16	26	25	36
575 (23")	16	25	24	35
600 (24")	15	24	23	33
625 (25")	14	23	22	32
650 (26")	14	22	21	30

→ Free Space 6.15 - Heavy Duty

> For standard applications, doors with handles
> Not applicable for aluminum framed doors
> For door heights: max. 650 mm (26")
> The fitting mounts to the side panels with a single pre-mounted Euro screw
> The door mounts without tools and slides onto the front fixing plates
> Use a Pozi drive #2 for all screw installations
> Door overlay max.: 90° opening: 37 mm (1 1/4")
107° opening: 22 mm (7/8")
> Material: Plastic/Steel; Steel finish: nickel-plated

Model	light gray	white	anthracite
G	372.27.521	372.27.721	372.27.321
H	372.27.522	372.27.722	372.27.322

Supplied With
2 Fittings (right/left)
2 Front fixing brackets with pre-mounted screws
1 Set mounting instructions and paper drilling template

Note
Selecting the correct model depends on door height and then door weight which should also consider the weight of the handle.

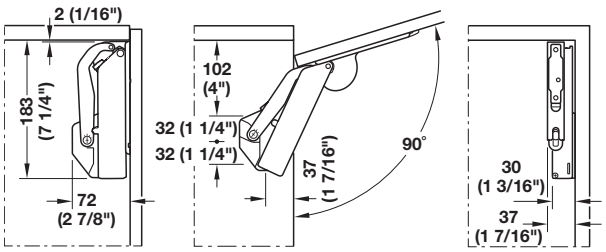

> Required installation depth: only 72 mm (2 7/8")
> Required installation height: only 183 mm (7 1/4")

Additional Notes
The lever arms are spring loaded – Risk of injury and damage to the fitting! After mounting the arms, do not press them down in the open position until the counterweight of the door is mounted.

Please use a Pozi Drive #2 bit for all screw installations and adjustment features, otherwise damage to the screw head is likely.

Make sure that the Euro screws which attach the fittings to side panels are completely tight; drawing the fitting tight against the side wall.

For tension adjustment feature, we recommend using a cordless driver as these screws are geared very low; be sure to adjust both sides to the same tensioning position.

Dimensional data not binding. Dimensions in mm, inches are approximate. We reserve the right to alter specifications without notice.

This page is left blank intentionally.

Dimensional data not binding. Dimensions in mm, inches are approximate. We reserve the right to alter specifications without notice.

Häfele Free Accessories

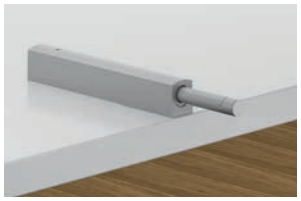

> For front panels without handles; Free Space 1.8 flap fitting, up to a max. width of 1.200 mm
> Push distance: approx. 2 mm (1/16")

→ Push Catches

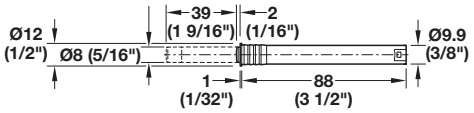

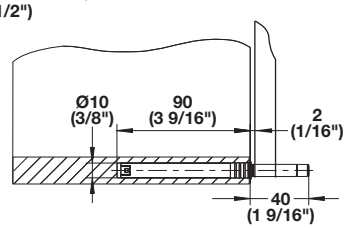

> For mounting into drilled hole, Ø10 x 90 mm (3/8" x 3 9/16") or sliding onto housing below
> Material: Plastic; Color: gray, RAL 7004

Model type	Color code	Force lbs.	Item No.
1	green	3.75–5 lbs.	372.91.470
2	yellow	4.85–7.5 lbs.	372.91.471
3	blue	5.75–10.5 lbs.	372.91.472

Note
Color code on bottom of housing indicates model type.

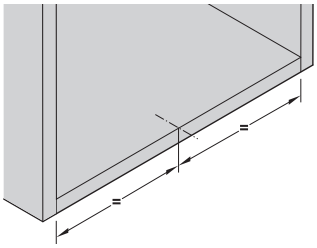

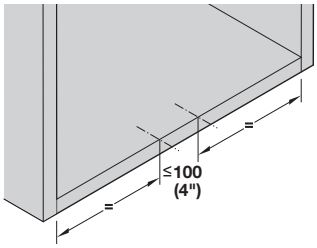

→ Housing - Surface Mount

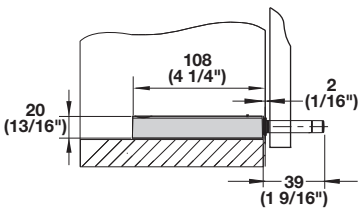

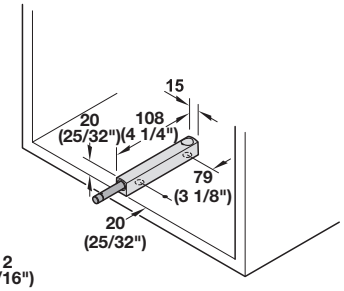

> Screw mounted
> Material: Plastic

Color	Item No.
gray RAL 7035	372.91.479

→ Drilling Jig

	Item No.
	001.25.080

→ Drill Bit for Jig

> Ø10 x 400 mm (3/8" x 15 3/4")

	Item No.
	001.20.351

Dimensional data not binding. Dimensions in mm, inches are approximate. We reserve the right to alter specifications without notice.

Häfele Free Flap H 1.5

- > For wood or aluminum framed doors
- > All common applications can be achieved by changing mounting position and combining with the appropriate accessories
- > Applications include fronts with and without handle, aluminum frame and all-glass fronts, automatic opening to the end position, multi-position stop and easy opening of heavy fronts
- > Can be used on one or both sides depending on door size
- > Holding power can be adjusted individually to respective door weight

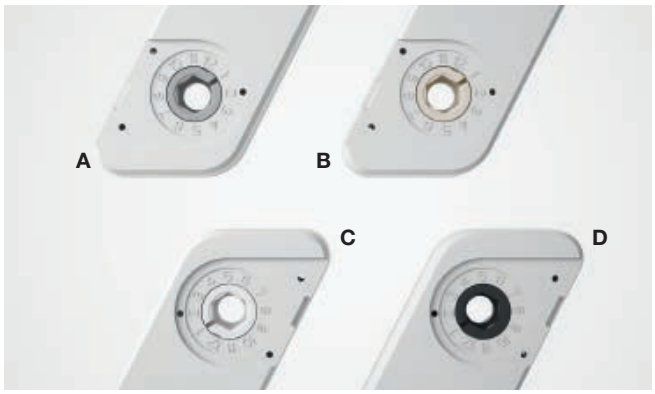

(Adjusting screw) for differentiating the models A, B, C and D.

Mounting

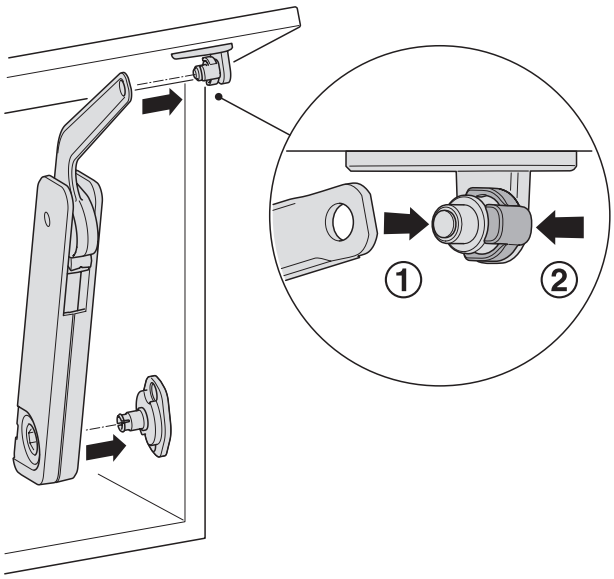

Quick and tool-less installation of the fitting onto pre-mounted screw mount brackets.

Holding power adjustment with SW10 Hex key.
(Item No. 235.79.301), see page **9.119**

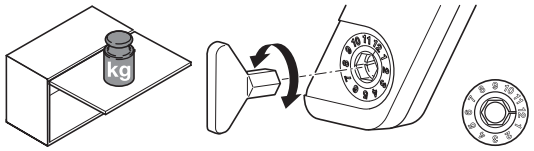

Note
Use position 1–8 for adjusting the holding power.
Use position 9–12 to re-adjust flap (if necessary).

Front adjustment facility

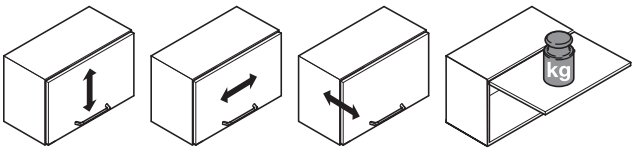

***Height adjustment** | ***Side adjustment** | ***Tilt adjustment** | **Holding power adjustment with SW10 Hex key,**

Note
*Depends on the hinges that are installed.

Dimensional data not binding. Dimensions in mm, inches are approximate. We reserve the right to alter specifications without notice.

Häfele Free Flap H 1.5

→ Applications

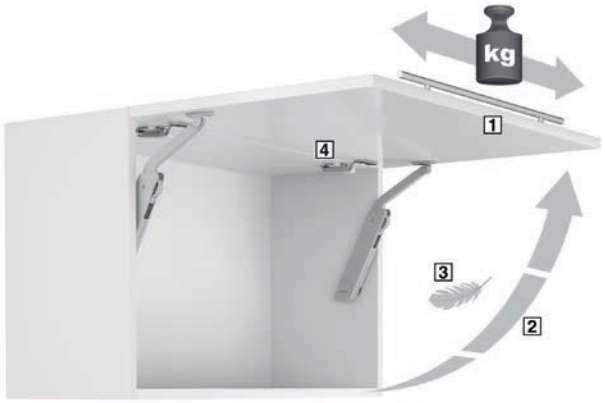

> For doors with handle

Power-Assisted Opening

1 For wide and heavy doors with handle.
2 Door is held reliably in any position.
3 Less manual force needed to open the door.
4 Application in combination with concealed hinges with or without integrated soft closing mechanism.

Application	page **9.107**
Fitting	page **9.110**
Accessories	page **9.110**

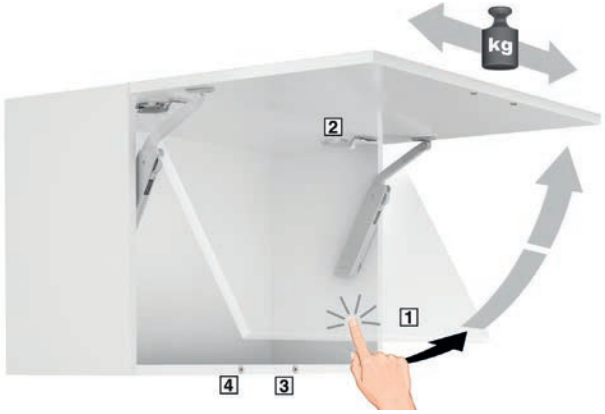

Touch-To-Open

> For opening the door slightly and with a multi-position stop

1 Slight pressure on the front opens the door slightly, then it can be opened and closed completely by hand. The front is held reliably in any position.
2 Application in combination with Salice Push concealed hinges.
3 Door is held closed by magnetic door catch and counter plate on the front panel.
4 Additional magnets for holding the door closed (optional).

Application	page **9.108**
Fitting	page **9.110**
Accessories for Push	page **9.110**

> For handle-free doors

Push-To-Open

> For automatic complete opening

1 Slight pressure on the front opens the door completely to the end position
2 Application in combination with Salice Push concealed hinges
3 Door is held closed by magnetic door catch and counter plate on the front panel
4 Additional magnets for holding the door closed (optional)

Application	page **9.109**
Fitting	page **9.110**
Accessories for Push	page **9.110**

Dimensional data not binding. Dimensions in mm, inches are approximate. We reserve the right to alter specifications without notice.

Häfele Free Flap H 1.5 with Handle

> For power-assisted opening of the door

Door height	Door weight lbs.		
	Model A	Model B	Model D
For opening angle 75°			
350 (14")	5.7–9.3	8.4–14.3	13.7–24
400 (16")	5.1–7.3	6.6–12.8	12.3–22.5
450 (18")	4.9–6.8	6–10.1	12.1–21.4
500 (20")	3.7–6.2	5.1–10.1	10.1–28.7
550 (22")	3.5–5.7	4.9–9.3	9–14.6
600 (24")	2.6–5.1	4.6–8.6	8.6–13.2
For opening angle 90°			
275 (11")	6.2–8.4	7.7–13.2	12.8–23.1
300 (12")	4.9–7.5	7.3–12.6	11.5–19.8
350 (14")	4.6–6.4	6–10.8	10.6–17.6
400 (16")	3.5–5.1	5.1–10.1	9.5–17.4
450 (18")	2.9–4.9	4.4–8.4	8.4–13.9
500 (20")	2.6–4.4	3.7–7.5	7.5–13.2
550 (22")	2.6–4.2	3.7–6.6	6.6–11.2
600 (24")	2–3.5	3.5–6.6	6.6–10.4
For opening angle 110°			
275 (11")	4.2–6.2	5.7–9.5	9.3–15.7
300 (12")	2.4–5.3	5.3–9	8.8–15.4
350 (14")	2.4–4.6	4.6–8.2	7.9–14.1
400 (16")	2.4–3.7	3.7–7.1	7.1–12.1
450 (18")	2.2–3.5	3.5–6.2	6.2–12.1
500 (20")	2.2–3.1	2.9–5.5	5.5–9.9
550 (22")	1.8–2.9	2.9–4.9	4.9–8.6
600 (24")	1.5–2.6	2.6–4.9	4.9–9.5

Note
The following dimensions and sample measurement tables must be strictly observed for this kind of application. Two Free Flap H 1.5 fittings must be installed for door widths from 600 mm (24") and above. The weight specification applies to one fitting. When using two fittings the door weight values double. Application in combination with concealed hinges with or without integrated soft closing.

Opening angle 75°

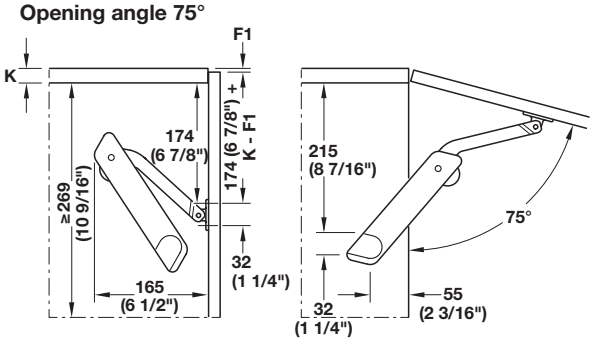

Opening angle 90°

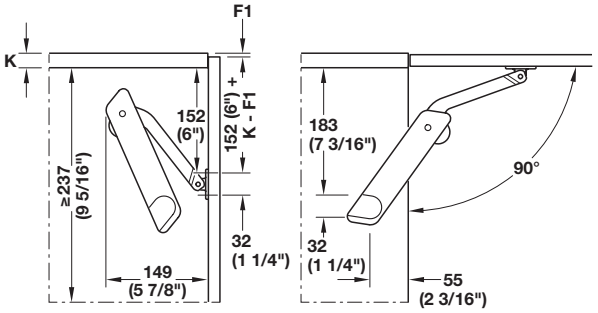

Opening angle 110°

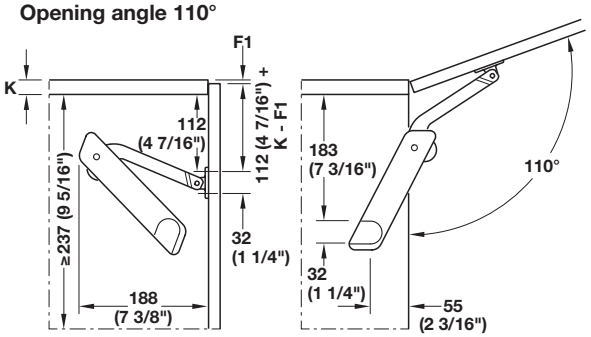

F1 > 2 mm (1/16")

Information	page 9.105
Complete set/individual fitting	page 9.110
Accessories/optional soft closing mechanism	page 9.110

Dimensional data not binding. Dimensions in mm, inches are approximate. We reserve the right to alter specifications without notice.

Häfele Free Flap H 1.5 Touch-to-open

> For opening the door slightly and with multi-position stop

Door height	Door weight lbs. Model B	Model C	Model D
For opening angle 75°			
350 (14")	10.1–11.7	–	–
400 (16")	7.1–10.6	9.5–15.4	12.1–17.6
450 (18")	5.5–8.8	8.8–13.9	11–16.8
500 (20")	4.9–7.7	7.7–11.9	10.4–16.1
550 (22")	4.4–7.3	5.7–11.2	8.8–15.2
600 (24")	–	5.7–10.4	7.9–13.9
For opening angle 90°			
350 (14")	5.3–9.3	7.5–11.5	10.4–15.2
400 (16")	3.3–7.1	6.8–10.8	8.6–12.3
450 (18")	3.3–5.7	5.7–9.3	7.9–11.9
500 (20")	3.1–5.3	5.3–7.9	7.5–11
550 (22")	2.9–4.6	4.2–7.1	5.7–10.1
600 (24")	2.9–4.2	3.3–6	–
For opening angle 110°			
300 (12")	4.4–7.9	6.2–11.7	–
350 (14")	4.4–7.5	6–10.1	7.9–12.3
400 (16")	4–6.4	5.7–8.6	7.7–11
450 (18")	3.1–4.9	4.9–8.2	6.4–9.7
500 (20")	2.9–4.9	4.4–7.5	5.7–8.2
550 (22")	2.2–4	3.5–7.1	5.1–8.6
600 (24")	–	3.3–6	4.9–7.5

Opening angle 75°

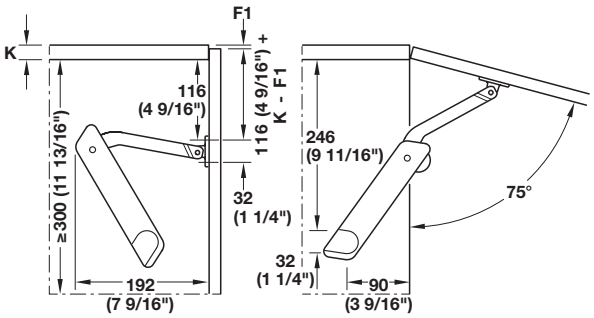

Opening angle 90°

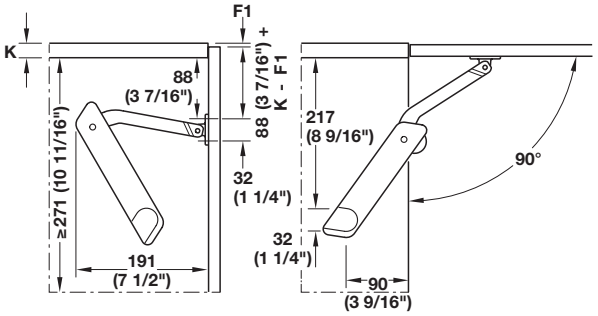

Opening angle 110°

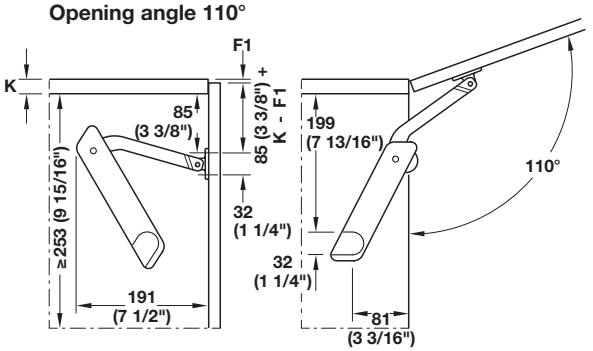

F1 > 2 mm (1/16")

Note
The following dimensions and sample measurement tables must be strictly observed for this kind of application. Two Free Flap H 1.5 fittings must be installed for door widths from 600 mm (24") and above. The weight specification applies to one fitting. When using two fittings the door weight values double. Application in combination with Salice Push hinges and magnetic door catches.

Information	page 9.105
Complete set/individual fitting	page 9.110
Accessories for Push	page 9.110

Dimensional data not binding. Dimensions in mm, inches are approximate. We reserve the right to alter specifications without notice.

Häfele Free Flap H 1.5 without Handle

> Push-to-open for automatic complete opening

Door height	Door weight lbs.		
	Model B	Model C	Model D
For opening angle 75°			
350 (14")	5.7-7.9	6.8-11.7	10.4-14.6
400 (16")	5.1-6.8	6.8-11.2	9.5-14.6
450 (18")	4-5.7	5.7-8.8	7.9-12.3
500 (20")	3.5-5.1	5.1-7.9	7.3-10.6
550 (22")	3.3-4.6	4.6-7.9	6.8 -10.1
600 (24")	3.1-4.4	4.4-7.1	6-9.3
For opening angle 90°			
350 (14")	3.7-5.5	4.6-7.1	6.6-8.8
400 (16")	2.9-4.2	4.2-6.2	6.2-8.8
450 (18")	2.4-3.3	3.3-5.7	4.9-7.1
500 (20")	–	3.1-5.3	4.4-6.4
550 (22")	–	2.9-4.9	6.6-10.1
600 (24")	–	2.9-3.7	3.3-5.5
For opening angle 110°			
300 (12")	3.3-4.6	4.6-6.6	6-9
350 (14")	3.3-4.6	4.2-6	5.7-8.2
400 (16")	2.4-3.3	3.3-5.5	4.9-7.7
450 (18")	2.2-2.9	2.9-5.1	4.4-6.4
500 (20")	–	2.6-3.7	3.5-6
550 (22")	–	2.6-3.7	3.3 -5.1
600 (24")	–	2.6-3.3	2.9-4.6

Note
The following dimensions and sample measurement tables must be strictly observed for this kind of application. Two Free Flap H 1.5 fittings must be installed for door widths from 600 mm (24") and above. The weight specification applies to one fitting. When using two fittings the door weight values double. Application in combination with Salice Push concealed hinges and magnetic door catches.

Opening angle 75°

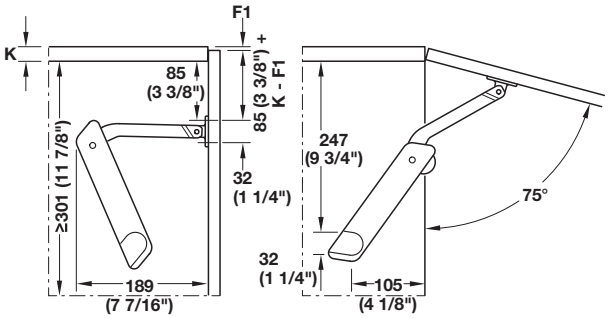

Opening angle 90°

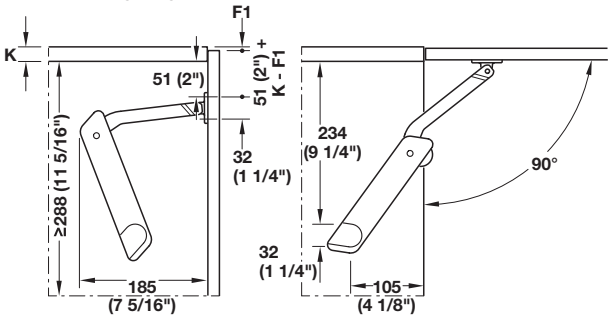

Opening angle 110°

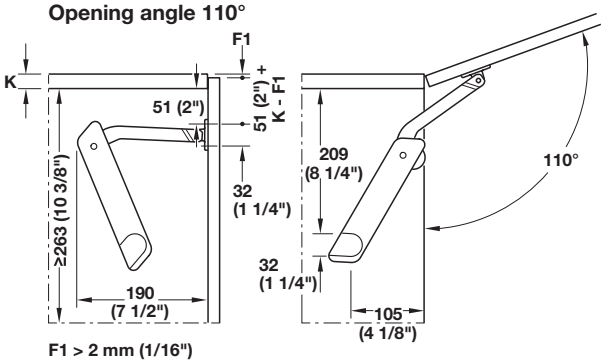

F1 > 2 mm (1/16")

Information	page 9.105
Complete set/individual fitting	page 9.110
Accessories for Push	page 9.110

Dimensional data not binding. Dimensions in mm, inches are approximate. We reserve the right to alter specifications without notice.

Häfele Free Flap H 1.5

→ H 1.5 Set

> For wood or aluminum framed doors
> Installs without tools, clips on
> Holding power adjustment
> Material: Plastic; Finish: gray
Arm: Zinc Alloy; Finish: nickel-plated

Model	Item No.
A	372.28.600
B	372.28.610
C	372.28.620
D	372.28.630

Supplied with
Lid stay
Bracket for cabinet
Bracket for door (for euro screws)
Cover caps
Hex key, SW10
Mounting instructions

Note Use two fittings for flap widths from 600 mm (23 5/8") and above.

Accessories

→ Cover Cap

> For weight bearing capacity adjustment facility
> Material: Plastic; Color: gray

Mounting	Item No.
Right	372.39.000
Left	372.39.001

→ Bracket for Cabinet

> Screw mounted
> Mounts on both sides
> Material: Plastic

Color	Item No.
gray	372.39.016

→ SW10 Hex Key

> SW10
> Material: Plastic

Color	Item No.
gray	235.79.301

→ Bracket for Door

> Screw mounted
> Mounts on both sides
> Material: Plastic

Color	Item No.
gray	372.39.014

→ Adapter

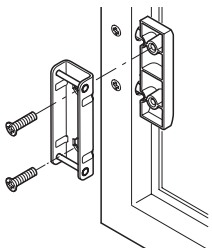

> For doors with 20 mm (13/16") aluminum frame
> Material: Zinc Alloy

Finish	Item No.
nickel-plated	372.37.044

Dimensional data not binding. Dimensions in mm, inches are approximate. We reserve the right to alter specifications without notice.

Häfele Free Flap H 1.5 Accessories

> Developed to meet the market trend of handle-less furniture
> Self-opening hinges and release devices that can easily be mounted to your furniture
> Door thickness: 16–23 mm (5/8"–7/8") for 110°
> Side panel thickness: from 16 mm (5/8")
> Tab: 3–6 mm (1/8"–1/4") for 110°
> Allows for a very "clean" design appearance
> Reverse-spring hinges help "PUSH" the door open

→ Salice PUSH System

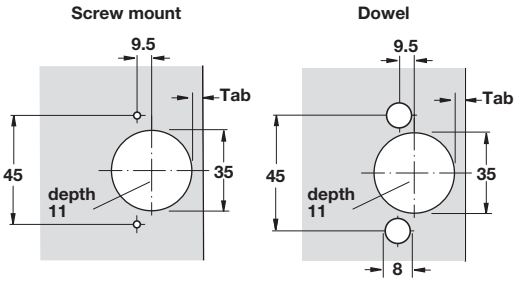

> Material: Steel; Finish: nickel-plated

Mounting	Overlay	Hinge arm	Model	Item No.
Screw	full		C2PPA99	329.17.800
Dowel	full		C2RPA99	329.17.810

→ Magnetic PUSH Latch

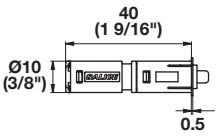

> Material: Plastic

Color	Item No.
gray	356.06.462

Note
Order catch below.

→ Retaining Catch

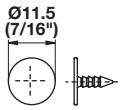

> With pin
> Nail-on
> Material: Steel

Finish	Item No.
nickel-plated	356.06.464

→ Retaining Catch

> With adhesive strip
> Material: Steel

Finish	Item No.
nickel-plated	356.06.465

Mounting plates pages 9.37-9.42

Dimensional data not binding. Dimensions in mm, inches are approximate. We reserve the right to alter specifications without notice.

Häfele Maxi

- For wood or aluminum framed doors
- All common applications for doors and openings can be achieved by changing mounting position and combining Maxi with the appropriate accessories
- Applications include fronts with and without handle and aluminum frame, automatic opening to the end position, multi-position stop and easy opening of heavy fronts
- Can be used on one or both sides depending on the size of the door
- Holding power can be adjusted individually to respective flap weight

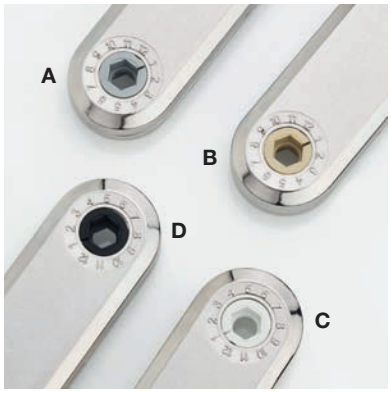

Overview of finish designation
(Adjusting screw) for differentiating the models “A”, “B”, “C” and “D”

Front adjustment facility

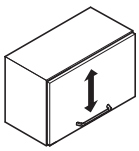

***Height adjustment**

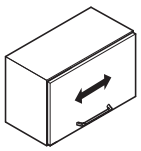

***Side adjustment**

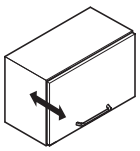

***Tilt adjustment**

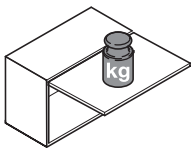

Holding power adjustment with SW10 Hex key, see page 9.124

Note
*Depends on the hinges that are installed.

Dimensional data not binding. Dimensions in mm, inches are approximate. We reserve the right to alter specifications without notice.

Häfele Maxi Applications

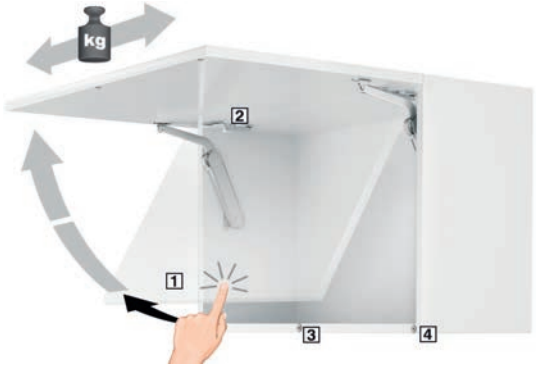

> For handle-free doors

Touch-To-Open

> For opening the door slightly and with multi-position stop

1 Slight pressure on the front opens the door slightly, then it can be opened and closed completely by hand. The front is locked reliably in any position.
2 Application in combination with Salice Push concealed hinges.
3 Door is held closed by magnetic door catch and counter plate on the front panel.
4 Additional magnets for holding the door closed (optional).

Application	page **9.114**
Fitting	page **9.118**
Accessories for Push	page **9.119**

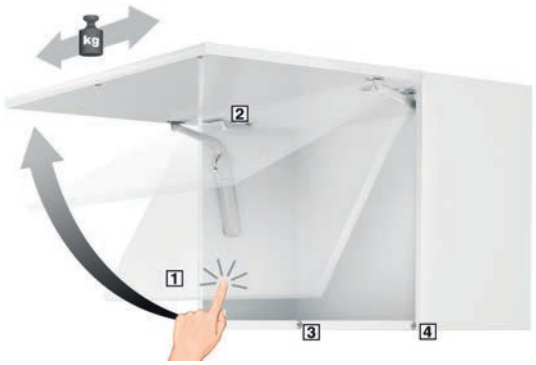

Push-To-Open

> For automatic complete opening

1 Slight pressure on the front opens the door completely to the end position.
2 Application in combination with Salice Push concealed hinges.
3 Door is held closed by magnetic door catch and counter plate on the front panel.
4 Additional magnets for holding the door closed (optional).

Application	page **9.114**
Fitting	page **9.118**
Accessories for Push	page **9.119**

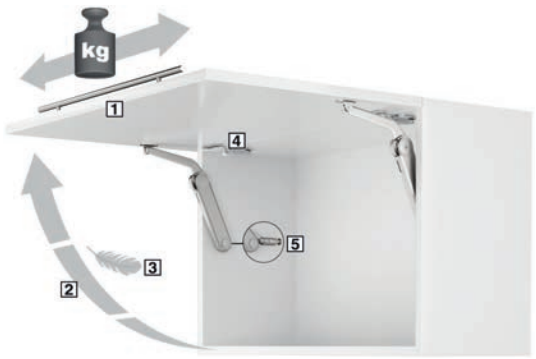

Power-Assisted Opening

1 For wide and heavy doors with handle.
2 Door locks reliably in any position.
3 Less manual force needed to open the door.
4 Application in combination with concealed hinges with or without automatic closing.
5 Optional soft closing mechanism available (recommended).

Application	page **9.114**
Fitting	page **9.118**
Accessories/Soft closing mechanism	page **9.119**

Particularly Wide and Heavy Doors

1 For particularly wide and heavy doors with handle.
2 Door locks reliably in any position.
3 Mounting in series drilled holes 32 mm (1 1/4");
Edge distance: 37 or 28 mm (1 7/16" or 1 1/8").
4 Application in combination with concealed hinges with or without automatic closing.
5 Optional soft closing mechanism available (recommended).

Application	page **9.114**
Fitting	page **9.118**
Accessories/Soft closing mechanism	page **9.119**

Dimensional data not binding. Dimensions in mm, inches are approximate. We reserve the right to alter specifications without notice.

Häfele Maxi Touch-to-open

> For opening the door slightly and with multi-position stop

Door height	Door weight lbs.			
	Model A	Model B	Model C	Model D
For opening angle 75°				
300 (12")	4.4–8.4	8.8–17	15.4–30.8	-
400 (16")	3.5–6.8	6.6–13.9	11–25.3	15.4–27.5
500 (20")	2.9–5.5	5.9–11.4	10.3–18.5	12.1–23.1
600 (24")	-	5.3–9.9	9.5–17.2	10.3–18.5
700 (28")	-	4.8–8.8	8.8–16.5	9.5–17.6
800 (32")	-	-	7.9-13.6	8.6–16.1
900 (36")	-	-	7.5–12.8	7.7–14.7
For opening angle 90°				
300 (12")	4.4–7.7	7.3–14.8	13.6–22.7	17.1–30
400 (16")	3.3–5.7	5.5–11	12.1–17.1	12.8–22.4
500 (20")	2.6–4.6	4.4–8.8	7.9–13.9	10.3–18
600 (24")	2.2–4	3.7–7.3	6.6–11.4	8.6–15
700 (28")	2–3.1	3.1–5.9	5.5–9.5	7–12.6
800 (32")	1.5–2.9	2.6–5.7	4.8–8.6	6.4–11.2
900 (36")	1.5–2.6	2.4–4.8	4.4–7.5	5.7–9.9
1000 (40")	1.3–2.2	2.2–4.4	4–6.8	5.2–9
For opening angle 110°				
200 (12")	2.6–6.4	5.7-12.1	10.1–21	-
400 (16")	2–4.8	4.4–9.7	8.4–15.4	10.1–19.1
500 (20")	1.5–4	3.7–7.5	6.8–12.8	8.1–14.3
600 (24")	-	3.1–6.6	5.7–10.3	6.8–12.8
700 (28")	-	-	5.1–9	6.2–9.9
800 (32")	-	-	4–6.8	5.3–9
900 (36")	-	-	-	4.6–8.6
1000 (40")	-	-	-	4–8.1

Opening angle 75°

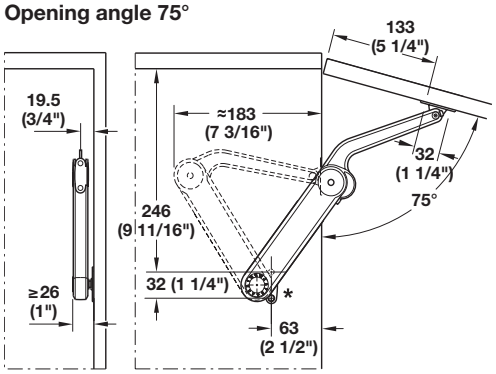

Opening angle 90°

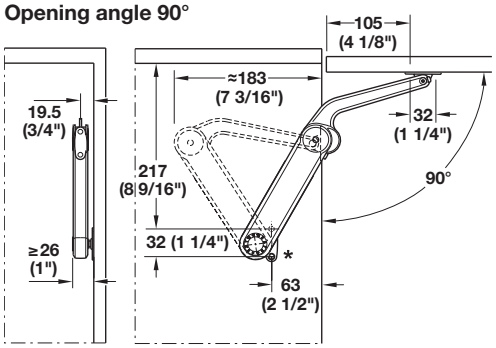

Opening angle 110°

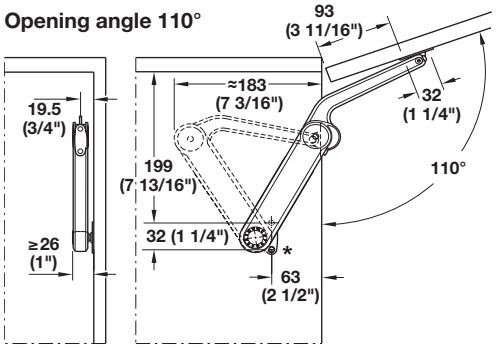

***Dimensions for Maxi with mounting bracket for 37 mm (1 7/16") edge distance**

Note
The following dimensions and sample measurement tables must be strictly observed for this kind of application. Two Maxi fittings must be installed for door widths from 600 mm (24") and above. The weight specification applies to one Maxi fitting. When using two Maxi fittings the door weight values double. Application in combination with Salice Push hinges and magnetic door catches.

Information	page 9.112
Maxi complete set/individual fitting	page 9.118
Accessories for Push	page 9.119

Dimensional data not binding. Dimensions in mm, inches are approximate. We reserve the right to alter specifications without notice.

Häfele Maxi Push-to-open

> For automatic complete opening

Door height	Door weight lbs.			
	Model A	Model B	Model C	Model D
For opening angle 75°				
300 (12")	5.2–7.2	9.9–14.9	12.1–20.9	18.9–25.9
400 (16")	3.7–5	7.9–11.6	10.1–16.9	13.2–22.2
500 (20")	-	5.9–10.3	9.4–15.4	12.7–20.2
600 (24")	-	4.6–7.2	6.3–11.2	8.5–14.5
700 (28")	-	4.6–6.6	5.7–9.9	7.4–12.7
800 (32")	-	-	5.5–9.2	7.2–12.1
900 (36")	-	-	4.6–8.1	6.1–10.5
1000 (40")	-	-	4.4–7.4	5.9–9.6
For opening angle 90°				
300 (12")	3.7–5.2	6.8–10.1	8.3–15.4	12.7–21.5
400 (16")	-	5.2–8.1	6.8–12.1	9.2–15.6
500 (20")	-	3.5–6.3	5.7–9.9	7.4–12.7
600 (24")	-	3.3–5.2	4.6–7.9	6.3–10.5
700 (28")	-	2.6–4.6	3.3–7	5.5–8.8
800 (32")	-	-	2.8–6.3	4.8–8.3
900 (36")	-	-	2.4–5.7	4.1–7.2
1000 (40")	-	-	-	3.5–6.6
For opening angle 110°				
300 (12")	-	5.9–8.8	7.7–13.4	11.2–17.1
400 (16")	-	3.9–6.6	5.9–10.1	7.4–11
500 (20")	-	3.7–5.2	5–8.1	6.6–10.7
600 (24")	-	3–4.6	3.9–6.8	5.5–9.2
700 (28")	-	-	3.5–5.9	4.8–7.7
800 (32")	-	-	-	3.9–6.8
900 (36")	-	-	-	3–6.3
1000 (40")	-	-	-	2.6–5.7

Opening angle 75°

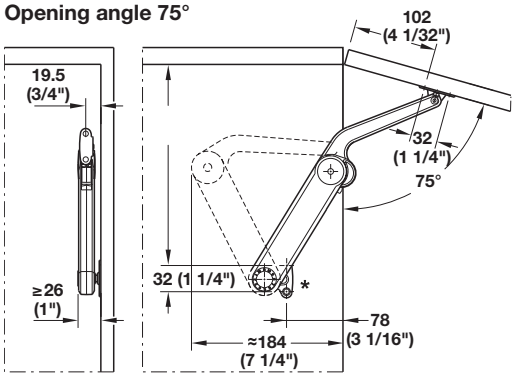

Opening angle 90°

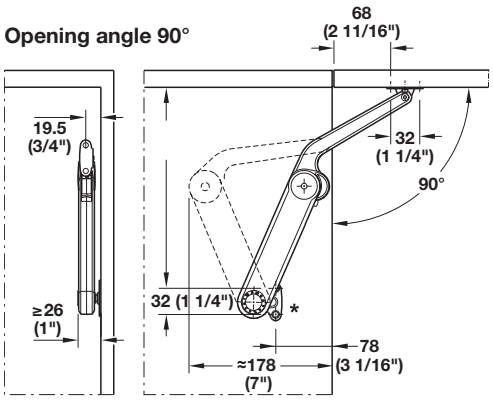

Opening angle 110°

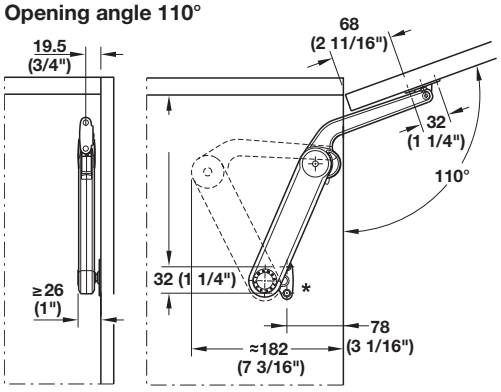

***Dimensions for Maxi with mounting bracket for 37 mm (1 7/16") edge distance**

Note
The following dimensions and sample measurement tables must be strictly observed for this kind of application. Two Maxi fittings must be installed for door widths from 600 mm (24") and above. The weight specification applies to one Maxi fitting. When using two Maxi fittings the door weight values double. Application in combination with Salice Push concealed hinges and magnetic door catches.

Information	page 9.112
Maxi complete set/individual fitting	page 9.118
Accessories for Push	page 9.119

Dimensional data not binding. Dimensions in mm, inches are approximate. We reserve the right to alter specifications without notice.

Häfele Maxi with Handle

Opening angle 75°

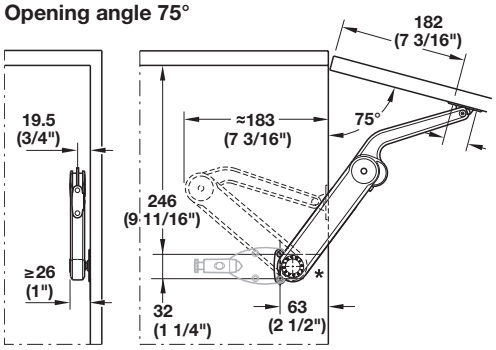

Opening angle 90°

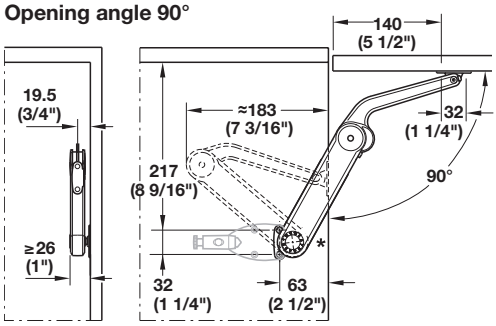

Opening angle 110°

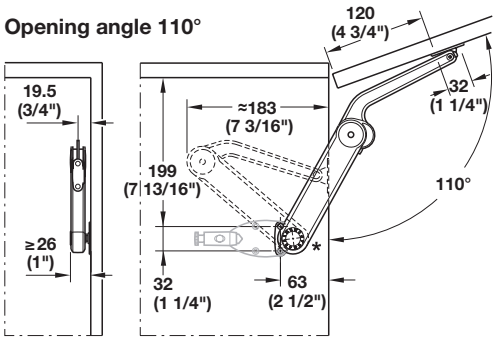

***Dimensions for Maxi with mounting bracket for 37 mm (1 7/16") edge distance**

> For power-assisted opening

Door height	Door weight lbs. Model A	Model B	Model C	Model D
For opening angle 75°				
400 (16")	4.9–8.8	9.5–18	15.6–30.8	-
500 (20")	4–7.1	7.5–15.4	14.1–25.3	15–29.5
600 (24")	3.5–6.6	6.4–12.1	11.2–22	14.1–24.6
700 (28")	3.1–6.2	5.7–11.2	10.8–20	11.7–22.4
800 (32")	-	5.3–10.1	8.8–16.3	10.8–19.8
900 (36")	-	4.8–9.7	8.4–15.4	10.3–18
1000 (40")	-	4.4–9.2	7.7–14.7	9.7–16.8
For opening angle 90°				
300 (12")	5.9–11.2	11–18.7	17.6–26.4	19.8–33
400 (16")	4.6–7.7	9.9–14.7	12.8–24.7	15.8–29.7
500 (20")	3.5–5.7	7.7–12.1	9.9–19.4	13.2–24.2
600 (24")	2.9–4.8	5.9–9.5	8.6–16.9	10.6–18.7
700 (28")	2.6–4.4	5.5–8.1	7–14.1	9.2–16.7
800 (32")	-	5.3–7.5	6.6–11.9	7.7–14.7
900 (36")	-	-	5.9–11.4	6.6–13.2
1000 (40")	-	-	-	5.9–12.1
For opening angle 110°				
300 (12")	3.1–7.1	6.8–13	11.9–22	-
400 (16")	2.6–5.5	6.6–11	9.2–17.8	10.6–19.8
500 (20")	2–4.4	4.8–8.4	7–13.9	6.2–16.5
600 (24")	1.5–3.3	4.2–7.7	5.9–13.2	7.7–15
700 (28")	-	3.7–5.9	5.5–9.9	6.6–11.4
800 (32")	-	-	4.8–7.9	5.7–10.3
900 (36")	-	-	-	5.1–9.5
1000 (40")	-	-	-	4.4–8.8

Note
The following dimensions and sample measurement tables must be strictly observed for this kind of application. Two Maxi fittings must be installed for door widths from 600 mm (24") and above. The weight specification applies to one Maxi fitting. When using two Maxi fittings the door weight values double. Application in combination with concealed hinges with or without self closing.

Information	page 9.112
Complete set/individual fitting	page 9.118
Accessories/optional soft closing mechanism	page 9.119

Dimensional data not binding. Dimensions in mm, inches are approximate. We reserve the right to alter specifications without notice.

Häfele Maxi with Handle

> For paticularly wide and heavy doors

Door height	Door weight lbs.			
	Model A	Model B	Model C	Model D
For opening angle 75°				
300 (12")	8.4–15.6	14.7–30.1	26.2–46.2	33.9–60.1
400 (16")	6.2–11.7	11–22.7	19.6–34.8	25.5–45.1
500 (20")	5.1–9.5	9–18.3	15.8–27.5	20.7–35.6
600 (24")	4.2–7.7	7.3–15.4	13–23.3	16.7–30.1
700 (28")	3.5–6.6	6.2–12.5	11–19.4	14.3–25.1
800 (32")	3.1–5.9	5.5–11.2	9.7–17.4	12.5–22.9
900 (36")	2.9–5.3	4.8–10.1	8.8–15.4	5.5–20
1000 (40")	2.4–4.6	4.4–9	7.9–13.9	10.1–18
For opening angle 90°				
300 (12")	6.6–11.7	11.2–22.4	20–34.8	26.2–45.8
400 (16")	5.1–8.8	8.4–16.7	15.2–26.2	19.6–34.3
500 (20")	4–7	5.3–13.4	12.1–21.1	15.8–27.5
600 (24")	3.3–5.9	5.7–11.22	10.1–17.4	13.2–22.9
700 (28")	2.9–4.8	4.6–9.2	8.4–14.5	10.8–19.1
800 (32")	2.4–4.4	4.2–8.6	7.5–13	9.7–17.2
900 (36")	2.2–4	3.7–7.5	6.6–11.4	8.6–15.2
1000 (40")	1.3–3.5	3.3–6.6	5.9–10.3	7.9–13.6
For opening angle 110°				
300 (12")	5.3–8.8	8.6–16.5	15–25.6	20.2–33
400 (16")	4–6.6	6.4–12.3	11.2–19.1	15.2–24.7
500 (20")	3.1–5.3	5.3–9.9	8.8–15.6	12.5–19.8
600 (24")	2.6–4.4	4.2–8.4	7.3–13	9.9–16.8
700 (28")	2.2–3.7	3.7–6.8	6.4–10.6	8.4–13.6
800 (32")	2–3.1	3.1–6.2	5.7–9.5	7.5–12.3
900 (36")	1.8–2.9	2.9–5.5	5.1–8.4	6.6–11
1016 (40")	1.5–2.6	2.4–4.8	4.4–7.7	5.9–9.9

Note
The following dimensions and sample measurement tables must be strictly observed for this kind of application. Two Maxi fittings must be installed for door widths from 600 mm (24") and above. The weight specification applies to one Maxi fitting. When using two Maxi fittings the door weight values double. Application in combination with concealed hinges with or without self closing.

Opening angle 75°

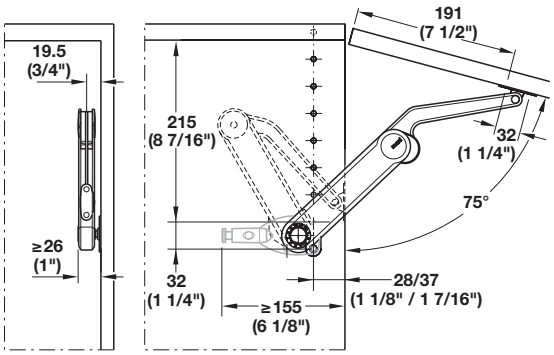

Opening angle 90°

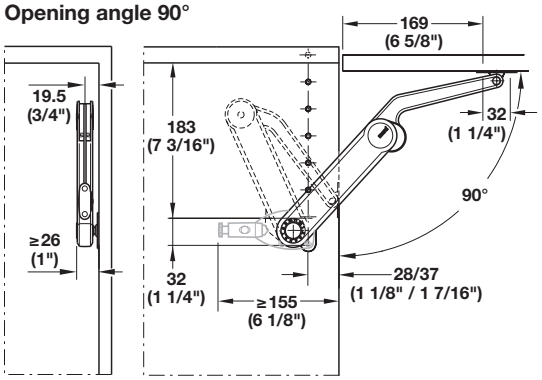

Opening angle 110°

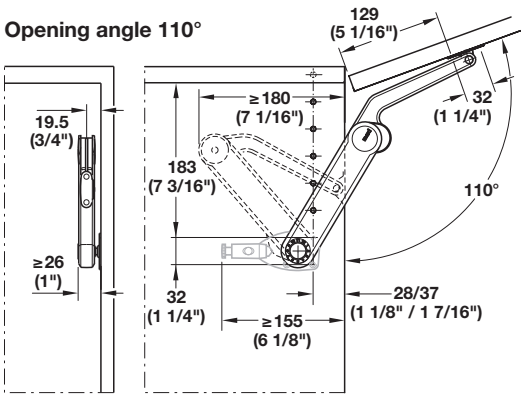

Information	page 9.112
Complete set/individual fitting	page 9.118
Accessories/optional soft closing mechanism	page 9.119

Dimensional data not binding. Dimensions in mm, inches are approximate. We reserve the right to alter specifications without notice.

Häfele Maxi

> For wood or aluminum framed doors
> For left and right hand use
> Installs without tools (clip-on)
> Holding power adjustment

→ Individual Fitting

> Material: Zinc Alloy; Finish: nickel-plated

Model	Item No.
A	373.69.902
B	373.69.900
C	373.69.901
D	373.69.903

→ Complete Set

For wood or aluminum framed doors

> From frame width: 45 mm (1 3/4")
> Edge distance: 37 mm (1 7/16")
> Material: Stay: Zinc Alloy, Finish: nickel-plated; Brackets: Steel

Model	Item No.
A	373.69.512
B	373.69.412
C	373.69.712
D	373.69.312

For aluminum framed doors

> From frame width: 20 mm (13/16")
> Edge distance: 37 mm (1 7/16")
> Material: Stay: Zinc Alloy; Brackets: Steel; Finish: nickel-plated

Model	Item No.
A	373.69.502
B	373.69.402
C	373.69.702
D	373.69.302

Supplied with
Lid stay
Mounting bracket for cabinet
Screw mount bracket for door (for Euro screws)

Note
Use two Maxi fittings for flap widths from 600 mm (23 5/8") and above.

Dimensional data not binding. Dimensions in mm, inches are approximate. We reserve the right to alter specifications without notice.

Häfele Maxi Accessories

→ Mounting Bracket for Cabinet

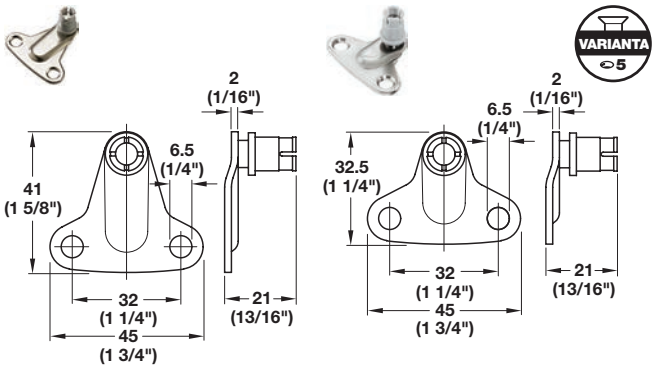

> Material: Steel; Finish: nickel-plated

For edge distance (cabinet)	Item No.
28 (1 1/8")	373.69.907
37 (1 7/16")	373.69.906

→ Soft Closing Mechanism

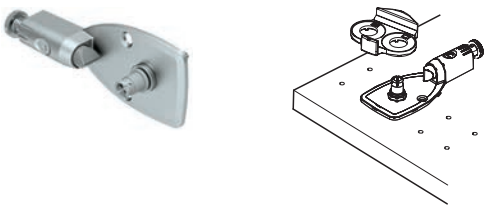

> For edge distances 28 and 37 mm (1 1/8" and 1 7/16")
> Adjustable dampening distance
> Material: Zinc Alloy

Finish	Item No.
nickel-plated	373.69.799

Note
The mounting bracket for the cabinet is not required when using the soft closing mechanism.

→ Hex Key

> SW10
> Material: Plastic

Color	Item No.
gray	235.79.301

→ Mounting Bracket for Wood or Aluminum Frame Door

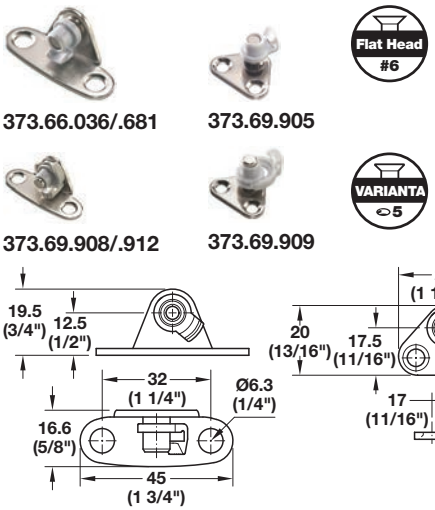

For doors made of wood or with aluminum frame, from frame width 45 mm (1 3/4")

For doors with aluminum frame 20 mm (13/16")

> Screw mount
> Option of slide-on clip for easy mounting
> From frame width: 45 mm (1 3/4")
> Material: Steel; Finish: nickel-plated

Installation	Item No.
Wood screws	373.66.681
Euro screws	373.66.036
With slide-on clip, for euro screws	373.69.908
With slide-on clip, for wood screws	373.69.912

→ Mounting Bracket for Aluminum Frame Door

> From frame width: 20 mm (13/16")

Installation	Item No.
With slide-on clip (for easy mounting)	373.69.909
Without slide-on clip	373.69.905

Note
Use numbers 1–8 for adjusting the holding power.
Use numbers 9–12 to re-adjust door after a certain time (if necessary).

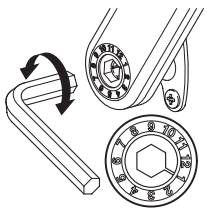

Flat head screws	pages 12.7-12.8, 12.10, 12.13
Varianta screws	page 12.16

Dimensional data not binding. Dimensions in mm, inches are approximate. We reserve the right to alter specifications without notice.

Häfele Maxi Accessories

> Developed to meet the market trend of handle-less furniture
> Self-opening hinges and release devices that can easily be mounted to your furniture
> Door thickness 16–23 mm (5/8"–7/8") for 110°
> Side panel thickness from 16 mm (5/8")
> Tab: 3–6 mm (1/8"–1/4") for 110°
> Allows for a very "clean" design appearance
> Reverse-spring hinges help "PUSH" the door open

→ Salice PUSH System

110°

> Material: Steel; Finish: nickel-plated

Mounting	Overlay	Hinge arm	Model	Item No.
Screw	full		C2PPA99	329.17.800
Dowel	full		C2RPA99	329.17.810

Screw mount

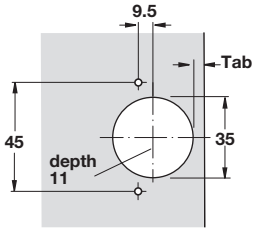

Dowel, Rapido, Logica

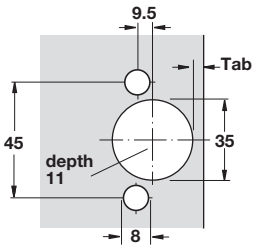

→ Magnetic PUSH Latch

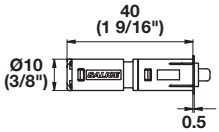

> Material: Plastic

Color	Item No.
gray	356.06.462

Note Order catch below.

→ Retaining Catch

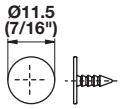

> With pin
> Nail-on
> Material: Steel

Finish	Item No.
nickel-plated	356.06.464

→ Retaining Catch

> With adhesive strip
> Material: Steel

Finish	Item No.
nickel-plated	356.06.465

Mounting plates pages 9.37-9.42

Dimensional data not binding. Dimensions in mm, inches are approximate. We reserve the right to alter specifications without notice.

Häfele Free Flap 1.7

> For small one-piece wood or aluminum doors
> Door height: 200–450 mm (8"–18")
> Opening angle of 107° can be limited to 90° by means of optional opening angle restraint
> Adjustments: Height/side/tilting angle of front +/- 1.5 mm (1/16"), holding power
> Material: Fitting: Steel; Finish: nickel-plated
Cover Cap: Plastic; Color: gray RAL 7035

→ 1.7 Set

Model	Item No.
A	372.91.320
B	372.91.321
C	372.91.322

Supplied With
2 Fittings (right/left)
2 Cover caps for fitting (right/left)
2 Screw-on brackets for wood doors or doors with aluminum frame, from frame width 45 mm (1 3/4")
Installation instructions
Paper drilling template

Installation

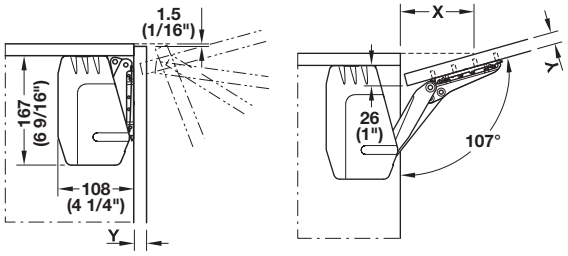

Front panel thickness **Y**	16 (5/8")	19 (3/4")	22 (7/8")	26 (1")	28 (1 1/8")
Distance **X** (with top panel thickness 16 mm (5/8")	83 (3 1/4")	74 (2 15/16")	64 (2 1/2")	52 (2 1/16")	46 (1 13/16")

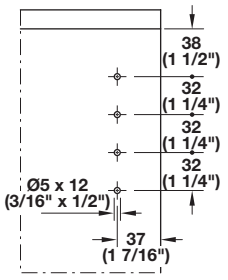

Drilling pattern for cabinet

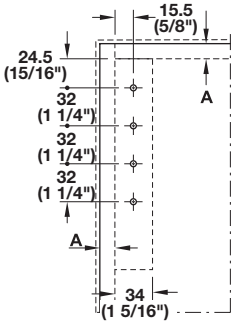

Drilling pattern for front panel

VARIANTA ⌀5

Sample measurements table for max. door weight in lbs.						
Model/ door height	**A**		**B**		**C**	
	Min.	**Max.**	**Min.**	**Max.**	**Min.**	**Max.**
200 (8")	3.7	10.1	7.9	17.4	15	32.3
225 (9")	3.3	9.0	6.8	15.6	13.2	28.8
250 (10")	2.9	8.4	6.4	14.1	11.9	26.0
275 (11")	2.6	7.3	5.5	12.5	10.6	23.3
300 (12")	2.4	6.8	5.3	11.2	9.7	21.1
325 (13")	2.2	6.2	4.6	10.1	8.8	19.4
350 (14")	2.0	5.7	4.4	9.2	8.1	17.8
375 (15")	2.0	5.1	4.2	8.4	7.7	16.5
400 (16")	1.8	4.6	3.7	7.9	7.0	15.4
425 (17")	1.5	4.1	3.3	7.4	6.3	14.3
450 (18")	1.3	3.7	3.0	7.0	5.9	13.4

→ Opening Angle Restraint

> For limiting opening angle of 107° to 90°
> Material: Plastic

Color	Item No.
black	372.91.499

Varianta screws page 12.16

Dimensional data not binding. Dimensions in mm, inches are approximate. We reserve the right to alter specifications without notice.

Häfele Free Flap 3.15

> For large one-piece wood or aluminum doors from frame width 45 mm (1 3/4")
> Door height: 350–650 mm (14"–26")
> Opening angle 90° or 107°, adjustable on fitting
> Adjustments: Height/side/tilting angle of front +/- 1.5 mm (1/16"), holding power
> Material: Steel; Finish: nickel-plated
Cover Cap: Plastic; Color: gray RAL 7035

Note Fitting is visible with clear and acid-etch glass, back painted glass should be considered.

→ 3.15 Set

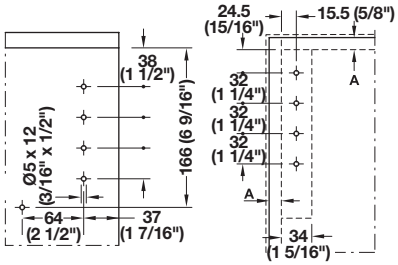

Drilling pattern for cabinet

Drilling pattern for front panel

Model	Item No.
D	372.91.330
E	372.91.331
F	372.91.332
G	372.91.333

Supplied With
2 Fittings (right/left)
2 Cover caps for fitting (right/left)
2 Screw-on brackets
Installation instructions
Paper drilling template

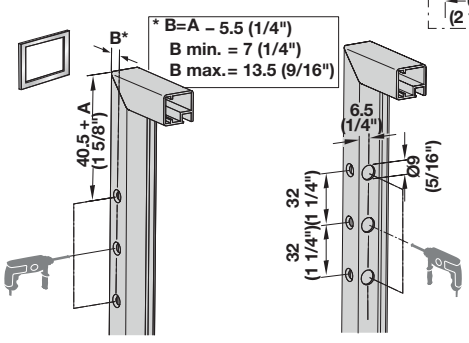

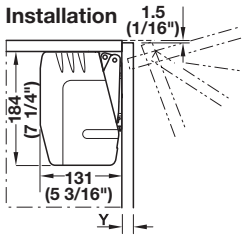

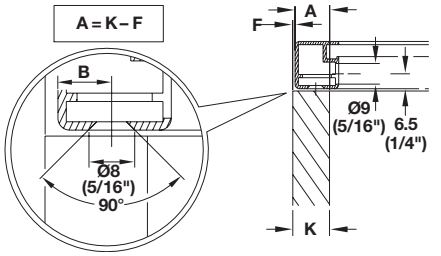

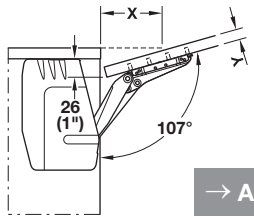

VARIANTA ⌀5

Front panel thickness **Y**	16 (5/8")	19 (3/4")	22 (7/8")	26 (1")	28 (1 1/8")
Distance **X** (with top panel thickness 16 mm (5/8")	83 (3 1/4")	74 (2 15/16")	64 (2 1/2")	52 (2 1/16")	46 (1 13/16")

Sample measurements table for max. door weight in lbs.

Model/ Door Height	D		E		F		G	
	Min.	Max.	Min.	Max.	Min.	Max.	Min.	Max.
350 (14")	11.4	24.2	14.7	31.4	22.2	47.0	29.7	60.0
375 (15")	10.7	22.4	13.8	28.8	20.6	43.5	27.5	55.4
400 (16")	10.3	21.1	13.0	27.3	19.6	40.9	26.0	51.3
425 (17")	9.7	19.8	12.3	25.5	18.3	38.3	24.2	48.0
450 (18")	9.0	18.5	11.4	24.0	17.2	35.9	22.9	45.1
475 (19")	8.6	17.6	10.8	22.7	16.3	33.9	21.6	42.5
500 (20")	8.1	16.5	10.3	21.3	15.4	32.1	20.2	40.3
525 (21")	7.7	15.6	9.7	20.2	14.5	30.6	19.4	38.1
550 (22")	7.3	15.0	9.2	19.4	13.9	29.0	18.3	36.3
575 (23")	7.0	14.3	8.8	18.5	13.2	27.5	17.6	34.3
600 (24")	6.6	13.6	8.4	17.6	12.5	26.4	16.7	33.0
625 (25")	6.1	12.9	7.9	16.7	11.8	25.3	15.8	31.6
650 (26")	5.7	12.3	7.4	16.0	11.6	24.2	15.1	30.8

→ Adapter

> For aluminum doors 20 mm (13/16") or less
> For left or right hand use
> Material: Zinc Alloy

Finish	Item No.
nickel-plated	372.91.599

Supplied With Screws (M4x10 mm)

Varianta screws page 12.16

Dimensional data not binding. Dimensions in mm, inches are approximate. We reserve the right to alter specifications without notice.

Häfele Free Flap Accessories

> Adjustable cabinet adapter to allow for overlay or inset door mounting in a face frame cabinet
> Stabilizer bracket mounts into the back of the bracket allowing adjustment for various interior sizes and provides extra security and durability for the mounting by reducing the torque that is applied to the front mounting screws
> For use with Free Flap 1.7 and 3.5
> Material: Steel

Note Optional full overlay door bracket, see page **9.125**.

→ Overlay Cabinet Bracket Kit

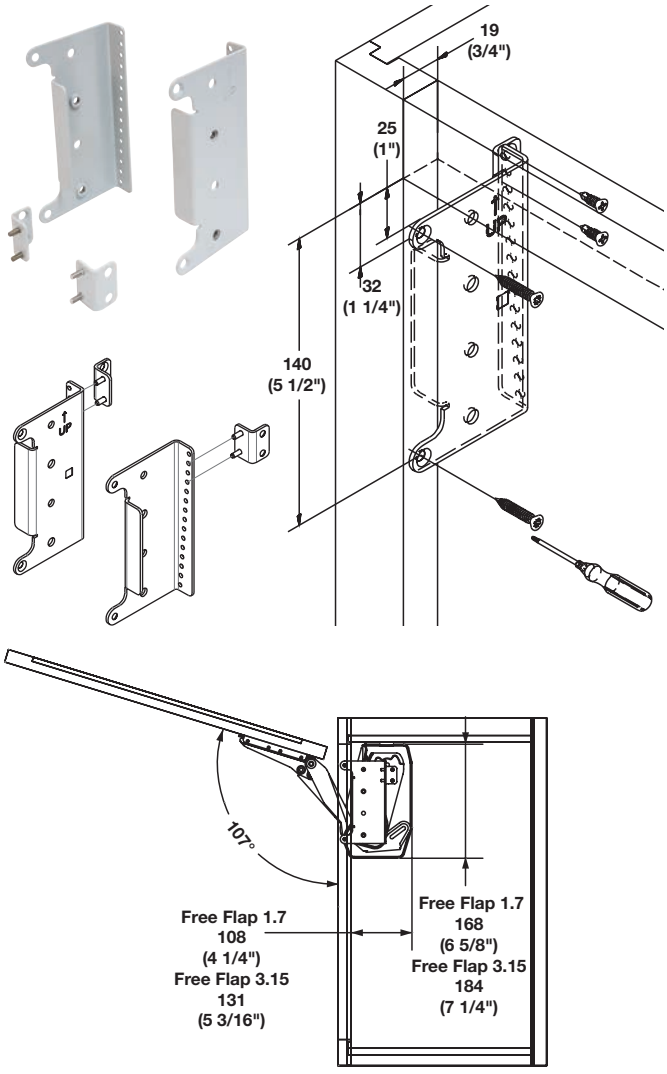

> L x W x H: 120 x 67 x 17 mm (4 3/4" x 2 5/8" x 11/16")

Finish	Item No.
gray	372.29.400

Supplied With
LH and RH cabinet and stabilizer brackets
Mounting screws
Mounting instructions

→ Inset Cabinet Bracket Kit

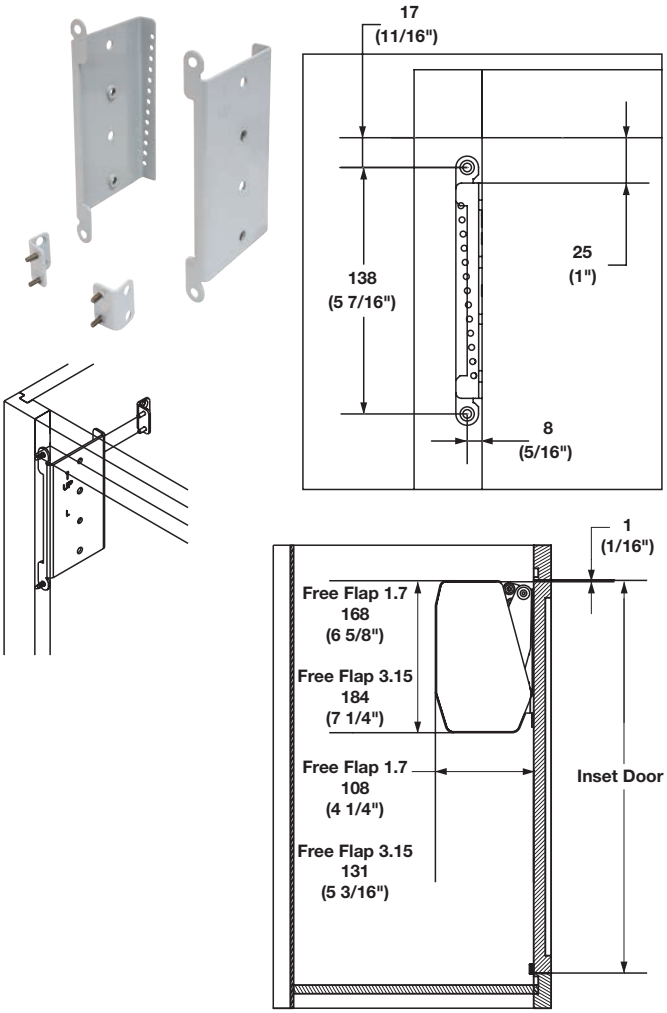

> L x W x H: 151 x 85 x 17 mm (5 15/16" x 3 3/8" x 11/16")

Finish	Item No.
gray	372.29.401

Supplied With
LH and RH cabinet and stabilizer brackets
Mounting screws
Mounting instructions

Dimensional data not binding. Dimensions in mm, inches are approximate. We reserve the right to alter specifications without notice.

Häfele Free Accessories

> For use with Free Flap 1.7 and 3.5

→ Full Overlay Door Bracket, optional

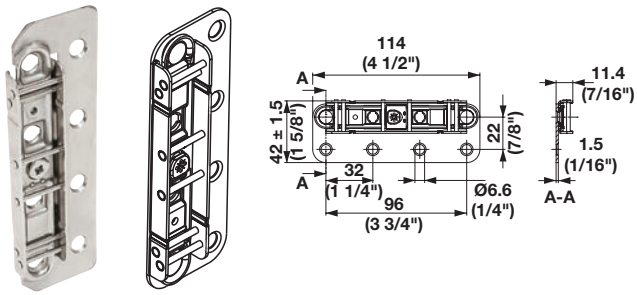

> Allows for the use of 5 panel doors in a face frame full overlay application
> Unhanded
> L x W x H: 114 x 42 x 11.4 mm (4 1/2" x 1 5/8" x 7/16")
> Material: Steel

Finish	Item No.
nickel-plated	372.29.402

Supplied With
2 Brackets
Mounting instructions

→ Replacement Door Mounting Brackets

> For Free Flap 1.7, Free Flap 3.15, Free Up and Free Swing
> Material: Steel

Finish	Item No.
nickel-plated	372.91.141

Dimensional data not binding. Dimensions in mm, inches are approximate. We reserve the right to alter specifications without notice.

This page is left blank intentionally.

Dimensional data not binding. Dimensions in mm, inches are approximate. We reserve the right to alter specifications without notice.

Häfele Free Accessories

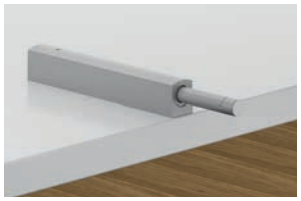

> For front panels without handles; Free Flap 1.7 and 3.5 flap fittings, up to a max. width of 1.200 mm
> Push distance: approx. 2 mm (1/16")

→ Push Catches

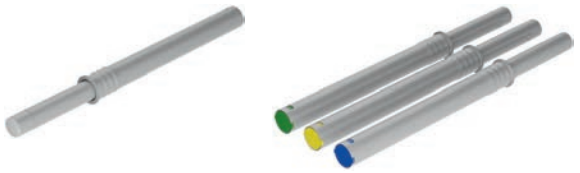

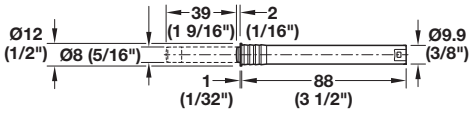

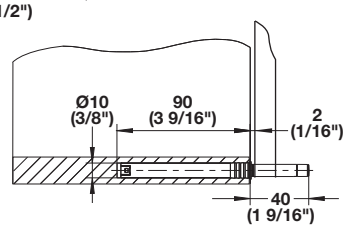

> For mounting into drilled hole, Ø10 x 90 mm (3/8" x 3 9/16") or sliding onto housing below
> Material: Plastic; Color: gray, RAL 7004

Model type	Color code	Force lbs.	Item No.
1	green	3.75–5 lbs.	372.91.470
2	yellow	4.85–7.5 lbs.	372.91.471
3	blue	5.75–10.5 lbs.	372.91.472

Note
Color code on bottom of housing indicates model type.

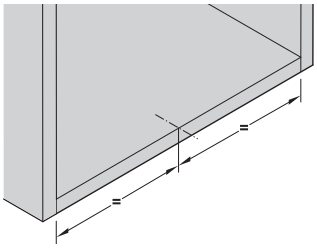

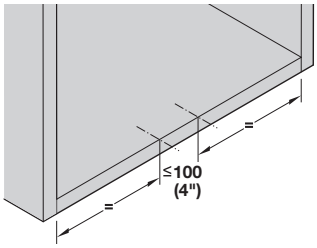

→ Housing - Surface Mount

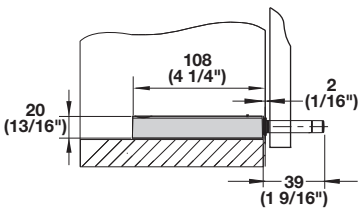

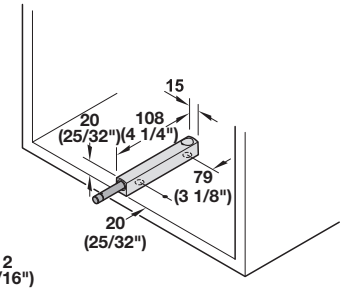

> Screw mounted
> Material: Plastic

Color	Item No.
gray RAL 7035	372.91.479

→ Drilling Jig

	Item No.
	001.25.080

→ Drill Bit for Jig

> Ø10 x 400 mm (3/8" x 15 3/4")

	Item No.
	001.20.351

Dimensional data not binding. Dimensions in mm, inches are approximate. We reserve the right to alter specifications without notice.

Häfele Free Up

> For one-piece wood or aluminum doors
> Ideal for upper cabinets or front panels
> Modern design with clear-cut contours
> Minimum opening resistance, multi-position stop function and soft opening and soft closing mechanism
> Time-saving assembly provided by plugs, pre-mounted Euro screws and clip mounting of front panel and cross bar, eccentric adjustment of front panel
> Adjustment facility: Height adjustment ±1.5 mm, side adjustment ±1.5 mm, tilting angle ±1.5°, holding power
> Material: Plastic, Steel; Finish: nickel-plated
Cover Cap: Plastic; Color: gray

→ Parallel Lift-up Front Fitting

Door height	Door weight lbs.	Model	Item No.
320–360 (12 5/8"–14 3/16")	6.6–12.5	O1us	372.33.500
	10.6–20.5	O2us	372.33.501
345–420 (13 9/16"–16 9/16")	5.3–10.6	P1us	372.33.510
	9–17.6	P2us	372.33.511
	16.3–30.8	P3us	372.33.512
380–500 (14 15/16"–19 11/16")	4.4–8.4	Q1us	372.33.520
	7.5–14.7	Q2us	372.33.521
	13.9–26	Q3us	372.33.522
	20.5–38.3	Q4us	372.33.523
430–600 (16 15/16"–23 5/8")	3.5–7.3	R1us	372.33.530
	5.7–12.1	R2us	372.33.531
	11–21.3	R3us	372.33.532
	16.3–32.1	R4us	372.33.533

Supplied With
2 Fittings (right/left)
Front mounting material for wood or wide aluminum frame doors
Installation instructions
Paper drilling template
2 Cover caps for fitting (right/left)

Note
Cross bars are mandatory to synchronize Left/Right fittings, see next page.
See next page for aluminum framed doors adapter.

Cross bars and adapters page 9.126

Dimensional data not binding. Dimensions in mm, inches are approximate. We reserve the right to alter specifications without notice.

Häfele Free Up/Free Swing Accessories

→ Cross Bar

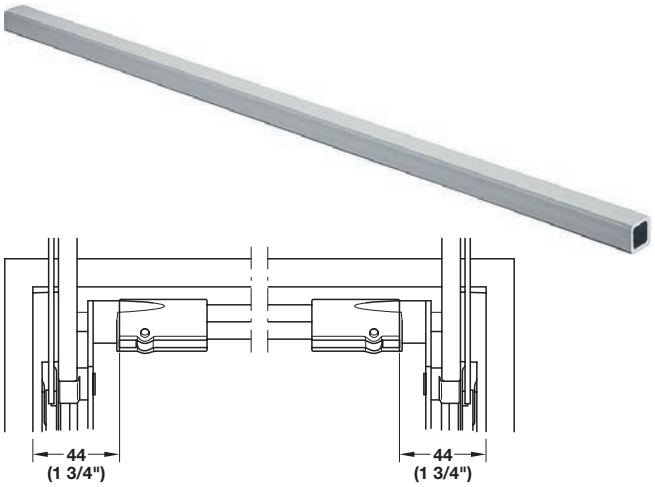

> For synchronizing both fitting parts
> Can be cut-to-size
> Cutting dimension = internal cabinet width - 88 mm (3 7/16")
> Material: Aluminum; Finish: brushed anodized

Cabinet width	Length	Item No.
600 (23 5/8")	474 (18 11/16")	372.33.692
900 (35 7/16")	774 (30 1/2")	372.33.694
1200 (47 1/4")	1074 (42 5/16")	372.33.696
1800 (70 7/8")	1674 (65 7/8")	372.33.698

Note
Cross bar is prepared for side panel thicknesses 16–19 mm (5/8"–3/4").

→ Adapter - For Aluminum Framed Doors

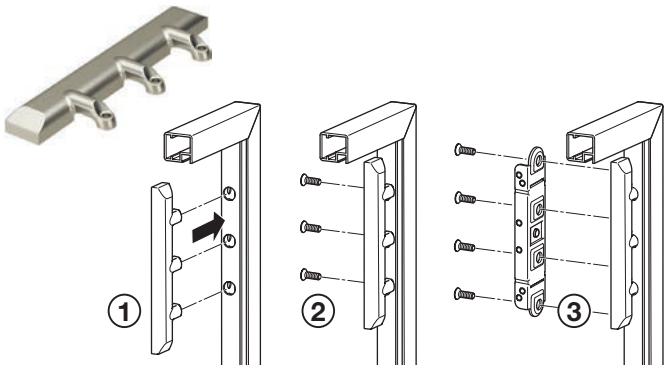

> For doors with 20 mm (13/16") aluminum frame
> For mounting the parallel lift-up front fitting to doors with narrow aluminum frame
> For left or right hand use
> Material: Zinc Alloy

Finish	Item No.
nickel-plated	372.91.599

Supplied With
M4 x 10 mm screws

Note
Fitting is visible with float and satin-frosted glass, passe-partout or obscure glass may be used.

Dimensional data not binding. Dimensions in mm, inches are approximate. We reserve the right to alter specifications without notice.

Häfele Free Up Planning

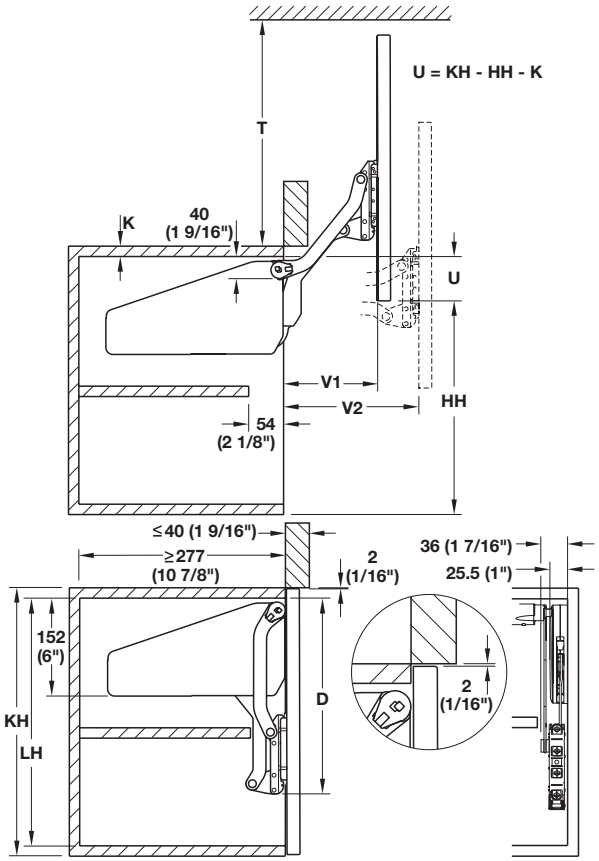

Drilling pattern for front panel

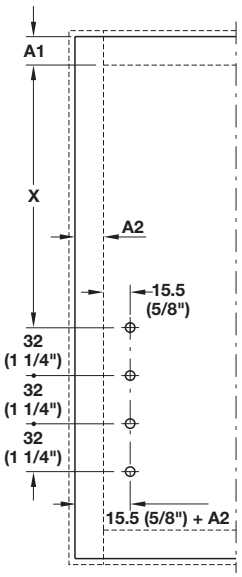

Drilling pattern for adapter for doors with 20 mm (13/16") aluminum frame.

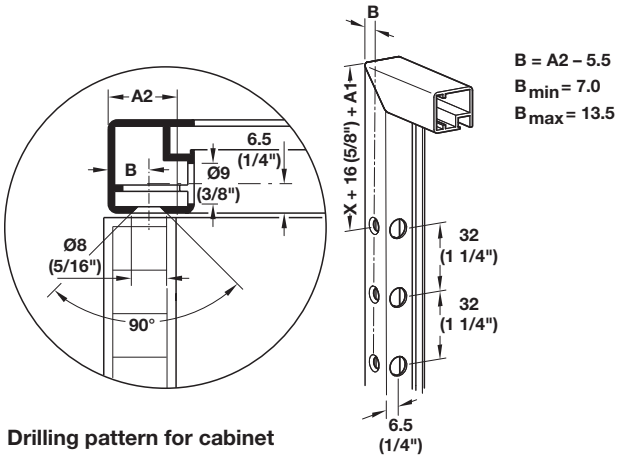

Drilling pattern for cabinet

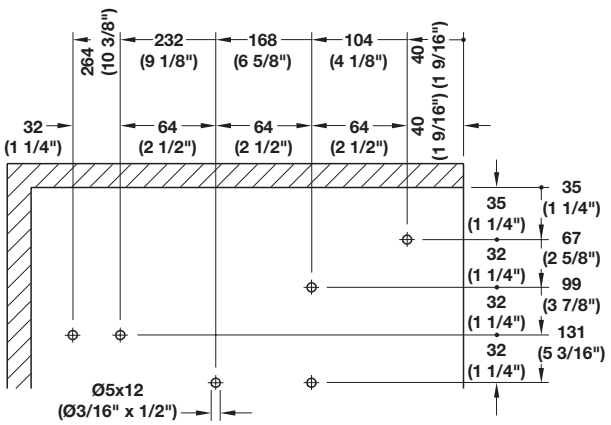

Power adjustment of fitting

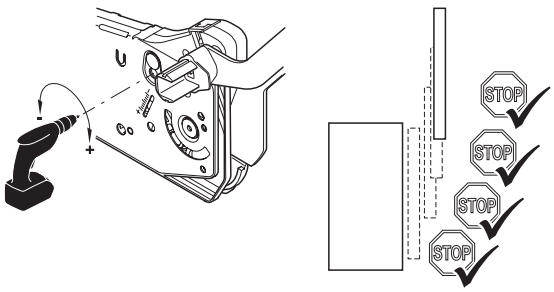

Sample measurement table for choosing the correct model.

KH (cabinet height)	X	D	LH	HH	T	V1	V2
320–360 (12 1/2"–14 3/16")	157 (6 3/16")	274.5 (10 13/16")	>280 (11")	278 (10 7/8")	>281 (11 1/16")	128 (5 1/6")	177 (6 15/16")
345–420 (13 1/2"–16 1/2")	185 (7 1/4")	302.5 (11 15/16")	>308 (12 1/8")	328 (12 15/16")	>333 (13 1/8")	146 (5 3/4")	205 (8 1/16")
380–500 (16–19 11/16")	220 (8 21/32")	337.5 (13 5/16")	>343 (13 1/2")	390 (15 3/8")	>393 (15 1/2")	168 (6 5/8")	240 (9 7/16")
430–600 (17–23 5/8")	265 (10 3/8")	382.5 (15 1/16")	>388 (15 1/4")	470 (18 1/2")	>473 (18 5/8")	196 (7 11/16")	284 (11 3/16")

Dimensional data not binding. Dimensions in mm, inches are approximate. We reserve the right to alter specifications without notice.

Häfele Free Accessories

> For use with Free Up
> Material: Steel

→ Overlay Cabinet Bracket Kit

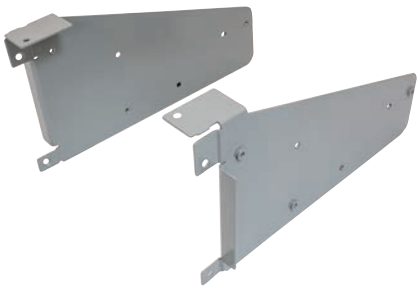

> Allows for overlay door mounting in a face frame cabinet
> Use in wall or corner appliance garage cabinets
> L x W x H: 273 x 151 x 50 mm (10 3/4" x 6" x 2")

Finish	Item No.
gray	372.29.118

Supplied With
LH and RH cabinet and stabilizer brackets
Mounting screws
Mounting instructions

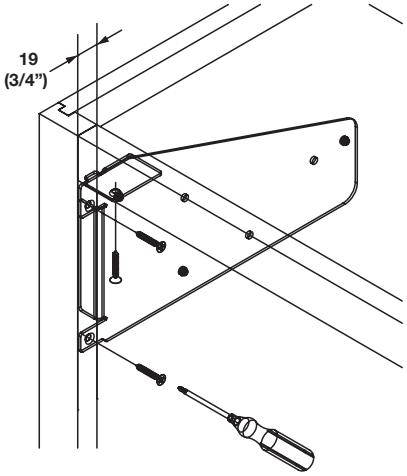

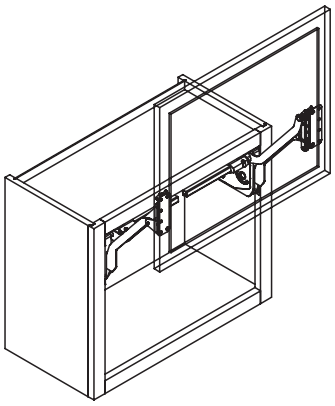

Appliance Garage

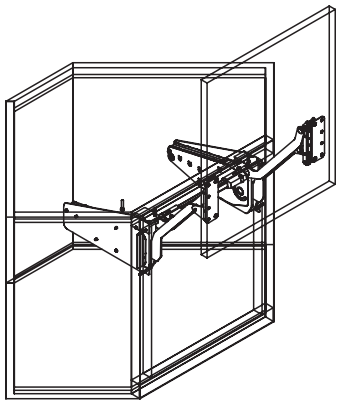

Corner Appliance Garage

→ Full Overlay Door Bracket, optional

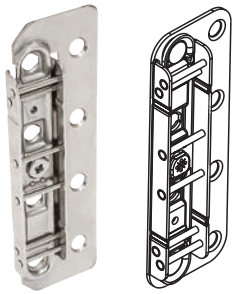

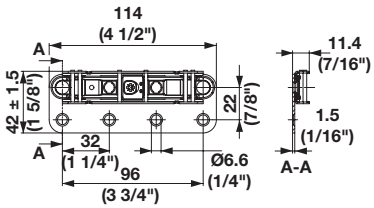

> Allows for the use of 5 panel doors in a face frame full overlay application
> Unhanded
> L x W x H: 114 x 42 x 11.4 mm (4 1/2" x 1 5/8" x 7/16")

Finish	Item No.
nickel-plated	372.29.402

Supplied With
2 Brackets
Mounting instructions

Dimensional data not binding. Dimensions in mm, inches are approximate. We reserve the right to alter specifications without notice.

Häfele Free Swing

- For one-piece wood, glass or aluminum frame doors
- Full access to the cabinet contents; Ideal for large front panels; Modern design with clear-cut contours
- Minimum opening resistance, multi-position stop function and soft opening and soft closing mechanism for ease of operation
- Time-saving assembly provided by tabs, pre-mounted Euro screws and clip mounting of front panel and cross bar, eccentric adjustment of front panel
- Adjustment facility: Height adjustment ±1.5 mm, side adjustment ±1.5 mm, tilting angle ±1.5°, holding power
- Material: Fitting: Plastic, Steel; Finish: nickel-plated Cover Cap: Plastic; Finish: gray

Model Door height	S4sw Flap weight lbs.	S5sw	S6sw	S7sw	S8sw	S9sw
370–500 (14 9/16"–19 11/16")	7–12 lbs.	–	–	11–19 lbs.	–	–
500–670 (19 11/16"–26 3/8")	–	10–19 lbs.	–	–	18–30 lbs.	–
670–800 (26 3/8"–31 1/2")	–	–	12–22 lbs.	–	–	18–33 lbs.

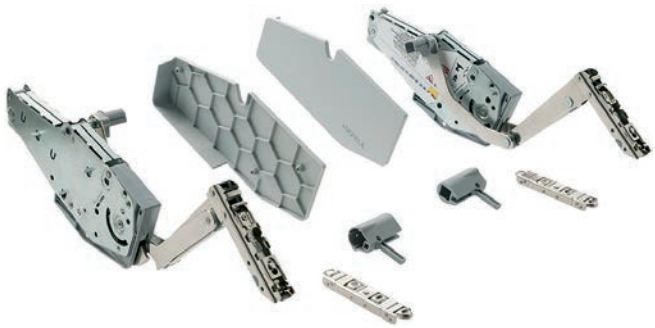

Model	Item No.
S4sw	372.34.501
S5sw	372.34.511
S6sw	372.34.521
S7sw	372.34.502
S8sw	372.34.512
S9sw	372.34.522

Supplied With
2 Fittings (right/left)
Front mounting material for wood or wide aluminum doors
Installation instructions
Paper drilling template
2 Cover caps for fitting (right/left)

Note
Cross bar and adapters for glass front panels or narrow aluminum frames (if applicable) must be ordered separately.
Use two Free swing sets for flap widths >1800 mm (70 7/8").

→ Full Overlay Door Bracket, optional

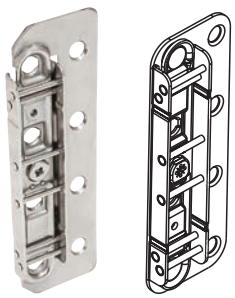

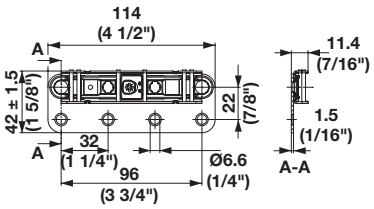

- Allows for the use of 5 panel doors in a face frame full overlay application
- Unhanded
- L x W x H: 114 x 42 x 11.4 mm (4 1/2" x 1 5/8" x 7/16")
- Material: Steel

Finish	Item No.
nickel-plated	372.29.402

Supplied With
2 Brackets
Mounting instructions

Cross bar and adapters page 9.126

Dimensional data not binding. Dimensions in mm, inches are approximate. We reserve the right to alter specifications without notice.

Häfele Free Swing Planning

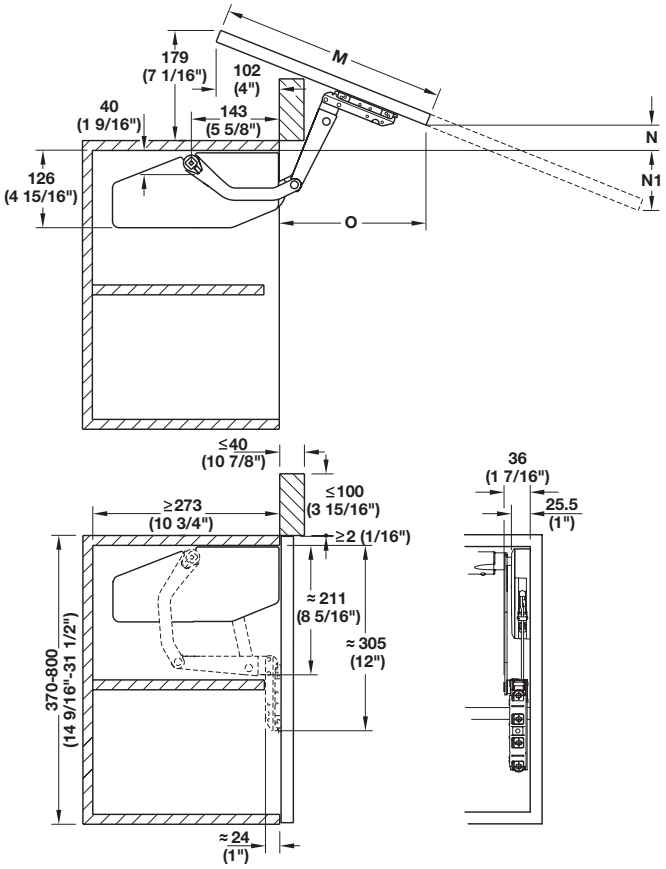

Drilling pattern for adapter for doors with 20 mm (13/16") aluminum frame.

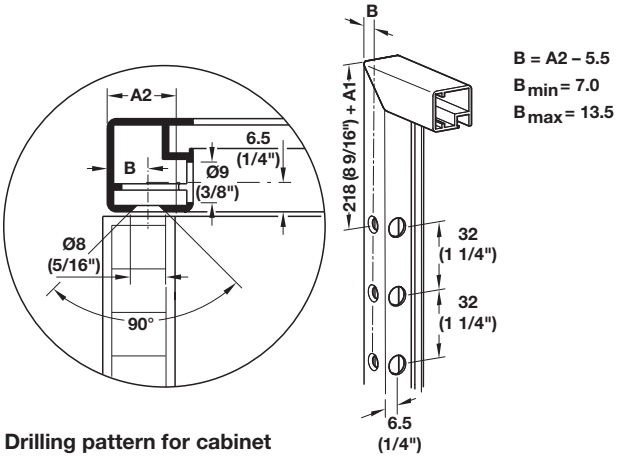

Drilling pattern for cabinet

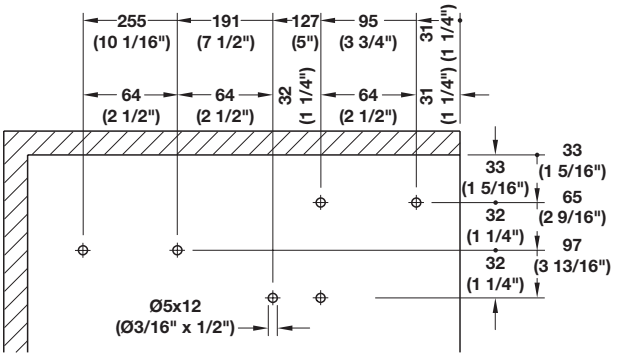

Sample door sizes for planning

M	N	N1	O
366 (14 7/16")	40 (1 9/16")	–	237.4 (9 3/8")
396 (15 9/16")	28.9 (1 1/8")	–	265.3 (10 7/16")
446 (17 9/16")	10.3 (3/8")	–	311.7 (12 1/4")
496 (19 1/2")	–	8.3 (5/16")	358.1 (14 1/8")
546 (21 1/2")	–	26.9 (1 1/16")	404.6 (15 15/16")
596 (23 7/16")	–	45.4 (1 13/16")	451 (17 3/4")
646 (25 7/16")	–	64 (2 1/2")	497.4 (19 9/16")
666 (26 1/4")	–	71.4 (2 13/16")	516 (20 5/16")
696 (27 3/8")	–	82.6 (3 1/4")	543.8 (21 7/16")
746 (29 3/8")	–	101.2 (4")	590.2 (23 1/4")
796 (31 5/8")	–	119.7 (4 11/16")	636.7 (25 1/16")

Drilling pattern for front panel

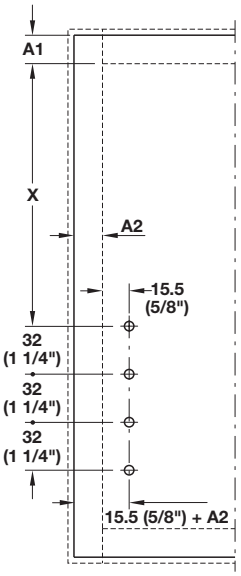

Power adjustment of fitting

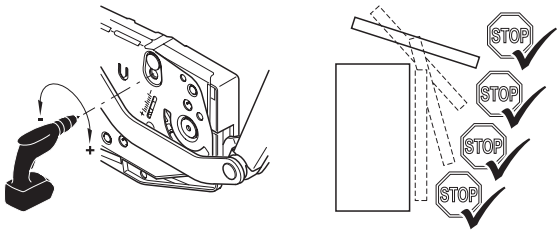

Dimensional data not binding. Dimensions in mm, inches are approximate. We reserve the right to alter specifications without notice.

Häfele Free Fold

> For 2-piece wood or aluminum frame doors of equal size
> Minimum cabinet depth: 288 mm (11 5/16")
> Even high front panels can be lifted up in a space-saving way
> Modern design with clear-cut contours.
> Minimum opening resistance, multi-position stop function and soft opening and soft closing mechanism for ease in operation
> Time-saving assembly provided by tabs, pre-mounted Euro screws and clip mounting of front panel.
> Adjustment facility: Height/side/depth of top panel (via concealed hinge) and lower panel (via connecting hinge), holding power (via fitting)
> Material: Fitting: Plastic/Steel; Finish: nickel-plated
Cover Cap: Plastic; Finish: gray

→ Double Door Lift-up Fitting

Combined door height	Combined door weight lbs.	Model	Item No.
580–650 (22 13/16"–25 9/16")	4.8–9.7	E1fo	372.37.530
	9.5–19.4	E3fo	372.37.532
	13.2–26.8	E4fo	372.37.533
	23.3–46	E5fo	372.37.534
650–730 (25 9/16"–28 3/4")	8.6–17.4	F3fo	372.37.542
	12.8–25.5	F4fo	372.37.543
	20.9–41.1	F5fo	372.37.544
710–790 (27 15/16"–31 1/8")	7.7–15.8	G3fo	372.37.552
	11.4–22.7	G4fo	372.37.553
	19.1–37.8	G5fo	372.37.554
770–840 (30 5/16"–33 1/16")	10.8–21.6	H4fo	372.37.563
	17.6–34.1	H5fo	372.37.564
840–910 (33 1/16"–35 13/16")	9.9–19.8	I4fo	372.37.573
	16–32	I5fo	372.37.574
910–970 (35 13/16"–38 3/16")	9.2–17.6	J4fo	372.37.583
	15–29.7	J5fo	372.37.584
	20.9–39.4	J6fo	372.37.585
960–1010 (37 13/16"–39 3/4")	8.6–16.7	K4fo	372.37.593
	14.3–28.2	K5fo	372.37.594
	18.9–38	K6fo	372.37.591
1000–1067 (39 3/8"–42")	13.6–27.1	L5fo	372.37.599
	17.8–35	L6fo	372.37.596

Supplied With
2 Fittings (right/left)
Front mounting material for wood or wide aluminum frame doors
Installation instructions
Paper drilling template
2 Cover caps for fitting (right/left)

Note
Concealed hinges for mounting the door to the cabinet, connecting hinges and adapters for narrow aluminum frames (if applicable) must be ordered separately. The specified models apply to common door heights and weights. Shorter front panels with higher door weights and taller front panels with lower door weights can also be implemented in individual cases.

Adapter and connecting hinge page 9.132

Dimensional data not binding. Dimensions in mm, inches are approximate. We reserve the right to alter specifications without notice.

Häfele Free Fold Accessories

→ Adapter - For Aluminum Framed Doors

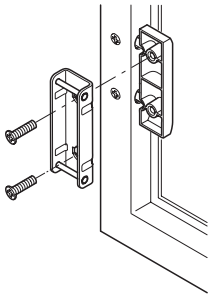

> For doors with 20 mm (13/16") aluminum frame
> Material: Zinc Alloy

Finish	Item No.
nickel-plated	372.37.044

Supplied with
Mounting material

→ Connecting Hinge

> For wood and aluminum frame doors from frame width 20 mm (13/16")
> Mounts with wood screw
> With finger protection function
> Installed with chipboard screws
> Adjustment facility: 3-dimensional
side adjustment: ±2 mm,
gap adjustment: –2 to +1 mm,
depth adjustment: ±1.5 mm
> Material: Zinc Alloy

Finish	Item No.
nickel-plated	372.64.796

Note
The hinge comes apart when fingers get trapped unintentionally in the gap of the door.

Drilling Pattern

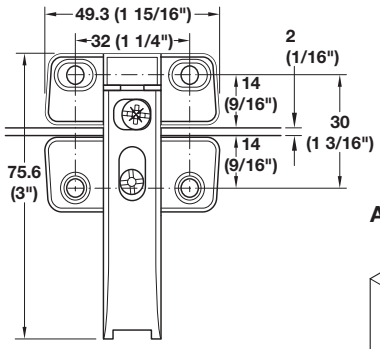

Adjustment Facility

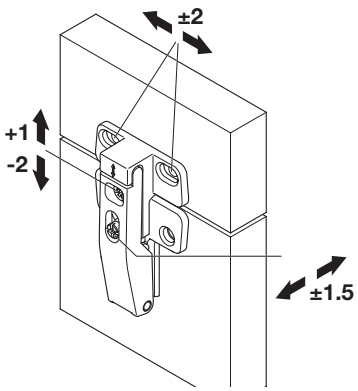

Finger Protection

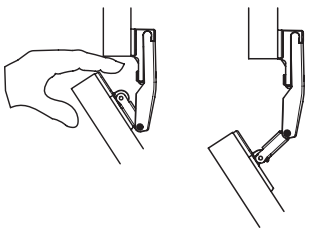

Dimensional data not binding. Dimensions in mm, inches are approximate. We reserve the right to alter specifications without notice.

Häfele Free Fold Planning

Front processing

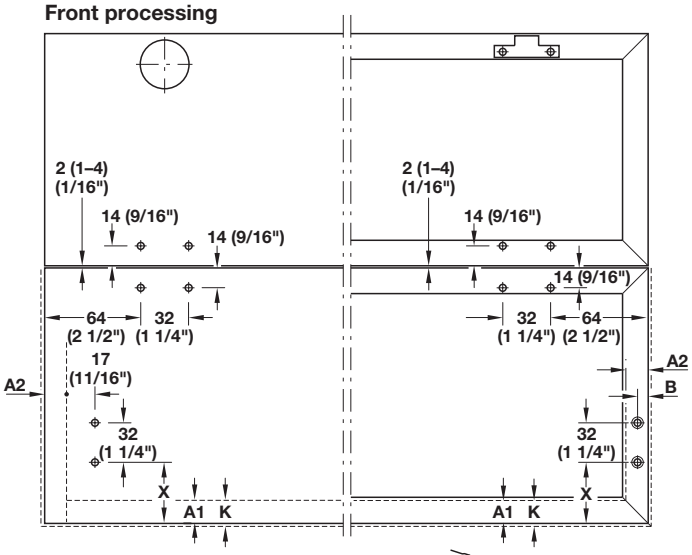

Drilling pattern for adapter for doors with 20 mm (13/16") aluminum frame.

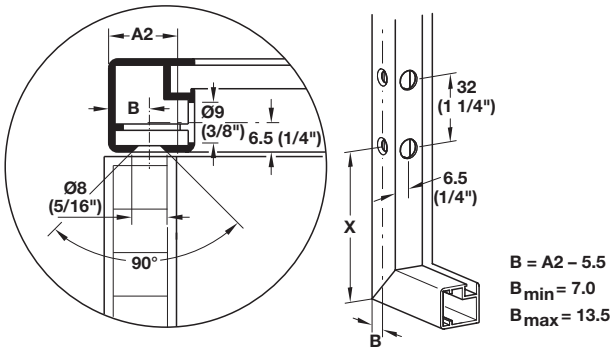

Power adjustment of fitting

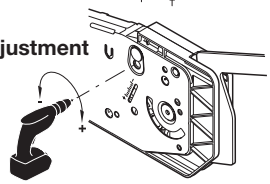

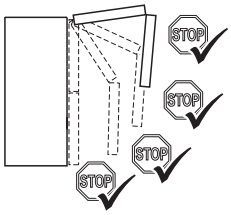

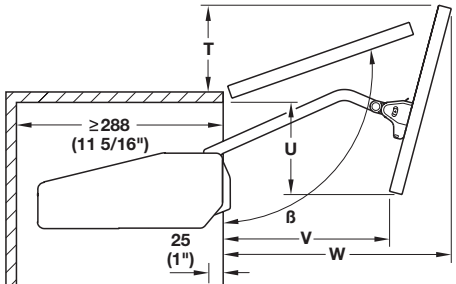

Drilling pattern for cabinet

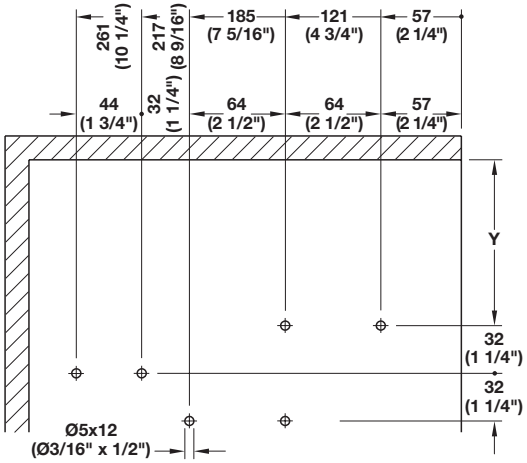

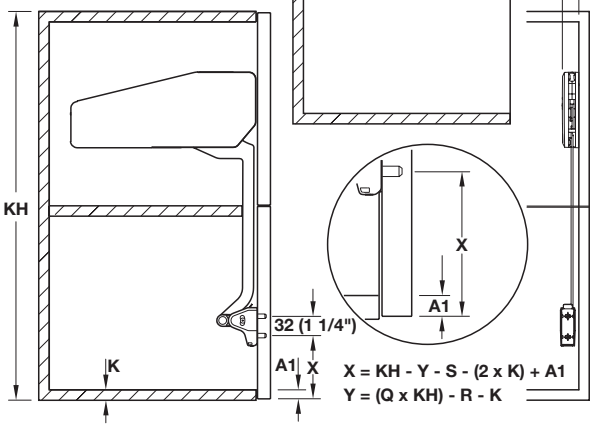

KH (cabinet height)	ß°	Q	R	S	T	U	V	W
580–650 (22 13/16"–25 9/16")	≈108–95	1.2	589 (23 1/8")	377 (14 13/16")	119–40 (4 11/16"–1 5/8")	126–197 (5"–7 3/4")	227–207 (8 15/16"–8 1/8")	375–430 (14 3/4"–17")
650–730 (25 9/16"–28 3/4")	≈107–94	1.2	664 (26 1/8")	409 (16 1/8")	124–38 (4 13/16"–1 1/2")	147–224 (5 13/16"–8 13/16")	238–215 (9 3/8"–8 1/2")	411–470 (16 3/16"–18 1/2")
710–790 (27 15/16"–31 1/8")	≈108–95	1.2	736 (29")	439 (17 1/4")	136–46 (5 3/8"–1 13/16")	161–233 (6 5/16"–9 3/16")	250–219 (9 13/16"–8 5/8")	439–500 (17 1/4"–19 11/16")
770–840 (30 5/16"–33 1/16")	≈108–95	1.0	644 (25 3/8")	467 (18 3/8")	146–43 (5 3/4"–1 11/16")	179–223 (7 1/16"–8 3/4")	267–200 (10 1/2"–7 7/8")	466–527 (18 5/16"–20 3/4")
840–910 (33 1/16"–35 13/16")	≈108–98	1.2	882 (34 3/4")	501 (19 3/4")	154–70 (6 1/16"–2 3/4")	195–248 (7 11/16"–9 3/4")	272–231 (10 11/16"–9 1/16")	502–559 (19 3/4"–22")
910–970 (35 13/16"–38 3/16")	≈107–98	1.1	865 (34")	533 (21")	160–78 (6 51/16"–3 1/16")	214–246 (8 7/16"–9 11/16")	282–225 (11"–8 7/8")	536–588 (21 1/8"–23 1/8")
960–1010 (35 13/16"–38 3/16")	≈107–100	1.1	915 (36")	557 (21 7/8")	170–99 (6 11/16"–3 7/8")	228–251 (9"–9 7/8")	295–240 11 5/8"–9 7/16")	560–605 (22 1/16"–23 13/16")
1000–1067 (39 3/8"–42")	≈107–102	1.1	954 (37 9/16")	576 (22 11/16")	177–120 (6 15/16"–4 3/4")	239–256 (9 7/16"–10 1/16")	306–256 (12"–10 1/6")	578–616 (22 3/4"–24 1/4")

Dimensional data not binding. Dimensions in mm, inches are approximate. We reserve the right to alter specifications without notice.

Häfele Free Fold Short

> For 2-piece wood or aluminum frame doors of equal size
> Minimum cabinet depth: 270 mm (10 5/8")
> Shorter housing depth is beneficial in inset applications
> Even high front panels can be lifted up in a space-saving way
> Modern design with clear-cut contours.
> Minimum opening resistance, multi-position stop function and soft opening and soft closing mechanism for ease in operation
> Time-saving assembly provided by tabs, pre-mounted Euro screws and clip mounting of front panel.
> Adjustment facility: Height/side/depth of top panel (via concealed hinge) and lower panel (via connecting hinge), holding power (via fitting).
> Material: Fitting: Plastic, Steel; Finish: nickel-plated
Cover Cap: Plastic; Finish: gray

→ Double Door Lift-up Fitting

Combined door height	Combined door weight lbs.	Model	Item No.
580–650 (22 13/16"–25 9/16")	8.8–18.7	E3fs	372.38.532
650–730 (25 9/16"–28 3/4")	15.4–25.9	F4fs	372.38.543
	22.4–37.8	F5fs	372.38.544
710–790 (27 15/16"–31 1/8")	13.4–23.7	G4fs	372.38.553
	18.7–31.7	G5fs	372.38.554
770–840 (30 5/16"–33 1/16")	11.2–21.5	H4fs	372.38.563
	16.5–31	H5fs	372.38.564
840–910 (33 1/16"–35 13/16")	15.1–26.8	I5fs	372.38.574
910–970 (35 13/16"–38 3/16")	10.3–17.6	J4fs	372.38.583
	14–25.3	J5fs	372.38.584
	19.6–37	J6fs	372.38.585
1000–1067 (39 3/8"–42")	12.5–22.2	L5fs	372.38.599
	20–35.4	L6fs	372.38.597

Supplied With
2 Fittings (right/left)
Front mounting material for wood or wide aluminum frame doors
Installation instructions
Paper drilling template
2 Cover caps for fitting (right/left)

Note
Concealed hinges for mounting the door to the cabinet, connecting hinges and adapters for narrow aluminum frames (if applicable) must be ordered separately. The specified models apply to common door heights and weights. Shorter front panels with higher door weights and taller front panels with lower door weights can also be implemented in individual cases.

Adapters and connecting hinge page 9.136

Dimensional data not binding. Dimensions in mm, inches are approximate. We reserve the right to alter specifications without notice.

Häfele Free Fold Short Planning

Front processing

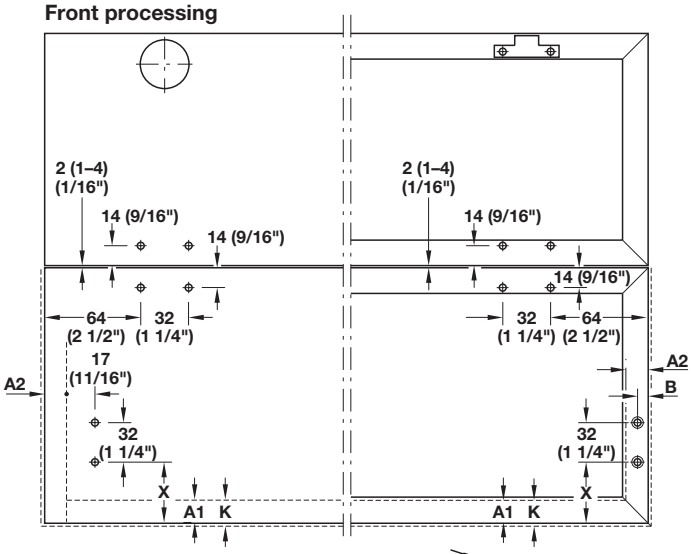

Drilling pattern for adapter for doors with 20 mm (13/16") aluminum frame.

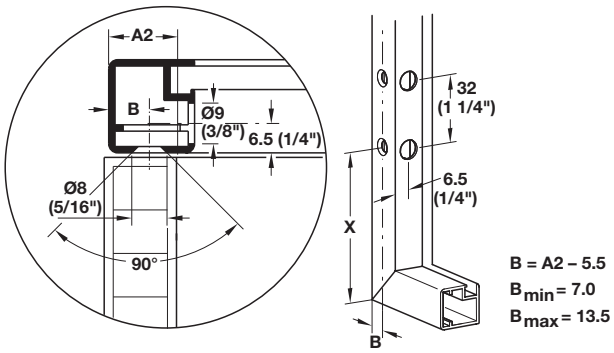

Power adjustment of fitting

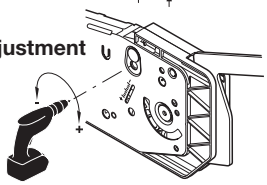

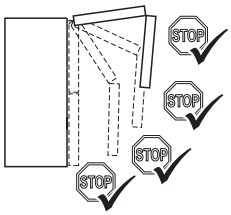

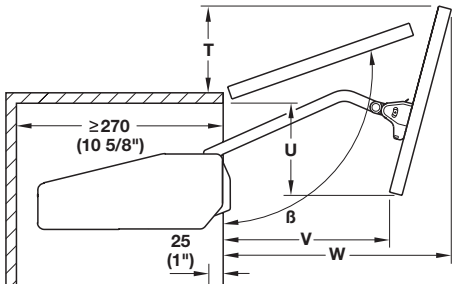

Drilling pattern for cabinet

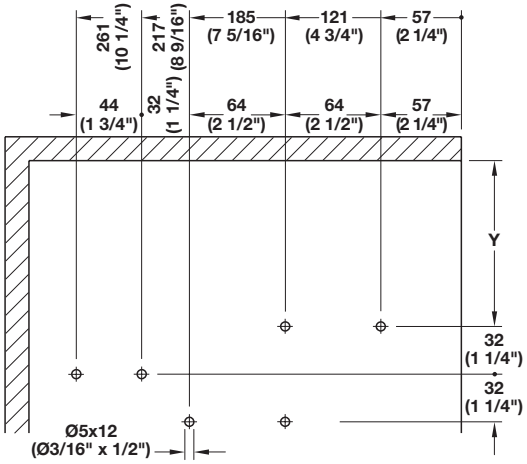

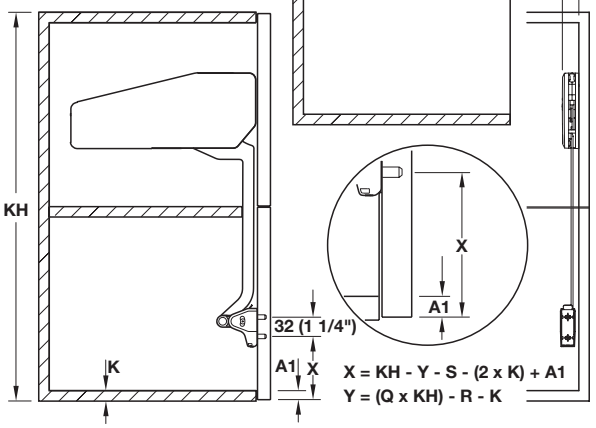

KH (cabinet height)	ß°	Q	R	S	T	U	V	W
580–650 (22 13/16"–25 9/16")	≈108–95	1.2	589 (23 1/8")	377 (14 13/16")	119–40 (4 11/16"–1 5/8")	126–197 (5"–7 3/4")	227–207 (8 15/16"–8 1/8")	375–430 (14 3/4"–17")
650–730 (25 9/16"–28 3/4")	≈107–94	1.2	664 (26 1/8")	409 (16 1/8")	124–38 (4 13/16"–1 1/2")	147–224 (5 13/16"–8 13/16")	238–215 (9 3/8"–8 1/2")	411–470 (16 3/16"–18 1/2")
710–790 (27 15/16"–31 1/8")	≈108–95	1.2	736 (29")	439 (17 1/4")	136–46 (5 3/8"–1 13/16")	161–233 (6 5/16"–9 3/16")	250–219 (9 13/16"–8 5/8")	439–500 (17 1/4"–19 11/16")
770–840 (30 5/16"–33 1/16")	≈108–95	1.0	644 (25 3/8")	467 (18 3/8")	146–43 (5 3/4"–1 11/16")	179–223 (7 1/16"–8 3/4")	267–200 (10 1/2"–7 7/8")	466–527 (18 5/16"–20 3/4")
840–910 (33 1/16"–35 13/16")	≈108–98	1.2	882 (34 3/4")	501 (19 3/4")	154–70 (6 1/16"–2 3/4")	195–248 (7 11/16"–9 3/4")	272–231 (10 11/16"–9 1/16")	502–559 (19 3/4"–22")
910–970 (35 13/16"–38 3/16")	≈107–98	1.1	865 (34")	533 (21")	160–78 (6 51/16"–3 1/16")	214–246 (8 7/16"–9 11/16")	282–225 (11"–8 7/8")	536–588 (21 1/8"–23 1/8")
960–1010 (35 13/16"–38 3/16")	≈107–100	1.1	915 (36")	557 (21 7/8")	170–99 (6 11/16"–3 7/8")	228–251 (9"–9 7/8")	295–240 11 5/8"–9 7/16")	560–605 (22 1/16"–23 13/16")
1000–1067 (39 3/8"–42")	≈107–102	1.1	954 (37 9/16")	576 (22 11/16")	177–120 (6 15/16"–4 3/4")	239–256 (9 7/16"–10 1/16")	306–256 (12"–10 1/6")	578–616 (22 3/4"–24 1/4")

Dimensional data not binding. Dimensions in mm, inches are approximate. We reserve the right to alter specifications without notice.

Häfele Free Fold Short Accessories

→ Adapter - For Aluminum Framed Doors

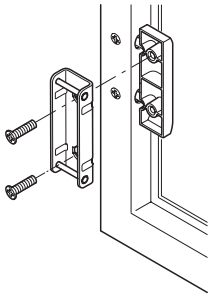

> For doors with 20 mm (13/16") aluminum frame
> Material: Zinc Alloy

Finish	Item No.
nickel-plated	372.37.044

Supplied with
Mounting material

→ Connecting Hinge

> For wood and aluminum frame doors from frame width 20 mm (13/16")
> Mounts with wood screw
> With finger protection function
> Installed with chipboard screws
> Adjustment facility: 3-dimensional
side adjustment: ±2 mm;
gap adjustment: –2 to +1 mm;
depth adjustment: ±1.5 mm
> Material: Zinc Alloy

Finish	Item No.
nickel-plated	372.64.796

Note
The hinge comes apart when fingers get trapped unintentionally in the gap of the door.

Drilling Pattern

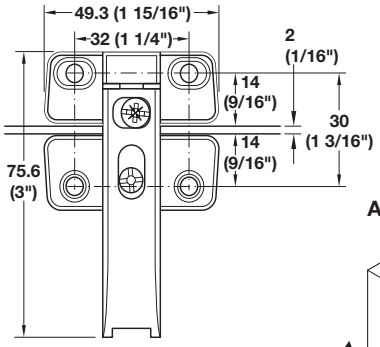

Adjustment Facility

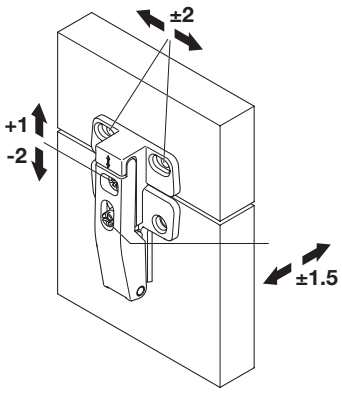

Finger Protection

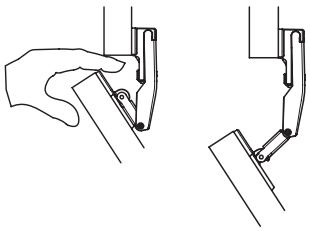

Dimensional data not binding. Dimensions in mm, inches are approximate. We reserve the right to alter specifications without notice.

Häfele Drilling Jigs

→ Drilling Jig for Free Up, Side Wall

> W x D x H: 31 x 4 x 16 mm (1 1/4" x 5/32" x 5/8")
> Material: Plexiglass, clear

Item No.
372.33.050

→ Drilling Jig for Free Swing, Side Wall

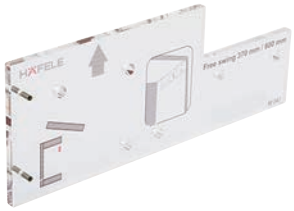

> W x D x H: 31 x 5 x 13 mm (1 1/4" x 3/16" x 1/2")
> Material: Plexiglass, clear

Item No.
372.34.050

→ Drilling Jig for Free Fold, Side Wall

> W x D x H: 31 x 4 x 13 mm (1 1/4" x 5/32" x 1/2")
> Material: Plexiglass, clear

Item No.
372.37.050

→ Drilling Jig for Front Panel Brackets

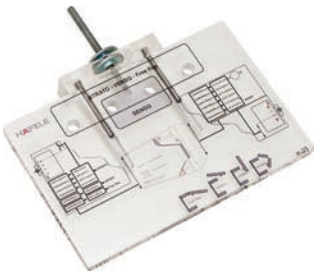

> For all versions of Free Flap
> W x D x H: 20 x 4 x 19 mm (13/16" x 5/32" x 3/4")
> Material: Plexiglass, clear

Item No.
372.64.893

Note
Order self centering drill bit for Ø 3 mm (1/8") or Ø 5 mm (3/16") drill hole separately, to the right.

→ Drilling Jig for Free Flap 1.7 and 3.15

> W x D x H: 21 x 3 x 16 mm (7/8" x 1/8" x 5/8")
> Material: Plexiglass, clear

Finish	Item No.
nickel-plated	372.91.023

Supplied with
Mounting instructions

Note
Order self centering drill bit for Ø 3 mm (1/8") or Ø 5 mm (3/16") drill hole separately, below.

→ Self Centering Drill Bit

> For exact drilling of drill holes with using drilling jigs
> Material: Steel

Ø	Item No.
3 (1/8")	001.25.791
5 (3/16")	001.25.792

Dimensional data not binding. Dimensions in mm, inches are approximate. We reserve the right to alter specifications without notice.

Häfele Duo

> Can be used as a lid or flap stay
> For wood or aluminum framed doors
> Adjusting the arms (overshear) turns the lid stay into a flap stay
> Less space is required inside the cabinet
> Wear-resistant friction coupling with large adjusting range
> Material: Zinc Alloy

Finishes
Black, nickel-plated, white

Front adjustment facility

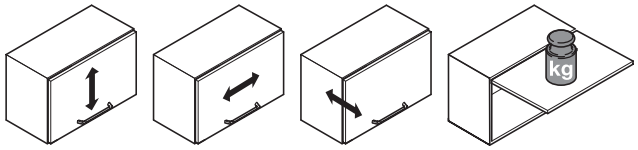

*Height adjustment | *Side adjustment | *Tilt adjustment | Holding power adjustment with SW4 Hex key

Note
*Depends on the hinges that are installed.

Application

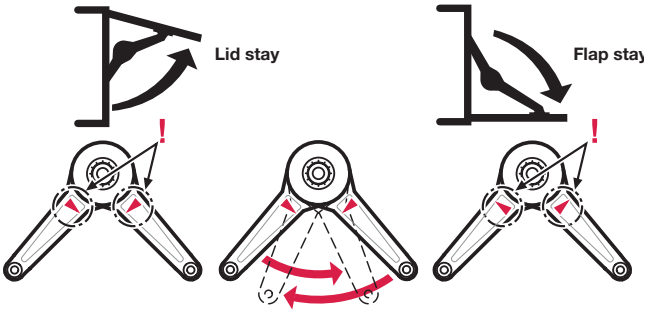

Stronger holding power
= **locking** function
= flap locks in any position (multi-position stop)

Weaker holding power
= **braking** function
= lid stay closes softly/flap stay opens gently

Lateral space requirement/side distance(s) for screw bracket

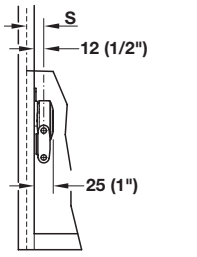

S = 12 + door overlay

Minimum installation depth

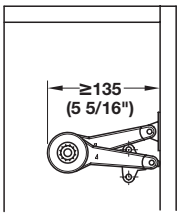

Duo Standard

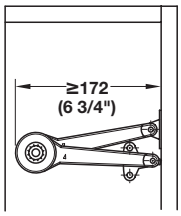

Duo Forte

Dimensional data not binding. Dimensions in mm, inches are approximate. We reserve the right to alter specifications without notice.

Häfele Duo Standard

→ Complete Set

Flat Head #6

VARIANTA ⌀5

> For wood or aluminum framed doors
> From frame width: 45 mm (1 3/4")
> Edge distance: 37 mm (1 7/16")
> Door width: max. 600 mm (25 5/8")

Installation	nickel-plated	white	black
Wood screws	373.66.612	373.66.262	373.66.212
Euro screws	373.66.614	373.66.264	373.66.214

For doors with aluminum frame

> From frame width: 20 mm (13/16")
> Edge distance: 37 mm (1 7/16")
> Finish: nickel-plated

Installation	Item No.
Sheet metal screws	373.66.622

Supplied With Lid stay, Mounting bracket for cabinet, Screw mount bracket for flap

Important Note Mounting location dimensions below are critical for this fitting to perform properly

Installation as lid stay

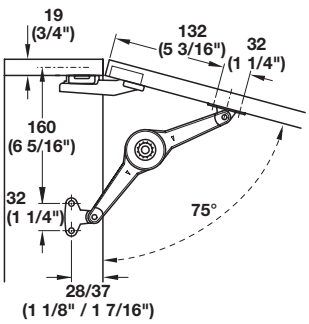

Opening angle 75°

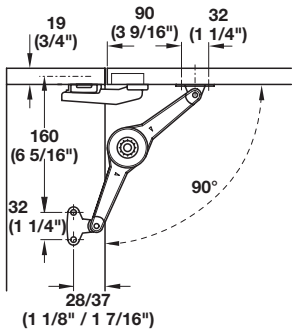

Opening angle 90°

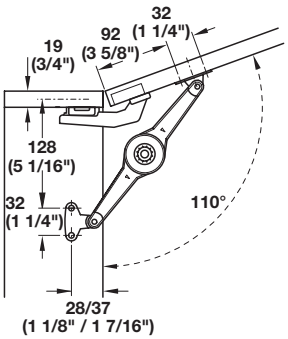

Opening angle 110°

Lateral space requirement/side distance(s) for screw bracket

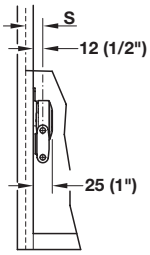

S = 12 + door overlay

Installation as flap stay

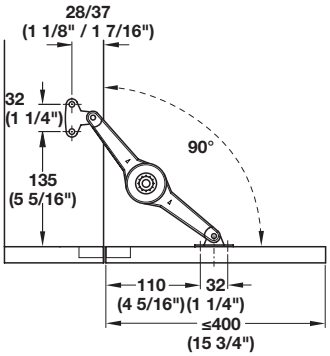

Separate catch required. Space requirement for fitting inside the cabinet when the door is being closed: 130 mm (5 1/8") from front edge of cabinet

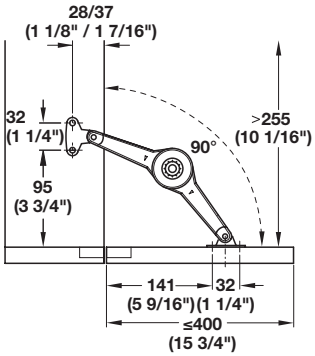

No separate catch required.

Minimum inside cabinet height 255 mm (10 1/16")

Sample measurements table for max. flap weight. Always use two fittings when used as flap stay. Include weight of handles.

Door height	max. flap weight lbs.			
	Stopping function		Braking function	
	1 Stay	2 Stays	1 Stay	2 Stays
For opening angle 75°				
254 (10")	15.4 lbs.	33 lbs.	19.8 lbs.	33 lbs.
305 (12")	13.2 lbs.	26.4 lbs.	16.5 lbs.	33 lbs.
356 (14")	11 lbs.	22 lbs.	14.3 lbs.	28.6 lbs.
406 (16")	9.9 lbs.	19.8 lbs.	13.2 lbs.	25.3 lbs.
457 (18")	8.8 lbs.	17.6 lbs.	11 lbs.	22 lbs.
508 (20")	7.7 lbs.	15.4 lbs.	9.9 lbs.	19.8 lbs.
For opening angle 90° - See 90° Flap Stay for 8"–16"				
457 (18")	7.7 lbs.	14.3 lbs.	9.9 lbs.	18.7 lbs.
508 (20")	6.6 lbs.	13.2 lbs.	8.8 lbs.	16.5 lbs.
For opening angle 110°				
203 (8")	13.2 lbs.	26.4 lbs.	17.6 lbs.	33 lbs.
254 (10")	11 lbs.	20.9 lbs.	13.2 lbs.	26.4 lbs.
305 (12")	8.8 lbs.	17.6 lbs.	11 lbs.	22 lbs.
356 (14")	7.7 lbs.	15.4 lbs.	8.8 lbs.	19.8 lbs.
406 (16")	6.6 lbs.	13.2 lbs.	8.8 lbs.	16.5 lbs.
457 (18")	5.5 lbs.	12.1 lbs.	7.7 lbs.	15.4 lbs.
508 (20")	4.4 lbs.	11 lbs.	6.6 lbs.	13.2 lbs.
For opening angle 90° as a Flap Stay				
305 (12")	11 lbs.	22 lbs.	13.2 lbs.	28.6 lbs.
356 (14")	8.8 lbs.	18.7 lbs.	12.1 lbs.	24.2 lbs.
406 (16")	7.7 lbs.	15.4 lbs.	11 lbs.	22 lbs.

→ Hex Key, 4 mm (5/32")

> Material: Steel

Finish	Item No.
black	008.28.044

Dimensional data not binding. Dimensions in mm, inches are approximate. We reserve the right to alter specifications without notice.

Häfele Duo Forte

→ Complete Set

> For wood or aluminum framed doors
> From frame width: 45 mm (1 3/4")
> Edge distance: 37 mm (1 7/16")
> Door width: max. 600 mm (25 5/8")

Installation	nickel-plated	white	black
Wood screws	373.66.632	373.66.372	373.66.312
Euro screws	373.66.634	373.66.374	373.66.314

For doors with aluminum frame

> From frame width: 20 mm (13/16")
> Edge distance: 37 mm (1 7/16")
> Finish: nickel-plated

Installation	Item No.
Sheet metal screws	373.66.642

Supplied With Lid stay, Mounting bracket for cabinet, Screw-on bracket for flap

Important Note Mounting location dimensions below are critical for this fitting to perform properly

Installation as lid stay

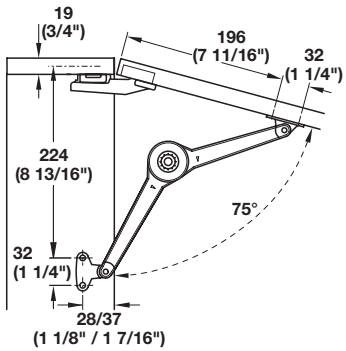

Opening angle 75°

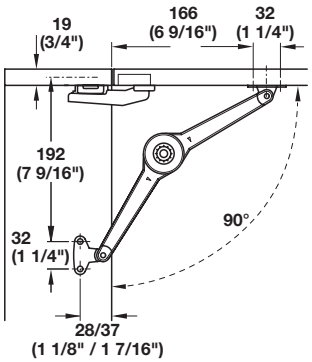

Opening angle 90°

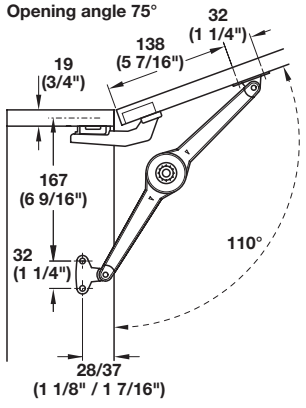

Opening angle 110°

Lateral space requirement/side distance(s) for screw bracket

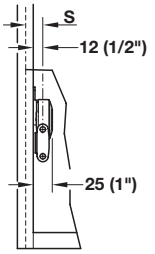

S = 12 + door overlay

Installation as flap stay

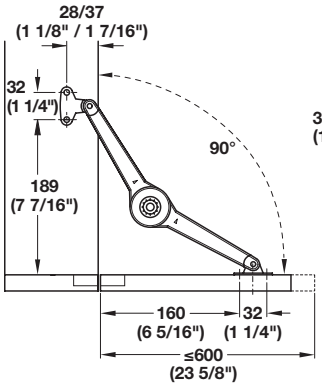

Separate catch required. Space requirement for fitting inside the cabinet when the door is being closed: 175 mm (6 7/8") from front edge of cabinet.

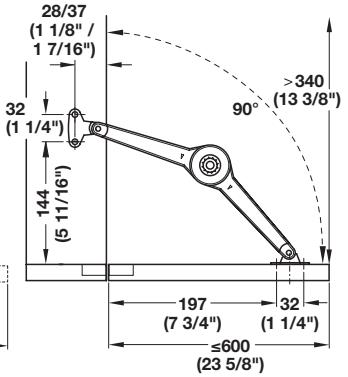

No separate catch required.

Minimum inside cabinet height 340 mm (13 3/8")

Sample measurements table for max. door weight. Always use two fittings when used as flap stay. Include height of handles.

Door height	max. flap weight lbs.			
	Stopping function		Braking function	
	1 Stay	2 Stays	1 Stay	2 Stays
For opening angle 75°				
305 (12")	19.8 lbs.	33 lbs.	26.4 lbs.	33 lbs.
356 (14")	17.6 lbs.	33 lbs.	24.2 lbs.	33 lbs.
406 (16")	15.4 lbs.	30.8 lbs.	19.8 lbs.	33 lbs.
457 (18")	13.2 lbs.	27.5 lbs.	17.6 lbs.	33 lbs.
508 (20")	12.1 lbs.	24.2 lbs.	15.4 lbs.	33 lbs.
559 (22")	11 lbs.	22 lbs.	14.3 lbs.	28.6 lbs.
610 (24")	11 lbs.	20.9 lbs.	13.2 lbs.	26.4 lbs.
660 (26")	8.8 lbs.	18.7 lbs.	12.1 lbs.	24.2 lbs.
711 (28")	8.8 lbs.	17.6 lbs.	11 lbs.	23.1 lbs.
For opening angle 90° – See 90° Flap Stay for 203–209 (8"–24")				
660 (26")	7.7 lbs.	15.4 lbs.	11 lbs.	20.9 lbs.
711 (28")	6.6 lbs.	15.4 lbs.	8.8 lbs.	19.8 lbs.
For opening angle 110°				
203 (8")	20.9 lbs.	33 lbs.	27.5 lbs.	33 lbs.
254 (10")	16.5 lbs.	33 lbs.	22 lbs.	33 lbs.
305 (12")	14.3 lbs.	27.5 lbs.	17.6 lbs.	33 lbs.
356 (14")	12.1 lbs.	24.2 lbs.	15.4 lbs.	30.8 lbs.
406 (16")	9.9 lbs.	20.9 lbs.	13.2 lbs.	27.5 lbs.
457 (18")	8.8 lbs.	18.7 lbs.	12.1 lbs.	24.2 lbs.
508 (20")	8.8 lbs.	16.5 lbs.	11 lbs.	22 lbs.
559 (22")	7.7 lbs.	15.4 lbs.	8.8 lbs.	19.8 lbs.
610 (24")	6.6 lbs.	13.2 lbs.	8.8 lbs.	17.6 lbs.
660 (26")	6.6 lbs.	12.1 lbs.	8.8 lbs.	16.5 lbs.
711 (28")	6.6 lbs.	11 lbs.	7.7 lbs.	15.4 lbs.
For opening angle 90° as a Flap Stay				
305 (12")	17.6 lbs.	33 lbs.	22 lbs.	33 lbs.
356 (14")	15.4 lbs.	29.7 lbs.	19.8 lbs.	33 lbs.
406 (16")	13.2 lbs.	26.4 lbs.	17.6 lbs.	33 lbs.
457 (18")	11 lbs.	24.8 lbs.	15.4 lbs.	30.8 lbs.
508 (20")	11 lbs.	20.9 lbs.	13.2 lbs.	26.4 lbs.
559 (22")	8.8 lbs.	18.7 lbs.	12.1 lbs.	24.2 lbs.
610 (24")	8.8 lbs.	17.6 lbs.	11 lbs.	22 lbs.

Dimensional data not binding. Dimensions in mm, inches are approximate. We reserve the right to alter specifications without notice.

Häfele Duo Standard/Duo Forte

→ Individual Fitting

> For left and right hand use
> Without tools (clip-on system) onto pre-mounted mounting bracket
> Adjustment facility: Holding power
> Material: Zinc Alloy

Model series	nickel-plated	white	black	silver
Standard	373.66.500	373.66.250	373.66.200	373.66.800
Forte	373.66.700	373.66.350	373.66.300	373.66.900

Supplied With
Lid stay
Mounting instructions

Note
Mounting brackets and screw-on bracket are not supplied. Please order separately.

→ Mounting Bracket for Cabinet

For edge distance 37 mm (1 1/2")

For edge distance 28 mm (1 1/8")

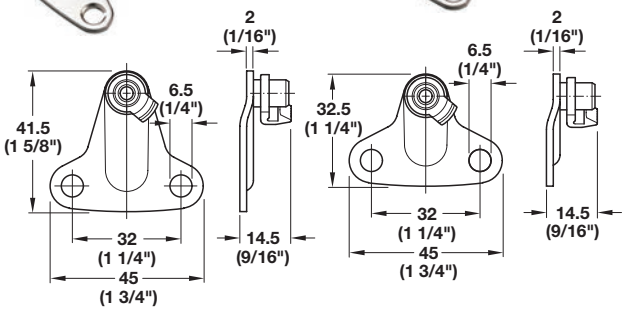

> For mounting the lid stay to the cabinet
> Material: Steel

For edge distance (cabinet)	nickel-plated	white	black	silver
28 (1 1/8")	373.66.693	373.66.395	373.66.393	373.66.993
37 (1 1/2")	373.66.694	373.66.396	373.66.394	373.66.994

→ Special Door Mounting Bracket

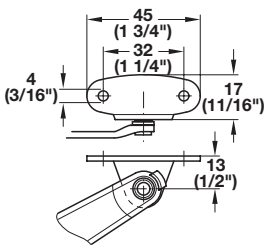

> For use with a face frame overlay 5-piece door
> Material: Steel

Finish	Item No.
nickel-plated	373.66.685

→ Mounting Bracket for Wood or Aluminum Frame Door

Wood Screws

Euro Screws

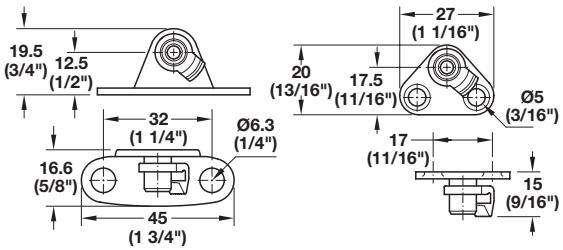

> Screw mounted
> For mounting the lid stay to the door
> From frame width: 45 mm (1 3/4")
> Material: Steel

Installation	nickel-plated	white	black	silver
Wood screws	373.66.681	373.66.384	373.66.381	373.66.981
Euro screws	373.66.036	373.66.386	–	–

→ Mounting Bracket for Aluminum Frame Door

> From frame width: 20 mm (13/16")

Installation	nickel-plated	white
Sheet metal screws	373.66.682	373.66.385

Dimensional data not binding. Dimensions in mm, inches are approximate. We reserve the right to alter specifications without notice.

Salice Wind Lift System

> Compact and elegant design
> Adjustable spring strength
> Mounts at the top of a frameless cabinet; block out for face frame
> Available in soft close or push to open
> Optional top mounting bracket
> Angle restrictor clip of 85d is included
> 94d opening without restrictor clip
> Inset doors are possible with 6 mm (1/4") shim on the side with 28 mm (1 1/8") max. door thickness 35 mm (1 3/8")
> Drilling of the door: 13 mm (1/2") deep
> Tab (K) distance: 3–7 mm (1/8"–9/32")
> Hardware and door easily installed with Salice snap-on technology
> 5 Independent adjustments all made with a pozi screwdriver:
- Height
- Side
- Depth
- Spring tension
- Soft close

> Material: Steel

Version	Spring force	Door height	Model	Item No.
Soft close	W (white/free)	219–400 (8 5/8"–15 3/4")	FRAKFEXWSN9	372.96.000
Soft close	D (yellow/free)	219–610 (8 5/8"–24")	FRAKFEXDSN9	372.96.001
Soft close	I (yellow)	319–610 (12 9/16"–24")	FRAKFEXISN9	372.96.002
Soft close	F (black)	319–610 (12 9/16"–24")	FRAKFEXFSN9	372.96.003
Soft close	S (red)	319-610 (12 9/16"–24")	FRAKFEXSSN9	372.96.004
Push open	W (white/free)	219–400 (8 5/8"–15 3/4")	FRAKFEPWSN9	372.96.010
Push open	D (yellow/free)	219–610 (8 5/8"–24")	FRAKFEPDSN9	372.96.011
Push open	I (yellow)	319–610 (12 9/16"–24")	FRAKFEPISN9	372.96.012
Push open	F (black)	319–610 (12 9/16"–24")	FRAKFEPFSN9	372.96.013
Push open	S (red)	319–610 (12 9/16"–24")	FRAKFEPSSN9	372.96.014

Supplied With
2 Hinge cups, 1 RH and 1 LH Lift mechanism, 1 RH and LH Cabinet base, 5 x 13 mm euro screws (#7 x 5/8" wood screws can also be used), Mounting Instructions

Note
Order covers separately.

→ Top Mount Bracket and Cover Set, optional

> Material: Steel/Plastic

Cover	Model	Item No.
gray	FRAUFEXXSNM	372.96.030
white	FRAUFEXXSN1	372.96.031
glossy white	FRAUFEXXSNQ	372.96.036
satin black	FRAUFEXXSN0	372.96.032
glossy black	FRAUFEXXSNN	372.96.033
steel	FRAUFEXXSNI	372.96.034
champagne	FRAUFEXXSNC	372.96.035

Supplied With 2 Brackets and 2 Covers

→ Covers

> Material: Cover: Plastic; Cover cap: Steel

Cover	Cover cap	Model	Item No.
gray	nickel-plated	SRXA78AMSNXXF	372.96.020
white	nickel-plated	SRXA78A1SNXXF	372.96.021
glossy white	nickel-plated	SRXA78AQSNXXF	372.96.026
satin black	titanium	SRXA78A0SNXXF	372.96.022
glossy black	titanium	SRXA78ANSNXXF	372.96.023
steel	nickel-plated	SRXA78AISNXXF	372.96.024
champagne	nickel-plated	SRXA78ACSNXXF	372.96.025

Supplied With
LH and RH Covers

Dimensional data not binding. Dimensions in mm, inches are approximate. We reserve the right to alter specifications without notice.

Salice Wind Lift System

Frameless Drilling Pattern

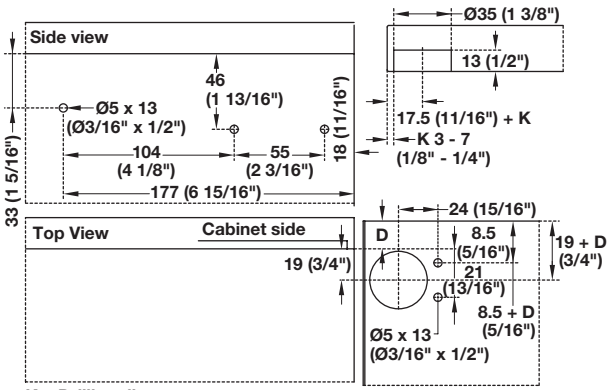

K = Drilling distance
D = Door overlay on the cabinet side

Space needed to open door

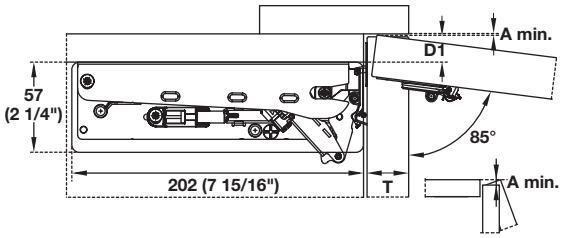

Minimum reveal table														
	T=	16	17	18	19	20	21	22	23	24	25	26	27	28
K=3	A=	0	0.1	0.1	0.2	0.2	0.3	0.5	0.6	0.7	0.9	1.1	1.8	2.7
K=4	A=	0	0.1	0.1	0.2	0.2	0.3	0.4	0.6	0.7	0.9	1.1	1.3	2.1
K=5	A=	0	0.1	0.1	0.2	0.2	0.3	0.4	0.6	0.7	0.9	1.1	1.3	1.5
K=6	A=	0	0.1	0.1	0.2	0.2	0.3	0.4	0.6	0.7	0.9	1.0	1.2	1.5
K=7	A=	0	0.1	0.1	0.2	0.2	0.3	0.4	0.6	0.7	0.8	1.0	1.2	1.4

Overlay table		
K		D1
3	=	16
4	=	17
5	=	18
6	=	19
7	=	20

K = Drilling distance
D1 = Door overlay on the cabinet top
A = Min Reveal

Face Frame Drilling Pattern

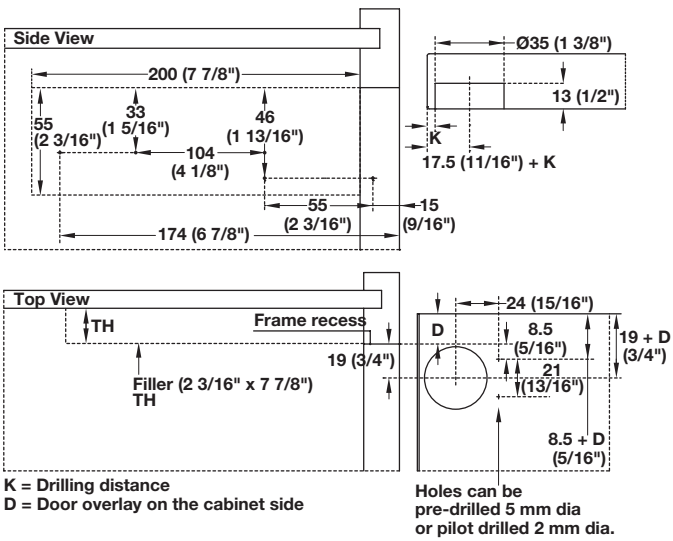

K = Drilling distance
D = Door overlay on the cabinet side

Holes can be
pre-drilled 5 mm dia
or pilot drilled 2 mm dia.

Wind "Footprint" dimensions: L x H x T: 196 x 57 x 38 mm
(7 3/4" x 2 1/4" x 1 1/2")

Space needed to open door

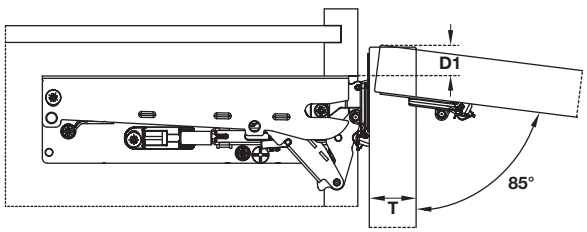

Overlay table		
K		D1
3	=	16
4	=	17
5	=	18
6	=	19
7	=	20

K = Drilling distance
D1 = Door overlay on the cabinet top

Dimensional data not binding. Dimensions in mm, inches are approximate. We reserve the right to alter specifications without notice.

Salice Wind Lift System

→ Salice Wind Charts and Spring Force Identification

Use the charts to determine the correct lift mechanism based on the door height and the door weight. When calculating the door weight you must include the weight of the decorative hardware. The maximum door width for two Wind lifts is 1200 mm (48").

Note
Wind can be used on doors that are larger or heavier by adding additional Wind lifts to the cabinet and door. This can be done by installing a center partition and adding additional Wind lifts

Spring Force W

Min door height - 219 mm (8 5/8")
Max door height - 400 mm (15 3/4")

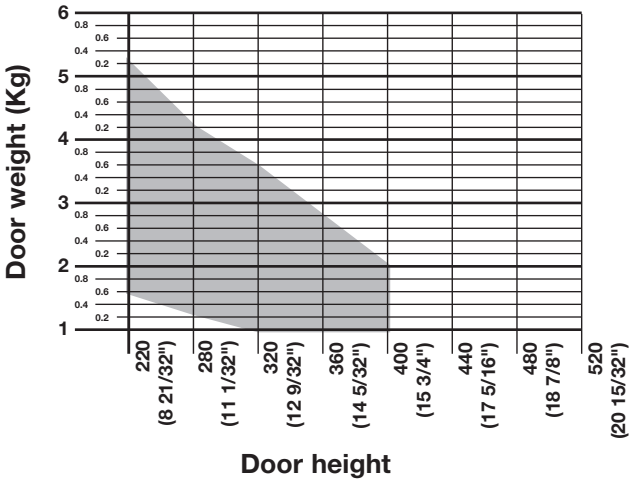

Spring Force D

Min door height - 219 mm (8 5/8")
Max door height - 610 mm (24")

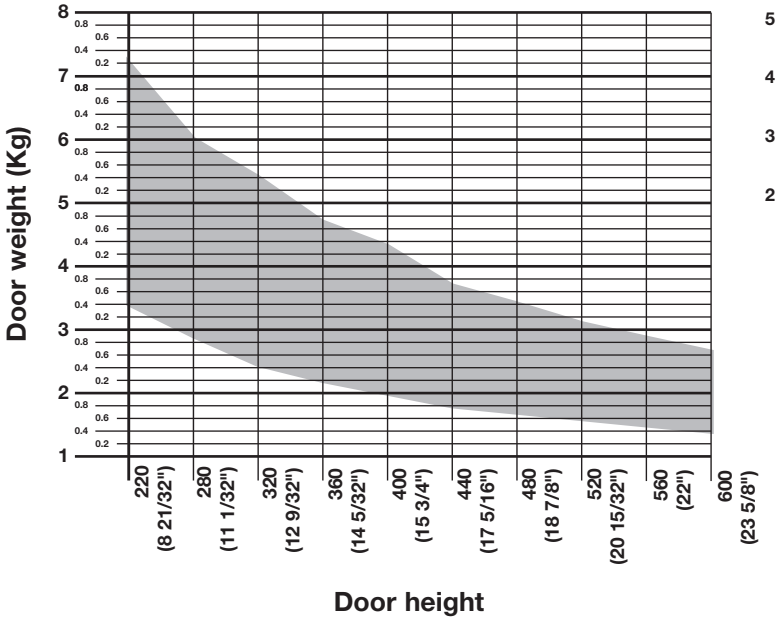

Spring Force I

Min door height - 319 mm (12 9/16")
Max door height - 610 mm (24")

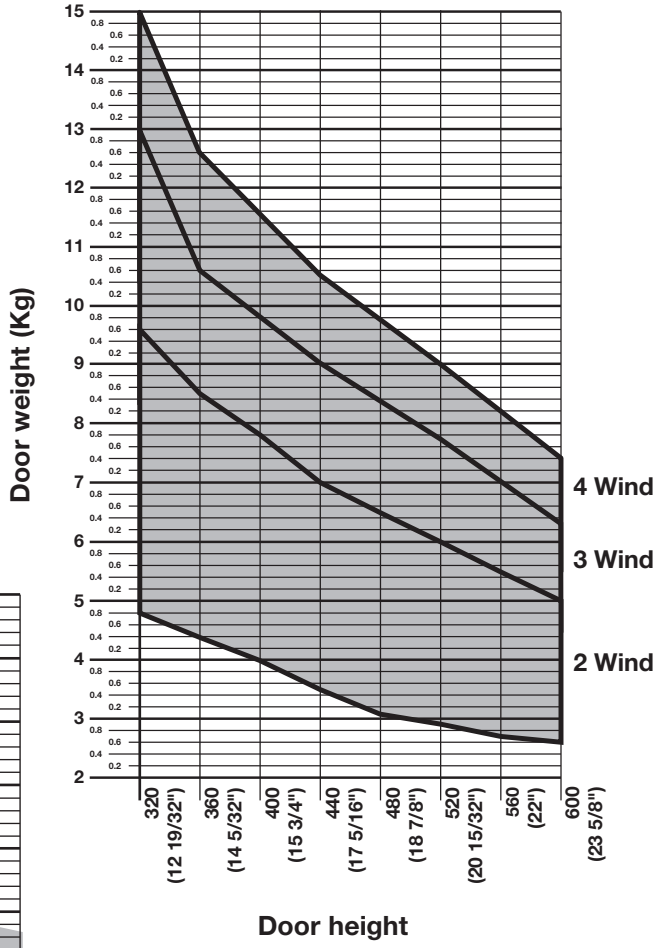

Dimensional data not binding. Dimensions in mm, inches are approximate. We reserve the right to alter specifications without notice.

Salice Wind Lift System

→ Salice Wind Charts and Spring Force Identification

Spring Force F

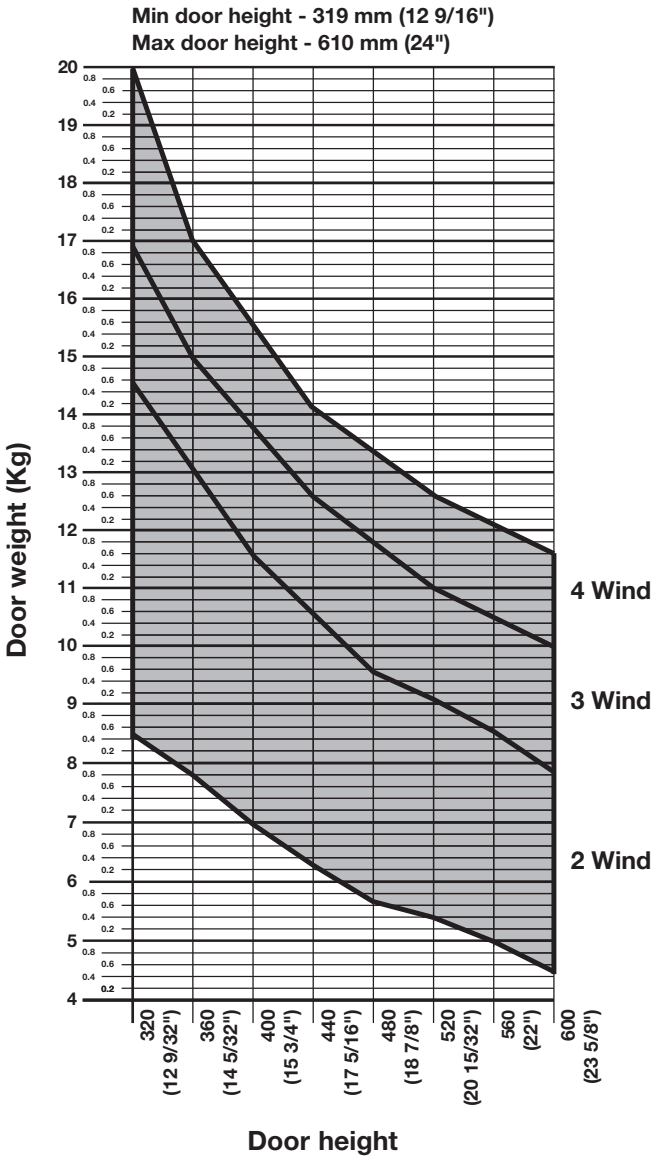

Spring Force S

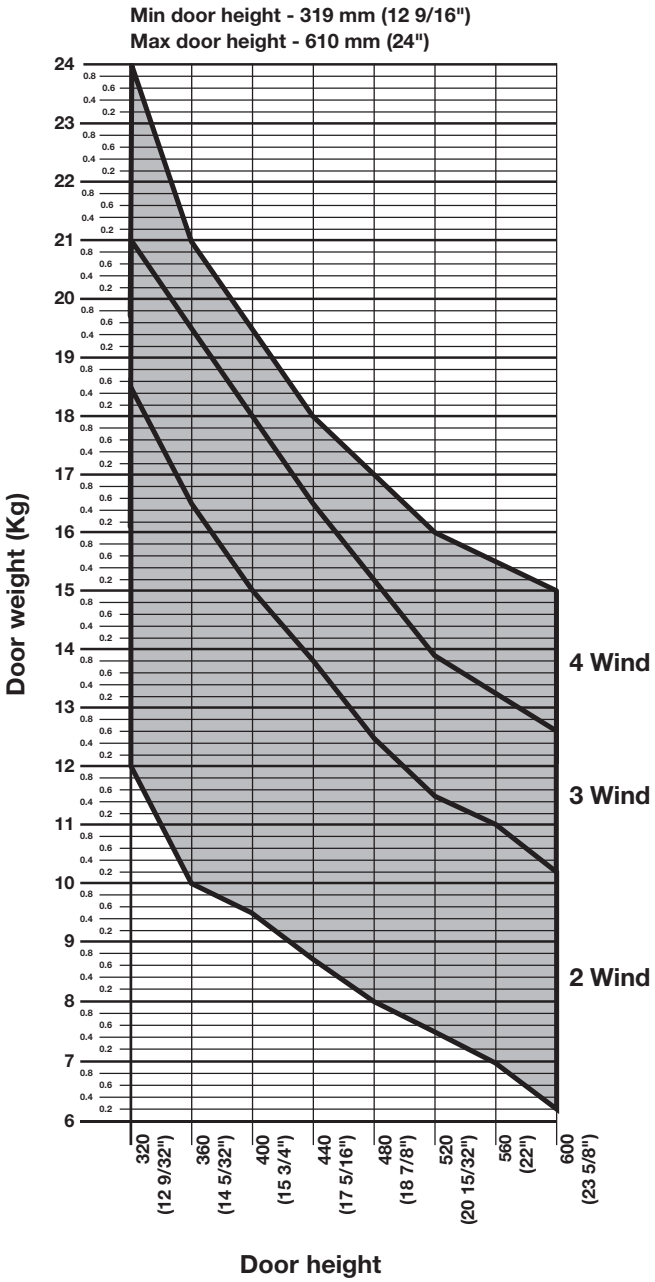

Dimensional data not binding. Dimensions in mm, inches are approximate. We reserve the right to alter specifications without notice.

Lid Stays

→ Firmatop Lid Stay

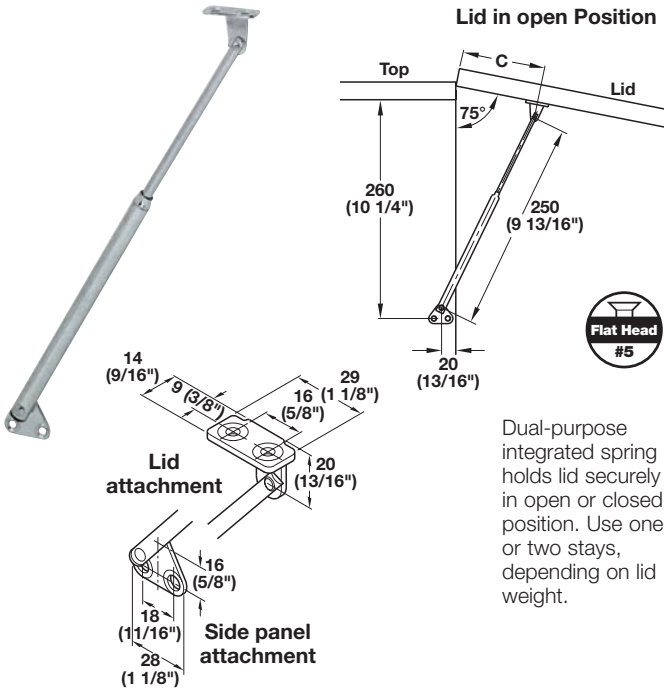

Dual-purpose integrated spring holds lid securely in open or closed position. Use one or two stays, depending on lid weight.

> With internal spring
> Reversible, can be installed left or right
> Material: Brass

Finish	Item No.
chrome-plated	373.58.919

Note Determine Dimension C by trial mounting.

→ Lid Stay

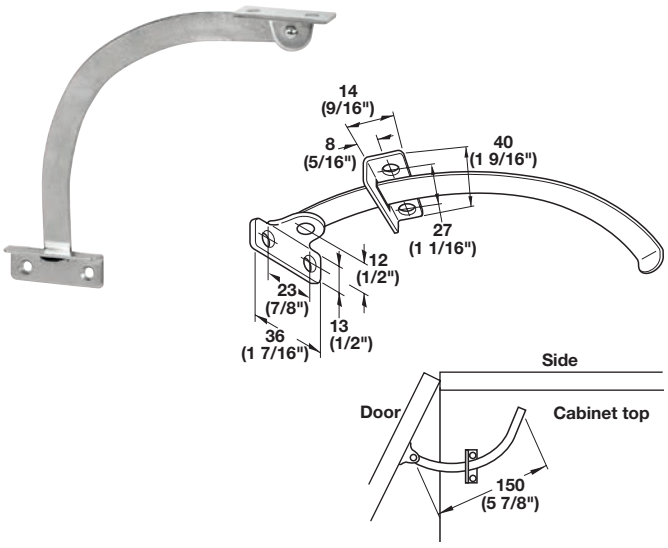

> Used as door restraint
> Material: Steel; Finish: nickel-plated

Handing	Item No.
Left	371.32.755
Right	371.32.700

Flat head screws pages 12.7-12.8, 12.10, 12.13

Dimensional data not binding. Dimensions in mm, inches are approximate. We reserve the right to alter specifications without notice.

Lid Stays

→ Fall-ex®

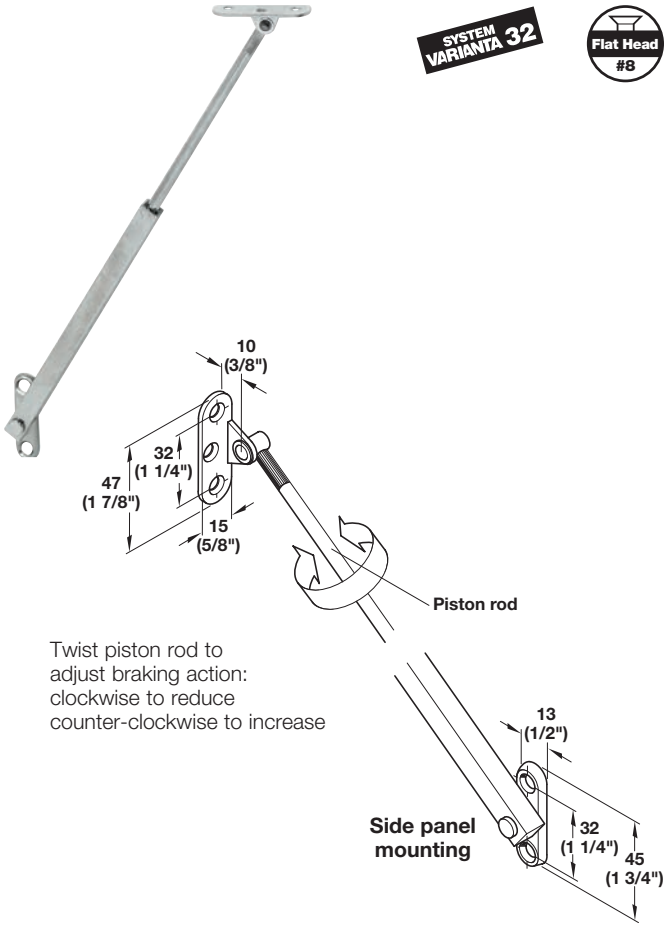

> Reversible, can be installed left or right
> Material: Steel; Finish: nickel-plated
Square tube: Brass

Length	Lid height	Dim. A	Item No.
250 (9 13/16")	up to 300 (11 13/16")	145 (5 11/16")	372.17.253
330 (13")	up to 450 (17 11/16")	185 (7 5/16")	372.17.262
465 (18 5/16")	over 450 (17 11/16")	255 (10 1/16")	372.17.271

Keep brake piston rod free of oil, grease and other contaminants at all times.

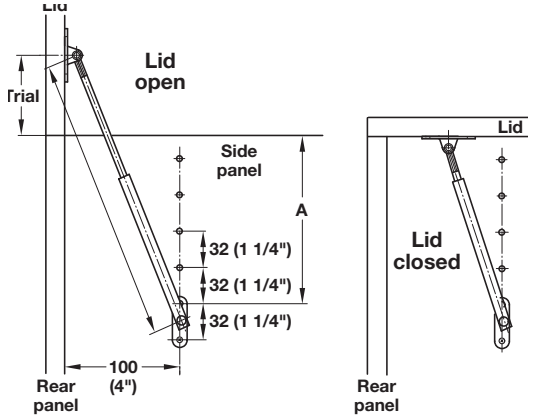

Flat head screws pages 12.7-12.8, 12.10, 12.13

Dimensional data not binding. Dimensions in mm, inches are approximate. We reserve the right to alter specifications without notice.

E-Z Open

- > For wood or aluminum doors
- > Can be used for a face frame application
- > Smooth motion and stopping
- > Secure holding in open and closed positions
- > 110° concealed hinges and mounting plates are required for installation
- > Material: Steel; Finish: silver

Opening angle: 110°

Door height	Door weight 2-3 kg. (5-7 lbs.)	3.5-4.5 kg. (8-10 lbs.)	5-6 kg. (11-13 lbs.)	6.5-9 kg. (14-20 lbs.)
254–305 (10–12")	373.71.901	373.71.901	373.71.901	373.71.902
330–380 (13–15")	373.71.901	373.71.901	373.71.901	-
406–457 (16–18")	373.71.901	373.71.901	373.71.902	-
483–533 (19–21")	373.71.901	373.71.902	-	-
559–610 (22–24")	373.71.901	373.71.902	-	-

The values indicated are guidelines only. Trial application is recommended. Guidelines are based on two lid stays per door.

Spring

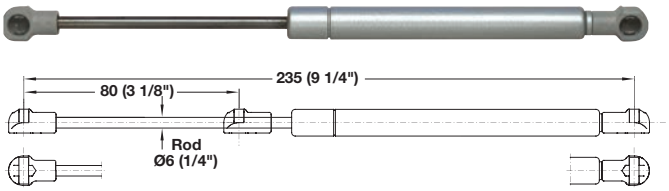

Door bracket

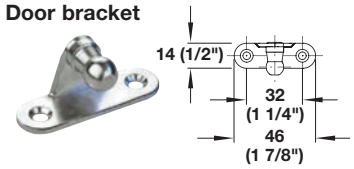

Cabinet bracket

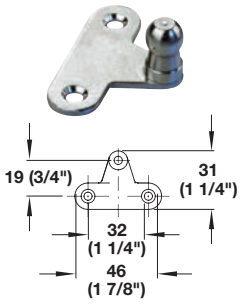

Frameless

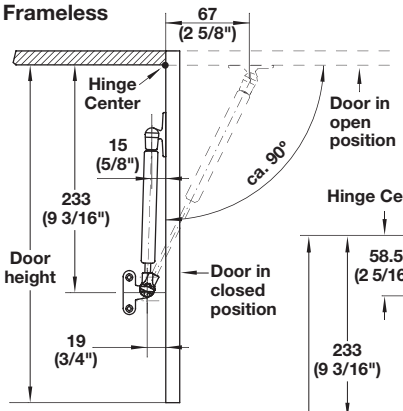

Face Frame

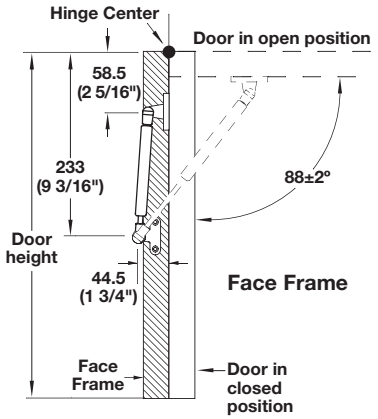

→ Lid Stay 100 N (22.5 lbs.)

- > For wood doors or aluminum frames of 35 mm (1 3/8") profile width or wider

	Item No.
	373.71.901

Supplied With
2 Springs
2 Cabinet brackets
2 Door brackets

→ Lid Stay 150 N (33.7 lbs.)

- > For wood doors or aluminum frames of 35 mm (1 3/8") profile width or wider

	Item No.
	373.71.902

Supplied With
2 Springs
2 Cabinet brackets
2 Door brackets

→ Door Mounting Bracket, optional

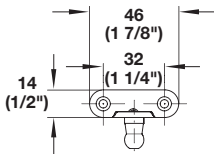

- > For aluminum frame profiles of less than 35 mm (1 3/8") wide

	Item No.
	373.70.900

Dimensional data not binding. Dimensions in mm, inches are approximate. We reserve the right to alter specifications without notice.

Häfele Automatic Opening Lid Stay

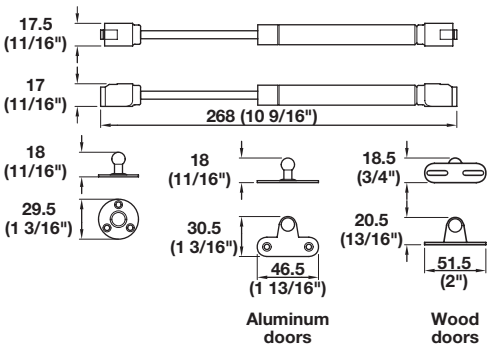

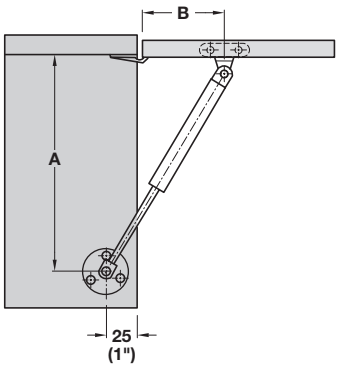

- > Gas piston
- > For wood and aluminum framed doors
- > Unhanded
- > For pneumatic support
- > Clip mounts on pre-mounted screw mounting brackets, no tools required
- > Material: Steel; Finish: silver color painted and chrome-plated
  Brackets: Steel; Finish: nickel-plated

Model	Item No.
60N	373.82.906
80N	373.82.907
100N	373.82.908
120N	373.82.909
150N	373.82.910

Supplied With
Cabinet mounting bracket
1 bracket each for wood and aluminum doors
Mounting screws
Mounting instructions

Sample measurements for mounting dimensions when using hinges for full overlay mounting.

Opening angle	A	B
75°	260 (10 1/4")	80 (3 1/8")
90°	238 (9 3/8")	80 (3 1/8")
110°	215 (8 9/16")	70 (2 3/4")

Sample measurements table
Maximum lid weight in pounds with 75° application

Spring force	Lid height/Door weight lbs.			
N	305 (12")	406 (16")	508 (20")	610 (24")
60 (13 lbs.)	4.4	3.3	2.6	2.2
80 (18 lbs.)	6	4.4	3.5	3
100 (22 lbs.)	7.4	5.7	4.4	4
120 (26 lbs.)	9	6.8	5.5	4.4
150 (33 lbs.)	10.3	7.7	6.3	4.6

Maximum lid weight in pounds with 90° application

Spring force	Lid height/Door weight lbs.			
N	305 (12")	406 (16")	508 (20")	610 (24")
60 (13 lbs.)	4	2.8	2.4	2
80 (18 lbs.)	5.2	4	3	2.6
100 (22 lbs.)	6.6	4.8	4	3.3
120 (26 lbs.)	7.9	6	4.6	4
150 (33 lbs.)	10.3	7	5	4.6

Maximum lid weight in pounds with 110° application

Spring force	Lid height/Door weight lbs.			
N	305 (12")	406 (16")	508 (20")	610 (24")
60 (13 lbs.)	3.5	2.6	2	1.7
80 (18 lbs.)	4.6	3.5	2.6	2.2
100 (22 lbs.)	5.7	4.1	3.5	2.8
120 (26 lbs.)	6.8	5	4.1	3.5
150 (33 lbs.)	7.7	5.7	4.8	4.1

Note
This table applies to one gas piston. The weight capacity doubles when using 2 pistons. It is recommended to use 2 gas pistons for parallel and synchronized opening of large lids.

Dimensional data not binding. Dimensions in mm, inches are approximate. We reserve the right to alter specifications without notice.

304 Stainless Steel Lid Stays

> Unhanded
> Only one stay required per lid
> Holds lid in the open position
> Lift up lid to release
> Weight capacity: max. 15 kg (33 lbs.)/stay
> Material: 304 Stainless Steel, satin

→ Stay

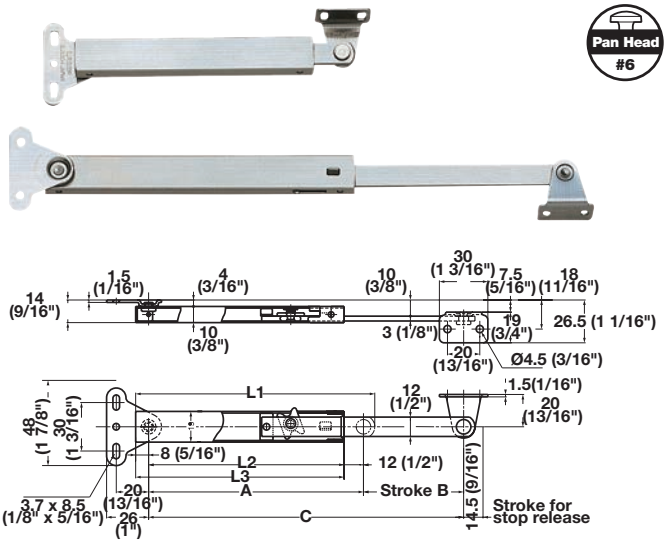

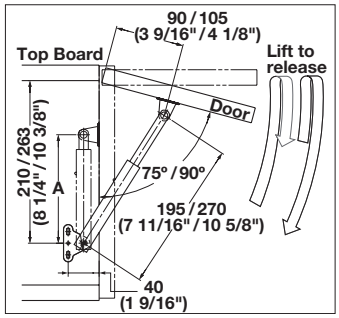

( ) Dimension...L-270
Max. opening degree
L-195: 75°, L-270: 90°

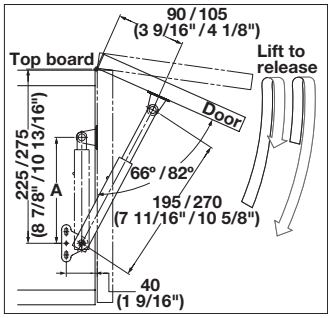

( ) Dimension...L-270
Max. opening degree
L-195: 66°, L-270: 82°

C	L1	L2	L3	A	B	Door height	Item No.
195 (7 11/16")	148 (5 13/16")	121 (4 3/4")	129 (5 1/16")	133 (5 1/4")	62 (2 7/16")	250–350 (9 13/16–13 3/4")	373.89.000
270 (10 5/8")	185 (7 5/16")	158 (6 1/4")	166 (6 9/16")	170 (6 11/16")	100 (3 15/16")	320–500 (12 5/8–19 11/16")	373.89.001

→ Stay with Lock

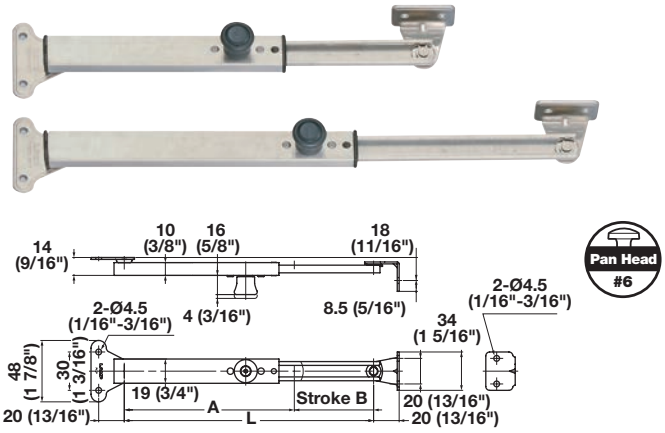

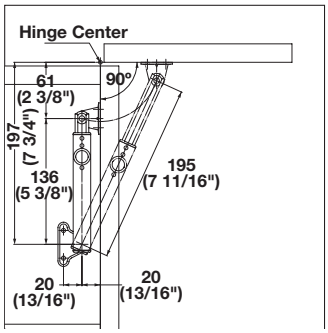

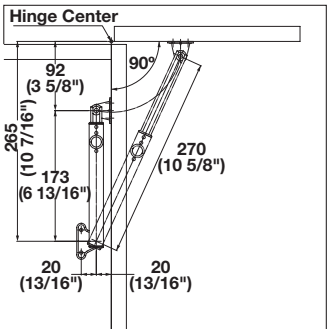

L	A	B	Item No.
195 (7 11/16")	133 (5 1/4")	62 (2 7/16")	373.89.010
270 (10 5/8")	170 (6 11/16")	100 (3 15/16")	373.89.011

Dimensional data not binding. Dimensions in mm, inches are approximate. We reserve the right to alter specifications without notice.

Lid Stays

→ Lid Stay

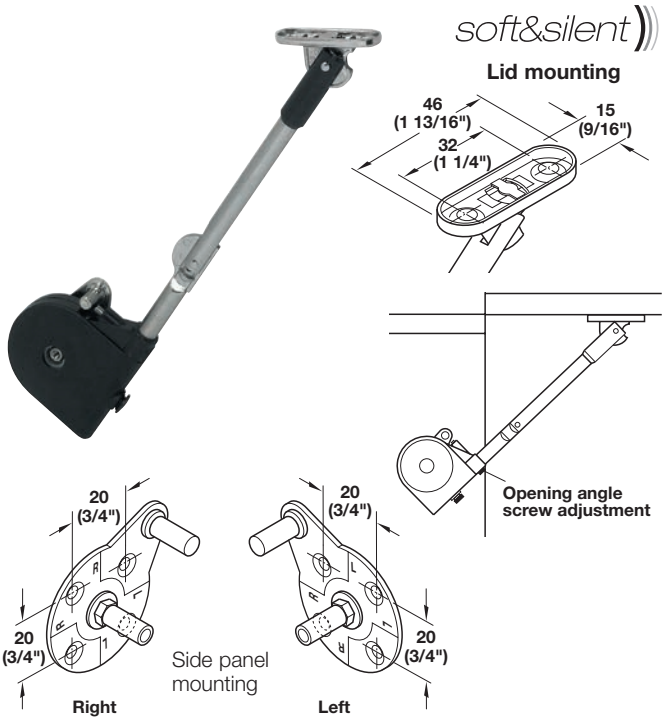

> Lid bracket attachment
> Reversible, can be installed left or right
> Material: Plastic/Steel; Finish: nickel-plated

Color	Item No.
black	365.31.300
white	365.31.700

Supplied With
Mounting screws

Opening angle: 80° - 100°

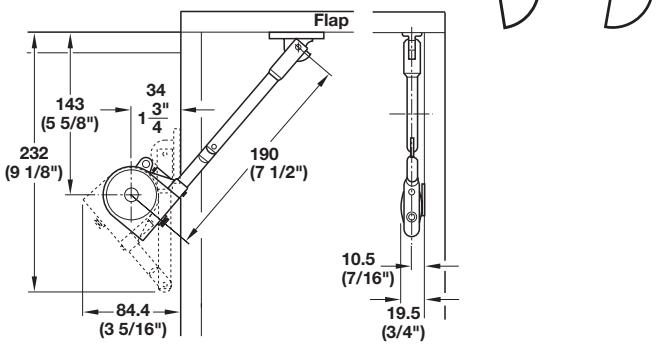

→ Lid Stay

soft&silent

Opening angle: 90°

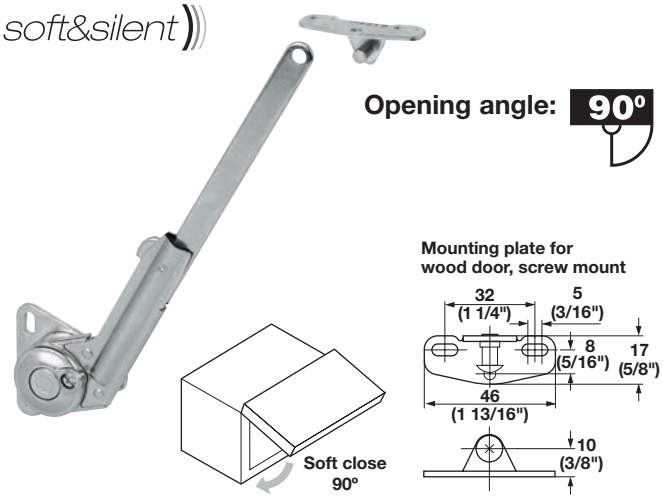

> For upward-opening door with piano, butt, or concealed hinges
> Designed to hold door in fully opened position
> Speed adjustment screw located on the front for easy adjustment
> Torque calculation:
Torque = door height x 1/2 x door weight
Per piece: 20~70 kg/cm (19~60 lbs./inch)
Per pair: 40~140 kg/cm (38~120 lbs./inch)
> Material: Steel; Finish: nickel-plated

Handing	Item No.
Left	365.31.681
Right	365.31.680

Supplied With
Mounting screws

Opening angle	Hinge type	A	B	C	D	E	F
90°	Concealed	98 (3 7/8")	97-S (3 13/16")	113-S (4 7/16")	-	-	12 (1/2")
	Piano/butt	91.5 (3 5/8")	-	-	90.5 (3 9/16")	106.5 (4 3/16")	

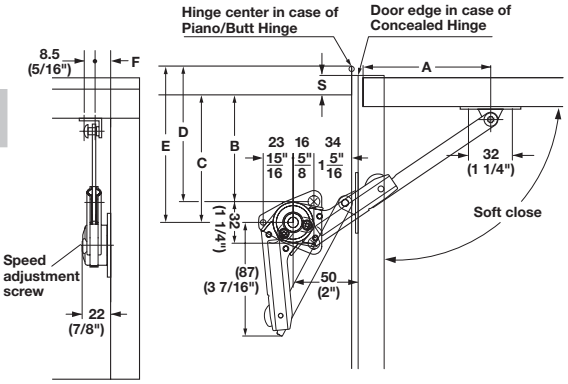

Dimensional data not binding. Dimensions in mm, inches are approximate. We reserve the right to alter specifications without notice.

Swingtop II

> Doors swing up automatically when lifted and are securely held open
> Self operating from 17°
> The spring action holds doors tight when closed
> Adjustable
> With adjustable spring
> Material: Steel, epoxy-coated
Spring: Steel
Stop: Plastic; Finish: white

→ For Wood Doors

Adjustable opening angle

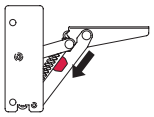

Opening angle 90°

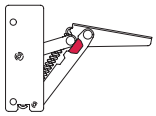

Opening angle 75°

Handing	Item No.
Left	372.49.701
Right	372.49.700

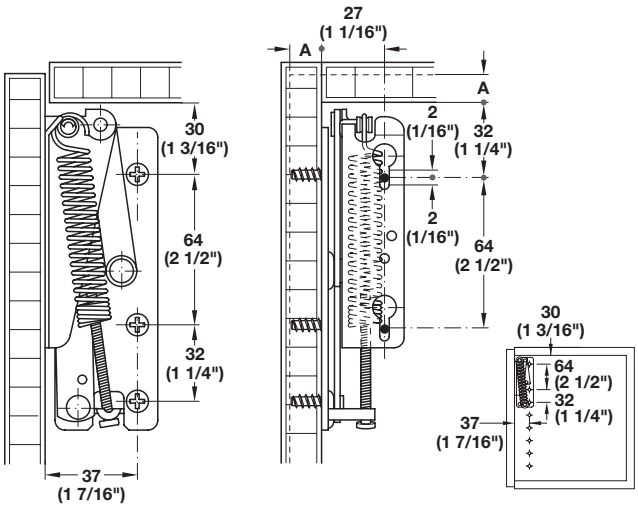

Dimensional data not binding. Dimensions in mm, inches are approximate. We reserve the right to alter specifications without notice.

Häfele Star Stop Flap stay with braking mechanism

> With adjustable braking effect
> Left or right hand mounted

→ Flap without magnet

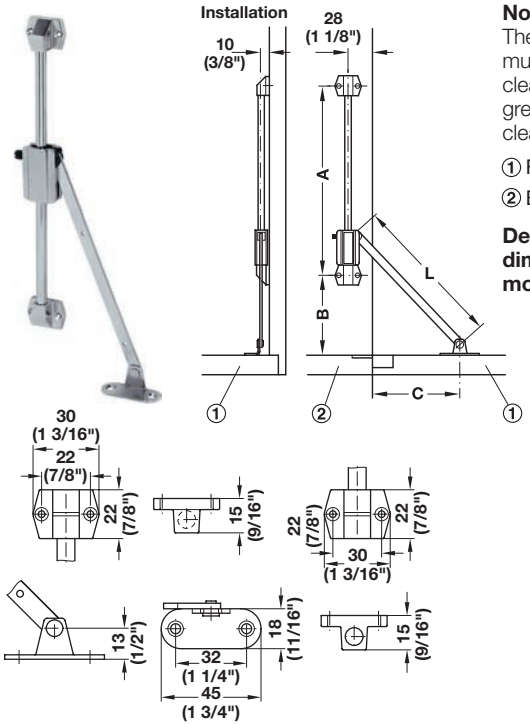

Note
The guide arm must be kept clean of oil, grease and cleaning agents.

① Flap

② Base panel

Determine dim. C by trial mounting.

> With angular bracket with perforated flat arm for clamp
> Screw mounted
> Material: Flat arm and Bracket: Steel; Housing: Zinc Alloy
Finish: nickel-plated

Mounting	Internal cabinet height min.	Dim. L	Dim. A	Dim. B	Item No.
Left	332 (13")	176 (7")	211 (8 1/4")	90 (3 9/16")	365.55.615
	460 (18")	241 (9 1/2")	309 (10 1/4")	120 (4 3/4")	365.55.655
	556 (19 7/8")	292 (11 1/2")	372 (14 1/4")	150 (5 15/16")	365.55.695
Right	332 (13")	176 (7")	211 (8 1/4")	90 (3 9/16")	365.55.605
	460 (18")	241 (9 1/2")	309 (10 1/4")	120 (4 3/4")	365.55.645
	556 (19 7/8")	292 (11 1/2")	372 (14 1/4")	150 (5 15/16")	365.55.685

→ Clamp

> Holds the flap closed
> Material: Plastic; Finish: nickel-plated

Color	Item No.
black	365.67.360

Flap hinges pages 9.93-9.100

Dimensional data not binding. Dimensions in mm, inches are approximate. We reserve the right to alter specifications without notice.

This page is left blank intentionally.

Dimensional data not binding. Dimensions in mm, inches are approximate. We reserve the right to alter specifications without notice.

Flap Stays

→ Flap Stay with Catch

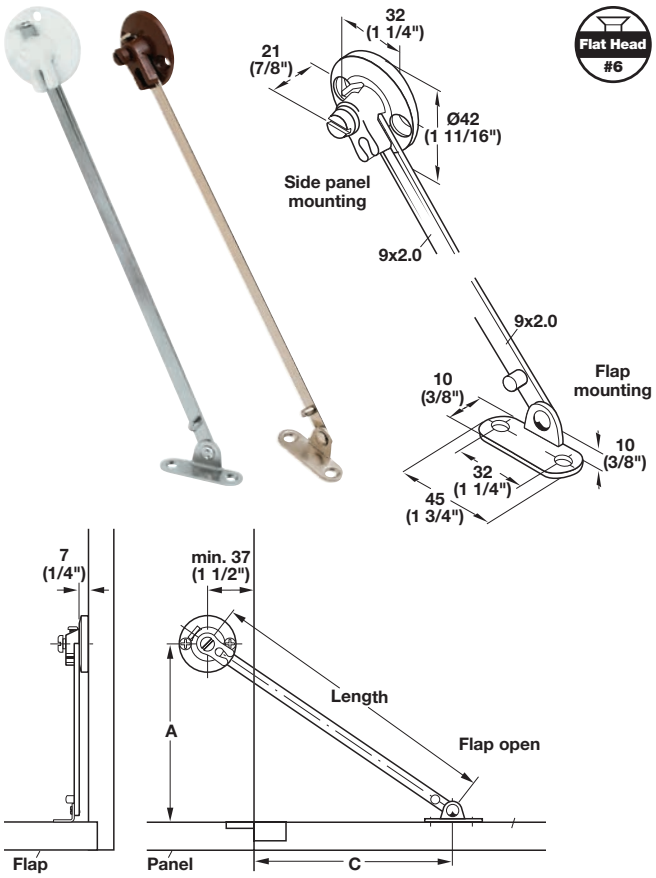

> Screw mounted
> Reversible, can be installed left or right
> To adjust braking action, loosen or tighten screw on stay, as needed
> Material: Steel/Plastic

Length	nickel-plated/white	nickel-plated/brown
225 (8 13/16")	365.75.710	-
275 (10 13/16")	365.75.729	365.75.121

Note
Keep brake piston rod free of oil, grease and other contaminants at all times.

Length	Inside cabinet depth min.	A	C
225 (8 13/16")	190 (7 1/2")	135 (5 5/16")	Determine by trial mounting
275 (10 13/16")	240 (9 7/16")	175 (6 7/8")	

Dimensional data not binding. Dimensions in mm, inches are approximate. We reserve the right to alter specifications without notice.

Flap Stays

> Reversible, can be installed left or right
> With brake
> Material: Steel; Finish: nickel-plated
Square tube: Brass

→ Fall-ex® Flap Stay

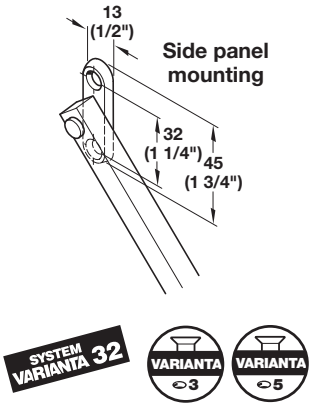

Length	Item No.
250 (9 13/16")	372.17.753
330 (13")	372.17.762
465 (18 5/16")	372.17.771

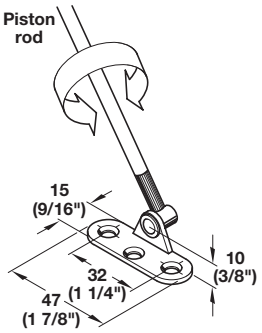

Twist piston rod to adjust braking action. Turn clockwise to reduce braking action; counter-clockwise to increase.

Vertical mounting

Length	Inside cabinet height	A	C
250 (9 13/16")	300–400 (11 13/16"–15 3/4")	214.5	Trial
325 (12 13/16")	350–450 (13 3/4"–17 11/16")	288.0	Trial
450 (17 11/16")	400–500 (15 3/4"–19 11/16")	406.5	Trial

Horizontal mounting

Length	Inside cabinet height	A	C
250 (9 13/16")	300–400 (11 13/16"–15 3/4")	22.5	Trial
325 (12 13/16")	350–450 (13 3/4"–17 11/16")	54.5	Trial
450 (17 11/16")	400–500 (15 3/4"–19 11/16")	118.5	Trial

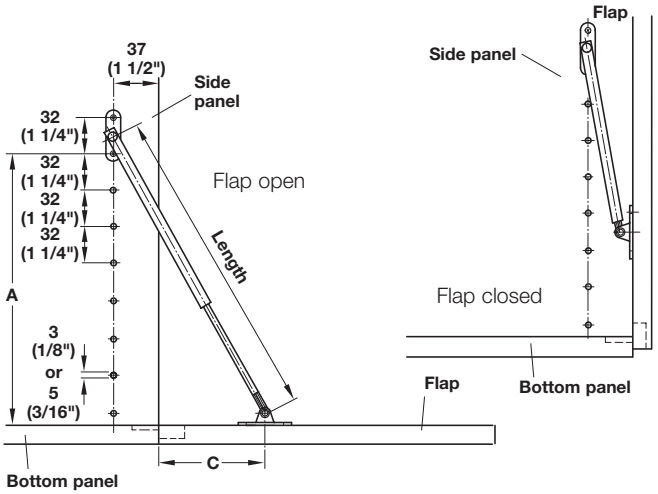

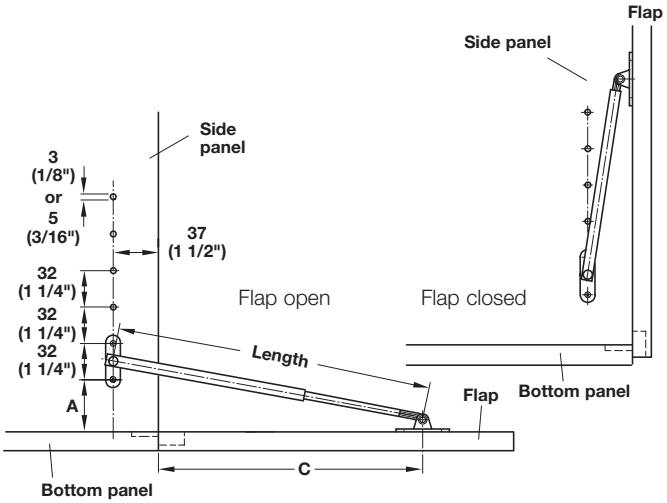

Varianta screws page 12.16

Dimensional data not binding. Dimensions in mm, inches are approximate. We reserve the right to alter specifications without notice.

Flap Stays

> Soft close
> Reversible, can be installed left or right

soft&silent

→ Short Arm Flap Stay

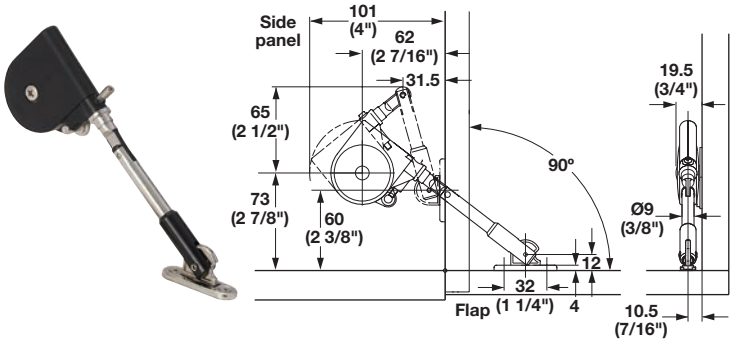

> For small height door applications
> Built-in catch holds the door closed
> No magnetic catch required
> Can be used with piano, butt, or flap hinges
> Material: Steel/Plastic

Finish	Item No.
nickel-plated/black	365.30.330

Supplied With
Mounting screws

→ Flap Stay

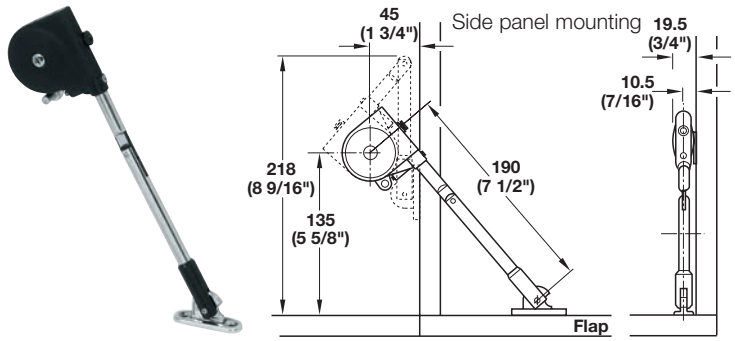

> With speed-mount bracket
> Material: Steel/Plastic

Finish	Item No.
nickel-plated/black	365.30.300

Supplied With
Mounting screws

→ Flap Stay

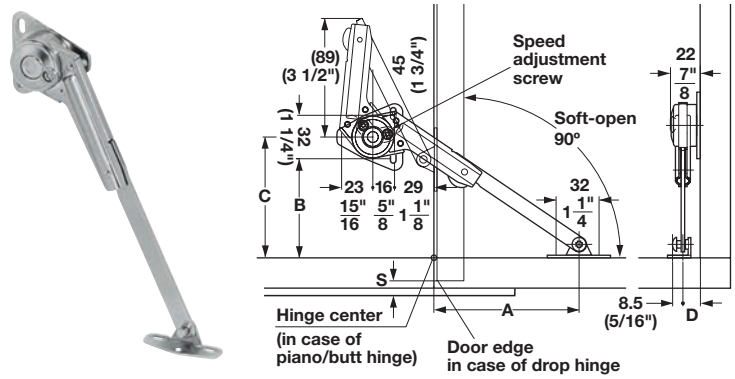

S dimension is the overlay coverage for drop hinge(s).

> Material: Steel; Finish: nickel-plated

Handing	Item No.
Left	365.30.681
Right	365.30.680

Supplied With
Mounting screws

Hinge type	A	B	C	D
Drop hinge (SDH-001)	81+S (3 3/16")	91 (3 9/16")	107 (4 3/16")	11 (7/16")
Piano/Butt hinge	90 (3 1/2")	99 (3 7/8")	115 (4 1/2")	

Dimensional data not binding. Dimensions in mm, inches are approximate. We reserve the right to alter specifications without notice.

Miniwinch

> For wood doors; with adjustable opening angle and braking effect and soft open and soft closing mechanism
> No time-consuming cabinet processing required
> For horizontal or vertical installation (extremely little space required inside the cabinet)
> Suitable for left or right hand use
> Internal cabinet depth: min. 196 mm (7 11/16") (horizontally), min. 110 mm (4 5/16") (vertically)
> Door height: 200–480 mm (7 7/8"–18 7/8")
> Door weight: max. 12 kg (26 lbs.)
> For screw mounting with euro screws
> W x L x D: 89 x 23 x 163 mm (3 1/2" x 15/16" x 6 7/16") when installed horizontally
> Material: Front Fixing Brackets: Zinc Alloy; Finish: nickel-plated; Cover Caps: Plastic; Fitting; Plastic; Color: gray

→ Flap Stay

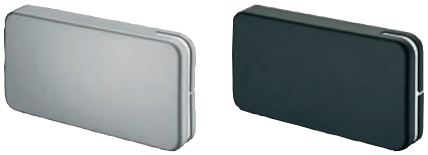

Adjustment

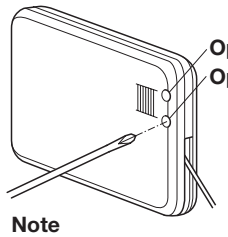

Note
Lower door weight during adjustment.

Planning and installation

Horizontal installation

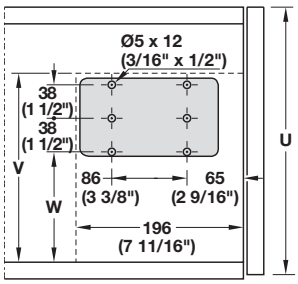

U	V	W	X
200–330 (7 7/8"–13")	194 (7 5/8")	102 (4")	137 (5 3/8") + Z
330–430 (13"–17")	218 (8 9/16")	126 (5")	161 (6 5/16") + Z
430–480 (17"–18 7/8")	228 (9")	136 (5 3/8")	171 (6 11/16") + Z

Model	silver colored matt cover caps	black cover caps
A	365.47.931	365.47.331
B	365.47.932	365.47.332
C	365.47.933	365.47.333
D	365.47.934	365.47.334
E	365.47.935	365.47.335
F	365.47.936	365.47.336

Supplied With
Front fixing bracket
Cover cap
Mounting material

Vertical installation

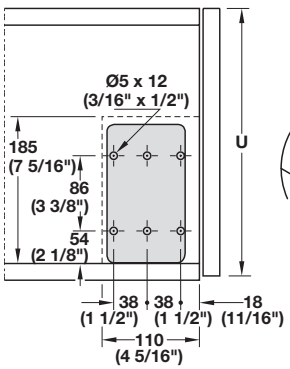

U	X
200–400 (7 7/8"–15 3/4")	161 (6 5/16") + Z

Front fixing

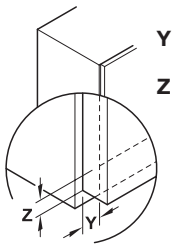

Y = lateral door overlay dimension
Z = bottom door overlay dimension

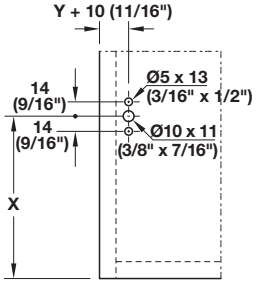

Dimensional data not binding. Dimensions in mm, inches are approximate. We reserve the right to alter specifications without notice.

Miniwinch

Sample measurements table for choosing the correct model

Horizontal installation

Flap height	Flap hinge							Concealed hinge						
	Flap weight lbs.	Model*						Flap weight lbs.	Model*					
		A	B	C	D	E	F		A	B	C	D	E	F
200–230 mm (7 7/8"–9 1/16")	5.3–6.2	1	-	-	-	-	-	4.4–6.2	1	-	-	-	-	-
	8.8–10.6	-	1	-	-	-	-	7.7–10.6	-	1	-	-	-	-
	9.3–13.7	-	-	1	-	-	-	9.5–12.8	-	-	1	-	-	-
	10.6–15	-	-	-	1	-	-	10.8–15.2	-	-	-	1	-	-
	12.8–17.6	-	-	-	-	1	-	13–17.2	-	-	-	-	1	-
	15.9–22.9	-	-	-	-	-	1	16.8–22	-	-	-	-	-	1
230–270 mm (9 1/16"–10 5/8")	4.4–5.1	1	-	-	-	-	-	4.4–5.3	1	-	-	-	-	-
	6.6–9.7	-	1	-	-	-	-	6.6–7.9	2	-	-	-	-	-
	7.1–9.7	2	-	-	-	-	-	7.1–8.8	-	1	-	-	-	-
	7.9–11.5	-	-	1	-	-	-	8.2–12.3	-	-	1	-	-	-
	9.7–13.2	-	-	-	1	-	-	9.7–13.7	-	-	-	1	-	-
	11.5–15.4	-	-	-	-	1	-	13.2–16.8	-	-	-	-	1	-
	13.2–18.5	-	2	-	-	-	-	15–18.7	-	2	-	-	-	-
	15–19	-	-	-	-	-	1	15–20.3	-	-	2	-	-	-
	15–21.2	-	-	1	-	-	-	15.4–19.8	-	-	-	-	-	1
270–330 mm (10 5/8"–13")	3.1–4.4	1	-	-	-	-	-	3.7–4.6	1	-	-	-	-	-
	6.4–8.4	2	1	-	-	-	-	6.8–8.6	-	1	-	-	-	-
	6.6–10.1	-	-	1	-	-	-	7.1–8.4	2	-	-	-	-	-
	7.9–11.5	-	-	-	1	-	-	8.4–11	-	-	1	-	-	-
	10.1–13.2	-	-	-	-	1	-	8.8–11.5	-	-	-	1	-	-
	12.3–17.2	-	2	-	-	-	-	10.4–16.1	-	-	-	-	1	-
	14.1–17.2	-	-	-	-	-	1	11.9–16.3	-	2	-	-	-	-
	14.1–19.4	-	-	2	-	-	-	12.3–16.8	-	-	-	-	-	1
	15.4–22.5	-	-	-	2	-	-	16.3–19.8	-	-	2	-	-	-
	19–26	-	-	-	-	2	-	19–24.3	-	-	-	2	-	-
	-	-	-	-	-	-	-	23.4–27.8	-	-	-	-	2	-
330–381 mm (13"–15")	6–8.2	-	1	-	-	-	-	5.7–7.9	-	1	-	-	-	-
	7.1–9.5	-	-	1	-	-	-	8.2–11.2	-	-	-	1	-	-
	8.2–10.8	-	-	-	1	-	-	8.6–10.8	-	-	1	-	-	-
	9.5–12.6	-	-	-	-	1	-	9.7–12.1	-	-	-	-	1	-
	11–15.4	-	2	-	-	-	-	11–15.9	-	2	-	-	-	-
	12.1–15.7	-	-	-	-	-	1	11.9–14.8	-	-	-	-	-	1
	14.3–18.7	-	-	2	-	-	-	15.9–19.4	-	-	2	-	-	-
	15.2–22.3	-	-	-	2	-	-	17.6–24.7	-	-	-	2	-	-
	19.2–24.5	-	-	-	-	2	-	21.2–27.3	-	-	-	-	2	-
	26.2–29.8	-	-	-	-	-	2	28.2–30.9	-	-	-	-	-	2

Flap height	Flap hinge							Concealed hinge						
	Flap weight lbs.	Model*						Flap weight lbs.	Model*					
		A	B	C	D	E	F		A	B	C	D	E	F
381–432 mm (15"–17")	6.4–7.9	-	1	-	-	-	-	6.2–8.2	-	1	-	-	-	-
	6.8–8.6	-	-	1	-	-	-	6.4–8.6	-	-	1	-	-	-
	8.2–9.9	-	-	-	1	-	-	7.3–9.9	-	-	-	1	-	-
	9.9–13.4	-	-	-	-	1	-	8.6–11.5	-	-	-	-	1	-
	9.9–13.4	-	2	-	-	-	-	9.9–15.4	-	2	-	-	-	-
	11.9–15.2	-	-	-	-	-	1	10.8–13.4	-	-	-	-	-	1
	12.6–16.1	-	-	2	-	-	-	13.4–19.2	-	-	2	-	-	-
	15.2–17.6	-	-	-	2	-	-	16.5–24.3	-	-	-	2	-	-
	18.7– 22.3	-	-	-	-	2	-	18.5–26.9	-	-	-	-	2	-
	24–27.6	-	-	-	-	-	2	26.5–32	-	-	-	-	-	2
432–460 mm (17"–18 1/8")	6–6.8	-	1	-	-	-	-	4.9–6.6	-	1	-	-	-	-
	6–8.6	-	-	1	-	-	-	6.4–8.2	-	-	1	-	-	-
	8.2–10.4	-	-	-	1	-	-	7.3–9.9	-	-	-	1	-	-
	9–10.8	-	-	-	-	1	-	8.2–10.8	-	-	-	-	1	-
	9.5–13.4	-	2	-	-	-	-	9.5–13.9	-	2	-	-	-	-
	11.7–12.6	-	-	-	-	-	1	10.8–12.6	-	-	-	-	-	1
	13–18.3	-	-	2	-	-	-	13–18.3	-	-	2	-	-	-
	15.7–18.7	-	-	-	2	-	-	16.5–23.1	-	-	-	2	-	-
	18.3–20.9	-	-	-	-	2	-	18.7–24.3	-	-	-	-	2	-
	22.3–25.4	-	-	-	-	-	2	23.1–27.6	-	-	-	-	-	2
460–479 mm (18 1/8"–18 7/8")	5.5–6.4	-	1	-	-	-	-	6.2–6.6	-	1	-	-	-	-
	6.2–8.4	-	-	1	-	-	-	6.4–8.2	-	-	1	-	-	-
	7.9–9.7	-	-	-	1	-	-	7.5–9	-	-	-	1	-	-
	8.4–10.6	-	-	-	-	1	-	8.2–9.9	-	-	-	-	1	-
	9–12.6	-	2	-	-	-	-	9–13.4	-	2	-	-	-	-
	11.7–17	-	-	2	-	-	-	10.4–12.1	-	-	-	-	-	1
	11.9–12.3	-	-	-	-	-	1	12.1–16.5	-	-	2	-	-	-
	15–19.6	-	-	-	2	-	-	15.4–20.9	-	-	-	2	-	-
	15.9–21.2	-	-	-	-	2	-	19.8–22	-	-	-	-	2	-
	21.6–25.1	-	-	-	-	-	2	24.3–26.5	-	-	-	-	-	2

* The specified number refers to the number of required Miniwinchs.

Dimensional data not binding. Dimensions in mm, inches are approximate. We reserve the right to alter specifications without notice.

Miniwinch

Sample measurements table for choosing the correct model

Vertical installation

Flap height	Flap hinge								Concealed hinge							
	Flap weight lbs.	Model*							Flap weight lbs.	Model*						
		A	B	C	D	E	F			A	B	C	D	E	F	
200–230 mm (7 7/8"–9 1/16")	5.5–6.4	1	-	-	-	-	-		5.7–6.8	1	-	-	-	-	-	
	9–13	-	1	-	-	-	-		9.7–12.1	-	1	-	-	-	-	
	11.7–16.1	-	-	1	-	-	-		13.9–18.7	-	-	1	-	-	-	
	17.6–24.3	-	-	-	1	-	-		16.5–20.5	-	-	-	1	-	-	
230–270 mm (9 1/16"–10 5/8")	4.9–5.5	1	-	-	-	-	-		4.6–5.5	1	-	-	-	-	-	
	7.3–10.6	-	1	-	-	-	-		7.5–9.9	-	1	-	-	-	-	
	9–10.6	2	-	-	-	-	-		8.8–10.6	2	-	-	-	-	-	
	9.3–13.2	-	-	1	-	-	-		9.9–12.3	-	-	1	-	-	-	
	14.6–19	-	-	-	1	-	-		15–19	-	-	-	1	-	-	
	15–21.2	-	2	-	-	-	-		15–20.3	-	2	-	-	-	-	
	21.2–28.2	-	-	2	-	-	-		20.3–26.5	-	-	2	-	-	-	
270–330 mm (10 5/8"–13")	4.2–5.1	1	-	-	-	-	-		4.4–5.1	1	-	-	-	-	-	
	7.1–9.9	-	1	-	-	-	-		6.6–10.8	-	1	-	-	-	-	
	7.5–9.5	2	-	-	-	-	-		7.7–9.9	2	-	-	-	-	-	
	8.4–11.2	-	-	1	-	-	-		8.2–11.2	-	-	1	-	-	-	
	12.6–16.1	-	-	-	1	-	-		11.9–15.7	-	-	-	1	-	-	
	13.4–17.6	-	-	-	-	1	-		13.4–16.1	-	-	-	-	1	-	
	13.9–17.9	-	2	-	-	-	-		13.4–17	-	2	-	-	-	-	
	17.4–24.5	-	-	2	-	-	-		17–22.3	-	-	2	-	-	-	
	24.9–32	-	-	-	2	-	-		23.1–30.2	-	-	-	2	-	-	
	28.4–34.2	-	-	-	-	2	-		26.7–32	-	-	-	-	2	-	
330–381 mm (13"–15")	5.7–7.5	-	1	-	-	-	-		5.5–7.9	-	1	-	-	-	-	
	7.3–9.9	-	-	1	-	-	-		7.1–9.5	-	-	1	-	-	-	
	10.8–13.9	-	-	-	1	-	-		10.1–13.4	-	-	-	1	-	-	
	11–14.3	-	2	-	-	-	-		10.8–14.1	-	-	-	-	1	-	
	11.7–14.3	-	-	-	-	1	-		11.2–15.2	-	2	-	-	-	-	
	14.8–16.1	-	-	-	-	-	1		13.9–16.1	-	-	-	-	-	1	
	16.1–18.7	-	-	2	-	-	-		14.6–20.5	-	-	2	-	-	-	
	21.4–25.8	-	-	-	2	-	-		20.1–24.9	-	-	-	2	-	-	
	23.6–28.4	-	-	-	-	2	-		23.1–28.4	-	-	-	-	2	-	
	29.3–32.8	-	-	-	-	-	2		27.6–32	-	-	-	-	-	2	

Flap height	Flap hinge								Concealed hinge							
	Flap weight lbs.	Model*							Flap weight lbs.	Model*						
		A	B	C	D	E	F			A	B	C	D	E	F	
381–432 mm (15"–17")	5.5–7.5	-	1	-	-	-	-		5.1–7.5	-	1	-	-	-	-	
	7.1–9.3	-	-	1	-	-	-		6.6–8.8	-	-	1	-	-	-	
	9.7–11.9	-	-	-	1	-	-		9.7–11.9	-	-	-	1	-	-	
	10.6–12.3	-	-	-	-	1	-		9.7–14.6	-	2	-	-	-	-	
	11–13.7	-	2	-	-	-	-		10.1–12.3	-	-	-	-	1	-	
	13–14.6	-	-	-	-	-	1		12.1–14.1	-	-	-	-	-	1	
	13.7–18.1	-	-	2	-	-	-		14.6–18.1	-	-	2	-	-	-	
	19–23.4	-	-	-	2	-	-		18.5–22.5	-	-	-	2	-	-	
	21.6–25.1	-	-	-	-	2	-		20.7–25.1	-	-	-	-	2	-	
	26–28.7	-	-	-	-	-	2		24.3–28.7	-	-	-	-	-	2	
432–460 mm (17"–18 1/8")	5.1–6.6	-	1	-	-	-	-		5.1–6.6	-	1	-	-	-	-	
	6.6–8.4	-	-	1	-	-	-		6.2–7.9	-	-	1	-	-	-	
	8.8–11.5	-	-	-	1	-	-		9.3–11.5	-	-	-	1	-	-	
	10.1–11.9	-	-	-	-	1	-		9.3–13.7	-	2	-	-	-	-	
	10.1–13.7	-	2	-	-	-	-		9.7–11.9	-	-	-	-	1	-	
	12.3–13.2	-	-	-	-	-	1		11.5–13.2	-	-	-	-	-	1	
	13.7–17.2	-	-	2	-	-	-		11.9–16.8	-	-	2	-	-	-	
	17.2–22.5	-	-	-	2	-	-		16.3–20.7	-	-	-	2	-	-	
	19.8–22.9	-	-	-	-	2	-		18.5–23.4	-	-	-	-	2	-	
	25.1–26.9	-	-	-	-	-	2		23.4–26.9	-	-	-	-	-	2	
460–479 mm (18 1/8"–18 7/8")	5.3–7.1	-	1	-	-	-	-		5.1–6.6	-	1	-	-	-	-	
	6.2–8.8	-	-	1	-	-	-		6.2–7.9	-	-	1	-	-	-	
	8.4–11	-	-	-	1	-	-		8.8–11.5	-	-	-	1	-	-	
	9.9–11.9	-	-	-	-	1	-		9.3–13.7	-	2	-	-	-	-	
	10.1–13.2	-	2	-	-	-	-		9.7–11.9	-	-	-	-	1	-	
	11.9–13.2	-	-	-	-	-	1		9.3–13.2	-	-	-	-	-	1	
	12.3–17.2	-	-	2	-	-	-		11.9–16.8	-	-	2	-	-	-	
	16.8–22	-	-	-	2	-	-		15.9–20.7	-	-	-	2	-	-	
	19.4–22.9	-	-	-	-	2	-		18.5–23.4	-	-	-	-	2	-	
	23.8–25.6	-	-	-	-	-	-		22.9–25.6	-	-	-	-	-	2	

* The specified number refers to the number of required Miniwinchs.

Dimensional data not binding. Dimensions in mm, inches are approximate. We reserve the right to alter specifications without notice.

Microwinch

- > For wood doors; with adjustable opening angle and soft open and soft closing mechanism
- > No time-consuming cabinet processing required
- > For horizontal or vertical installation (extremely little space required inside the cabinet)
- > Suitable for left or right hand use
- > Internal cabinet depth: min. 180 mm (7") (horizontally), min. 82 mm (3 1/4") (vertically)
- > Door height: 210–480 mm (8 1/4"–18 7/8")
- > Door weight: max. 9 kg (19.8 lbs.)
- > For screw mounting with euro screws
- > W x L x D: 26 x 68 x 160 mm (1 1/16" x 11/16" x 6 5/16") when installed horizontally
- > Material: Housing: Plastic; Front Fixing Brackets: Zinc Alloy
  Finish: nickel-plated

→ Flap Stay

Model	gray	black
A	365.48.510	365.48.310
B	365.48.511	365.48.311
C	365.48.512	365.48.312
D	365.48.513	365.48.313

Adjustment

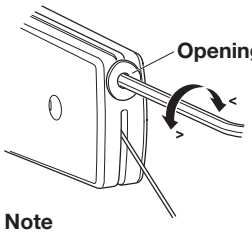

Note
Ease door weight during adjustment.

Supplied With
Front fixing bracket
Mounting material

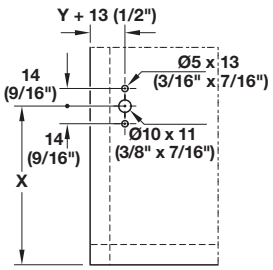

Front fixing

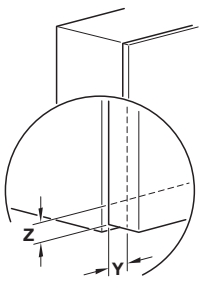

U = door height
V = internal cabinet height
W = drill hole height
X = center of front fixing
Y = lateral door overlay dimension
Z = bottom door overlay dimension

Planning and installation

Horizontal installation

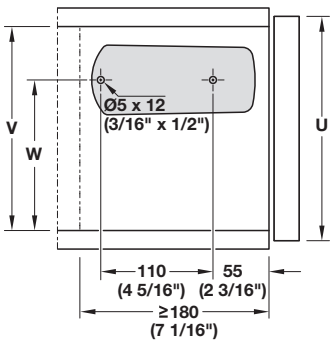

Vertical installation

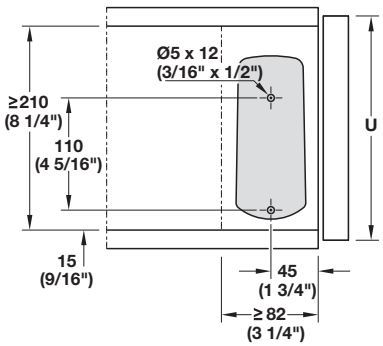

U	V	W	X
210–270 (8 1/4"–10 5/8")	≥173 (6 13/16")	135 (5 5/16")	123 (4 13/16") + Z
270–480 (10 5/8"–18 7/8")	≥186 (7 5/16")	148 (5 13/16")	144 (5 11/16") + Z

U	X
230–480 (9 1/16"–18 7/8")	123 (4 13/16") + Z

Sample measurements table for choosing the correct model.

Dimensional data not binding. Dimensions in mm, inches are approximate. We reserve the right to alter specifications without notice.

Microwinch

Sample measurements table for choosing the correct model.

Horizontal installation

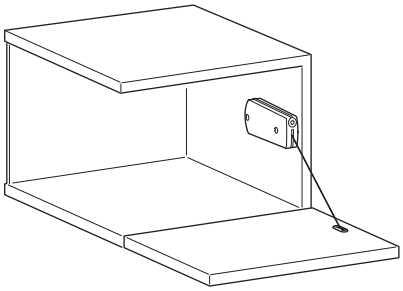

Vertical installation

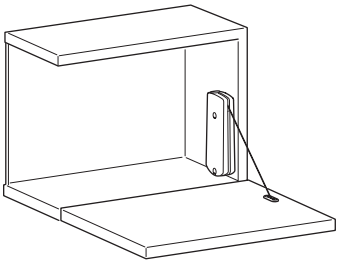

Flap height	Flap hinge					Concealed hinge				
	Flap weight lbs.	Model*				Flap weight lbs.	Model*			
		A	B	C	D		A	B	C	D
210–270 mm (8 1/4"–10 5/8")	3.7–6.6	1	-	-	-	8.6–9.9	2	-	-	-
	6.8–8.8	-	1	-	-	16.5–17.6	-	2	-	-
	10.1–11.7	-	-	1	-	17.6–18.7	-	-	2	-
	11.2–13.2	-	-	-	1	–	-	-	-	-
270–330 mm (10 5/8"–13")	3.7–6.6	1	-	-	-	7.3–9.9	2	-	-	-
	6.8–8.8	-	1	-	-	13.4–16.3	-	2	-	-
	8.8–11.2	-	-	1	-	16.5–18.1	-	-	2	-
	9.7–13.2	-	-	-	1	16.5–18.7	-	-	-	2
330–381 mm (13"–15")	3.7–4.2	1	-	-	-	7.1–7.7	2	-	-	-
	6.4–7.7	-	1	-	-	11.2–15	-	2	-	-
	7.9–9.5	-	-	1	-	15–16.5	-	-	2	-
	8.8–12.1	-	-	-	1	16.5–17.6	-	-	-	2
381–432 mm (15"–17")	3.3–4	1	-	-	-	6–7.3	2	-	-	-
	5.5–7.3	-	1	-	-	10.6–14.6	-	2	-	-
	7.3–8.4	-	-	1	-	15–15.9	-	-	2	-
	7.9–10.4	-	-	-	1	16.1–17.6	-	-	-	2
432–460 mm (17"–18 1/8")	2.6–3.7	1	-	-	-	5.5–6.8	2	-	-	-
	5.1–7.3	-	1	-	-	10.1–13.2	-	2	-	-
	7.1–7.7	-	-	1	-	13.4–15.4	-	-	2	-
	7.7–9.9	-	-	-	1	15.7–17.6	-	-	-	2
460–479 mm (18 1/8"–18 7/8")	–	-	-	-	-	–	-	-	-	-
	4.9–6.2	-	1	-	-	9.7–11.7	-	2	-	-
	6.2–7.1	-	-	1	-	12.1–14.3	-	-	2	-
	7.3–9.5	-	-	-	1	14.6–16.5	-	-	-	2

Flap height	Flap hinge					Concealed hinge				
	Flap weight lbs.	Model*				Flap weight lbs.	Model*			
		A	B	C	D		A	B	C	D
210–270 mm (8 1/4"–10 5/8")	5.5–8.4	1	-	-	-	9.5–12.3	2	-	-	-
	8.6–10.8	-	1	-	-	–	-	2	-	-
	12.6–14.3	-	-	1	-	–	-	-	-	-
	–	-	-	-	-	–	-	-	-	-
270–330 mm (10 5/8"–13")	5.1–6.8	1	-	-	-	9.3–11	2	-	-	-
	7.1–9	-	1	-	-	15.4–16.5	-	2	-	-
	9.3–12.1	-	-	1	-	16.8–19.8	-	-	2	-
	12.1–13	-	-	-	1	–	-	-	-	-
330–381 mm (13"–15")	4–5.7	1	-	-	-	7.5–8.6	2	-	-	-
	6.6–8.4	-	1	-	-	12.3–14.3	-	2	-	-
	8.4–10.4	-	-	1	-	16.5–18.3	-	-	2	-
	9.7–12.1	-	-	-	1	18.3–19.8	-	-	-	2
381–432 mm (15"–17")	3.7–5.1	1	-	-	-	6.4–9.3	2	-	-	-
	6.2–7.7	-	1	-	-	10.4–13.7	-	2	-	-
	7.7–9.5	-	-	1	-	15.9–17	-	-	2	-
	9.5–10.1	-	-	-	1	16.1–18.7	-	-	-	2
432–460 mm (17"–18 1/8")	3.3–4.4	1	-	-	-	6.8–8.8	2	-	-	-
	5.5–7.1	-	1	-	-	9.7–13.4	-	2	-	-
	7.3–8.8	-	-	1	-	13.7–16.5	-	-	2	-
	7.9–9.5	-	-	-	1	15–18.3	-	-	-	2
460–479 mm (18 1/8"–18 7/8")	–	-	-	-	-	6.2-8.4	2	-	-	-
	5.1–5.7	-	1	-	-	9–12.8	-	2	-	-
	7.1–7.9	-	-	1	-	13.2–15.9	-	-	2	-
	7.3–8.8	-	-	-	1	13.9–16.5	-	-	-	2

* The specified number refers to the number of required Microwinchs.

Dimensional data not binding. Dimensions in mm, inches are approximate. We reserve the right to alter specifications without notice.

Salice Pacta

> With automatic closing spring or Push version
> Integrated soft opening mechanism in opening direction
> Without additional hinge connection
> Flap and base panel are on one level in open position
> Clips onto cabinet
> Drilling depth: 13 mm (1/2")
> Adjustment facility: Side adjustment from -1.5 – +1.5 mm (-1/16" – +1/16")
Height adjustment from -1.5 – +1.5 mm (-1/16" – +1/16")
Depth adjustment from -0.5 – +2.8 mm (-1/64" – +1/8")
> Overlay: 17 mm (11/16") (fixed)
> Door height: 280–400 mm (11 1/32"–15 3/4")
> Door width: <900 mm (35 7/16")
> Material: Zinc Alloy; Finish: nickel-plated

Note Cover caps, see page **9.164**

→ Flap Stay

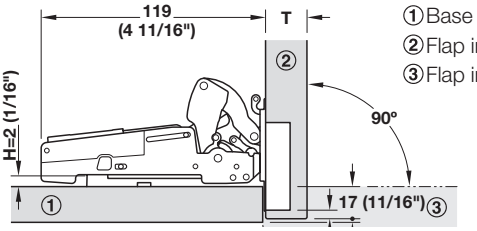

①Base panel
②Flap in closed position
③Flap in open position

Model	With automatic closing spring	Push, without automatic closing spring
W	365.13.700	365.13.710
I	365.13.701	365.13.711
S	365.13.702	365.13.712

Supplied With 2 Hinges, 2 Mounting plates, 2 Soft opening mechanisms, Screws

Note Order Push magnetic catch separately

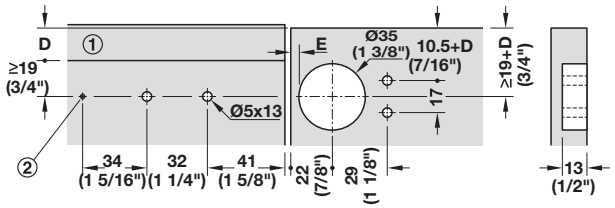

①Side panel ②Safety lock screw **D** = overlay

Weight capacity table

Door height	Door weight in lbs.		
	Model W	Model I	Model S
280 (11 1/32")	6.2-9.5	9.5-14.5	14.7-21
300 (11 13/16")	5.7-9	9-13.6	13.6-9.7
320 (12 5/8")	5.5-8.6	8.4-12.8	12.8-18.3
340 (13 3/8")	5.1-8.2	8.2-11.9	11.9-17.4
360 (14 3/16")	4.8-7.7	7.9-11	11-16.3
380 (14 15/16")	4.6-7.3	7.7-10.3	10.3-15.4
400 (15 3/4")	4.4-5.3	7.3-9.9	9.9-14.5

Door thickness	16 (5/8")	17 (11/16")	18 (23/32")	19 (3/4")	20 (25/32")	21 (27/32")	22 (7/8")	23 (29/32")	24 (15/16")	25 (1")	26 (1 1/32")	27 (1 1/16")	28 (1 3/32")
Distance to cup E (fixed) 4.5 mm (11/64")	1.3 (3/64")	2.1 (15/64")	3.0 (1/8")	3.9 (5/32")	4.8 (3/16")	5.7 (7/32")	6.6 (17/64")	7.5 (19/64")	8.5 (21/64")	9.4 (3/8")	10.4 (13/32")	11.3 (7/16")	12.3 (31/64")
Minimum gap F													

→ Center Hinge

Finish	Item No.
gray	372.76.600
white	372.76.601
black	372.76.602

Dimensional data not binding. Dimensions in mm, inches are approximate. We reserve the right to alter specifications without notice.

Salice Pacta

→ Cover Caps

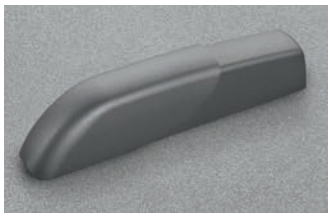

> Material: Plastic

Color	Item No.
gray	365.13.520
white	365.13.720
black	365.13.320

Supplied With
2 pcs.

Installation

1.

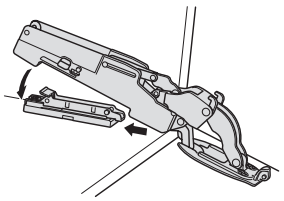

2.

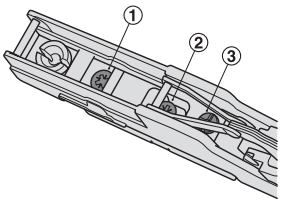

Adjustment facility
① Depth adjustment
② Side adjustment
③ Height adjustment

3.

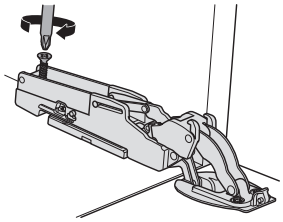

Fixing the safety lock screw.

4.

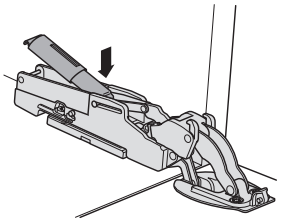

Inserting the soft opening mechanism.
Slide front of soft opening mechanism onto the designated axle and clip-in.
Tools are not required.

5.

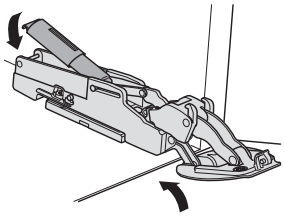

Clip soft opening mechanism into rear axle.

6.

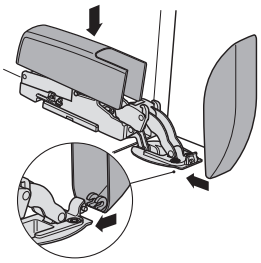

Clip cover housing onto hinge arm and then onto cup.

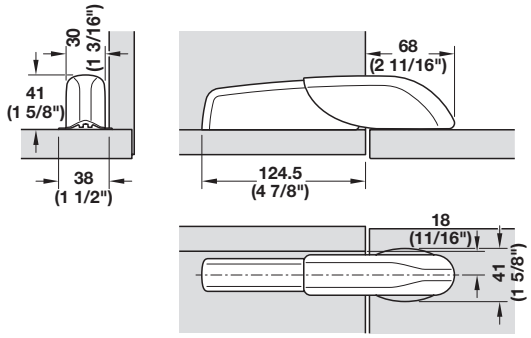

Disassembly

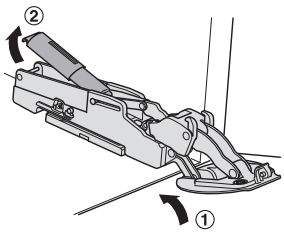

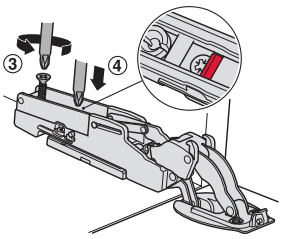

① Lift flap
② Remove soft opening mechanism.
③ Loosen safety lock screw.
④ Remove hinge arm from mounting plate by applying pressure onto clip of mounting plate from above.

Dimensional data not binding. Dimensions in mm, inches are approximate. We reserve the right to alter specifications without notice.

Door Restraints

→ Decorative Door Chain

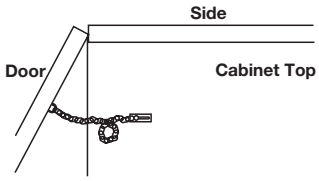

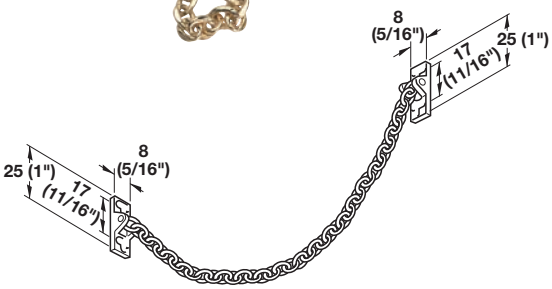

> Used as door restraint
> Length: 200 mm (7 7/8")
> Material: Brass, polished

	Item No.
	372.35.813

→ Door Restraint

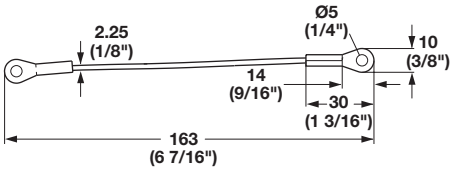

> Material: Steel wire: braided with Plastic (PVC) coating

Finish	Item No.
zinc-plated	366.74.900

Supplied With
Screws
Washers

Dimensional data not binding. Dimensions in mm, inches are approximate. We reserve the right to alter specifications without notice.

Häfele Maxi Chest Stay

> Maximum opening angle 75°
> Clip mounting without tools on pre-mounted bracket
> Trial mounting is recommended
> Adjustable with a 10 mm (3/8") hex key, (not included, see below)
> Left or right mounted
> Concealed hinges and mounting plates are required for installation (not included)
> Lids over 600 mm (23 5/8") wide should use 2 fittings

→ Cabinet Mounting Bracket

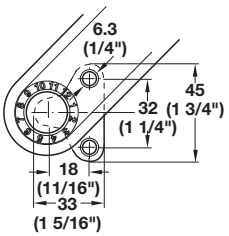

VARIANTA ⌀5

> For wood or aluminum doors over 35 mm (1 3/8") wide
> Material: Steel; Finish: nickel-plated

Distance from edge	Item No.
28 (1 1/8")	373.69.907
37 (1 7/16")	373.69.906

→ Cabinet Mounting Bracket

soft&silent

VARIANTA ⌀5

> With soft-close
> Material: Zinc; Finish: nickel-plated

Distance from edge	Item No.
28/37 (1 1/8"/1 7/16")	373.69.799

→ Chest Stay

Opening angle:

75°

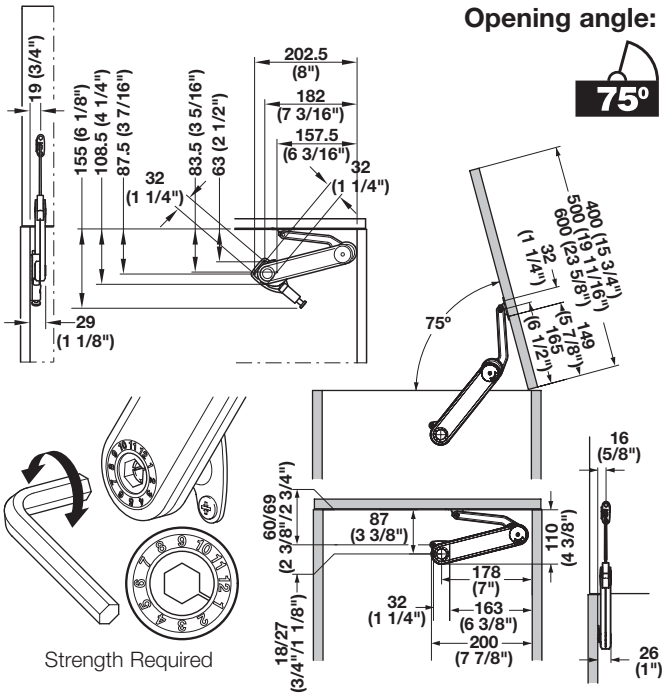

Strength Required

> Unhanded
> Cabinet mounting bracket sold separately
> Material: Zinc Alloy; Finish: nickel-plated

Version (see chart below)	Item No.
F	373.85.700
G	373.85.701
H	373.85.702

	F blue	G brown	H black
400 (15 3/4")	3.5–6.8 lbs.	6.6–11.6 lbs.	11.4–20.6 lbs.
500 (19 11/16")	2.8–5.7 lbs.	5.5–9.2 lbs.	9.4–16.5 lbs.
600 (23 5/8")	2.4–2.5 lbs.	5.0–9.2 lbs.	8.8–14.7 lbs.

Note
Weight chart is based on one lid stay. Weight shown can be doubled if using 2 stays.

Flat head screws	pages 12.7-12.8, 12.10, 12.13
Varianta screws	page 12.16

Dimensional data not binding. Dimensions in mm, inches are approximate. We reserve the right to alter specifications without notice.

Häfele Maxi Chest Stay

→ Door Mounting Bracket

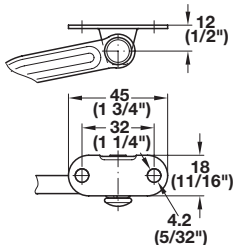

> For wood or aluminum doors over 35 mm (1 3/8") wide
> Material: Steel

Finish	Item No.
nickel-plated	373.66.681

→ Door Mounting Bracket

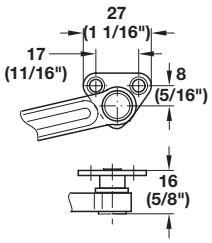

> For use with aluminum doors
> Material: Steel

Finish	Item No.
nickel-plated	373.66.682

→ Hex Key

> 10 mm (3/8")
> Material: Plastic

Color	Item No.
gray	235.79.301

Flat head screws	pages 12.7-12.8, 12.10, 12.13
Varianta screws	page 12.16

Dimensional data not binding. Dimensions in mm, inches are approximate. We reserve the right to alter specifications without notice.

Bench Seat Hinge

- > Hinge design ensures safe retention of seat top in raised position at an angle of 95°
- > Approximately 110 mm (4 5/16") of forward movement is guaranteed
- > Unrestricted opening even of fully upholstered seats, as a joint is not required between the seat and back
- > Hinge joints incorporate a stop to prevent the open seat from slamming against the fitting
- > Springs for seat tops weighing 8 or 12 kg (17.6 or 26.4 lbs.) counterbalance the weight of the seat top and assist opening
- > With spring
- > Material: Steel

Panel weight	Item No.
Up to 8 kg (17.6 lbs.)	643.01.541
Up to 12 kg (26.4 lbs.)	643.01.525

Note
1 pair = 1 L/H and 1 R/H

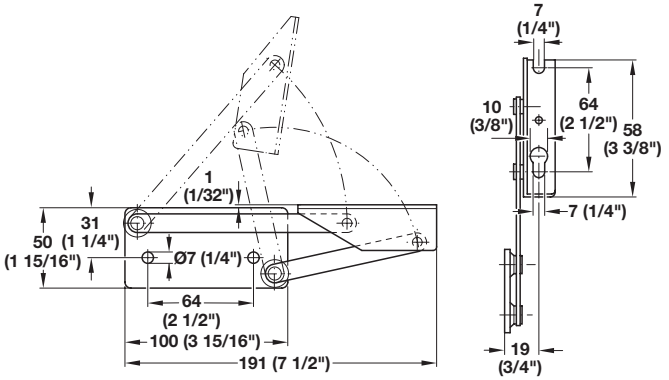

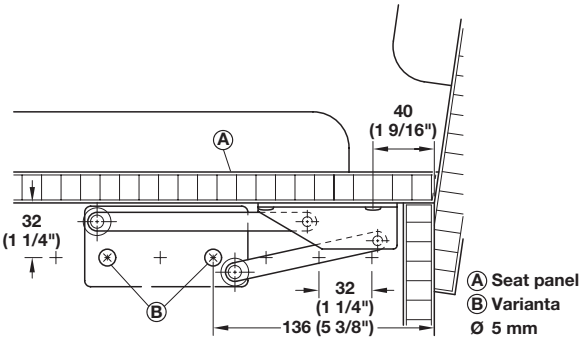

Stays

→ Draw Pull Catches

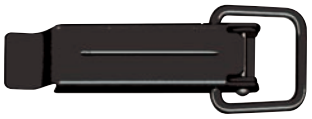

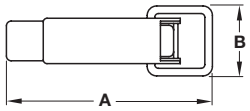

- > Material: Steel; Color: black

A	B	Wire clamp Ø	Item No.
55 (2 3/16")	22 (7/8")	3 (1/8")	380.53.306
75 (3")	30 (1 3/16")	4 (5/32")	380.53.315

Note
Order strikes separately.

→ Strikes for Draw Pull Catches

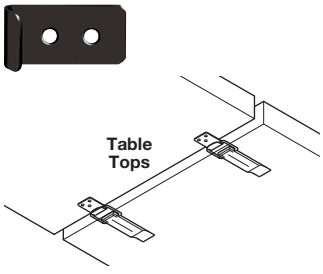

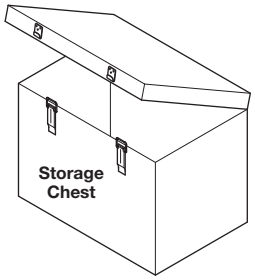

- > Material: Steel; Color: black

Length	Width	Thickness	Item No.
28 (1 1/8")	13 (1/2")	1.3 (1/32")	380.65.306
24 (1")	18 (11/16")	2.0 (1/16")	380.65.315

Dimensional data not binding. Dimensions in mm, inches are approximate. We reserve the right to alter specifications without notice.

Lid Stays

→ Accuride 1155 Easy Down

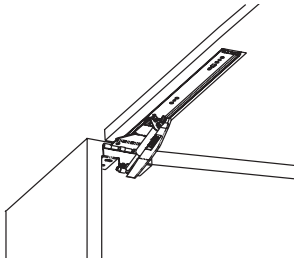

Cylinder Cover

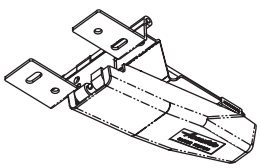

Cover shown attached to cylinder.

- > The Easy Down requires few or no cabinet modifications, and is easy to install
- > Door closing speed remains similar on light and heavy doors
- > Increases safety in the home or workplace by slowing the speed and dampening overhead doors as they close
- > Internal mounting allows cabinets to be positioned side to side
- > Only one pair needed for doors up to 48" wide; no adjustments necessary to the closure mechanisms
- > For wood applications
- > Doors open over the top of cabinet
- > Weight capacity: up to 14 kg (30 lbs.)/pair, doors up to 48" wide
- > Material: Steel; Finish: black

Slide length	Slide travel	Item No.
303.3 (11.94")	194.1 (7.64")	408.22.331
354.1 (13.94")	244.9 (9.64")	408.22.336
404.9 (15.94")	295.7 (11.64")	408.22.341
455.7 (17.94")	346.4 (13.64")	408.22.346
506.5 (19.94")	397.3 (15.64")	408.22.351
557.3 (21.94")	448.1 (17.64")	408.22.356
608.1 (23.94")	498.9 (19.64")	408.22.361

Supplied With
2 Slides
2 Cylinder covers
4 Clip-on brackets
Mounting screws

Note
Mounting brackets are included and recommended when particle board is used.

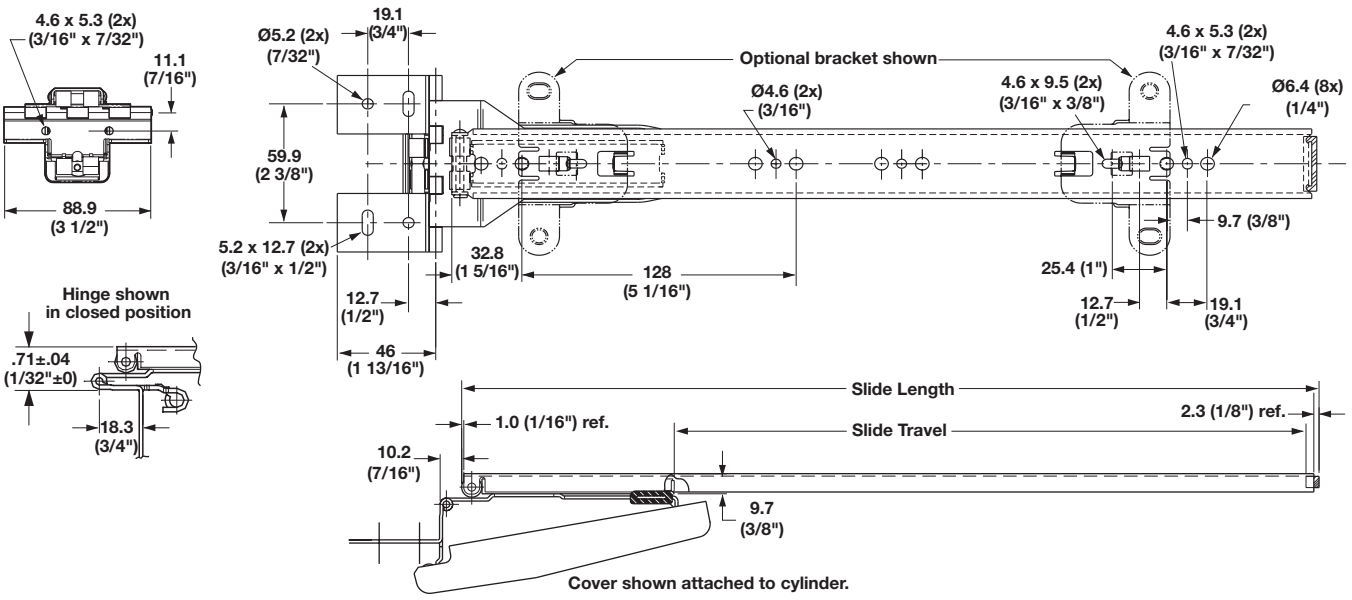

Dimensional data not binding. Dimensions in mm, inches are approximate. We reserve the right to alter specifications without notice.

Non-Bore Hinge

> For lightweight glass doors
> With press-fit bushing
> Material: Steel; Bushing: Plastic

Note
Dimensions shown on mounting diagrams are only approximate.
Please conduct trial mounting to determine your exact dimensions.

→ Simplex-Inset

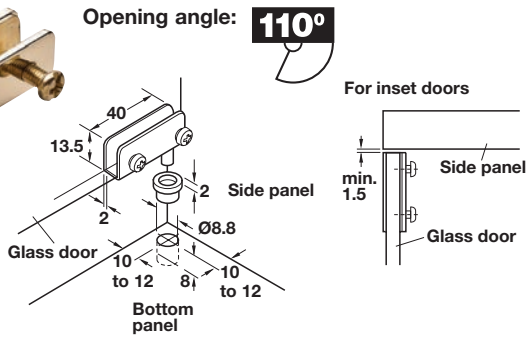

> Glass thickness: max. 5 mm (3/16")

Finish	Item No.
chrome-plated	361.42.202
black	361.42.300

Supplied With
Left hinge
Right hinge
Self-adhesive pressure plates and screws

→ Simplex-Inset

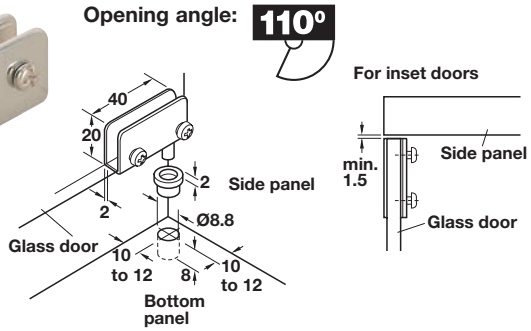

> Glass thickness: max. 6 mm (1/4")

Finish	Item No.
chrome-plated	361.42.211
black	361.42.319

Supplied With
Left hinge
Right hinge
Self-adhesive pressure plates and screws

Dimensional data not binding. Dimensions in mm, inches are approximate. We reserve the right to alter specifications without notice.

Badge Hinge

> For lightweight glass doors
> Non-bore hinge and lock

→ Top and Bottom Door Hinge

Opening angle:

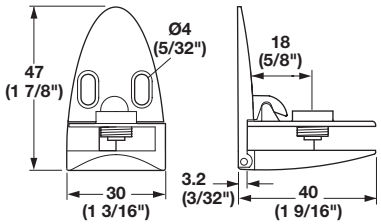

> With catch
> Screw mounted
> Stylish design for inset doors
> Edge mounts to glass door with one ABS plastic screw
> Horizontal adjustment with slotted holes
> For glass thickness: 4–6 mm (5/32"–1/4")
> Door size (W x H): max. 400 x 1000 mm (15 3/4" x 39 3/8")
> Material: Zinc die-cast; Catch: ABS Plastic

Finish	Item No.
aluminum	361.81.900

Supplied With
Top hinge
Bottom hinge
ABS screw

→ Center Door Hinge

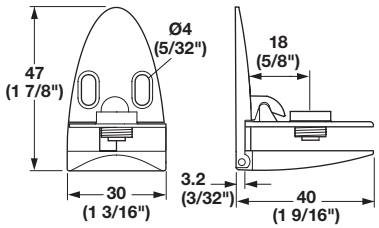

> Unhanded
> Material: Zinc die-cast

Finish	Item No.
aluminum	361.81.912

→ Single Door Handle

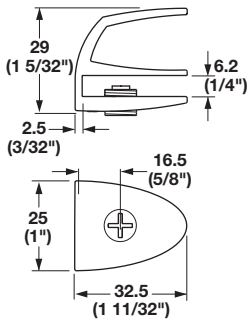

> Screw mounted
> Can be used on door with bottom mounted or top mounted lock
> Edge mounts to glass door with ABS screw
> For glass thickness: 4–5 mm (5/32"–3/16")
> Material: Zinc die-cast

Finish	Item No.
aluminum	154.28.900

Supplied With
ABS screw

Dimensional data not binding. Dimensions in mm, inches are approximate. We reserve the right to alter specifications without notice.

Non-Bore Locks

> Material: Zinc die-cast; Finish: aluminum

→ Single Door Lock

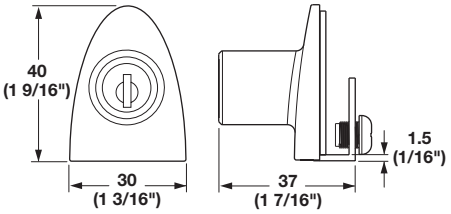

> Screw mounted
> Available in keyed-alike option
> Edge mounts to glass door with two ABS plastic screws
> Closure travel: 180°
> For glass thickness: 4–5 mm (5/32"–3/16")
> Keyed alike #D20

Finish	Item No.
aluminum	233.54.901

Supplied With
2 Keys
2 ABS plastic screws
Strike plate

→ Edge Strike Plate

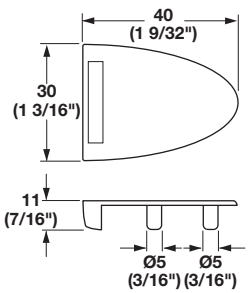

> Single door
> Press-fit
> Glass door must be flush with edge of cabinet
> Edge mounts to cabinet
> Boring required for press-fit pins: Ø5 x 9 mm (Ø3/16" x 3/8")

	Item No.
	233.54.990

Dimensional data not binding. Dimensions in mm, inches are approximate. We reserve the right to alter specifications without notice.

Lightweight

> Material: Zinc die-cast

→ All Metal Hinge

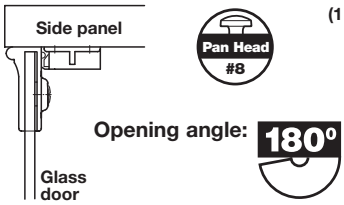

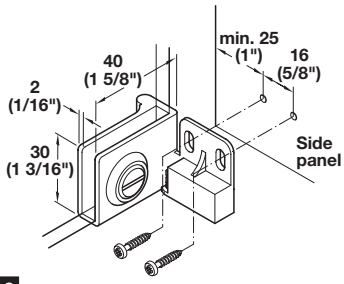

> With catch
> Economy version of a non-bore glass door hinge
> Screw mounted to side of cabinet
> Vertical adjustment with oblong holes
> For glass thickness: up to 6 mm (1/4")
> Door weight: max. 4 kg (8.8 lbs.)
> Door W x H: max. 350 x 800 mm (13 3/4" x 31 1/2")
> Minimum 2.5 mm (1/8") gap between glass and panels

Finish	Item No.
textured chrome-plated polished	361.93.240

Supplied With
Left hinge
Right hinge

→ Glass Door Hinge

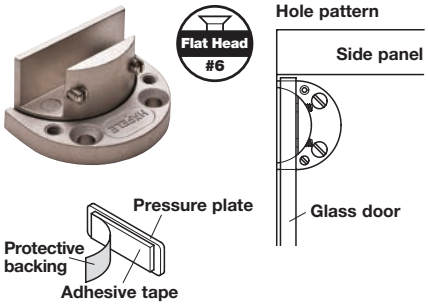

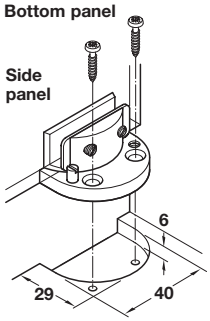

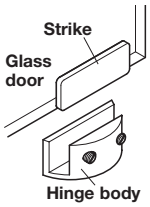

Opening angle: 95°

Installation
Remove protective backing from adhesive tape.
Position pressure plate on glass door.
Attach hinge body to base.
Adjust glass door.
Tighten mounting screws.

> Screw mounted, for inset doors
> Reversible: can be used left or right
> For glass thickness: 6 mm (1/4")
> Door weight: max. 4 kg (8.8 lbs.)
> Door W x H: max. 350 x 800 mm (13 3/4" x 31 1/2")

Finish	Item No.
nickel-plated matt	361.49.603

Flat head screws	pages 12.7-12.8, 12.10, 12.13
Pan head screws	pages 12.9-12.10

Dimensional data not binding. Dimensions in mm, inches are approximate. We reserve the right to alter specifications without notice.

Lightweight

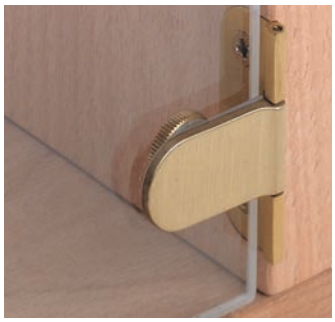

→ Hinge

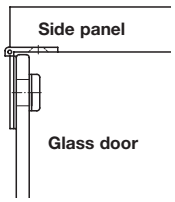

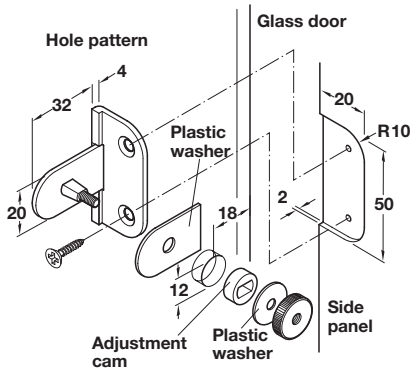

Opening angle: 180°

> For inset doors
> Screw mounted
> Exposed-knuckle hinges with 3 mm (1/8") horizontal adjustment
> Installation requires drilling a Ø12 mm (1/2") hole in glass
> Thumbscrew secures glass
> Reversible: can be used left or right
> For glass thickness: 6 mm (1/4")
> Door weight: max. 4 kg (8.8 lbs.)
> Door W x H: max. 350 x 800 mm (13 3/4" x 31 1/2")
> Material: Brass

Finish	Item No.
nickel-plated matt	361.85.609

Flat head screws	pages 12.7-12.8, 12.10, 12.13
Pan head screws	pages 12.9-12.10

Dimensional data not binding. Dimensions in mm, inches are approximate. We reserve the right to alter specifications without notice.

Hinges

> For inset doors
> Screw mounted

→ Lightweight

Steel/
chrome-plated

Flat Head #6

> Requires Ø7 mm (9/32") drill hole in glass
> Opening angle 180°
> Door weight: max. 4 kg (8.8 lbs.)/pair
> Door W x H: max. 450 x 700 mm (17 11/16" x 27 9/16")

Material/Finish	Item No.
Steel/chrome-plated	361.46.200
304 Stainless Steel	361.46.010

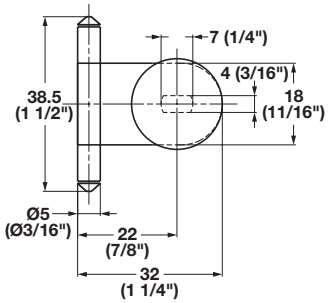

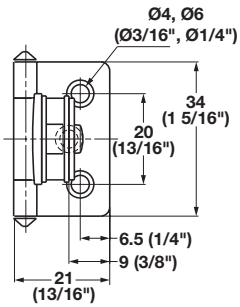

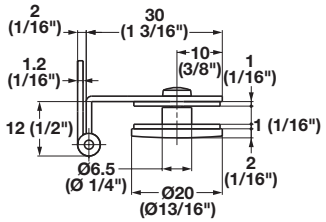

Cut Out Dimension

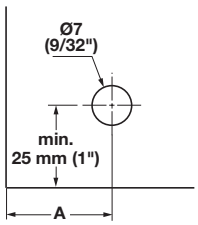

Glass Thickness	A
4 (5/32")	19
5 (13/16")	18
6 (15/64")	17

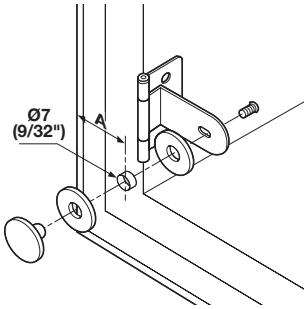

→ Mid-size

Cut Out Dimension

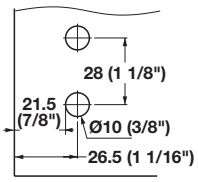

Pan Head #6

> For use in applications where resistance to corrosion is needed
> Requires 2–10 mm (1/16"–3/8") drill holes in the glass
> For glass thickness: 5–8 mm (3/16"–5/16")
> Door W x H: max. 650 x 900 mm (25 9/16" x 35 7/16")
> Door weight: max. 12 kg (26.4 lbs.)/ pair
> Material: 304 Stainless Steel; Cover: Zinc; Finish: chrome-plated

	Item No.
	361.46.040

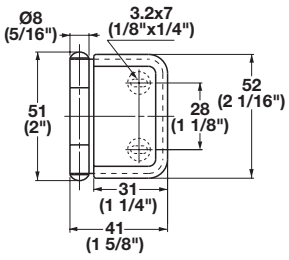

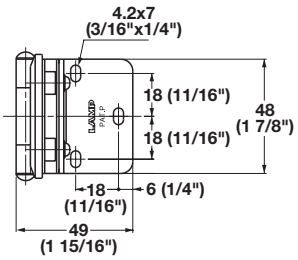

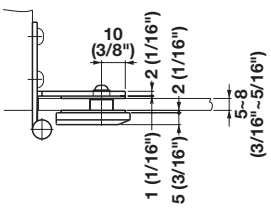

Flat head screws	pages 12.7-12.8, 12.10, 12.13
Pan head screws	pages 12.9-12.10

Dimensional data not binding. Dimensions in mm, inches are approximate. We reserve the right to alter specifications without notice.

Salice

> Self-closing
> Screw mounted
> Glass thickness: 4–6 mm (3/16"–1/4")
> Side panel thickness: from 16 mm (5/8")
> Tab: 5.5–6.5 mm (3/16"–1/4")
> Trim shim and screws included
> Material: Steel

→ Hinge

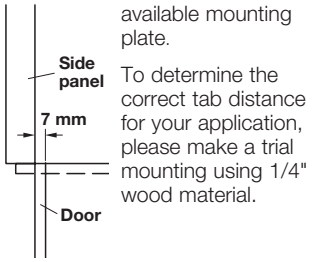

Protrusion shown is based on straight arm and smallest available mounting plate.

To determine the correct tab distance for your application, please make a trial mounting using 1/4" wood material.

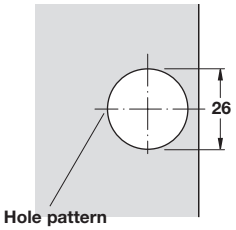

Opening angle: 94°

Mounting	Hinge arm	Model	Hinge type	Item No.
Full		C2C7A39	14.5	329.21.500
Half		C2C7G39	5.5	329.21.511
Inset		C2C7P39	-2.5	329.21.532

→ Trim Caps

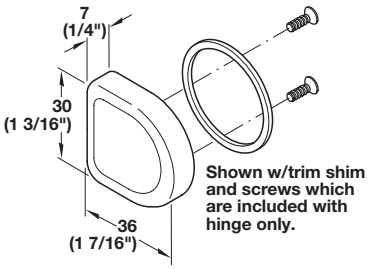

> D-shaped
> Material: Plastic

Color	Model	Item No.
chrome-plated polished	P2CBA06	329.22.220
silver	P2CBA09	329.22.920

→ Trim Caps

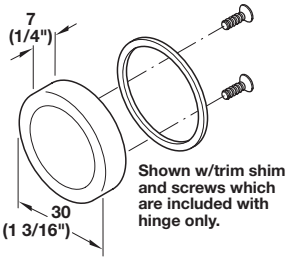

> Round
> Material: Plastic

Color	Model	Item No.
chrome-plated polished	P2CTA06	329.22.210
silver	P2CTA09	329.22.910
black	P2CTAX3	329.22.310

Mounting plates pages 9.37-9.42

Dimensional data not binding. Dimensions in mm, inches are approximate. We reserve the right to alter specifications without notice.

For Häfele A-Series

→ Hinges

full overlay

half overlay

Overlay	Item No.
Full	315.61.700
Half	315.61.701

→ Cover Caps

Finish	Item No.
chrome	315.59.080
black	315.59.081

Dimensional data not binding. Dimensions in mm, inches are approximate. We reserve the right to alter specifications without notice.

Salice

> Glass drilling is not required
> Possible fixing inset distance on the door (K): from 0 to 22 mm (7/8")
> Material: Steel; Finish: nickel-plated

Note
Salice Series B (CBG) hinges have been developed for use on glass doors and mirrors. Salice will accept no responsibility for any problems associated with the type of adhesive or method of application when used in conjunction with Series B hinges, nor for any consequences of the incorrect mounting of the door. It is recommended that the selected adhesive is subjected to prior testing. The adhesive may be considered appropriate if the plate, when fixed to the glass, can sustain a minimum torsion load of 160 Nm.

→ Hinge

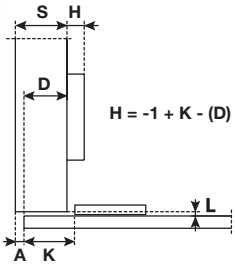

Description	Model	Item No.
Hinge	CBG2A99	329.43.500
Hinge plate	-	329.43.509

Note
The hinge plate must be attached to the glass door or mirror by a special adhesive. We recommend that this operation is carried out by a specialist company. For further information on adhesives and their application, please contact the adhesive manufacturer or your glass supplier.

→ Clip Mounting Plate

> Screw mounted; spring lever
> With independent vertical and depth adjustment with cam
> Material: Steel/Zinc

Finish	Model	Item No.
nickel-plated	BAR3R09	329.71.500

Flat head wood screws page 12.13

Dimensional data not binding. Dimensions in mm, inches are approximate. We reserve the right to alter specifications without notice.

Glass Door Hinges

> For inset doors
> With exposed axle and spring
> Opening angle depends on glass thickness
> 3-dimensionally adjustable for door alignment with millimeter accuracy
> Glass thickness: max. 10 mm (3/8")

Glass thickness A	4	5	6	7	8	10
Min. chamfer B	–	1 x 45°	2 x 45°	3 x 45°	4 x 45°	6 x 45°

→ Glass to Glass Hinge

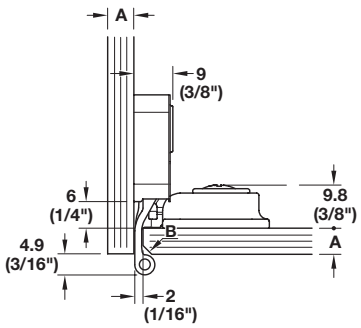

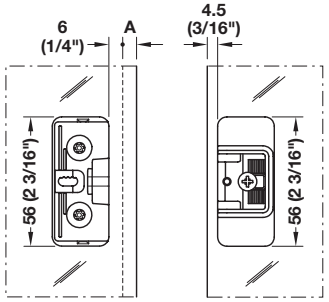

Gluing diagram for cabinet side panel

Gluing diagram for door

> For glue mounting
> Adjustment facility: side adjustment: +2 mm (1/16")
height adjustment: ±2 mm (1/16")
depth adjustment: ±2 mm (1/16")
> Opening angle: up to 220°
> Material: Stainless Steel, matt

	Item No.
	344.89.080

Supplied With
Mounting Instructions

→ Glass to Wood Hinge

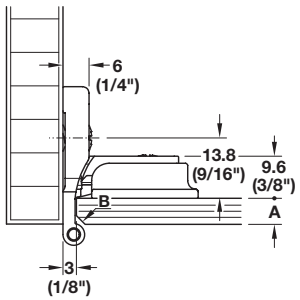

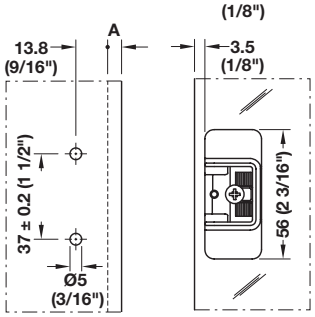

Drilling pattern for cabinet side

Gluing diagram for door

> For glue or screw mounting to the side panel
> Adjustment facility: side adjustment: +2 mm (1/16")
height adjustment: ±1 mm (1/32")
> Opening angle: up to 195°
> Material: Zinc Alloy
Adapter for glue mounting: Stainless Steel, matt

Finish	Item No.
nickel-plated	344.89.090

Supplied With
Mounting Instructions

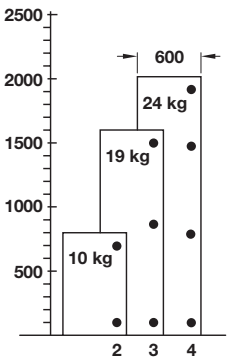

Number of hinges per door

> Sample measurements for 8 mm (5/16") thick glass
> Hinge distance min. 500 mm (19 11/16")
> Door width up to 600 mm (23 5/8")
> The door's width must not exceed its height

Dimensional data not binding. Dimensions in mm, inches are approximate. We reserve the right to alter specifications without notice.

Aximat®

> Available for overlay and inset doors
> Elegant front plate and only 5 mm (3/16") of knuckle is visible
> Integrated catch keeps doors closed, no additional magnetic catches required
> Height adjustment ± 1 mm with oblong holes
> Door overlay (side to side) adjustment +1 mm with oblong holes
> Screw mounted
> Material: Zinc; Finish: matt nickel

→ Glass to Wood Hinge

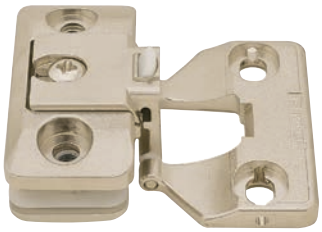

> Side panel thickness: min. 19 mm (3/4")

Opening angle	Overlay	Item No.
230°	Door overlay 3 (1/8") + knuckle 3 (1/8") = 6 (1/4")	344.89.760
180°	Inset = 3 (1/8") gap between door and side panel	344.89.750

Supplied With
Mounting screws
Plastic protective spacers for glass

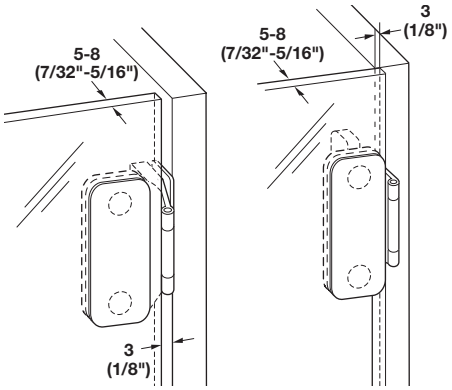

→ Glass to Glass Hinge

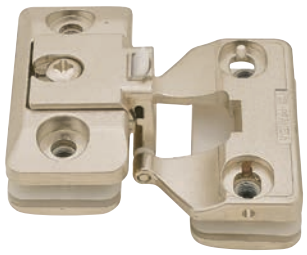

Opening angle: 180°

> Inset: 3 mm (1/8") gap between door and side panel

Finish	Item No.
matt nickel	344.88.720

Supplied With
Mounting screws
Plastic protective spacers for glass

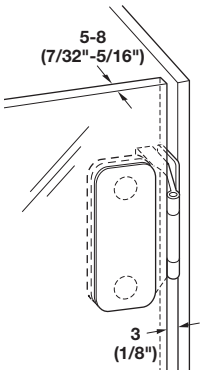

Dimensional data not binding. Dimensions in mm, inches are approximate. We reserve the right to alter specifications without notice.

Custom Order Doors

How to order:

1. Select frame profile and glass
2. Hinge type and overlay
3. Provide details and dimensions on hinge sizes and drilling locations

> Hinged doors: Hinge attachment through machined cutouts
> Material: Aluminum

Service+

→ Profile

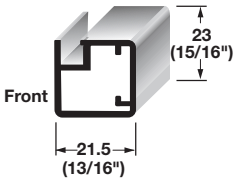

> 21.5 × 23 mm (13/16" × 15/16")

Finish	Item No.
anodized, matt	563.55.931
brushed stainless steel	563.55.031
polished aluminum	563.55.531
white	563.55.731
bronze	563.55.131
black	563.55.331

→ Profile

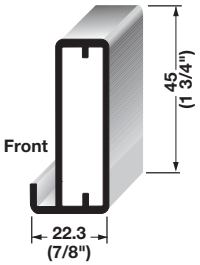

> 22.3 × 45 mm (7/8" × 1 3/4")

Finish	Item No.
anodized, matt	563.56.931
brushed stainless steel	563.56.031
white	563.56.731
bronze	563.56.131
black	563.56.331

→ Profile

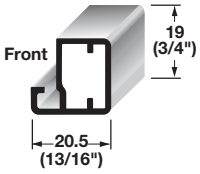

> 20.5 × 19 mm (13/16" × 3/4")

Finish	Item No.
anodized, matt	563.55.911

→ Profile

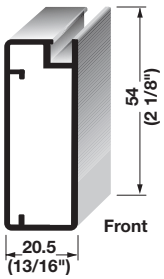

> 20.5 × 54 mm (13/16" × 2 1/8")

Finish	Item No.
anodized, matt	563.55.322
brushed stainless steel	563.55.022
white	563.55.722
bronze	563.55.122
black	563.55.422

Dimensional data not binding. Dimensions in mm, inches are approximate. We reserve the right to alter specifications without notice.

Custom Order Doors

How to order:
1. Select frame profile and glass
2. Hinge type and overlay
3. Provide details and dimensions on hinge sizes and drilling locations

> Hinged doors: Hinge attachment through machined cutouts
> Material: Aluminum

Service+

→ Profile

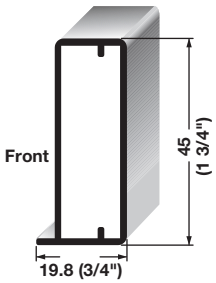

> 19.8 × 45 mm (3/4" × 1 3/4")

Finish	Item No.
anodized, matt	563.56.961
brushed stainless steel	563.56.061
white	563.56.761
bronze	563.56.161
black	563.56.361

→ Profile

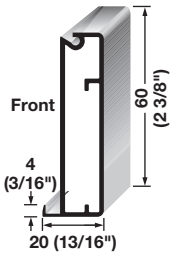

> 20 × 60 mm (13/16" × 2 3/8")

Finish	Item No.
anodized, matt	563.55.351
white	563.55.751
bronze	563.55.151
black	563.55.451

→ Profile

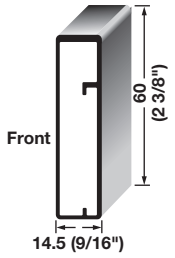

> 14.5 × 60 mm (9/16" × 2 3/8")

Finish	Item No.
anodized, matt	563.55.371
white	563.55.771
bronze	563.55.171
black	563.55.471

→ Profile

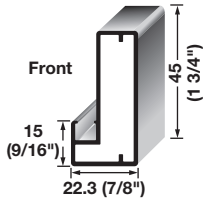

> 22.3 × 45 mm (7/8" × 1 3/4")

Finish	Item No.
anodized, matt	563.55.361
brushed stainless steel	563.55.061
white	563.55.761
bronze	563.55.161
black	563.55.461

→ Profile

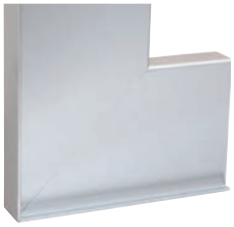

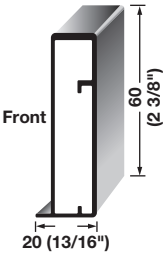

> 20 × 60 mm (13/16" × 2 3/8")

Finish	Item No.
anodized, matt	563.55.381
brushed stainless steel	563.55.081
polished aluminum	563.55.581
white	563.55.781
bronze	563.55.181
black	563.55.481

Dimensional data not binding. Dimensions in mm, inches are approximate. We reserve the right to alter specifications without notice.

Custom Order Doors

Service+

Note
For use only with Air Hinge, see page **9.33**

→ Air Hinge Profile

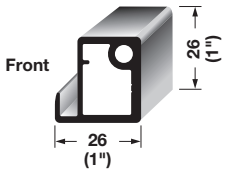

> 26 × 26 mm (1" × 1")
> Material: Aluminum

Finish	Item No.
anodized, matt	563.55.391
titanium	563.55.291

→ Air Hinge Profile

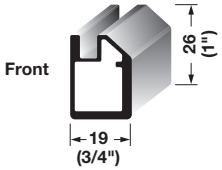

> 19 × 26 mm (3/4" × 1")
> Material: Aluminum

Finish	Item No.
anodized, matt	563.55.941
titanium	563.55.241

Dimensional data not binding. Dimensions in mm, inches are approximate. We reserve the right to alter specifications without notice.

Handles

> Material: Aluminum

Service+

→ Handle

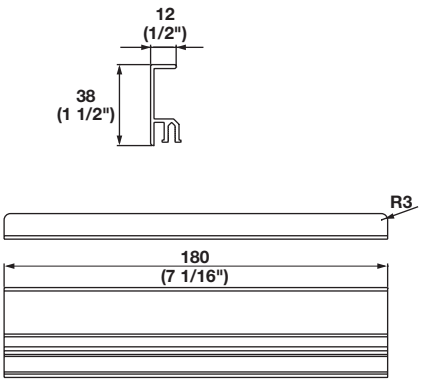

> 180 x 12 × 38 mm (7 1/16" x 1/2" × 1 1/2")

Finish	For use with profile	Item No.
brushed stainless steel	563.55.022, 563.56.031, 563.55.031, 563.56.061, 563.55.061, 565.55.081	563.25.975
matt	563.55.322, 563.56.931, 563.55.931, 563.56.961, 563.55.361, 563.55.371, 563.55.381	563.25.976
white	563.55.722, 563.56.731, 563.55.731, 563.56.761, 563.55.761, 563.55.771, 563.55.781	563.25.977
black	563.55.422, 563.56.331, 563.55.331, 563.56.361, 563.55.461, 563.55.471, 563.55.481	563.25.978
bronze	563.55.122, 563.56.131, 563.55.131, 563.56.161, 563.55.161, 563.55.171, 563.55.181	563.25.979

→ Handle

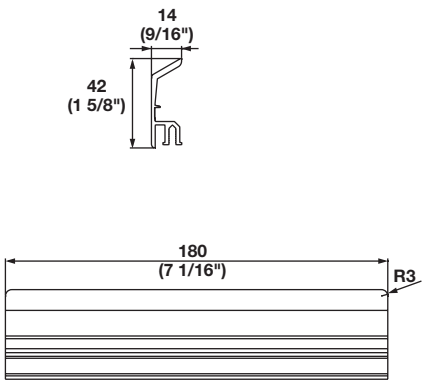

> 180 x 14 × 42 mm (7 1/16" x 9/16" × 1 5/8")

Finish	For use with profile	Item No.
matt	563.55.351	563.25.971
white	563.55.751	563.25.972
black	563.55.451	563.25.973
bronze	563.55.151	563.25.974

Dimensional data not binding. Dimensions in mm, inches are approximate. We reserve the right to alter specifications without notice.

Custom Order Glass

Service+

> Specify glass for use with aluminum glass profiles
> Please inquire for additional glass options
> All etch finishes use low iron glass and acid etch front
> Low Iron glass, available upon request

Barcode Etch

Black Etch

Caffe Etch

Cannes Etch

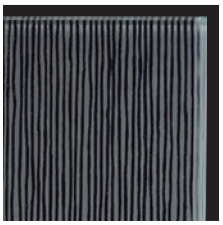

Gray Celsius Etch Mirrored

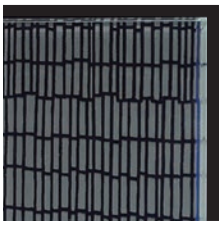

Clear Low Iron

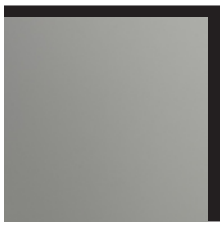

Clear Grey Tinted

Clear Wasabi

Clear Ice White

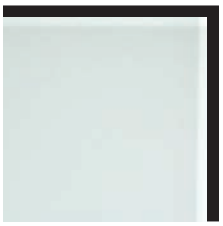

Ice White Etch

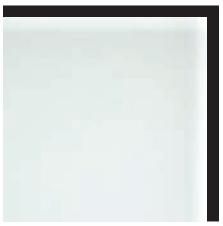

Jet Etch

Clear Mirror

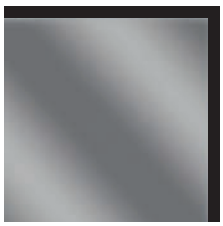

Pearl Etch

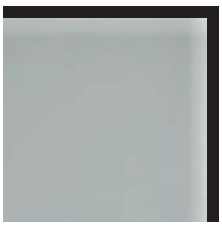

Gold Etch

Cherry Linen Etch

Silk Etch

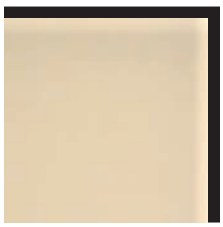

Clear Sky

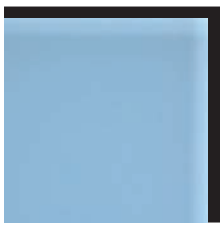

Soft Etch Low Iron

Soft Etch Mirrored

Structure Etch

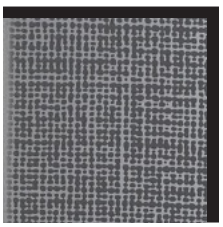

Bronze Etch Mirrored

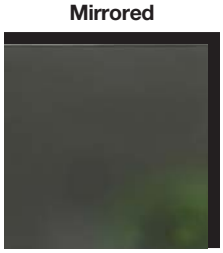

Bronze Celsius Etch Mirrored

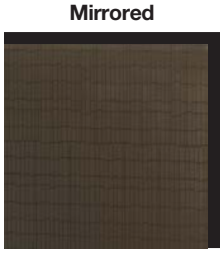

Black Timber

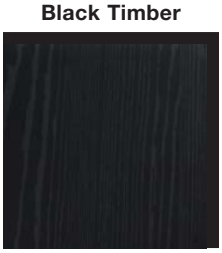

Dimensional data not binding. Dimensions in mm, inches are approximate. We reserve the right to alter specifications without notice.

Salice

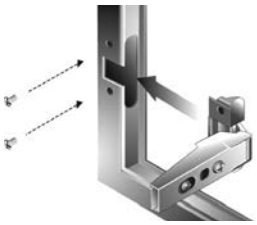

> Developed for use with metal profiles
> A Ø3.5 x 9.5 mm (#6 x 3/8") countersunk sheet metal screw to attach hinge to frame is recommended
> To be used with aluminum doors on pages **9.181-9.182**

Service+

→ Hinge

Opening angle: 105°

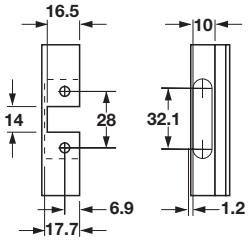

> For use with profiles: 563.55.931, 563.55.031, 563.55.911
> Screw mounted
> Self-closing
> Material: Steel; Finish: nickel-plated

Mounting	Hinge arm	Model	Item No.
Full overlay		C2Z6A99	329.23.610
Half overlay		C2Z6G99	329.23.630

→ Trim Caps

> For hinge arm
> Material: Plastic

Color	Model	Item No.
white	S2XX83A1	329.18.700
black	S2XX83A3	329.18.308

→ Mounting Screws

> Self-tapping sheet metal screw for attaching hardware to aluminum frame doors
> Phillips #7 x 1/2", CSK with undercut head
> Material: Steel

Finish	Item No.
zinc-plated	010.94.902

Supplied With 50 pcs.

→ Wing Mounting Plates

> For center/common panels
> With pre-installed 7.5 mm euro screws
> Material: Steel; Finish: nickel-plated

Height	Model	Item No.
0	BARGR09/20	329.71.530
3	BARGR39/20	329.71.533

→ Wing Mounting Plates

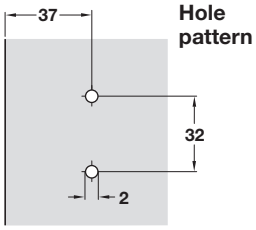

Hole pattern

> Screw mounted
> Spring lever
> With independent vertical and depth adjustment
> Material: Steel; Finish: nickel-plated

Height	Model	Item No.
0	BAR3R09	329.71.500
2	BAR3R29	329.71.502
3	BAR3R39	329.71.503
6	BAR3R69	329.71.506
9	BAR3R99	329.71.508
12	BAR3RC9	329.71.509

→ Wing Mounting Plates

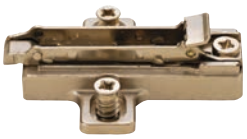

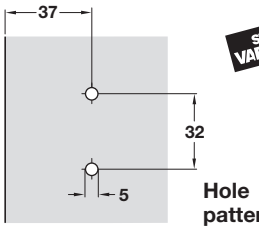

SYSTEM VARIANTA 32

Hole pattern

> Screw mounted
> Spring lever
> With independent vertical and depth adjustment
> with pre-installed 11 mm euro screws
> Material: Steel; Finish: nickel-plated

Height	Model	Item No.
0	BARGR09/16	329.71.510
2	BARGR29/16	329.71.512
3	BARGR39/16	329.71.513
6	BARGR69/16	329.71.516
9	BARGR99/16	329.71.518
12	BARGRC9/16	329.71.519

Dimensional data not binding. Dimensions in mm, inches are approximate. We reserve the right to alter specifications without notice.

Cut-To-Size Doors

> Easy to assemble aluminum door that requires no special drilling for the hinges
> Use with glass or panels with a thickness of 4 mm (5/32")

Service+

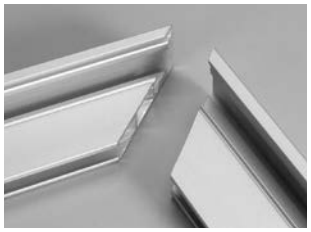

1. Miter the ends 45°.

2. Slide the brackets into the ends.

3. Slide the hinges into the sides.

Inside aluminum door profile

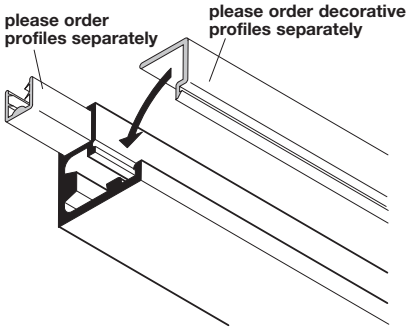

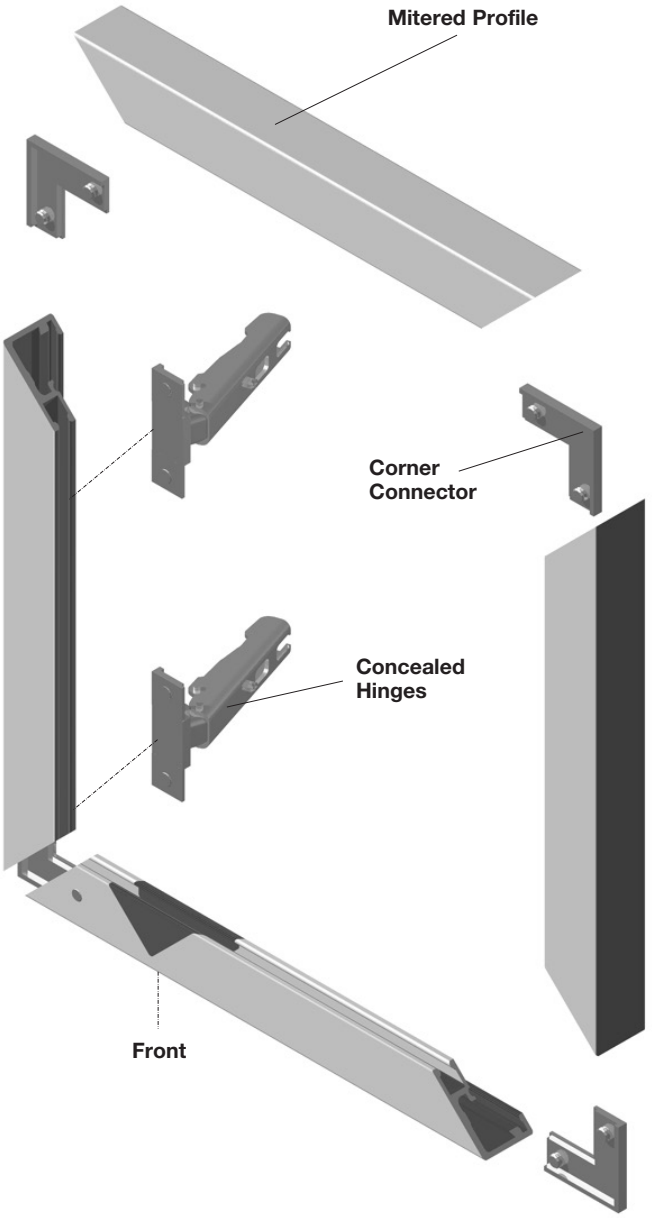

Dimensional data not binding. Dimensions in mm, inches are approximate. We reserve the right to alter specifications without notice.

Cut-To-Size Doors

Service+

> Easy fabrication, only a 45° miter cut is needed
> Ability to make individually sized frames
> Aluminum saw blade recommended for miter cut
> No drilling required; hinges slide into aluminum profile
> For glass thickness: 4 mm (5/32")
> Length: 2.5 m (8' 2 7/16")
> Material: Aluminum

→ Profile

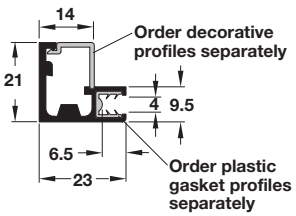

Finish	Item No.
silver colored anodized	563.25.902
stainless steel look	563.25.002

Note
Glass size = 34 mm (1 5/16") less height and width of aluminum frame.

→ Profile

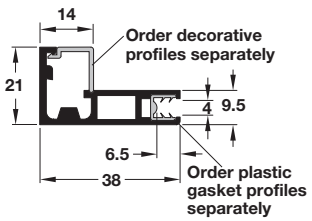

Finish	Item No.
silver colored anodized	563.26.902
stainless steel look	563.26.002

Note
Glass size = 65 mm (2 1/2") less height and width of aluminum frame.

→ Profile

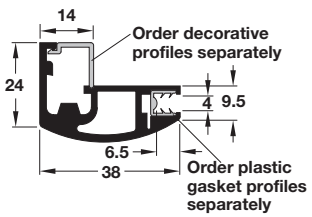

Finish	Item No.
silver colored anodized	563.27.902
stainless steel look	563.27.002

Note
Glass size = 65 mm (2 1/2") less height and width of aluminum frame.

→ Profile

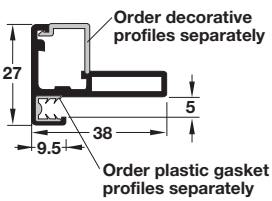

Finish	Item No.
silver colored anodized	563.26.912
stainless steel look	563.26.112

Note
Glass size = 6 mm (1/4") less height and width of aluminum frame. Decorative profiles and plastic gasket on next page. Profile can not be used for inset application.

→ Profile

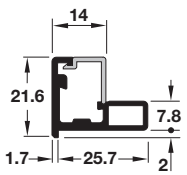

Finish	Item No.
silver colored anodized	563.26.922
stainless steel look	563.26.022

Note
Glass size = 4 mm (5/32") less height and width of aluminum frame.

Dimensional data not binding. Dimensions in mm, inches are approximate. We reserve the right to alter specifications without notice.

Cut-To-Size Doors

Service+

> No drilling required
> Pre-attached slotted screws secure hinge to aluminum frame

→ H-Series Hinges

Opening angle: 110°

Flat Head #6

> Self-closing
> Material: Steel; Finish: nickel-plated

Mounting	Hinge arm	Item No.
Full		563.25.940
Half		563.25.941
Inset		563.25.942

→ Flanged Mounting Plate

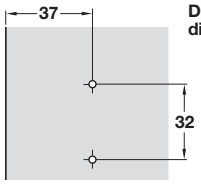

Drilling diagram

> One-piece
> screw mounted
> With ready-installed hinge-arm retaining screws
> Edge spacing 37 mm (1 1/2")
> With vertical adjustment (via slots)
> Material: Steel; Finish: nickel-plated matt

Height	Item No.
4	316.51.504

→ Decorative Profile

> For mounting on inside door frame of aluminum profile
> Length: 2.5 m (8' 2 7/16")
> Material: Plastic

Color	Item No.
silver colored	563.25.932

→ H-Series Hinges

Opening angle: 110°

> Clip-on, self-closing
> Material: Steel; Finish: nickel-plated

Mounting	Hinge arm	Item No.
Full		563.25.945
Half		563.25.946
Inset		563.25.947

Note
Use with 318.61.504 mounting plate, below.

→ Clip Mounting Plate

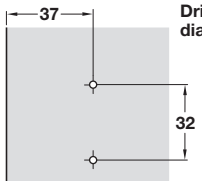

Drilling diagram

> Clip-on
> Material: Steel; Finish: nickel-plated

Height	Item No.
4	318.61.504

→ Handles

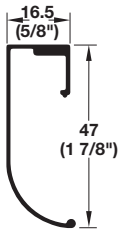

> L x W x H: 80 x 17 x 47 mm (3 1/8" x 11/16" x 1 7/8")
> Material: Aluminum

Finish	Item No.
stainless steel look	563.25.095
silver colored anodized	563.25.995

Dimensional data not binding. Dimensions in mm, inches are approximate. We reserve the right to alter specifications without notice.

Cut-To-Size Doors

Service+

> No drilling required
> Pre-attached slotted screws secure hinge to aluminum frame

→ Corner Connector

> With 2 clamping screws for 23 mm (15/16") wide aluminum frame profiles to connect miters
> Material: Zinc Alloy

Finish	Item No.
nickel-plated	563.25.910

Note
4 pcs. required per frame.

→ Corner Connector

> With 4 clamping screws for 38 mm (1 1/2") wide aluminum frame profiles to connect miters
> Material: Zinc Alloy

Finish	Item No.
nickel-plated	563.25.912

Note
4 pcs. required per frame.

→ Lid Stay Adapter Bracket

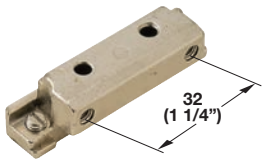

> Insert into frame before mounting the glass panels
> Material: Zinc

Finish	Item No.
nickel-plated	563.25.960

Supplied With
2 Mounting screws

Note
Can be used with Duo lid stay and 373.66.693 as the door bracket,
see page **9.140**

→ Plastic Gasket Profile

> For glass or panel inserts
> For glass panel thickness of 4 mm (5/32")
> Insert into frame before mounting the glass panels
> Length: 2.5 m (8' 2 7/16")
> Material: Plastic, transparent

	Item No.
	563.25.924

Dimensional data not binding. Dimensions in mm, inches are approximate. We reserve the right to alter specifications without notice.

Metallic Cabinet Accents

Satin/Brushed Aluminum

Polished Chrome

Satin/Brushed Brass

Light Bronze

Matt Black

> Anodized aluminum creates bright & beautiful metal accents
> Double-sided UHB tape is available to securely adhere strapping and bars, see below

→ Aluminum Strapping

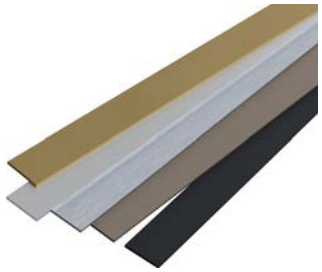

→ .25" x .75" Aluminum Bar

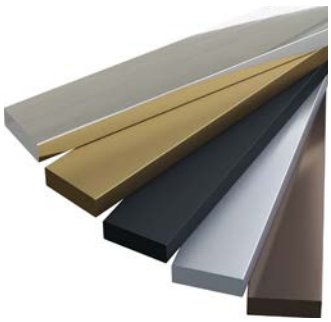

> Use as an onlay or inset into a cabinet frame or door
> W x H x L: .75" X .25" X 72"

Finish	Item No.
satin/brushed aluminum	194.80.023
polished chrome	194.80.223
satin/brushed brass	194.80.523
light bronze	194.80.123
matt black	194.80.323

→ .75" Aluminum Strapping

> Use as an onlay or inset into a cabinet frame or door
> W x H x L: .75" X .063" X 72"

Finish	Item No.
satin/brushed aluminum	194.80.044
polished chrome	194.80.244
satin/brushed brass	194.80.544
light bronze	194.80.144
matt black	194.80.344

→ .096" x 1.25" Aluminum Strapping

> Use as an onlay or inset into a cabinet frame or door
> W x H x L: 1.25" x .096" x 72"

Finish	Item No.
satin/brushed aluminum	194.80.011
polished chrome	194.80.211
satin/brushed brass	194.80.511
light bronze	194.80.111
matt black	194.80.311

→ Double-sided UHB tape

> For use with all strapping and bars

W x L	Item No.
.1875" x 54'	003.58.113
.1875" x 8'	003.58.112
.5" x 108'	003.58.111
.5" x 8'	003.58.110

Dimensional data not binding. Dimensions in mm, inches are approximate. We reserve the right to alter specifications without notice.

Metallic Cabinet Accents

Satin/Brushed Aluminum

Polished Chrome

Satin/Brushed Brass

Light Bronze

Matt Black

> Anodized aluminum creates bright & beautiful metal accents
> Double-sided UHB tape is available to securely adhere strapping and bars, see page **9.190A**

→ .25" x .25" Aluminum Bar

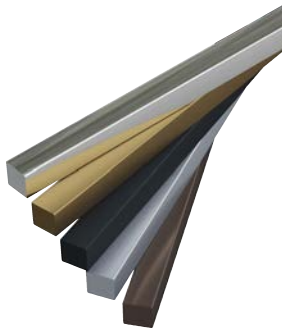

> Use as an onlay, apply to face of a cabinet or door
> W x H x L: .25" X .25" x 72"

Finish	Item No.
satin/brushed aluminum	194.80.032
polished chrome	194.80.232
satin/brushed brass	194.80.532
light bronze	194.80.132
matt black	194.80.332

→ .5" Aluminum Angle

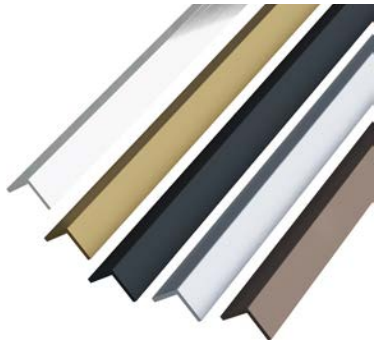

> Use as an onlay, apply to face of a cabinet or door
> W (each way) x H x L: .5" X .063" X 72"

Finish	Item No.
satin/brushed aluminum	194.80.000
polished chrome	194.80.200
satin/brushed brass	194.80.500
light bronze	194.80.100
matt black	194.80.300

Note
Polished chrome Aluminum Angle cannot be used in inner routing.

Dimensional data not binding. Dimensions in mm, inches are approximate. We reserve the right to alter specifications without notice.

Soft Close Magnetic Catches

soft&silent

Specifically designed to provide soft close on inset doors with free-swinging hinges. Typical application is high-end custom kitchen cabinets utilizing decorative free-swinging hinges.

- > Utilizes Neodymium magnets and Smove shock absorbers to gently pull doors closed
- > Magnets are separated by a rubber bumper to quietly close doors
- > Available for single or double-door applications
- > 2 units per door are recommended; 1 on top and 1 on bottom
- > Magnets are strong enough to pull in warped doors (up to 6 mm (1/4") approx.)
- > Can be used on frameless or face frame construction
- > Free-swinging hinges must be used
- > Wood Species: Maple

Note
Additional wood species available: unfinished red oak, cherry and walnut.

→ Double Door Catch

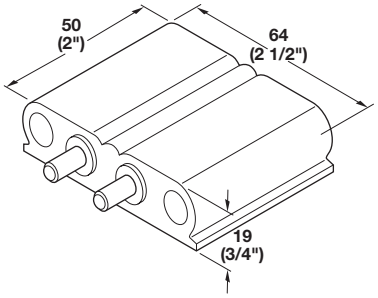

Finish	Item No.
clear coat	356.31.120
unfinished	356.31.130

Supplied With
Double catch with Smoves & magnets installed,
Mounting screws, 2 door magnets with matching mounting screws,
2 door bumpers

→ Single Door Catch

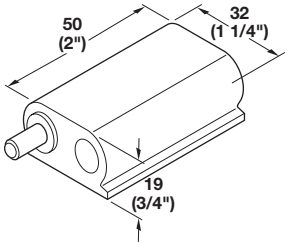

Finish	Item No.
clear coat	356.31.100
unfinished	356.31.110

Supplied With
L/H & R/H catches with Smoves & magnets installed
Mounting screws
2 door magnets with matching mounting screws
2 door bumpers

→ Drill Bit

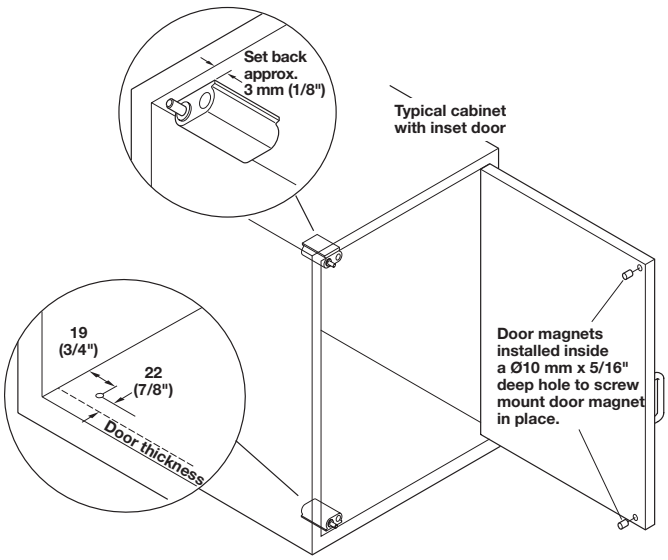

Note
Single catches are supplied in pairs; L/H and R/H. For appearance sake, they look better if top and bottom magnet align. They also tend to work better if magnet is closest to the hinge side.

- > 10 mm (3/8")
- > For door magnet

	Item No.
	006.47.076

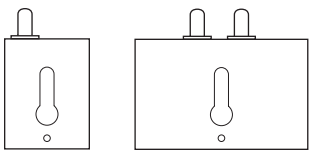

Note
Easy to install keyhole slot in bottom offers approx. 12 mm (1/2") of front-to-back adjustment. When proper location is established, install additional 16 mm (5/8") screw via hole in back.

Note
Recommended pilot hole location for keyhole screw:
19 mm (3/4") from side panel or edge of style on face frame cabinets
Set back from front edge; door thickness + 22 mm (7/8")
For face frame construction, please provide your own shims if cabinet floor is not flush with top of rail.

Dimensional data not binding. Dimensions in mm, inches are approximate. We reserve the right to alter specifications without notice.

Grass Unisoft

- For face frame cabinets on all door overlays
- For frameless cabinets on full overlay doors
- Blends in well with hinge finish
- Non-handed with a low profile design
- Manually adjustable to desired closing speed
- Easy to mount by locating in the corner
- Has scratch protector and front bumper with cushion for a quiet close

→ Soft Close for Doors

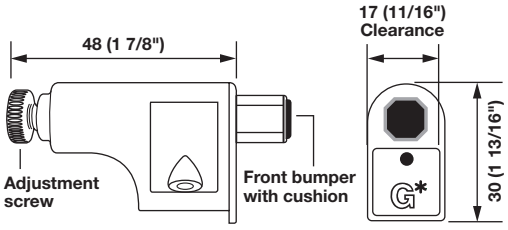

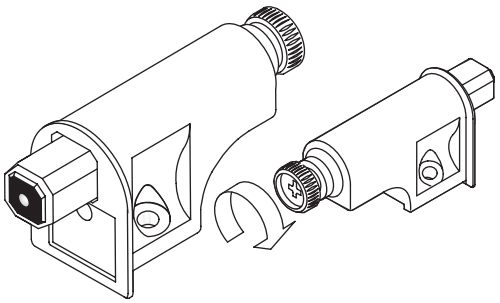

Adjustment
Turn adjustment screw to move damper in and out. Adjust in for heavier doors or out for light doors. Use Phillips or Pozi drive screwdriver or adjust manually.

Item No.	Packing
356.15.650	1
356.15.652	25

Supplied With
#6 x 3/4" Pan head screw

Mounting

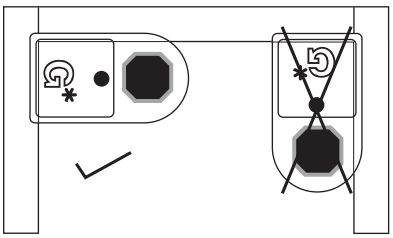

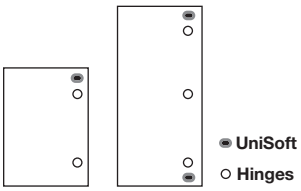

Number per door
Use one UniSoft for most applications. For heavier doors use two or more. Trial mount recommended.

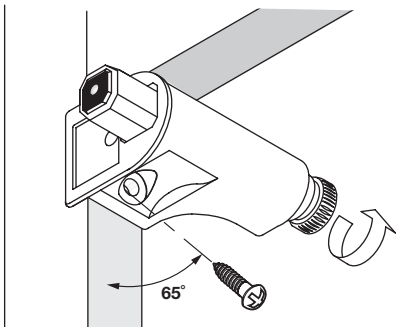

Important: Use a 65° angle for best mounting results. Pilot drill Ø2.3 mm (3/32") and 1/4" deep for a #6 x 3/4". Mount in upper corner on hinge side.

Dimensional data not binding. Dimensions in mm, inches are approximate. We reserve the right to alter specifications without notice.

Door Stops with Bumper

> For inset doors when self-closing concealed hinges are used
> Various door stop applications
> Material: Bracket: Steel
Bumper: Polyurethane, transparent

→ Single Door Bumper

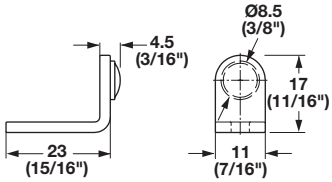

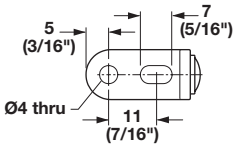

Finish	Item No.
nickel-plated	251.79.602

Supplied With
48 Brackets
48 Bumpers
Polybag

→ Double Door Bumper

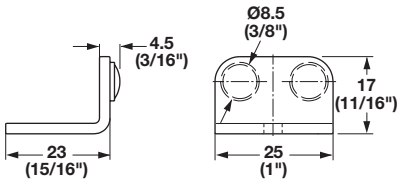

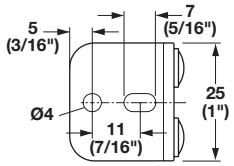

Finish	Item No.
nickel-plated	251.79.604

Supplied With
48 Brackets
96 Bumpers
Polybag

→ Bracket

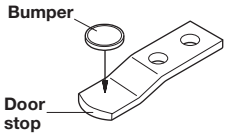

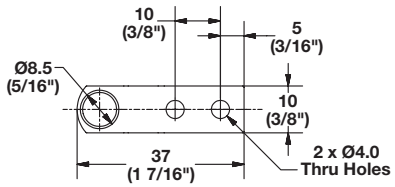

> Use with revolving kitchen corner units

Finish	Item No.
nickel-plated	251.79.600

Supplied With
48 Brackets
48 Bumpers
Polybag

Note
Bumpers do not come attached. Wood screws must be ordered separately.

Dimensional data not binding. Dimensions in mm, inches are approximate. We reserve the right to alter specifications without notice.

Door Stop Accessories

→ Trim Cap

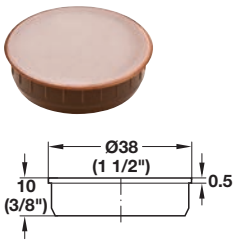

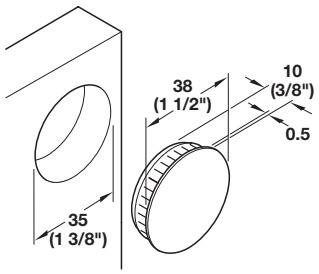

> For hinge cup holes
> Ø: 35 mm (1 3/8")
> Material: Plastic

Color	Item No.
white	340.41.702
brown	340.41.104

→ Drawer Bumper

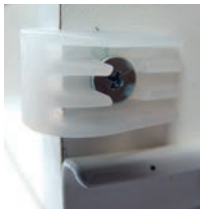

> Peel and stick or attach with screws
> Protects your cabinet doors
> Material: UHMW, transparent

	Item No.
	430.07.400

Supplied With
10 pcs.

→ Drawer Bumper Screws

> Material: Steel; Finish: zinc-plated

Length	Thread type	Item No.
#6 x 5/8"	full	430.07.409

Supplied With
100 pcs.

→ Cabinet Bumper

> Corrects overextended cabinet doors
> Camming action allows for fine adjustment
> Install with one #6 x 1/2" screw per bumper
> Material: Nylamax, transparent

	Item No.
	356.24.030

Supplied With
10 pcs.

Pan head screws pages 12.9-12.10

Dimensional data not binding. Dimensions in mm, inches are approximate. We reserve the right to alter specifications without notice.

Door Bumpers

→ Door Bumper

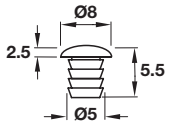

> Press-fit
> Material: Plastic, transparent

Item No.
356.16.025

→ Door Bumper

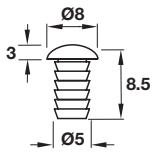

> Press-fit
> Material: Plastic, transparent

Item No.
356.17.010

→ Door Bumper

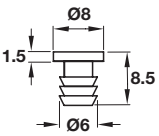

> Press-fit
> Material: Plastic, transparent

Item No.
356.20.421

→ Door Stop

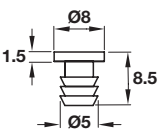

> Material: Plastic

Color	Item No.
black	356.16.315

→ Door Bumper

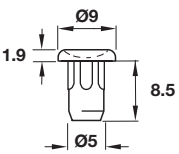

> Press-fit
> Material: Plastic, transparent

Item No.
356.18.010

→ Door Bumper

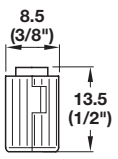

> Press-fit
> 2 piece silent touch
> Material: Plastic, transparent

Item No.
356.19.940

Dimensional data not binding. Dimensions in mm, inches are approximate. We reserve the right to alter specifications without notice.

Door Bumpers

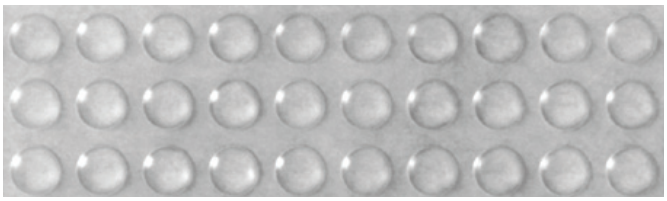

> Quick setting, synthetic rubber-based adhesive
> Manufactured with UV inhibitors to prevent yellowing over time
> UL 94 HB Approved (polyurethane bumpers)

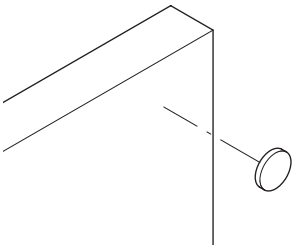

→ Silent Bumper 2, BS-58SD

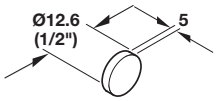

> Designed for use with face frame
> Material: 100% Polyurethane, transparent

Item No.	Packing
356.25.480	5,000 pcs.
356.25.485	1,000 pcs.

→ Silent Bumper, BS-22SD

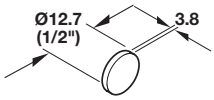

> Softer material and 2-stage impact reduces physical force of impact by more than half
> Material: 100% Polyurethane, transparent

Item No.	Packing
356.25.450	5,000 pcs.
356.25.455	1,000 pcs.

→ Door Bumper, BS-40

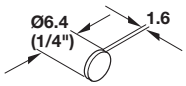

> Material: 100% Polyurethane, transparent

	Item No.
	356.25.445

Supplied With
1,734 pcs.

→ Door Bumper, BS-07

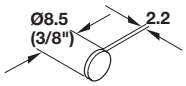

> Material: 100% Polyurethane, transparent

Item No.	Packing
356.21.428	5,040 pcs.
356.21.425	1,350 pcs.

Dimensional data not binding. Dimensions in mm, inches are approximate. We reserve the right to alter specifications without notice.

Door Bumpers

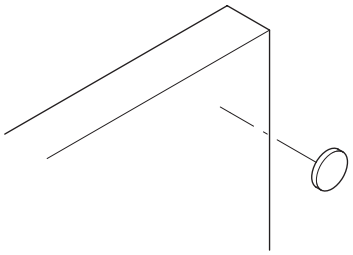

→ Door Bumper, BS-01

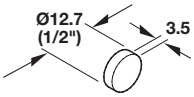

> Material: 100% Polyurethane, transparent

Item No.	Packing
356.25.400	5,000 pcs.
356.25.405	1,000 pcs.

→ Door Bumper, BS-20

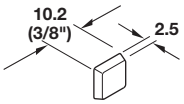

> Material: 100% Polyurethane, transparent

Item No.	Packing
356.25.410	5,082 pcs.
356.25.415	1,210 pcs.

→ Door Bumper

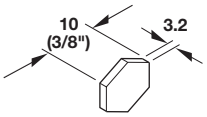

> Material: Foam

Color	Item No.
brown	356.25.121

Supplied With
1,080 pcs.

→ Door Bumper, BS-02

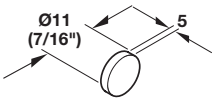

> Material: Plastic, transparent

	Item No.
	356.26.400

Supplied With
1,210 pcs.

→ Door Bumper, BS-67SD

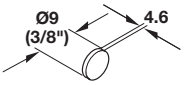

> Material: Plastic, transparent

	Item No.
	356.26.410

Supplied With
1,152 pcs.

Dimensional data not binding. Dimensions in mm, inches are approximate. We reserve the right to alter specifications without notice.

Door Bumpers

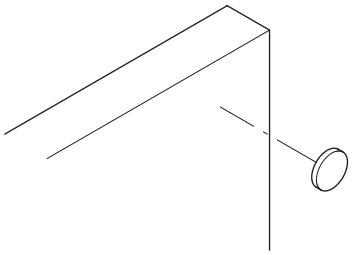

→ Door Bumper, BS-10

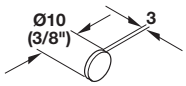

> Material: Plastic, transparent

	Item No.
	356.26.420

Supplied With
1,152 pcs.

→ Door Bumper, BS-05

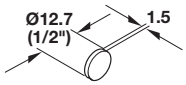

> Material: Plastic, transparent

	Item No.
	356.26.440

Supplied With
1,000 pcs.

→ Door Bumper, BS-08

> Self-adhesive backing
> W x L: 18 x 10 mm (11/16" x 7/16")
> Material: Polyurethane

Color	Item No.
black	356.25.330

Supplied With
98 pcs./sheet

Dimensional data not binding. Dimensions in mm, inches are approximate. We reserve the right to alter specifications without notice.

10

HÄFELE

LOCKS

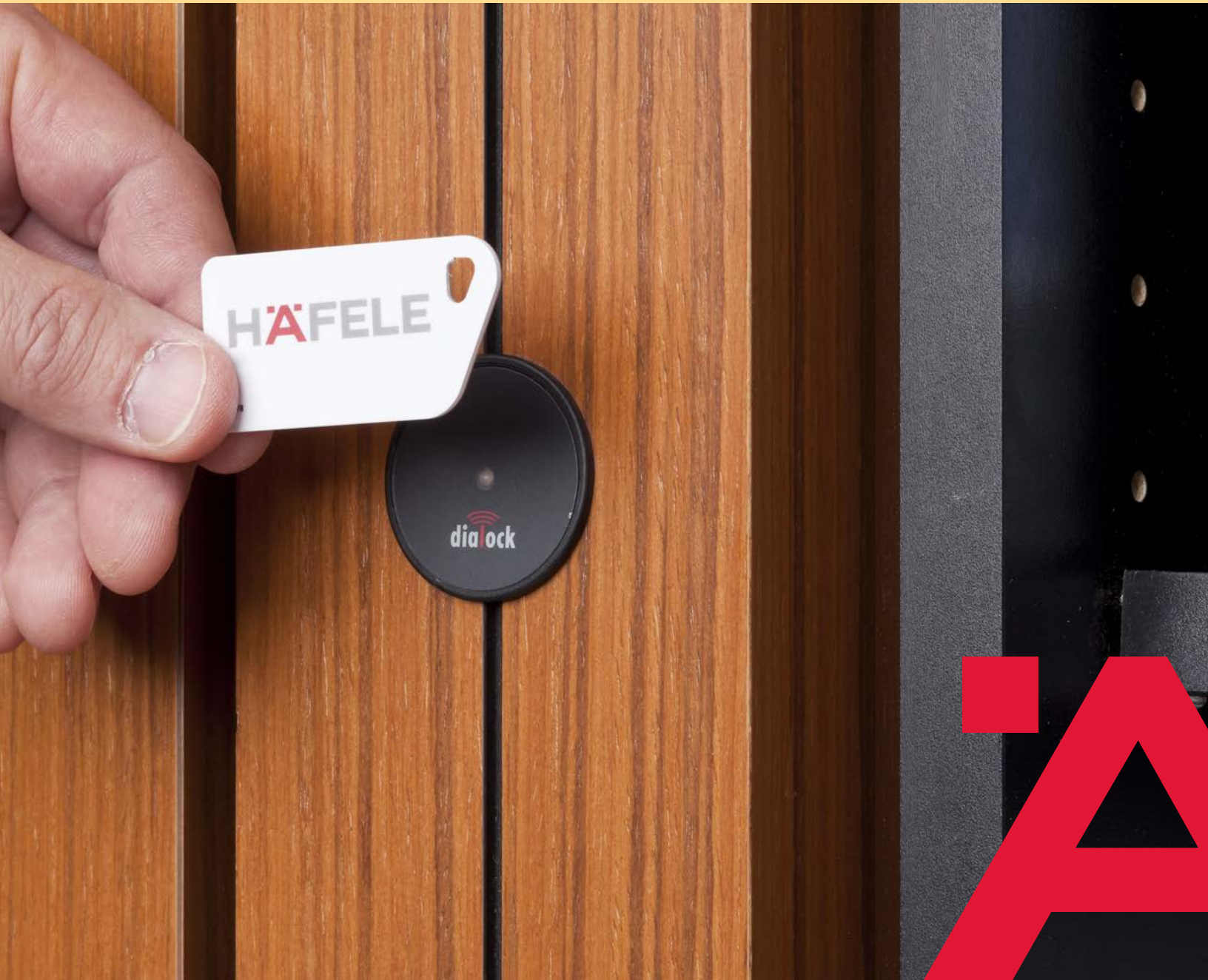

HÄFELE

Modular Removable Core Locking Systems

Timberline
Overview 10.4
Lock Cores 10.5
Cylinder Rosettes/Keys 10.6
Deadbolt Locks 10.7–10.8
Cam Locks 10.9
Glass Door Locks 10.10–10.11
Central Locking System 10.12–10.14
Gang Locks - Front Mount 10.15–10.16
Gang Locks - Side Mount 10.17
Accessories 10.18–10.19
Strikes 10.20
Anti-Tip System 10.21–10.22

Modular Removable Core Locking Systems

Symo 3000
Overview 10.23
Lock Cores/Keys 10.24–10.25
Deadbolt Locks 10.26
Cam Locks 10.27
Specialty Locks 10.28
Gang Locks - Side/Front Mount 10.29
Accessories 10.30–10.31
Glass Door Locks 10.32
Sliding Door Locks 10.33
Espagnolette Locks 10.33–10.35
Locking Ladder Pull
Ladder Pull 10.36

High Security Locks

National
Door Locks 10.37
Drawer Locks 10.38
Cam Locks 10.39–10.40
Sliding Door Locks 10.41
Spring Bolt Locks 10.42
C Series Cam Locks 10.43–10.47

Eco Force Lock 10.48
KABA Locks
Deadbolt Locks 10.49
Spring Bolt/Slam Locks 10.49

Keyed Cabinet Locks

SC Series
Cam Locks 10.50
Drawer Locks 10.51
Glass Door Locks 10.51–10.52

Built-In Gang Locking System Accessories

Lock Bars/Pins 10.53
Strike Plates 10.54

Dimensional data not binding. Dimensions in mm, inches are approximate. We reserve the right to alter specifications without notice.

Cabinet Locks

Automatic Door Bolt 10.55
Double Door Latch 10.55
Hasp/Cam Lock 10.56
Push Button Locks 10.57
Push Button Knobs and Rosettes 10.58-10.59
Cupboard Latches 10.60
Magnetic Safety Lock 10.60

Cabinet and Locker Locks

Combination Locks
DualAxess - National Lock 10.61
Combi-Code Locks 10.62
Mastercombi Locker Locks 10.63–10.64
Safe-O-Mat® - Wood Doors
500 Series Card Lock 10.65
800 Series Coin Return Lock 10.66
800 Series Coin Collect Lock 10.67
Safe-O-Mat - Metal Doors
S-6 Coin Return Lock 10.68
S-6 Coin Collect Lock 10.69
Safe-O-Mat Accessories 10.70

Electric and Electronic Cabinet Locking Systems

Battery Powered Electronic Systems
Overview 10.71
Stealthlock - RF Battery Lock 10.72–10.73
RegulatoR® Keypad Lock 10.74
Safe-O-Tronic® LS Series
LS 150 Key Pad Lock 10.75
LS 200 Key Pad Lock 10.76
Pin Code Lock 10.77–10.78
Häfele Dialock® LockerLock - RFID
LockerLock 10.79–10.81
EFL 50/EFL 51 10.82–10.83
Programming Cards 10.84
Personal Safes
Pointsafe 10.85–10.86

Häfele Dialock Electronic Access Control

Information 10.87–10.90
Electric Furniture Locks
EFL3/3C 10.91–10.96
EFL6 10.97–10.98
EFL41 10.99–10.100
MCL 1 Nano Lock 10.101
Furniture Terminal and Antennas
FT 200/FT 200 CAP 10.102–10.103
FAN 200 Antenna 10.104
Generators and Plugs 10.105
Multi-Lock Adapters
MLA 6P/CC200 Cables 10.106–10.107
MLA 8/CC 200 Cables 10.108–10.109
Accessories
CC 14 Distributor/Power Supply 10.110
Häfele Dialock Keys 10.111–10.112

Catches

Magnetic Catches 10.113–10.121
Pressure Catches 10.122–10.130
Non-Magnetic Catches 10.131–10.135
Bolts 10.136

Dimensional data not binding. Dimensions in mm, inches are approximate. We reserve the right to alter specifications without notice.

Modular Removable Core Locking Systems

The Concept
> Lock bodies are selected to meet the requirements of the cabinet, door, drawer or drawers
> The cores and keys are selected to meet the requirements for security, key control, locking plan and costs

Benefits
> If keys are lost, an owner may elect to replace the lock cores without removing the lock bodies
> Manufacturing processes and planning can progress without selection of keying requirements
> Manufacturers can create locking standards and offer varied levels of security based on keyway, key and core selection
> Manufacturers can fully produce like cabinets to inventory
> Keying requirements can be achieved with only the addition of cores and keys, installable at the project site

Components
> Keys: User Keys, Master Keys, Removal Keys
> Cores
> Lock Bodies
> Accessories

Häfele offers two modular systems:
(Components are not interchangeable)

→ Timberline

> Timberline provides an anti-tip system included in this section

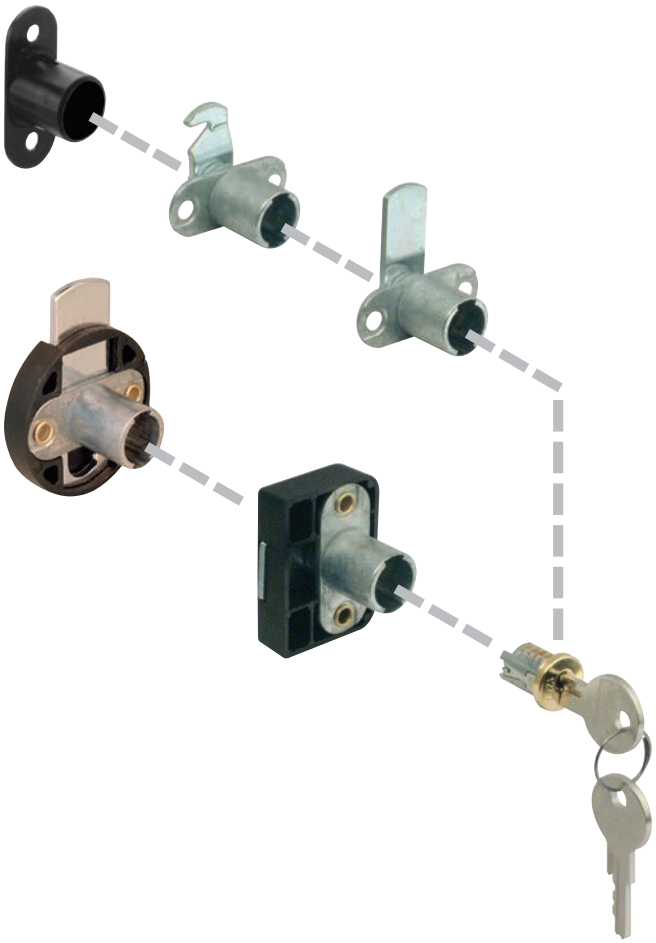

→ SYMO 3000

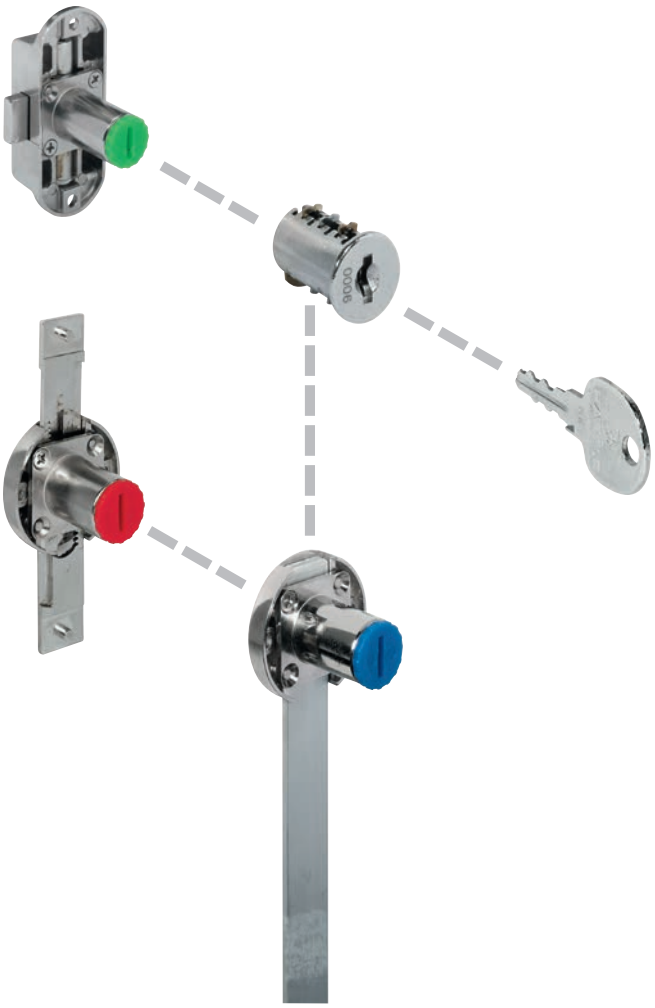

Dimensional data not binding. Dimensions in mm, inches are approximate. We reserve the right to alter specifications without notice.

Timberline Modular Removable Core Locking System

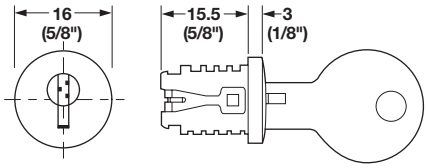

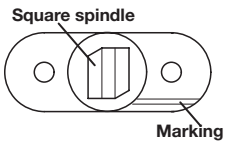

Note
The cylinder housings and lock cores are marked (see diagram above). A series of furniture doors can all be locked with the same direction of turn if the markings are positioned identically.

> Separates the lock core from cylinder housing
> Any combination of locking systems can be obtained
> Manufacturer can install fully functional locking systems
> Simplifies the planning and changing of locking systems
> Lock cores can be replaced with the aid of the removal key

→ Snap-In Lock Core

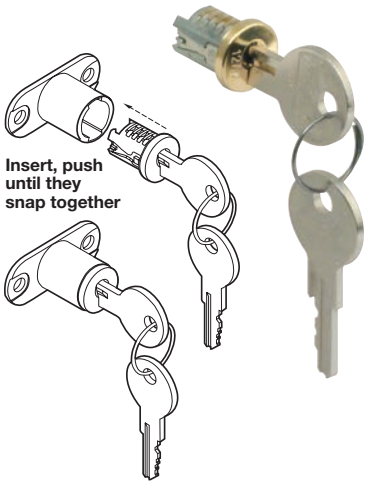

> For any cylinder body
> 5 plate levers = 900 possible key changes
> Material: Zinc die-cast, unfinished; Plate levers: Brass; Keys: Brass; Finish: nickel-plated

Keyed Different

Lock face	nickel polished	nickel matt	brass polished	bronzed epoxy	black epoxy	white epoxy
Item No.	210.04.606	210.04.710	210.04.803	210.04.106	210.04.302	210.04.500
Timberline No.	LP-100	LP-700	LP-500	LP-400	LP-300	LP-820

Keyed Alike

Lock face	nickel polished	nickel matt	brass polished	bronzed epoxy	black epoxy	white epoxy
Keying #'s	**Item No.**					
100 TA	210.04.615	210.04.720	210.04.812	210.04.115	210.04.311	210.04.510
101 TA	210.04.624	210.04.721	210.04.821	210.04.124	210.04.320	210.04.511
102 TA	210.04.633	210.04.722	210.04.830	210.04.133	210.04.339	210.04.512
103 TA	210.04.642	210.04.723	210.04.849	210.04.142	210.04.348	210.04.513
104 TA	210.04.651	210.04.724	210.04.858	210.04.151	210.04.357	210.04.514
105 TA	210.04.660	210.04.725	210.04.867	210.04.160	210.04.366	210.04.515
106 TA	210.04.679	210.04.726	210.04.876	210.04.179	210.04.375	210.04.516
107 TA	210.04.688	210.04.727	210.04.885	210.04.188	210.04.384	210.04.517
108 TA	210.04.697	210.04.728	210.04.894	210.04.197	210.04.393	210.04.518
109 TA	210.04.704	210.04.729	210.04.901	210.04.204	210.04.400	210.04.519

Supplied With
2 Keys

Dimensional data not binding. Dimensions in mm, inches are approximate. We reserve the right to alter specifications without notice.

Keys page 10.6

Timberline Modular Removable Core Locking System

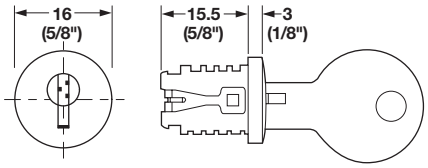

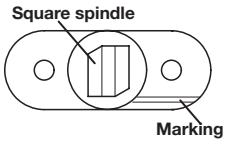

Note
The cylinder housings and lock cores are marked (see diagram above). A series of furniture doors can all be locked with the same direction of turn if the markings are positioned identically.

> Separates the lock core from cylinder housing
> Any combination of locking systems can be obtained
> Manufacturer can install fully functional locking systems
> Simplifies the planning and changing of locking systems
> Lock cores can be replaced with the aid of the removal key

→ Cylinder Rosette

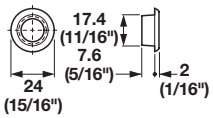

> For any cylinder body
> Material: Steel

Finish	Timberline No.	Item No.
nickel polished	BZ-100	210.04.062
nickel matt	BZ-700	210.04.070
brass polished	BZ-500	210.04.054
bronzed	BZ-400	210.04.017
black	BZ-300	210.04.035
white	BZ-800	210.04.071

Note
Requires Ø19 mm (3/4") hole for installation with lock cylinder.

→ Protective Cap

> Keeps interior of cylinder housing free of paint and dirt after lock is installed
> Material: PVC

Color	Timberline No.	Item No.
orange	CC-100	210.02.095

→ Removal Key

> To remove lock cores
> Material: Brass

	Timberline No.	Item No.
	KY-500-TA	210.02.004

→ Master Key

> Fits all TA lock cores, see page **10.5**
> Material: Brass

	Timberline No.	Item No.
	KY-101-TA	210.02.059

→ Replacement Key

> Special order only
> Specify key number at time of order
> Material: Brass

	Item No.
	210.02.009

Dimensional data not binding. Dimensions in mm, inches are approximate. We reserve the right to alter specifications without notice.

Timberline Modular Removable Core Locking System

→ Deadbolt Lock

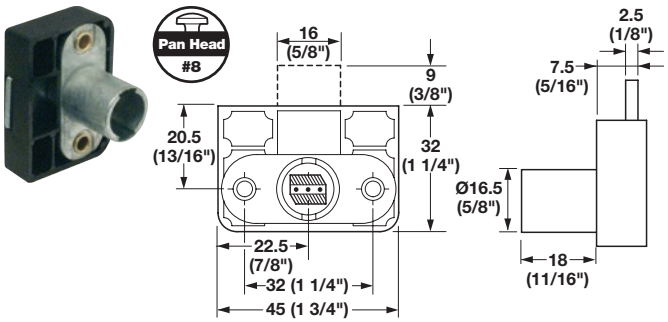

> Throw: 9 mm (3/8")
> Material: Lock case: Nylon; Color: black
Cylinder housing: Zinc die-cast, unfinished
Bolt: Steel; Finish: nickel-plated

Mounting	Timberline No.	Item No.
Left hand/right hand	CB-290	232.12.302
Drawer	CB-280	232.12.311

→ Deadbolt Lock

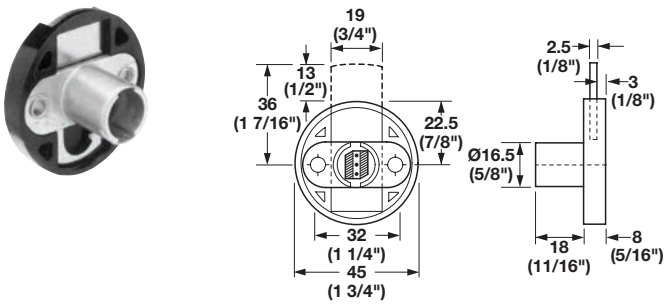

> Throw: 9 mm (3/8")
> Rotate cylinder core 180° to install
> Material: Lock case: Nylon; Color: black
Cylinder housing: Zinc die-cast, unfinished
Bolt: Steel; Finish: nickel-plated

Mounting	Timberline No.	Item No.
Left hand/right hand	CB-240	232.18.304
Drawer	CB-230	232.18.313

→ Deadbolt Lock with extended bolt

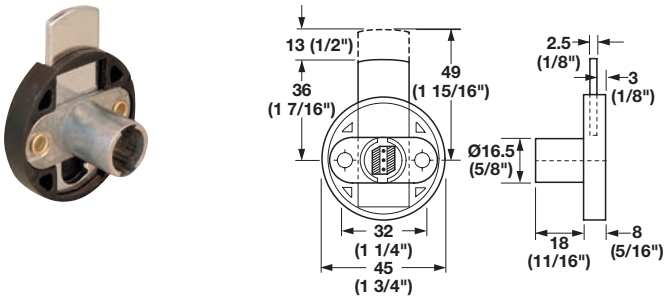

> Bolt starts at 36 mm (1 7/16") and extends to 49 mm (1 15/16")
> Rotate cylinder core 180° to install
> Material: Lock case: Nylon; Color: black
Cylinder housing: Zinc die-cast, unfinished
Bolt: Steel; Finish: nickel-plated

Mounting	Timberline No.	Item No.
Left hand/right hand	CB-241	232.18.306
Drawer	CB-231	232.18.316

→ Deadbolt Lock with extended bolt

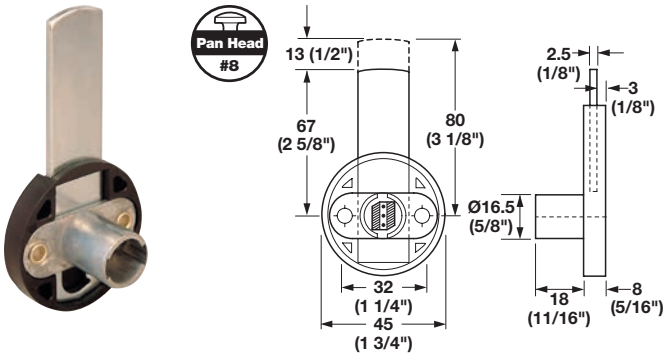

> Bolt starts at 67 mm (2 5/8") and extends to 80 mm (3 1/8")
> Rotate cylinder core 180° to install
> Material: Lock case: Nylon; Color: black
Cylinder housing: Zinc die-cast, unfinished
Bolt: Steel; Finish: nickel-plated

Mounting	Timberline No.	Item No.
Left hand/right hand	CB-242	232.18.322
Drawer	CB-232	232.18.332

Lock cores	page 10.5
Cylinder rosettes	page 10.6
Pan head screws	pages 12.9–12.10

Dimensional data not binding. Dimensions in mm, inches are approximate. We reserve the right to alter specifications without notice.

Timberline Modular Removable Core Locking System

→ Deadbolt Lock for double doors

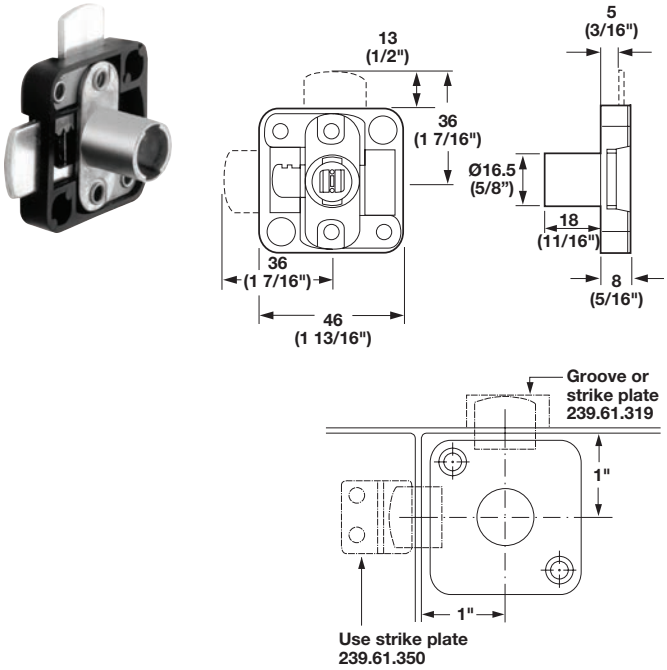

> With straight bolts
> Throw: 13 mm (1/2")
> Locks both doors without the need for lock strips or a spring catch
> Material: Lock case: Nylon; Color: black
Cylinder housing: Zinc die-cast

Mounting	Timberline No.	Item No.
Lower left hand or upper right hand	CB-250	232.35.300
Lower right hand or upper left hand	CB-255	232.35.301

→ Deadbolt Lock for double doors

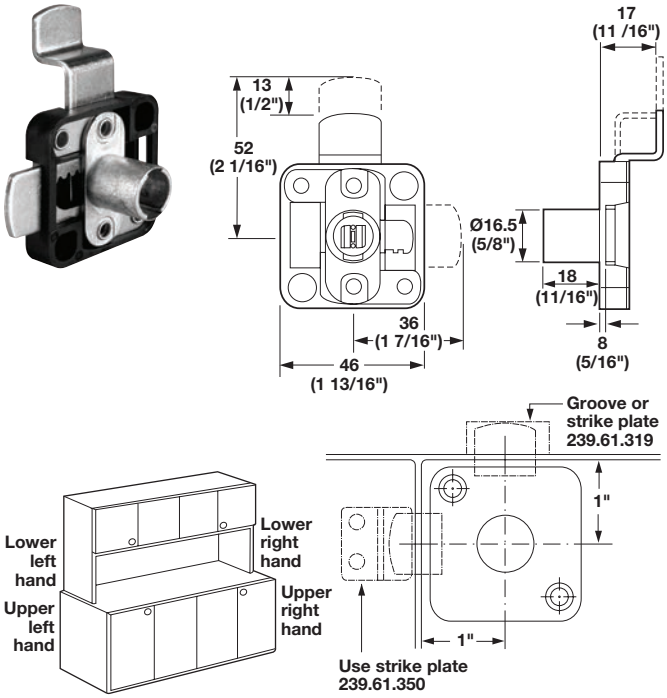

> With offset bolt for overlay doors
> Throw: 13 mm (1/2")
> Material: Lock case: Nylon; Color: black
Cylinder housing: Zinc die-cast

Mounting	Timberline No.	Item No.
Lower left hand or upper right hand	CB-251	232.35.302
Lower right hand or upper left hand	CB-256	232.35.303

→ Deadbolt Lock with offset bolt

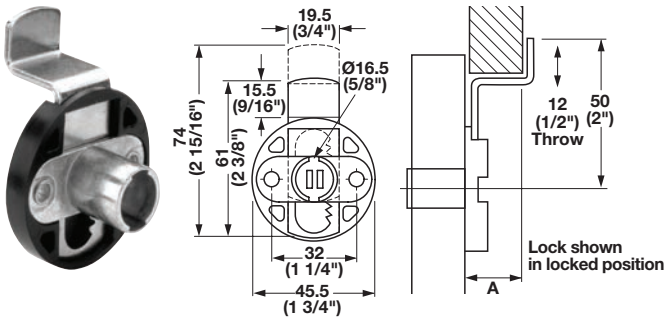

> For face-frame cabinets
> Throw: 13 mm (1/2")
> Rotate cylinder core 180° to install
> Material: Lock case: Nylon; Color: black
Cylinder housing: Zinc die-cast, unfinished
Bolt: Steel; Finish: nickel-plated

Mounting	A	Timberline No.	Item No.
Left hand/right hand	15 (9/16")	CB-244	232.18.348
Drawer	15 (9/16")	CB-234	232.18.358
Left hand/right hand	22 (7/8")	CB-245	232.18.350
Drawer	22 (7/8")	CB-235	232.18.360

Lock cores	page 10.5
Angle strike & strike plate	page 10.20

Dimensional data not binding. Dimensions in mm, inches are approximate. We reserve the right to alter specifications without notice.

Timberline Modular Removable Core Locking System

→ Cam Lock Body

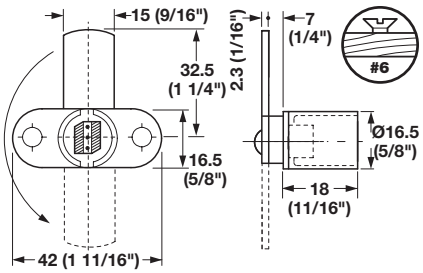

> With straight, extended cam
> Rotation: 180°
> Material: Cylinder housing: Zinc die-cast, unfinished
Lever: Steel; Finish: nickel-plated

Version	Timberline No.	Item No.
Horizontal installation drawer	CB-184	235.08.303
Vertical installation door	CB-194	235.08.358

→ Cam Lock Body

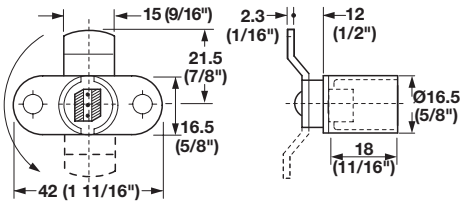

> With outward offset cam
> Material: Cylinder housing: Zinc die-cast, unfinished
Lever: Steel; Finish: nickel-plated

Version	Timberline No.	Item No.
Horizontal installation drawer, 180°	CB-185	235.08.009
Horizontal installation drawer, 90°	CB-085	235.08.018
Vertical installation door, 180°	CB-195	235.08.054

→ Cam Lock Spacer

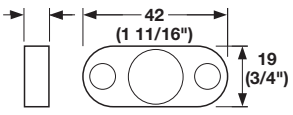

> Spaces locks in 16 mm (5/8") material
> Material: Nylon

Color	Timberline No.	Item No.
black	SP-300	210.02.080

Note
Use only with cam locks 235.08. series central lock above and 234.85.001, see page **10.16**.

Lock cores	page 10.5
Flat head wood screws	page 12.13

→ Cam Lock Body

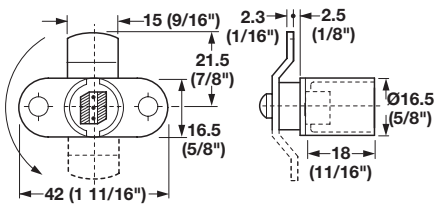

> With inward offset cam; Rotation: 180°
> Material: Cylinder housing: Zinc die-cast, unfinished
Lever: Steel; Finish: nickel-plated

Version	Timberline No.	Item No.
Horizontal installation drawer	CB-180	235.08.107
Vertical installation door	CB-190	235.08.152

→ Cam Lock Body

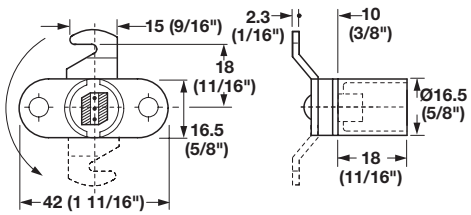

> With outward offset cam; Rotation: 180°
> Material: Cylinder housing: Zinc die-cast, unfinished
Lever: Steel; Finish: nickel-plated

Version	Timberline No.	Item No.
Horizontal installation drawer	CB-181	235.08.205
Vertical installation door	CB-191	235.08.250

→ Universal Cam Lock Body

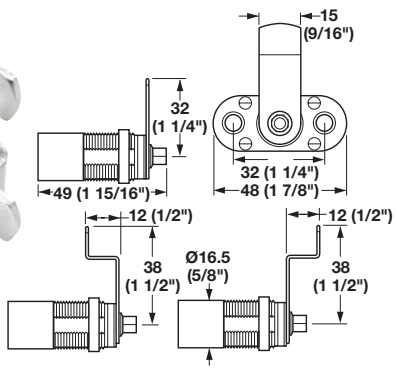

> Adjustable from 22–35 mm (7/8"–1 3/8") by turning the mounting flange
> Barrel conveniently marked with lines to facilitate setting depth
> Rotation: 90°
> Material: Zinc, unfinished; Cams: Steel; Finish: nickel-plated

	Timberline No.	Item No.
	CB-170	235.09.000

Dimensional data not binding. Dimensions in mm, inches are approximate. We reserve the right to alter specifications without notice.

Timberline Modular Removable Core Locking System

> Small high quality appearance
> Fully cushioned to avoid glass damage:
Neoprene gasket on front surface; Plastic washer on back surface
> Unique retainer nut allows secure tightening by hand
> Two piece design for quick mounting
> Finish cap provides improved appearance

→ Glass Door Lock for horizontal installation

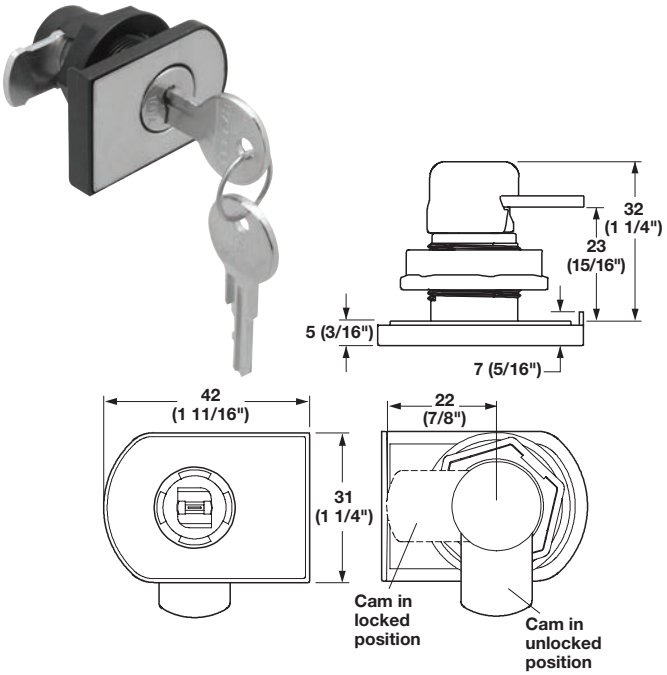

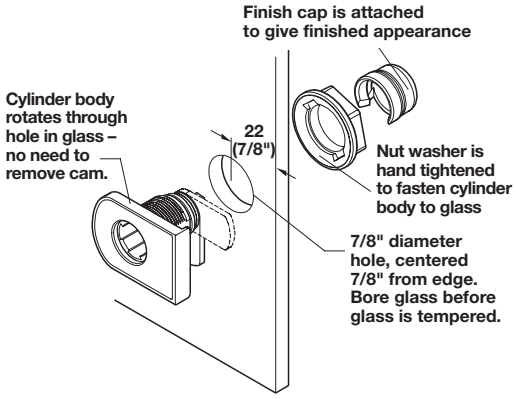

> For glass thickness: up to 10 mm (3/8")
> Cam rotation: 90°
> Material: Outer body: Nylon; Color: black; Face plate: Brass-plated
Finish cap: Plastic; Color: black; Lever: Steel
Finish: nickel-plated

Finish	Timberline No.	Item No.
nickel matt	CB-307	233.17.630
nickel polished	CB-301	233.17.730

→ Glass Door Lock for vertical installation

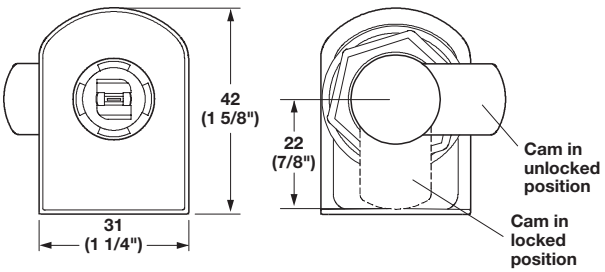

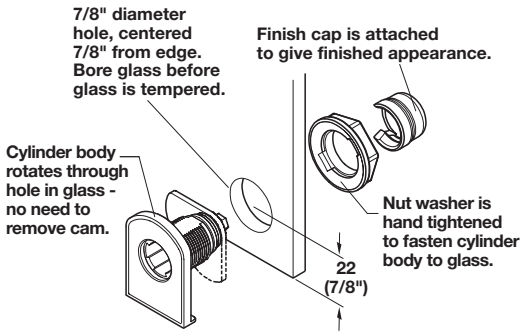

> For glass thickness: up to 10 mm (3/8")
> Cam rotation: 90°
> Material: Outer body: Nylon; Color: black; Face plate: Brass-plated
Finish cap: Plastic; Color: black; Lever: Steel
Finish: nickel-plated

Finish	Timberline No.	Item No.
nickel matt	CB-317	233.17.600
nickel polished	CB-311	233.17.700

Lock cores	page 10.5
Angle strike & strike plate	page 10.20

Dimensional data not binding. Dimensions in mm, inches are approximate. We reserve the right to alter specifications without notice.

Timberline Modular Removable Core Locking System – Timberline

> Non-bore glass door locks
> Small high quality appearance
> Integrated knob to open door
> Fully cushioned to avoid glass damage
  – Neoprene gasket on front surface
  – Plastic tightening screw on back surface

→ Glass Door Lock

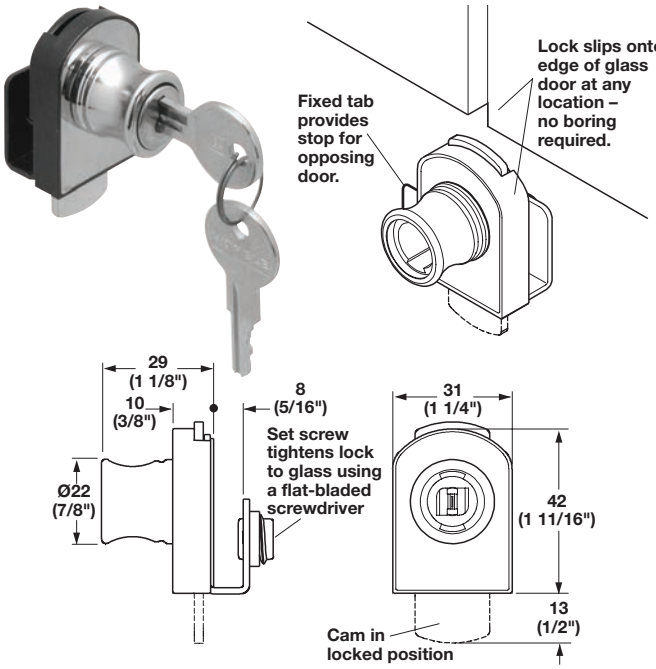

→ For Vertical Installation

> For glass thickness: up to 8 mm (5/16")
> Material: Outer body: Nylon; Color: black; Lever: Steel, nickel-plated

Finish	Timberline No.	Item No.
nickel matt	CB-367	233.18.630
nickel polished	CB-361	233.18.730

→ For Horizontal Installation

> For glass thickness: up to 8 mm (5/16")
> Material: Outer body: Nylon; Color: black; Lever: Steel, nickel-plated

Finish	Timberline No.	Item No.
nickel matt	CB-357	233.18.600
nickel polished	CB-351	233.18.700

→ Glass Door Lock for Double Door

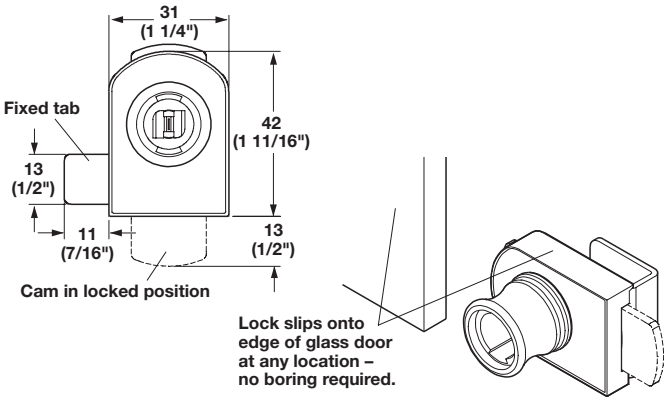

> For glass thickness: up to 8 mm (5/16")
> Material: Outer body: Nylon; Color: black; Lever: Steel, nickel-plated

Finish	Timberline No.	Item No.
nickel matt	CB-377	233.18.660
nickel polished	CB-371	233.18.760

Lock cores	page 10.5
Angle strike & strike plate	page 10.20

→ Push button Lock

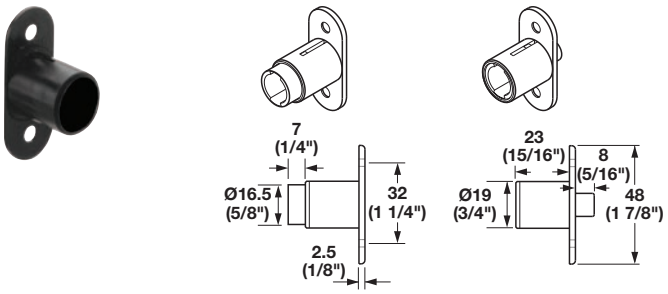

> Locks sliding doors
> Compatible with all cores
> Small 19 mm (3/4") diameter for improved appearance
> Throw: 8 mm (5/16")
> Material: Lock case: Nylon; Cylinder housing: Zinc die-cast

Color	Timberline No.	Item No.
black	CB-175	234.65.000

Dimensional data not binding. Dimensions in mm, inches are approximate. We reserve the right to alter specifications without notice.

Timberline Modular Removable Core Locking System

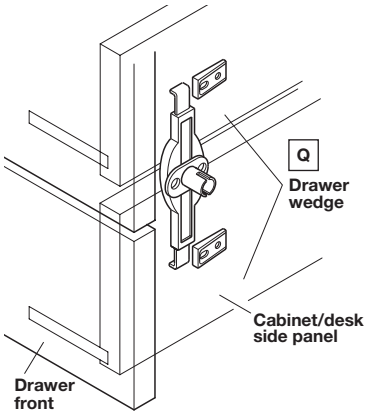

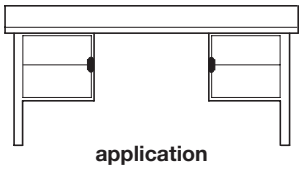

> The most economical arrangement for locking 2 drawers simultaneously
> Only a single hole needs to be drilled in the drawer or side panel, then the lock installs vertically
> A drawer locking wedge is attached to each side panel
> Install the cylinder core and the lock is ready for use

→ Central Locking System for 2 drawers

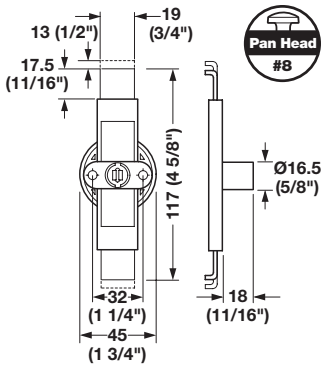

> For two drawers with lockbar
> Throw: 13 mm (1/2")
> Fits within 13 mm (1/2") drawer slide clearance
> Material: Lock case: Nylon; Color: black
Cylinder housing: Zinc die-cast, unfinished
Bars: Steel; Finish: nickel-plated

	Timberline No.	Item No.
	CB-270	234.92.300

	Lock cores	page 10.5
	Cylinder rosettes	page 10.6
Q	Drawer wedges	page 10.18
	Strike plates	page 10.20
	Pan head screws	pages 12.9–12.10

Dimensional data not binding. Dimensions in mm, inches are approximate. We reserve the right to alter specifications without notice.

Timberline Modular Removable Core Locking System

Typical applications

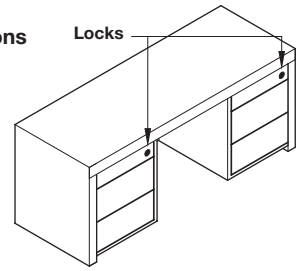

Desk with lock
Mounted in fixed rail (1" min.)

Modular pedestal with lock
Mounted in drawer front

Drilling & routing diagram

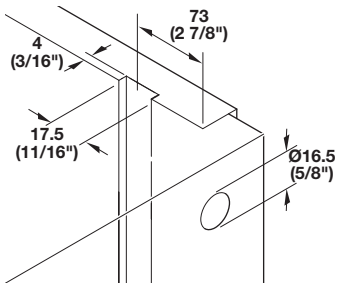

> The choice for fully engineered cabinets
> Allows for simplified mounting and quick adjustment making installation easy
> Adjustment to bar moves fixed pin positions
> Can be installed on the right side of the cabinet only

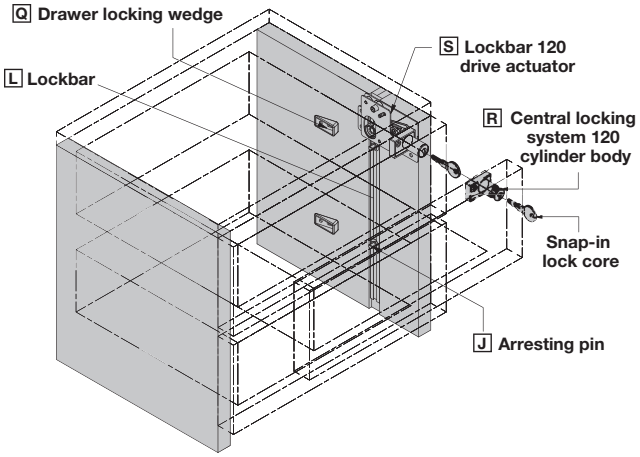

→ R Central Locking System Body

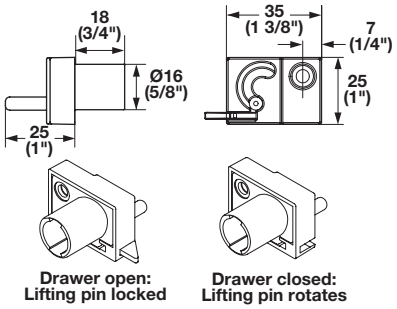

> With small lifting pin
> Rotation: 180°
> Lift: 12 mm (1/2")
> Small pin design will not interfere with drawer contents
> Assure-Sync feature prevents rotation of lock when drawer is open, ensuring proper pin alignment when drawer is closed
  - When drawer is open spring release is enabled, preventing rotation of the cylinder core and locking the lifting pin in place
  - When drawer is closed spring release is disabled, allowing rotation of the cylinder core and lifting pin
> Material: Lock case: Nylon; Color: black
  Cylinder housing: Zinc die-cast, unfinished

	Timberline No.	Item No.
	CB-120	237.67.300

→ S Drive Actuator

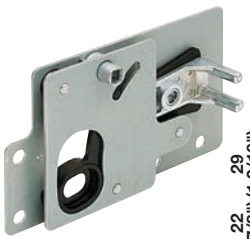

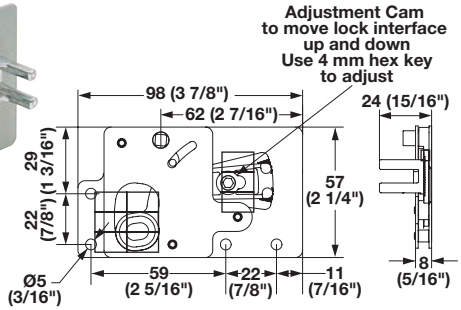

> Transmits horizontal rotation of drive shaft to vertical movement of lockbar
> Easy to position on side panel
> Lockbar is held in position when drawer is opened
> Unique adjustment cam design allows for easy movement of lock interface for accurate pin alignment; use a 4 mm (5/32") hex key to adjust
> Material: Steel; Cam: Zinc die-cast, unfinished
  Linkage arm: Plastic; Color: black

	Timberline No.	Item No.
	AC-120	237.67.310

	Lock cores	page 10.5
L	Lockbar	page 10.18
J	Arresting pins	page 10.18
Q	Drawer wedges	page 10.18
	Miscellaneous strikes	page 10.20

Dimensional data not binding. Dimensions in mm, inches are approximate. We reserve the right to alter specifications without notice.

Timberline Modular Removable Core Locking System – Central Locking System

→ T Remote Actuator

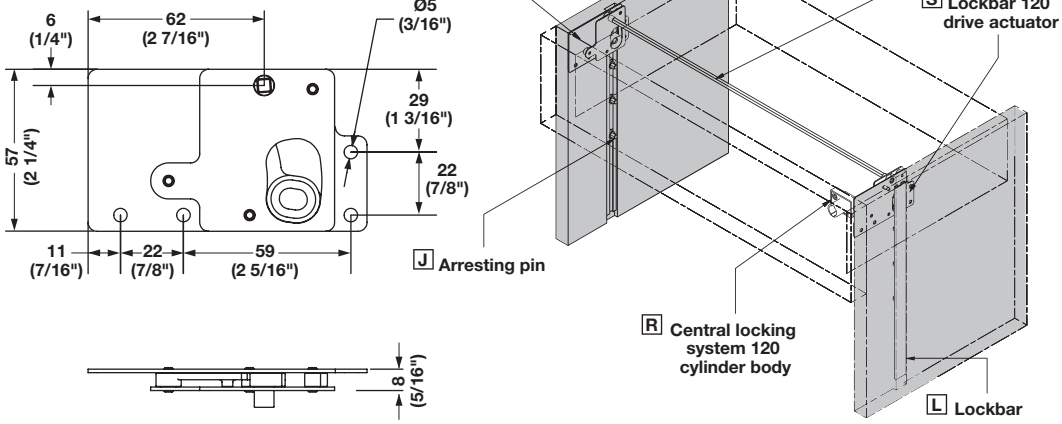

> Must be used with drive actuator, see page **10.13**
> Transmits horizontal rotation of drive shaft to vertical movement of lockbar on opposite side of cabinet
> Material: Steel; Finish: zinc; Linkage arm: Plastic; Color: black

	Timberline No.	Item No.
	AC-125	237.67.320

→ U Drive Shaft

> Fabricate any size shaft up to 914 mm (36") by cutting to desired length
> Material: Steel

Finish	Timberline No.	Item No.
zinc-plated	SS-360	237.67.900

	Lock cores	page 10.5
L	Lockbar	page 10.18
J	Arresting pins	page 10.18
R	Cylinder body	page 10.13

Dimensional data not binding. Dimensions in mm, inches are approximate. We reserve the right to alter specifications without notice.

Timberline Modular Removable Core Locking System

Typical applications

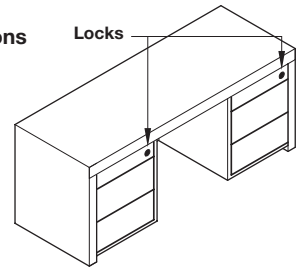

Desk with lock
Mounted in fixed rail (1" min.)

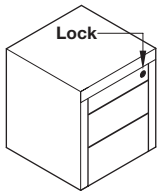

Modular pedestal with lock
Mounted in drawer front

> Minimizes interference with hanging files
> Permits locking from the front in a fixed position in a lock strip or drawer front
> Installs left or right

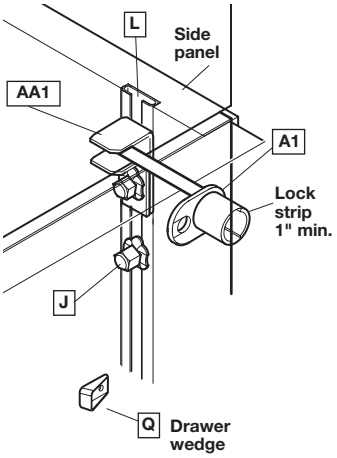

Drilling & routing diagram

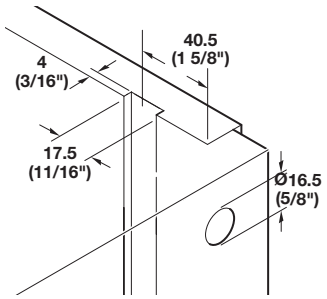

→ A1 Half Lock Body with lifting pin

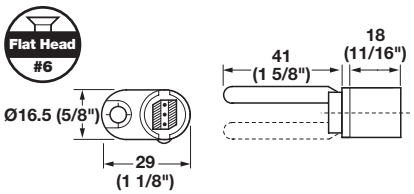

> Rotation: 180°
> Lift: 12 mm (1/2")
> Material: Zinc die-cast, unfinished

	Timberline No.	Item No.
	CB-101	234.85.109

→ AA1 Lockbar Clip

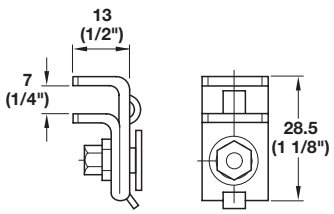

> To fit lock body A1
> Mounts at any location along lockbar L
> Material: Steel

Finish	Timberline No.	Item No.
zinc-plated	LC-106	234.87.961

	Lock cores	page 10.5
L	Lockbar	page 10.18
J	Arresting pins	page 10.18
Q	Drawer wedges	page 10.18
	Insertion tool	page 10.18
	Miscellaneous strikes	page 10.20
	Flat head screws	pages 12.7–12.8, 12.10, 12.13

Dimensional data not binding. Dimensions in mm, inches are approximate. We reserve the right to alter specifications without notice.

Timberline Modular Removable Core Locking System

Typical applications

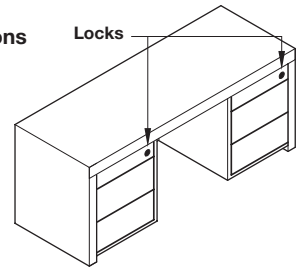

Desk with lock
Mounted in fixed rail (1" min.)

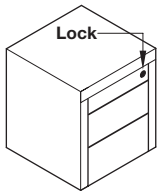

Modular pedestal with lock
Mounted in drawer front

> Permits locking from the front either in a fixed position in a lock strip or in a drawer front, in which case it travels with the drawer
> Can be installed on the left or right side of the cabinet as preferred

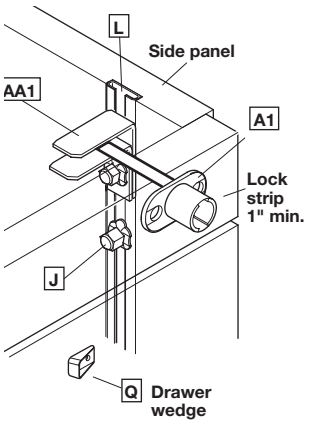

Drilling & routing diagram

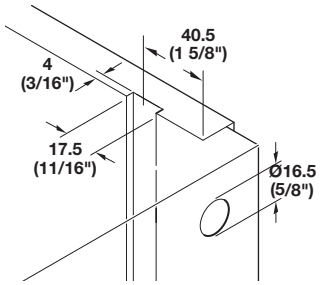

→ A1 Lock Body with Lifting Pin

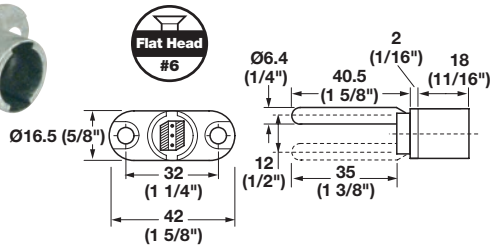

> Rotation: 180°
> Lift: 12 mm (1/2")
> Material: Zinc die-cast, unfinished

	Timberline No.	Item No.
	CB-100	234.85.001

→ AA1 Lockbar Clip

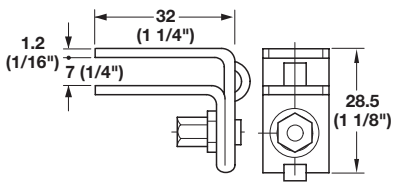

> To fit lock body A1
> Mounts at any location along lockbar L
> Material: Steel

Finish	Timberline No.	Item No.
zinc-plated	LC-100	234.87.998

	Lock cores	page 10.5
L	Lockbar	page 10.18
J	Arresting pins	page 10.18
Q	Drawer wedges	page 10.18
	Insertion tool	page 10.18
	Miscellaneous strikes	page 10.20
	Flat head screws	pages 12.7–12.8, 12.10, 12.13

Dimensional data not binding. Dimensions in mm, inches are approximate. We reserve the right to alter specifications without notice.

Timberline Modular Removable Core Locking System

Typical applications

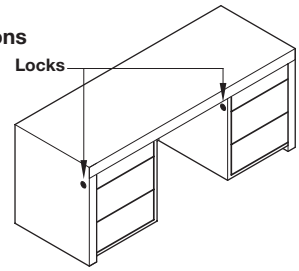

Desk with lock
Mounted in fixed rail (1" min.)

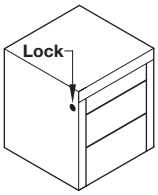

Modular pedestal with lock
Mounted in side panel

Drilling & routing diagram

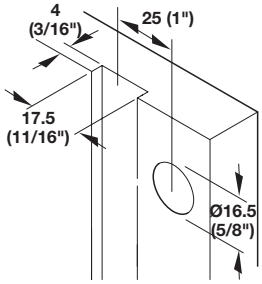

> An economical arrangement which allows installation of the lock body in the side panel at any position
> Installs left or right

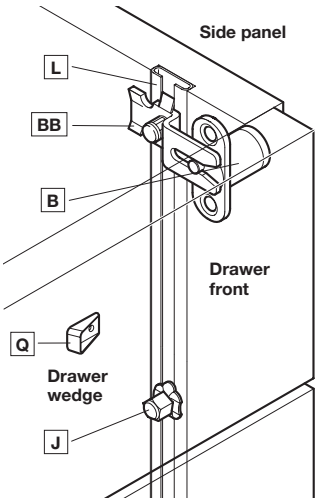

→ Wardrobe/Overhead Storage Lock

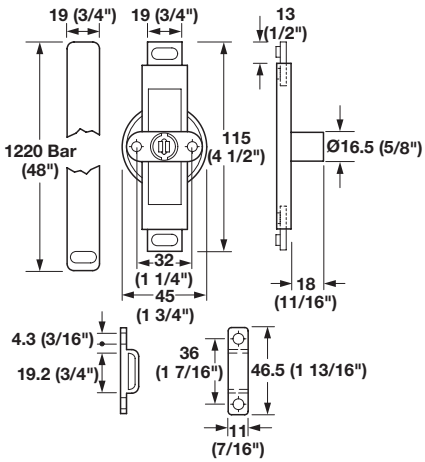

> Throw: 13 mm (1/2")
> Material: Lock case: Plastic; Color: black
Cylinder housing: Zinc die-cast, unfinished
Bars: Steel, powder-coated; Color: black
Bar retainers: Nylon; Color: black

Installation	Timberline No.	Item No.
Horizontal	CB-265	223.63.300
Vertical	CB-260	223.63.355

Supplied With
Lock body, 2 Bars, 6 Bar retainers

	Lock cores	page 10.5
L	Lockbar	page 10.18
J	Arresting pins	page 10.18
Q	Drawer wedges	page 10.18
	Insertion tool	page 10.18
	Miscellaneous strikes	page 10.20
	Flat head screws	pages 12.7–12.8, 12.10, 12.13

→ B Side Mount Lock Body

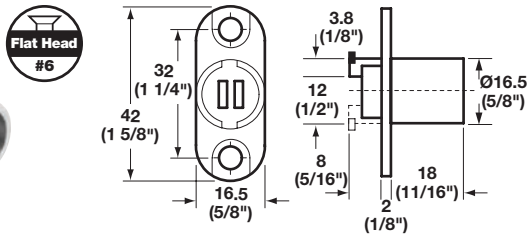

> With locking lug
> Rotation: 180°
> Lift: 12 mm (1/2")
> Material: Zinc die-cast, unfinished

	Timberline No.	Item No.
	CB-150	234.86.017

→ BB Lockbar Clip

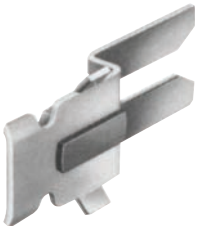

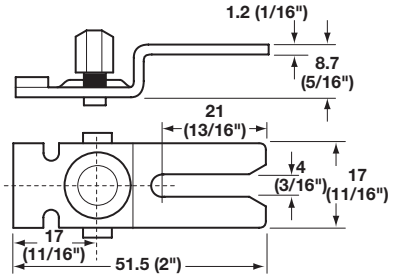

> To fit lockbar clip to lockbar L
> Material: Steel

Finish	Timberline No.	Item No.
zinc	LC-150	234.86.900

Dimensional data not binding. Dimensions in mm, inches are approximate. We reserve the right to alter specifications without notice.

Timberline Modular Removable Core Locking System

→ J Arresting Pins

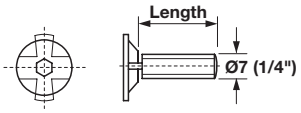

> Hexagonal section, for installation in lockbar L, using hex insertion tool, at any desired position
> Material: Steel; Finish: nickel-plated

Length	Timberline No.	Item No.
9.5 (3/8")	AP-037	237.22.714
13 (1/2")	AP-050	237.22.723
16 (5/8")	AP-062	237.22.732
19 (3/4")	AP-075	237.22.741
22 (7/8")	AP-087	237.22.750
25 (1")	AP-100	237.22.769
32 (1 1/4")	AP-125	237.22.778
51 (2")	AP-300	237.22.796

→ K Bar Retaining Bracket

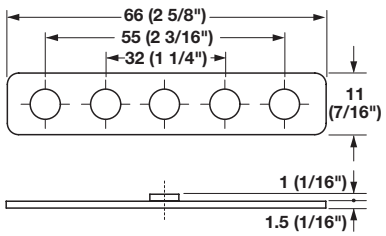

> With guide lug
> Material: Steel

Finish	Timberline No.	Item No.
zinc-plated	LR-100	234.87.989

→ Hex Insertion Tool

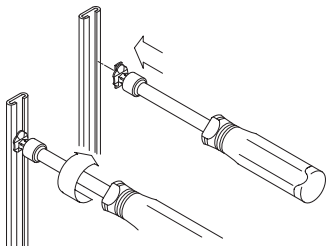

> 6 mm (1/4")
> To install arresting pins J in lockbar L
> Material: Hardened Steel; Finish: nickel-plated
Handle: Plastic; Color: green/black

	Item No.
	008.26.120

→ L Lockbar

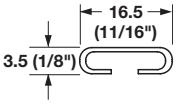

> For use with any central locking assembly from the cylinder module system
> Lockbar groove (W x D): 18 x 4 mm (11/16" x 5/32")
> Material: Steel; Finish: zinc-plated

Length	Timberline No.	Item No.
457 (18")	LB-120	234.87.818
609 (24")	LB-240	234.87.827
915 (36")	LB-360	234.87.836
1220 (48")	LB-480	234.87.845

→ Q Drawer Locking Wedges

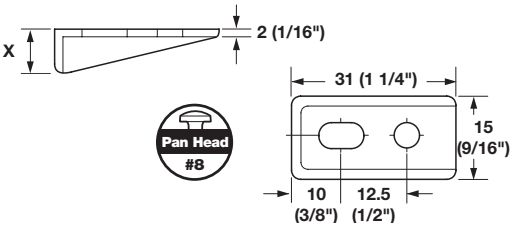

> Different wedge heights allow for a standard 9.5 mm (3/8") arresting pin to be used with thicker drawer slides
> Material: Plastic; Color: black

X	Slide thickness	Timberline No.	Item No.
11 (7/16")	12 (1/2")	DC-500	234.91.090
17 (11/16")	19 (3/4")	DC-502	234.91.092
20 (13/16")	22 (7/8")	DC-510	234.91.094

→ Drill Bit

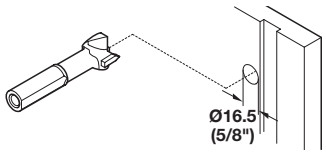

> Ø: 16.5 mm (5/8")
> Suitable for any cylinder housing in the system
> Can also be used in multi-spindle drilling machines with 10 mm (3/8") chuck
> Material: Shank: Steel; Bit: Carbide-tipped

	Item No.
	001.24.194

Pan head screws pages 12.9–12.10

Dimensional data not binding. Dimensions in mm, inches are approximate. We reserve the right to alter specifications without notice.

Timberline Modular Removable Core Locking System

> Secures cabinet drawers mounted on undermount slides
> For use with any central locking assembly from the cylinder module system
> Fits within side clearances of 8–10 mm (5/16"–3/8")
> Does not require spacers or extra matching

→ Lockbar Clip

> Material: Steel, galvanized

Item No.
234.91.089

→ Drawer Locking Wedge

> Material: Plastic

Color	Item No.
black	234.91.080

Dimensional data not binding. Dimensions in mm, inches are approximate. We reserve the right to alter specifications without notice.

Timberline Modular Removable Core Locking System

→ Angle Strike

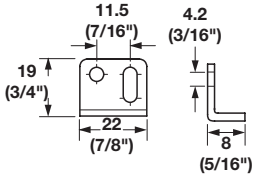

> 90° angle
> Screw mounted
> Material: Steel

Finish	Timberline No.	Item No.
black	SP-100-3	239.61.319
nickel-plated	SP-100-1	239.61.710

→ Strike Plate

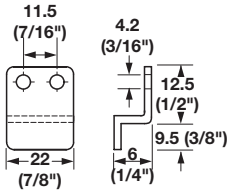

> Screw mounted
> Material: Steel

Finish	Timberline No.	Item No.
black	SP-255-3	239.61.328
nickel-plated	SP-255-1	239.61.720

→ Strike Plate

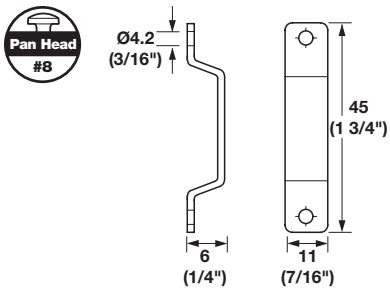

> Belt loop type
> Screw mounted
> Material: Steel

Finish	Timberline No.	Item No.
black	SP-250-3	239.61.337
nickel-plated	SP-250-1	239.61.730

→ Angle Strike

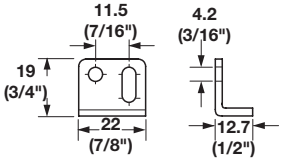

> For behind door
> Material: Steel

Finish	Timberline No.	Item No.
black	SP-101-3	239.61.311
nickel-plated	SP-101-1	239.61.711

→ Strike Plate

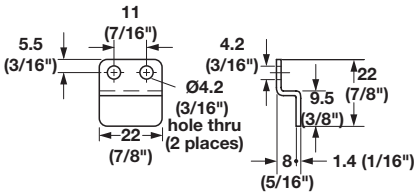

> For behind door
> Material: Steel

Finish	Timberline No.	Item No.
black	SP-257-3	239.61.350
nickel-plated	SP-257-1	239.61.750

→ Strike Plate

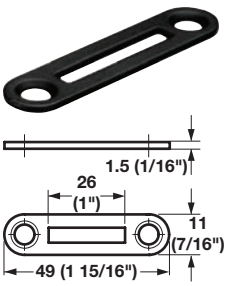

> For dead bolt lock cylinders
> Material: Steel

Finish	Timberline No.	Item No.
black	SP-185-3	239.08.303
nickel-plated	SP-185-1	239.08.704

→ Strike Plate

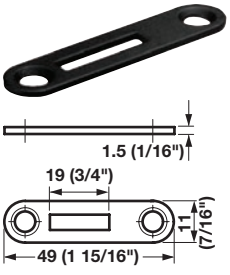

> With offset slot, for hook lever lock cylinder
> Material: Steel

Finish	Timberline No.	Item No.
black	SP-181-3	239.08.320
nickel-plated	SP-181-1	239.08.724

Pan head screws pages 12.9–12.10

Dimensional data not binding. Dimensions in mm, inches are approximate. We reserve the right to alter specifications without notice.

Anti-Tip System

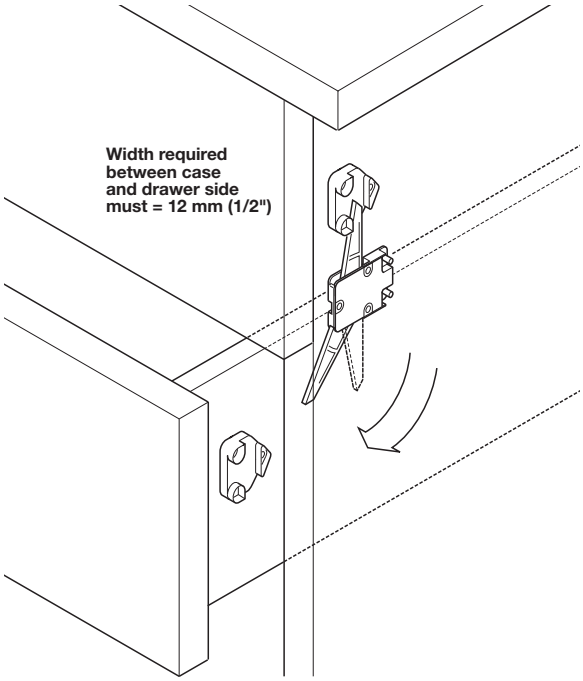

→ Components required: For 2 drawer applications

> 1 anti-tip snapper
> 2 drawer clips

→ Components required: For 3 drawer applications

> Simply "lock" one of the arms on anti-tip snapper to cabinet side panel using a screw through hole in arm

→ Components required: For 4 drawer applications

> 2 anti-tip snappers
> 4 drawer clips
> 2 linkage arms
> Lockbar and 2 arresting pins

→ Recommended Position

> Left hand side of case
> 75–126 mm (3"–5") from front of case

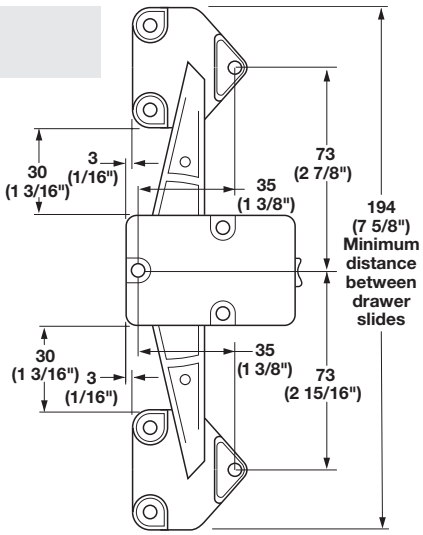

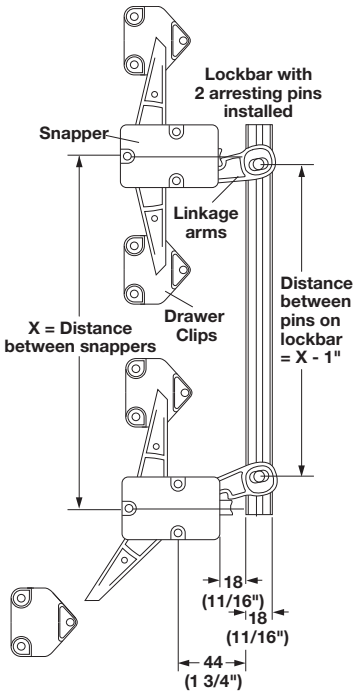

Dimensional data not binding. Dimensions in mm, inches are approximate. We reserve the right to alter specifications without notice.

Anti-Tip System

> Meets or exceeds ANSI/BFIMA requirements
> Only one drawer can be opened at a time

→ Anti-Tip Snapper

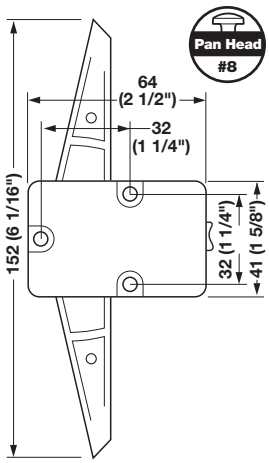

> Mounts to side of cabinet
> Material: Zinc die-cast, unfinished

Finish	Timberline No.	Item No.
black	SN-400	237.43.310

Note
1 required for 2 drawers.

→ Drawer Clips, standard

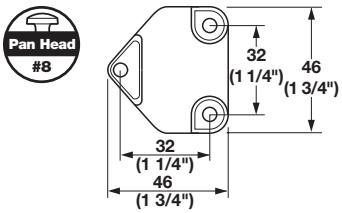

> Mounts to side of drawers
> Material: Plastic

Finish	Timberline No.	Item No.
black	DC-400	237.43.320

Note
2 required per snapper.

→ Drawer Clips, narrow

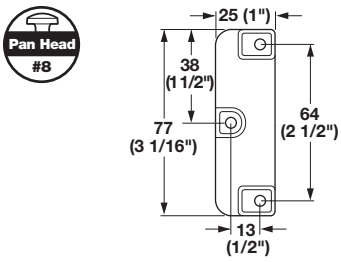

> Mounts to side of drawers
> For use when there is less space between drawer slides
> Material: Plastic

Finish	Timberline No.	Item No.
black	DC-410	237.43.322

Note
2 required per snapper.

→ Linkage Arm

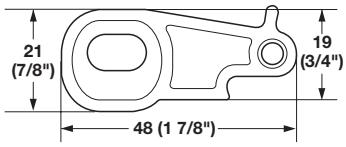

> Material: Plastic

Color	Timberline No.	Item No.
black	SN-410	237.43.330

Note
2 pcs. required for 4 drawers.

Pan head screws pages 12.9–12.10

Dimensional data not binding. Dimensions in mm, inches are approximate. We reserve the right to alter specifications without notice.

SYMO 3000 Modular Removable Core Locking System

→ Removable core cylinders mounted without tools

> Tools are not required for inserting and removing the cylinder cores, which can also be done at any time after the locks have been installed
> The cylinder core can only be inserted or taken out when the lock is in an unlocked position
> Do not treat the cylinder cores with graphite

→ Identical drilling dimensions for all lock versions

> The uniform cylinder housing diameter of 18 mm (11/16") (19 mm (3/4") including rosette) allows a uniform drilling size for all locks within the locking system.

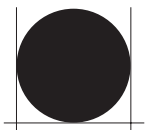

18 mm (11/16") without rosette

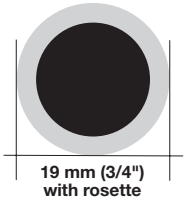

19 mm (3/4") with rosette

→ One protective cap, several functions

> The protective caps of the SYMO 3000 locks shield the interior of the cylinder housing from dirt or damage during construction phase
> Due to their design, they also function as building site keys and allow lock operation with a coin or screwdriver
> After construction is completed, the protective caps can be removed easily without tools and replaced by the desired cylinder cores.

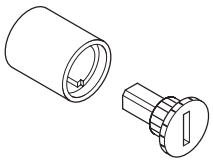

Mounting plate cylinder removable cores

→ Inserting the cylinder core

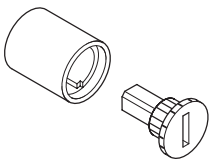

Remove the protective cap from the cylinder housing.

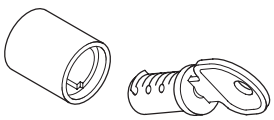

Push the cylinder core with the inserted key into the cylinder housing.

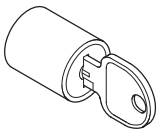

Engage the cylinder core with slight pressure.

→ Removing the cylinder core

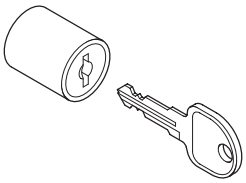

Insert the removal key into the cylinder core.

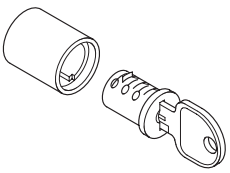

Take the cylinder core out of the cylinder housing using the removal key.

Mounting pin-tumbler cylinder removable cores

→ Inserting the cylinder core

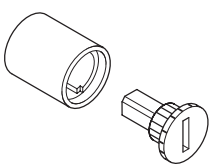

Remove the protective cap from the cylinder housing.

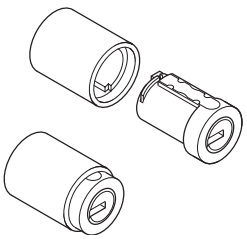

Insert the cylinder core into the cylinder housing and engage it with slight pressure.

→ Removing the cylinder core

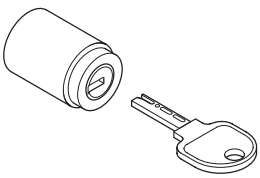

Insert the removal key into the cylinder core.

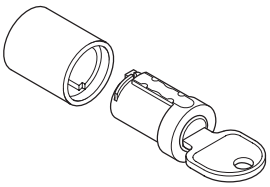

Take the cylinder core out of the cylinder housing using the removal key and applying slight counterpressure.

Dimensional data not binding. Dimensions in mm, inches are approximate. We reserve the right to alter specifications without notice.

SYMO 3000 Modular Removable Core Locking System

> For all lock bodies within the SYMO 3000 system
> Locking direction: left and right

→ Plate-Cylinder Removable Core - keyed different

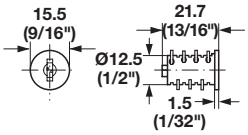

> Locking system: with 6 plate levers
> Key changes: 2,600 different key changes are possible
> Key type: cut key
> Material: Housing: Zinc Alloy; Lever plate: Brass

Finish	Item No.
nickel-plated	210.40.600

Supplied With
2 Keys

Note
Master key not available for keyed different.

→ Plate-Cylinder Removable Core - keyed alike

> Locking system: with 6 plate levers
> Key changes: 2,600 different key changes are possible
> Key type: cut key
> Material: Housing: Zinc Alloy; Lever plate: Brass

Key Change	Item No.
SH 1	210.40.601
SH 2	210.40.602
SH 3	210.40.603
SH 4	210.40.604
SH 5	210.40.605
SH 6	210.40.606
SH 7	210.40.607
SH 8	210.40.608
SH 9	210.40.609
SH 10	210.40.610

Supplied With
2 Keys

→ Master Key for Keyed Alike

> For plate-cylinders/cut key
> For key changes: SH 0001-0200
> Material: Steel

Finish	Item No.
nickel-plated	210.11.001

→ Key Blank

> For plate-cylinders/cut key
> For duplicate keys or additional keys
> Not suitable for removal keys or master keys
> Material: Steel

Finish	Item No.
nickel-plated	210.11.080

→ Removal Key

> For plate-cylinders/cut key
> Material: Steel

Finish	Item No.
nickel-plated	210.11.090

Dimensional data not binding. Dimensions in mm, inches are approximate. We reserve the right to alter specifications without notice.

SYMO 3000 Modular Removable Core Locking System

→ STW Pin-Tumbler Cylinder Removable Core

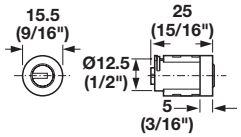

> Locking system: with 6 pairs of pins
> Key changes: 10,000 different key changes are possible
> Key type: dimple key
> Material: Zinc Alloy

Finish	Item No.
nickel-plated	210.45.600

Supplied With
1 Key

Note
Master keying and General Master key systems available upon request. Verify production time.

→ STW Pin-Tumbler Cylinder Removable Core keyed alike

Key Change	Item No.
001 A	210.45.601
002 A	210.45.602
003 A	210.45.603
004 A	210.45.604
005 A	210.45.605

Supplied With
1 Key

→ Removal Key

> For pin-tumbler cylinders/dimple key
> Material: Steel

Finish	Item No.
nickel-plated	210.45.090

→ Cylinder Rosette

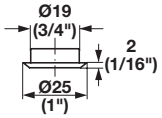

> 19 mm (3/4") hole required
> Press-fit
> Material: Steel

Finish	Item No.
nickel-plated matt	219.19.676

→ Special Drill Bit

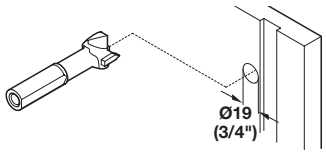

> Ø18 mm (11/16") is suitable for any cylinder housing in the SYMO system
> Ø19 mm (3/4") is suitable for rosette application
> Material: Shank: Steel; Bit: Carbide-tipped

Diameter	Item No.
18 (11/16")	001.06.365
19 (3/4")	001.08.014

Dimensional data not binding. Dimensions in mm, inches are approximate. We reserve the right to alter specifications without notice.

SYMO 3000 Modular Removable Core Locking System

→ Deadbolt Rim Lock

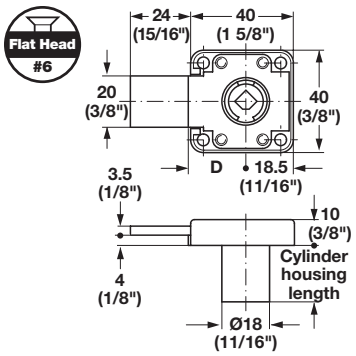

> Long bolt travel
> For cylinder cores that are inserted from the front on-site
> Backset D: 25 mm (1")
> Bolt travel: 24 mm (15/16")
> Screw mounted
> Material: Zinc Alloy; Finish: nickel-plated

Handing	Cylinder housing length	Item No.
Left	22 (7/8")	232.25.610
Right	22 (7/8")	232.25.600
Drawer version	22 (7/8")	232.25.620
Drawer version	32 (1 1/4")	232.25.680

→ Deadbolt Rim Lock

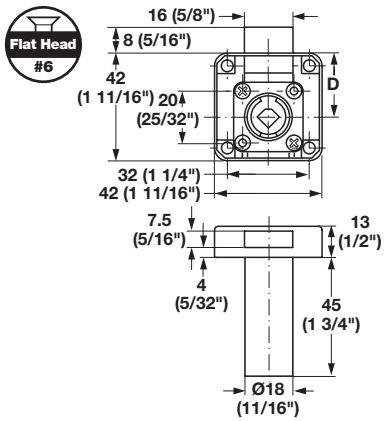

> For cylinder cores that are inserted from the front on-site
> Backset D: 25 mm (1")
> Cylinder housing length: 45 mm (1 3/4")
> Screw mounted
> Material: Zinc Alloy; Finish: nickel-plated

Handing	Item No.
Left	232.26.612
Right	232.26.602
Drawer version	232.26.622

→ Deadbolt Rim Lock

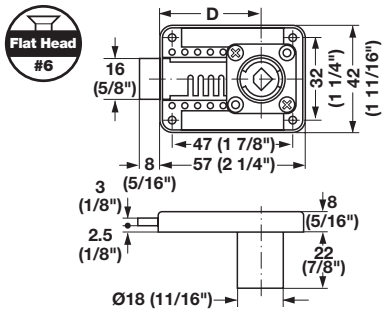

> With adjustable backset
> For cylinder cores that are inserted from the front on-site
> Backset D: 15–40 mm (5/8"–1 9/16") (adjustable in steps of 5 mm (3/16")
> Handing convertible to left or right
> Screw mounted
> Material: Zinc Alloy

Finish	Item No.
nickel-plated	232.26.690

→ Inlaid Lock

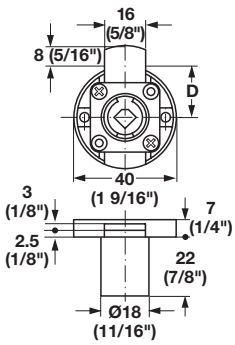

> For cylinder cores that are inserted from the front on-site
> Backset D: 20 mm (25/32")
> Handing: drawer version
> Screw mounted
> Material: Zinc Alloy

Finish	Item No.
nickel-plated	230.28.620

Lock cores	pages 10.24–10.25
Flat head screws	pages 12.7–12.8, 12.10, 12.13

Dimensional data not binding. Dimensions in mm, inches are approximate. We reserve the right to alter specifications without notice.

SYMO 3000 Modular Removable Core Locking System

→ Cam Lock

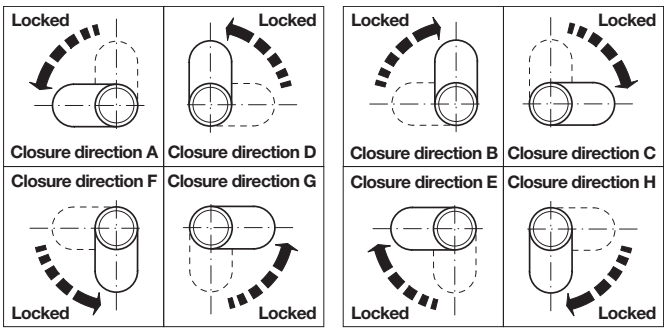

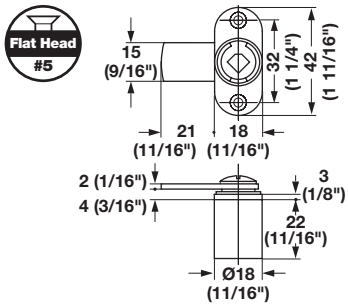

> With screw mounted mounting plate
> For cylinder cores that are inserted from the front on-site
> Straight cam
> For door thickness: max. 22 mm (7/8")
> Material: Zinc Alloy; Finish: nickel-plated

Closure direction	Item No.
A (D, F, G)	235.59.600
B (C, E, H)	235.59.610

Supplied With
Locking cam
Mounting screw
Pre-mounted washer

Lock cores	pages 10.24–10.25
Flat head screws	pages 12.7–12.8, 12.10, 12.13

Dimensional data not binding. Dimensions in mm, inches are approximate. We reserve the right to alter specifications without notice.

SYMO 3000 Modular Removable Core Locking System - Specialty Locks

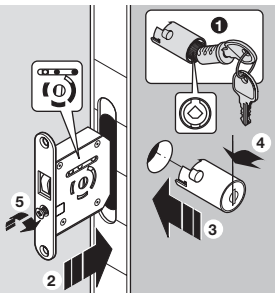

Installation

1. Insert the cylinder core.
2. Insert the lock case into the door.
3. Insert the cylinder housing through the drill hole.
4. Turn the cylinder housing slightly to the left (bayonet catch).
5. Screw in the safety screw.

The cylinder housing is now firmly fixed to the lock case.

→ Lock Handle

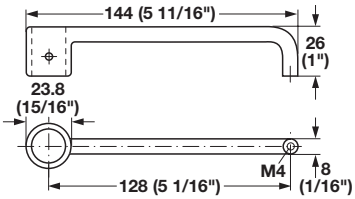

> For SYMO dead bolt rim lock with extended cylinder
> Screw mounted (to cylinder housing with 2 mm (1/16") hex screw
> Handle end to door with M4 screw
> Material: Zinc Alloy

Finish	Item No.
nickel-plated	232.26.699

Supplied With
2 mm hex screw

Note
M4 screw not included.

→ Hook Bolt Mortise Lock

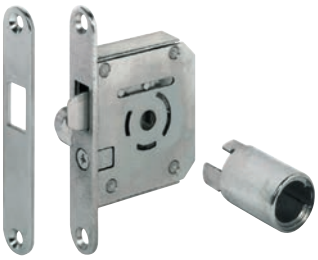

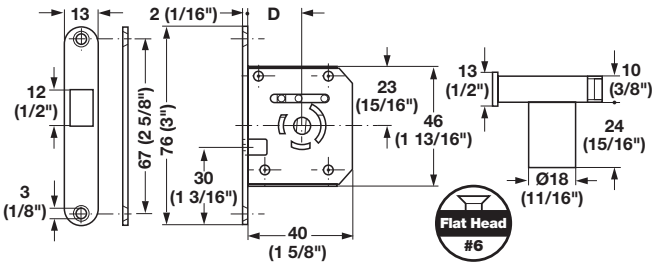

> For cylinder cores that are inserted from the front on-site
> Backset D: 22 mm (7/8")
> Handing: right
> Recess mounted and screw mounted
> Material: Zinc Alloy

Finish	Item No.
nickel-plated	230.36.600

Supplied With
Strike plate

→ Roller Shutter Rim Lock

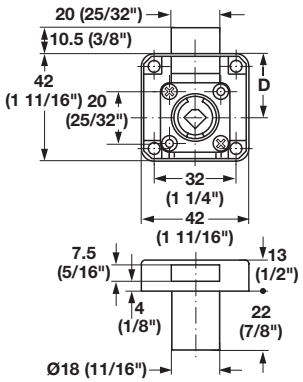

> For cylinder cores that are inserted from the front on-site
> Backset D: 24.5 mm (1")
> Handing: drawer version
> Screw mounted
> Material: Zinc Alloy

Finish	Item No.
nickel-plated	232.30.620

Supplied With
Strike plate

Lock cores	pages 10.24–10.25
Flat head screws	pages 12.7–12.8, 12.10, 12.13

Dimensional data not binding. Dimensions in mm, inches are approximate. We reserve the right to alter specifications without notice.

SYMO 3000 Modular Removable Core Locking System, Gang Locks

→ Central Locking Cylinder, side mount

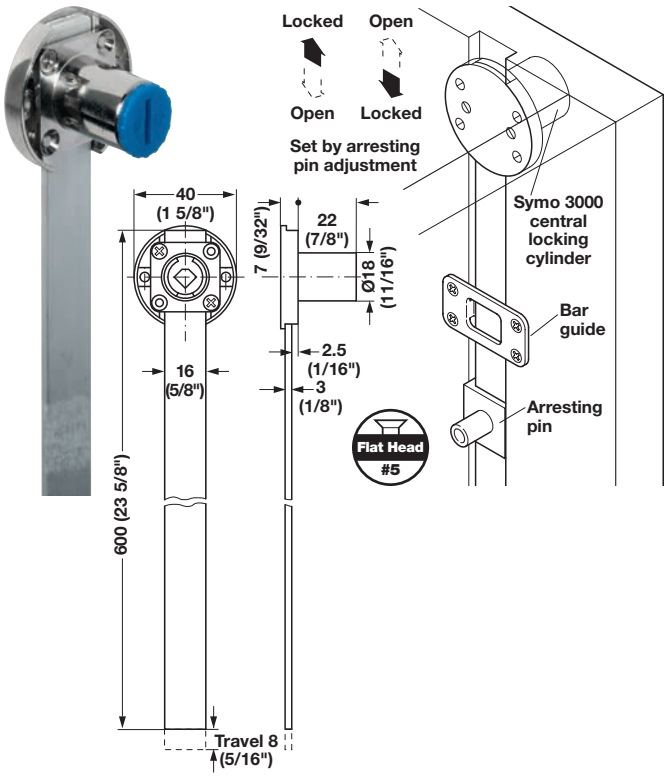

> With bar
> For cylinder cores that are inserted from the front on-site
> Closure direction: 180°
> Bar length: 600 mm (23 5/8")
> Travel: 8 mm (5/16")
> Screw mounted
> Material: Cylinder: Zinc Alloy; Bar: Aluminum

Finish	Item No.
nickel-plated	237.48.600

→ Central Locking Push-Button Cylinder, front mount

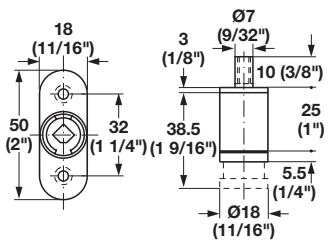

> For cylinder cores that are inserted from the front on-site
> Closure direction: 180°
> With internal M5 thread in locking pin for use with central locking accessories
> Screw mounted
> Material: Zinc Alloy

Finish	Item No.
nickel-plated	234.65.600

→ Locking Sleeve

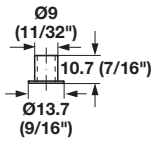

> For SYMO 3000 push-button cylinder
> Accommodates the locking pin
> Mounts in drilled hole
> Material: Brass

Finish	Item No.
nickel-plated	234.59.994

Lock cores	pages 10.24–10.25
Accessories	pages 10.30–10.31
Flat head screws	pages 12.7–12.8, 12.10, 12.13

Dimensional data not binding. Dimensions in mm, inches are approximate. We reserve the right to alter specifications without notice.

SYMO 3000 Modular Removable Core Locking System - Accessories

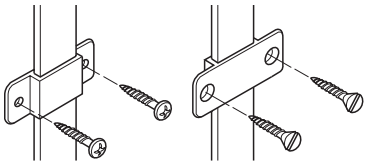

> Guides can be used for surface-mounted (left) or recessed (right) bars by reversing their position

→ Bar Guide

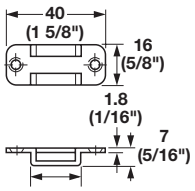

> Open type
> Designed for a bar section measuring 16 × 3 mm (5/8" x 1/8")
> Material: Plastic

Color	Item No.
white	237.23.720

→ Bar Guide

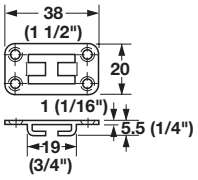

> Open type
> Designed for a bar section measuring 16 × 3 mm (5/8" x 1/8")
> Material: Steel, galvanized

	Item No.
	237.23.006

Dimensional data not binding. Dimensions in mm, inches are approximate. We reserve the right to alter specifications without notice.

SYMO 3000 Modular Removable Core Locking System

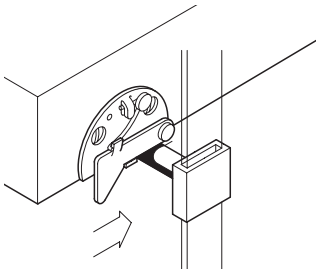

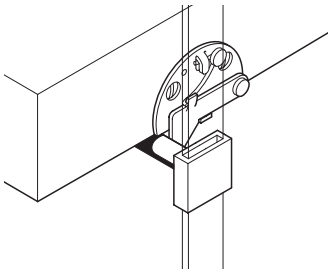

Mounting arrangement for a right hand drawer
> The drawer can be closed even with the pin in the locked position (top)
> The drawer is then locked in position (bottom)

→ Drawer Catches

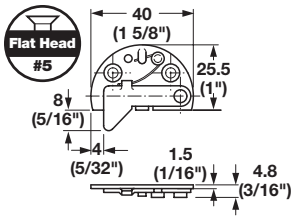

> Screw mounted
> Material: Steel; Finish: zinc-plated

Handing	Item No.
Left	237.16.752
Right	237.16.707

→ Arresting Pin

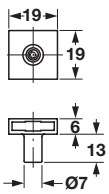

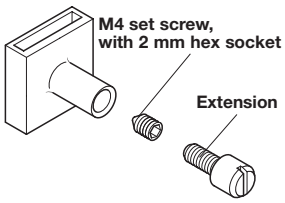

> Material: Zinc Alloy

Finish	Item No.
nickel matt	237.22.100

Supplied With
Slotted set screw

Flat head screws pages 12.7–12.8, 12.10, 12.13

Dimensional data not binding. Dimensions in mm, inches are approximate. We reserve the right to alter specifications without notice.

SYMO 3000 Modular Removable Core Locking System - Glass Door Locks

> For cylinder cores that are inserted from the front on-site

→ Sliding Door Lock

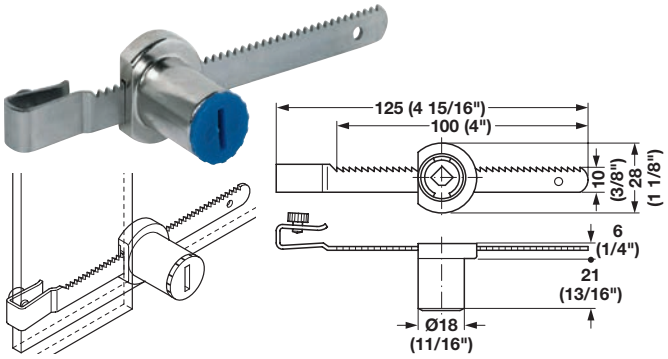

> For glass door thickness 4–7 mm (5/32"–9/32")
> Rack to clip on, cylinder slides onto rack
> Material: Housing: Zinc Alloy; Rack: Stainless Steel

Finish	Item No.
nickel-plated matt	233.44.600

→ Cam Lock

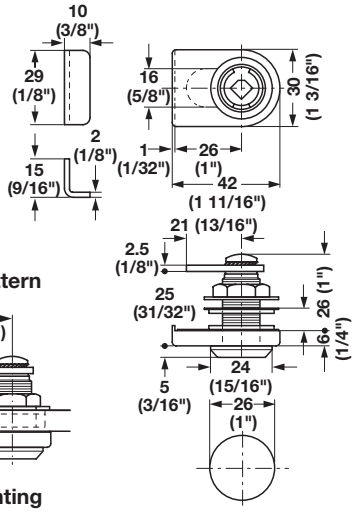

Installation **Drilling pattern**

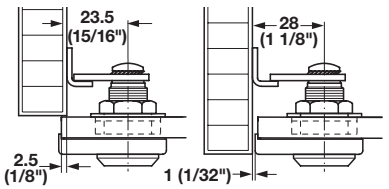

Overlay mounting **Inset mounting**

> For glass door thickness: 4–10 mm (5/32"–13/32")
> Cam: straight
> Closure direction: 180° (convertible)
> Screw mounted with hexagon nut
> Material: Zinc Alloy

Finish	Handing	Item No.
nickel-plated polished	left	233.42.600
	right	233.42.610
nickel-plated matt	left	233.42.700
	right	233.42.710

Supplied With
Locking cam, Mounting nut, Angled striking plate, Clamping plate, Clamping rosette

→ Counterpiece

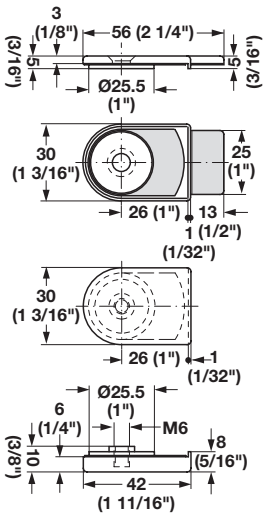

> For SYMO 3000 glass door cam lock for double doors
> For glass thicknesses: 4–10 mm (5/32"–13/32")
> Material: Zinc Alloy

Finish	Item No.
nickel-plated polished	233.40.712

Supplied With
2 Clamping plates, Clamping piece
Threaded screws:
M6 × 10 mm (3/8") (for glass up to 8 mm (5/16") thick)
M6 × 12 mm (1/2") (for glass up to 8–10 mm (5/16"–3/8") thick)

Drilling pattern

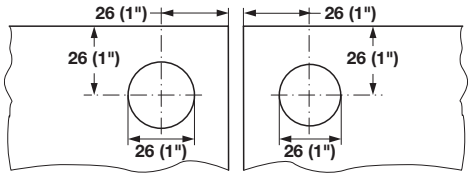

Installation

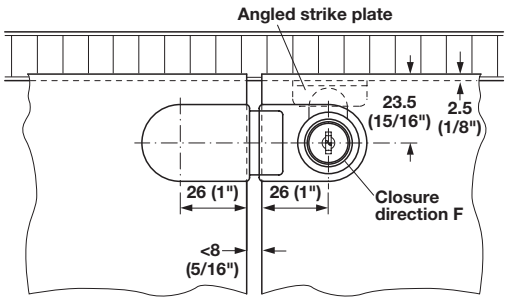

Application
Where glass double doors are used together with the counterpiece, the following closure directions of the glass door cam lock are required:

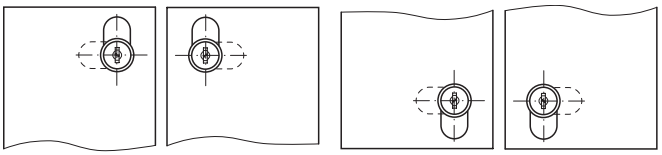

Top left: closure direction E **Top right: closure direction F** **Bottom left: closure direction G** **Bottom right: closure direction H**

Lock cores pages 10.24–10.25

Dimensional data not binding. Dimensions in mm, inches are approximate. We reserve the right to alter specifications without notice.

SYMO 3000 Modular Removable Core Locking System

> For cylinder cores that are inserted from the front on-site
> Screw mounted

→ Sliding Door Lock

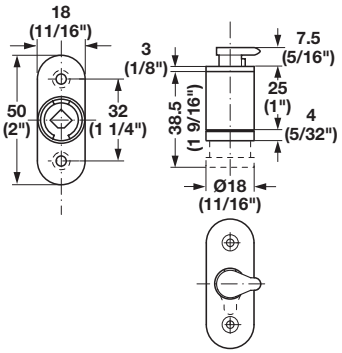

Installation

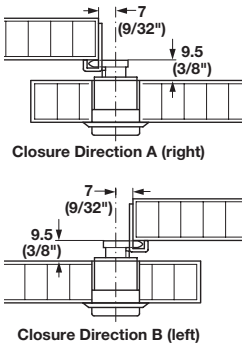

> The rotary bolt further protects sliding doors against being pushed in
> The lock can only be locked and unlocked with the key
> Closure direction: 180°
> Material: Zinc Alloy; Finish: nickel-plated

Locking	Item No.
Closure direction A (right)	234.67.610
Closure direction B (left)	234.67.660

→ PICCOLA-NOVA Espagnolette Locks

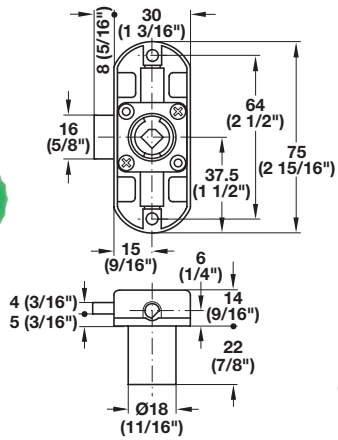

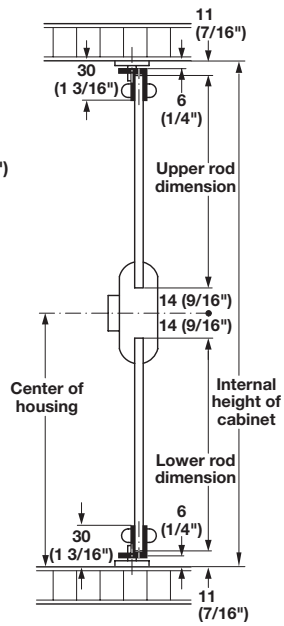

> For divided profile rod 6 mm (1/4")
> Material: Zinc Alloy; Finish: nickel-plated

Handing	Item No.
Left	224.64.650
Right	224.64.600

Note
Please consider the following measurements when designing the cabinet and when choosing the accessories for the espagnolette lock:
Upper rod dimension: center of housing – 25 mm (1")
Lower rod dimension: center of housing – 25 mm (1")

→ Angled Striking Plate

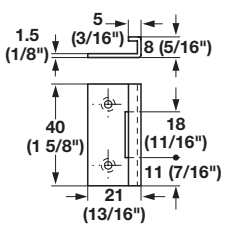

> For SYMO 3000 push and turn lock
> Material: Steel

Finish	Item No.
zinc-plated	239.01.910

Lock cores	pages 10.24–10.25
Rod guides, locking bolt, top and bottom catch hooks	page 10.35
Profile rod	page 10.35
Accessories	page 10.31

Dimensional data not binding. Dimensions in mm, inches are approximate. We reserve the right to alter specifications without notice.

Espagnolette Locking Systems

> A three point locking system designed for tall wardrobe type cabinets
> Keeps top and bottom of doors secure and aligned
> Can be used on doors up to 2000 mm (78") in height

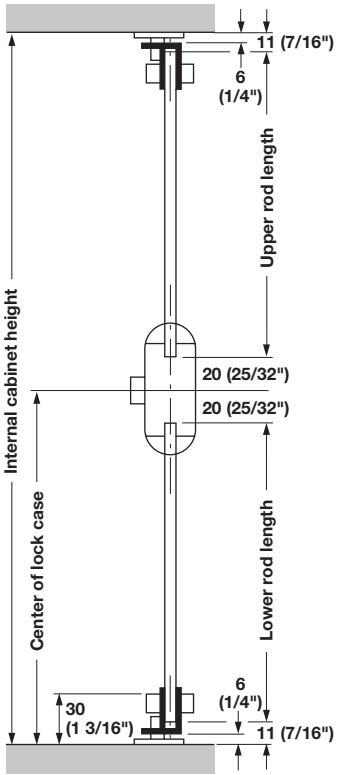

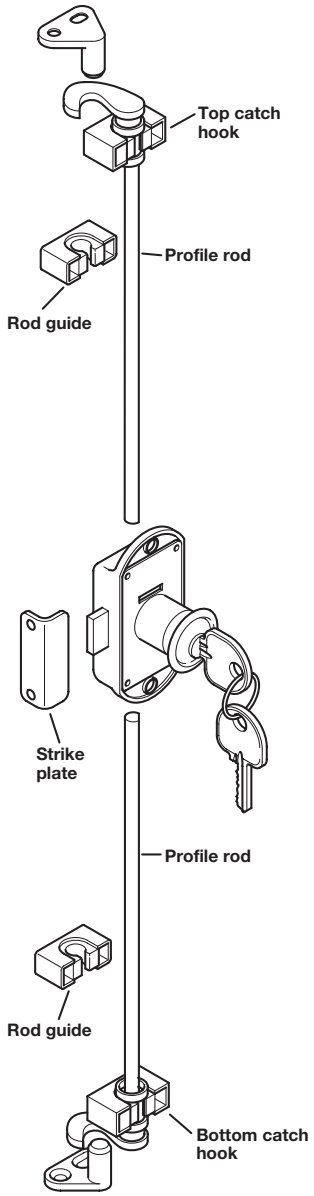

Dimensional data not binding. Dimensions in mm, inches are approximate. We reserve the right to alter specifications without notice.

Espagnolette Locks

→ Lock Case

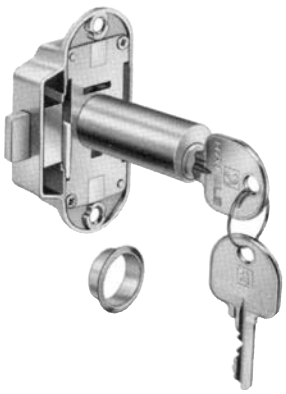

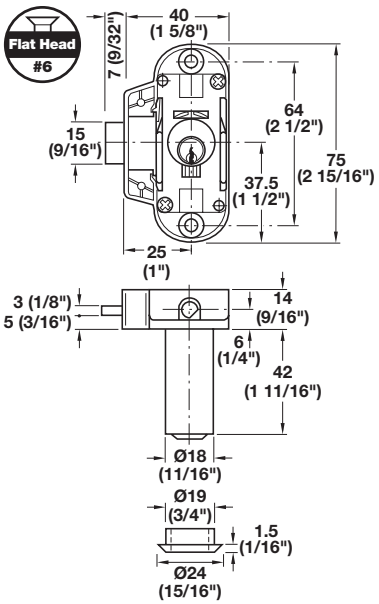

> H1 – keyed alike
> With extended Ø18 mm (11/16") cylinder
> To accommodate furniture knob handle made to your own design
> 5 pin levers = 10,000 key changes (H1 - H10,000)
> Closure travel: 180°
> Material: Zinc die-cast

Finish	Item No.
nickel-plated	225.62.290

Supplied With
2 Keys
Cylinder

Note
Master keying and General Master key systems available upon request.
Please include a key plan. Plan on 8 to 10 weeks to produce.
Please specify the required key change and mounting side when ordering.

→ Profile Rod

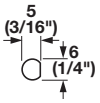

> Length: 2000 mm (78 3/4")
> Material: Drawn Steel

Finish	Item No.
nickel-plated	226.07.209

→ Top and Bottom Catch Hooks

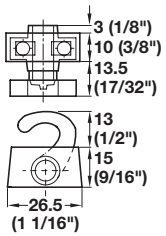

> Screw mounted
> Material: Zinc die-cast; Guides: Plastic

Finish	Item No.
nickel-plated	226.30.761

→ Rod Guides

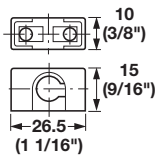

> Screw mounted
> Material: Zinc die-cast; Guides: Plastic

Finish	Item No.
nickel-plated	239.75.761

→ Locking Bolt, adjustable

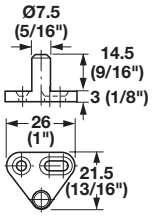

> Screw mounted
> Material: Zinc die-cast

Finish	Item No.
nickel-plated	226.57.708

Strike plates	page 10.54
Flat head screws	pages 12.7–12.8, 12.10, 12.13

Dimensional data not binding. Dimensions in mm, inches are approximate. We reserve the right to alter specifications without notice.

Ladder Lock

> Ladder pull locks into the floor
> Used for 1/2" or 3/4" (12 mm–19 mm) glass doors
> Lock operates at a comfortable 39 1/4" (997 mm) above the floor
> 1 3/8" (35 mm) diameter stainless steel pull
> For use on both single and double door applications
> Custom sizes and finishes available upon request

→ Model 160-HC

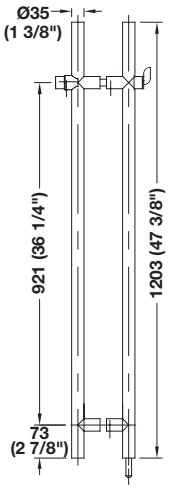

> Locking cylinder is small format interchangeable core (SFIC not included)
> Easy to operate Handicap (HC) inside thumbturn
> ADA compliant
> Material: Stainless Steel

Finish	Item No.
satin stainless steel US32D	902.01.000

Supplied With
Dust proof strike

Dimensional data not binding. Dimensions in mm, inches are approximate. We reserve the right to alter specifications without notice.

National Locks High Security

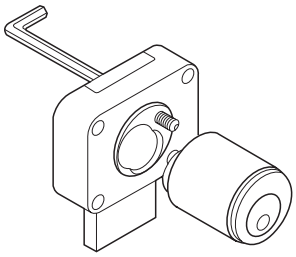

Note
The PLUS feature allows you to remove the cylinder from our pin tumbler box locks while the lock remains in place. No mounting screws need to be removed. Simply use a 2 mm (5/64") hex wrench from the back to remove the cylinder for re-keying.

> Locks on this page meet or exceed ANSI/BHMA Grade 2 (Grade 1 available upon request)
> Approved by the Woodworkers Institute (formerly WIC)

Note
Custom Master keying and General Master key systems available upon request.
2000 key changes are possible, special order 5 pin tumblers:
- Please include a key plan
- Plan on 2–3 weeks to produce

→ C8173 Door Locks

> For right or left hand applications
> 4 pin tumblers include 850 key changes
> Cylinder length 22 mm (7/8"), Bolt travel 19 mm (3/4")
> Surface mounted, requires a Ø24 mm (15/16") hole
> Key turns 360°

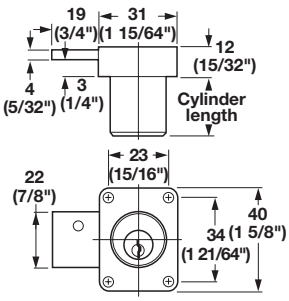

→ Keyed Different

> Material: Brass-plated

Finish	National No.	Item No.
brushed chrome	C8173-KD-26D	232.14.400
satin brass	C8173-KD-4	232.14.500

Supplied With
2 Keys, Strike plate, Screws

→ Master Keyed, Keyed Different

> Random key numbers only
> Please order master key separately (see below)
> Material: Lock and keys: Brass-plated

Finish	National No.	Item No.
brushed chrome	C8173-MKKD-26D	232.14.497

Supplied With
2 Keys, Strike plate, Screws

Note
Order master key and cylinder rosettes separately, below.

→ Cylinder Rosettes

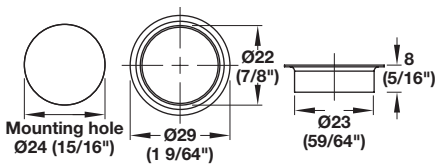

> Material: Brass

Finish	National No.	Item No.
brushed chrome	C2017-26D	232.14.000
satin brass	C2017-4	232.14.001

→ Master Key

> For MKKD locks above
> Material: Brass

National No.	Item No.
D4299	210.02.209

→ Keyed Alike

Finish	Keying #'s	National No.	Item No.
brushed chrome	101	C8173-101-26D	232.14.401
	103	C8173-103-26D	232.14.402
	107	C8173-107-26D	232.14.403
	915	C8173-915-26D	232.14.404
satin brass	107	C8173-101-4	232.14.503
	915	C8173-915-4	232.14.504

Supplied With
2 Keys, Strike plate, Screws

Keyed alike replacement keys page 10.39

Dimensional data not binding. Dimensions in mm, inches are approximate. We reserve the right to alter specifications without notice.

National Locks High Security

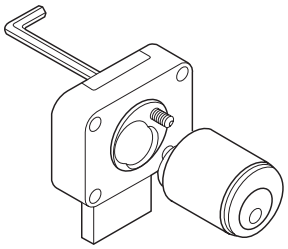

Note
The PLUS feature allows you to remove the cylinder from our pin tumbler box locks while the lock remains in place. No mounting screws need to be removed. Simply use a 2 mm (5/64") hex wrench from the back to remove the cylinder for re-keying.

> Locks on this page meet or exceed ANSI/BHMA Grade 2 (Grade 1 available upon request)
> Approved by the Woodworkers Institute (formerly WIC)

Note
Custom Master keying and General Master key systems available upon request.
2000 key changes are possible, special order 5 pin tumblers:
- Please include a key plan
- Plan on 2–3 weeks to produce

→ C8178 and C8179 Drawer Locks

> 4 pin tumblers include 850 key changes
> Surface mounted, requires a Ø24 mm (15/16") hole
> Bolt travel 19 mm (3/4")
> Key turn 360°

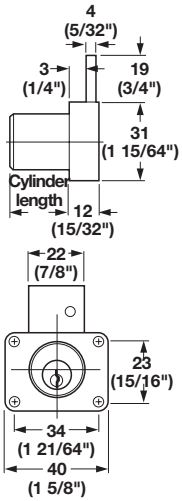

→ Keyed Different

> Material: Brass-plated

Finish	Cylinder length	National No.	Item No.
brushed chrome	22 (7/8")	C8178-KD-26D	232.14.300
brushed chrome	35 (1 3/8")	C8179-KD-26D	232.14.350
satin brass	22 (7/8")	C8178-KD-4	232.14.600
satin brass	35 (1 3/8")	C8179-KD-4	232.14.650

Supplied With
2 Keys, Strike plate, Screws

→ Master Keyed, Keyed Different

> Random key numbers only

Cylinder length	National No.	Item No.
22 (7/8")	C8178-MKKD-26D	232.14.347
35 (1 3/8")	C8179-MKKD-26D	232.14.397

Supplied With 2 Keys, Strike plate, Screws

Note Order master key and cylinder rosettes separately, below.

→ Master Key

> For MKKD locks above
> Material: Brass

National No.	Item No.
D4299	210.02.209

→ Cylinder Rosettes

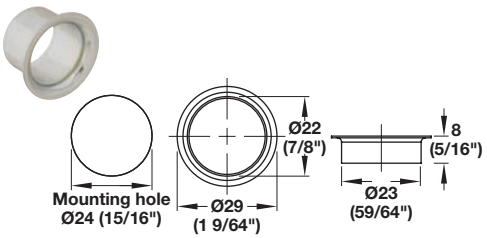

> Material: Brass

Finish	National No.	Item No.
brushed chrome	C2017-26D	232.14.000
satin brass	C2017-4	232.14.001

→ Keyed Alike

> Bolt travel 3/4"

Finish	Keying #'s	National No.	Cylinder length 22 mm (7/8")	National No.	Cylinder length 35 mm (1 3/8")
brushed chrome	101	C8178-101-26D	232.14.301	C8179-101-26D	232.14.351
	103	C8178-103-26D	232.14.302	C8179-103-26D	232.14.352
	107	C8178-107-26D	232.14.303	C8179-107-26D	232.14.353
	915	C8178-915-26D	232.14.304	C8179-915-26D	232.14.354
satin brass	107	C8178-107-4	232.14.603	C8179-107-4	232.14.653
	915	C8178-915-4	232.14.604	–	–

Supplied With
2 Keys, Strike plate, Screws

Keyed alike replacement keys page 10.39

Dimensional data not binding. Dimensions in mm, inches are approximate. We reserve the right to alter specifications without notice.

National Locks High Security

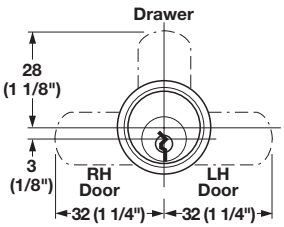

Note
Through the use of a shifter, the 360° key travel turns the cam 90° in either direction. Actual application determines which cam position is the locked position. Each lock is furnished with an alternate cam for opposite cam turn.

> Approved by the Woodworkers Institute (formerly WIC)

Note
Custom Master keying and General Master key systems available upon request.
2000 key changes are possible, special order 5 pin tumblers:
- Please include a key plan
- Plan on 2–3 weeks to produce

→ C8102 and C8103 Cam Locks

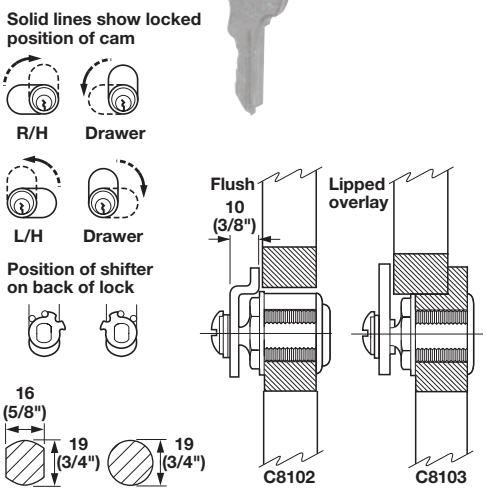

→ Keyed Different

> For drawer, left, or right hand applications
> 4 pin tumblers include 850 key changes
> Cam turns 90°, key turns 360°
> Material: Brass

Finish	Mounting type	Length	Material thickness	National No.	Item No
brushed chrome	flush	27 (1 1/16")	19 (3/4")	C8102-KD-26D	235.10.400
	lipped/overlay	30 (1 3/16")	22 (7/8")	C8103-KD-26D	235.10.300
satin brass	flush	27 (1 1/16")	19 (3/4")	C8102-KD-4	235.10.500
	lipped/overlay	30 (1 3/16")	22 (7/8")	C8103-KD-4	235.10.600

Supplied With
2 Keys, 2 Cams, Spur washer, Rosette

→ Master Keyed, Keyed Different

> Random key numbers only
> Material: Brass-plated; Finish: brushed chrome

Mounting type	Length	Material thickness	National No.	Item No.
Flush	27 (1 1/16")	19 (3/4")	C8102-MKKD-26D	235.10.497
Lipped/overlay	30 (1 3/16")	22 (7/8")	C8103-MKKD-26D	235.10.397

Supplied With
2 Keys, Strike plate, Screws

Note
Order master key separately, below.

→ Master Key

> For MKKD locks above
> Material: Brass

National No.	Item No.
D4299	210.02.209

→ Mounting Plate for Cam Locks

> Used where spur washer will not embed into hard surfaces
> W x H: 56 x 32 mm (2 1/4"×1 1/4")
> Material: Steel

National No.	Item No.
C2016-2C	210.02.081

→ Replacement Keys

> For locks: C8102, C8103, C8139, C8142, C8173, C8178 and C8179.
> Material: Brass

Keying No.	Item No.
101	210.02.201
103	210.02.202
107	210.02.203
915	210.02.204

Dimensional data not binding. Dimensions in mm, inches are approximate. We reserve the right to alter specifications without notice.

National Locks High Security

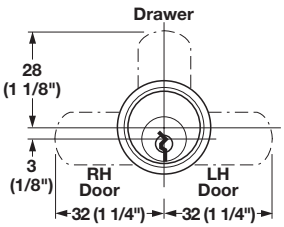

Note
Through the use of a shifter, the 360° key travel turns the cam 90° in either direction. Actual application determines which cam position is the locked position. Each lock is furnished with an alternate cam for opposite cam turn.

> Approved by the Woodworkers Institute (formerly WIC)

Note
Custom Master keying and General Master key systems available upon request.
2000 key changes are possible, special order 5 pin tumblers:
- Please include a key plan
- Plan on 2–3 weeks to produce

→ C8102 and C8103 Cam Locks

> For drawer, left, or right hand applications
> 4 pin tumblers include 850 key changes
> Cam turns 90°, key turns 360°

C8102 shown

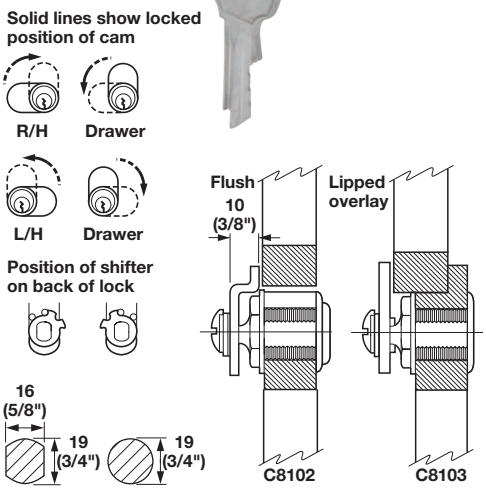

→ Keyed Alike

> Mounting Type: Flush
> Cylinder length: 27 mm (1 1/16")
> Maximum material thickness: (3/4")
> Material: Brass-plated

Finish	Keying #'s	National No.	Item No.
brushed chrome	101	C8102-101-26D	235.10.401
brushed chrome	103	C8102-103-26D	235.10.402
brushed chrome	107	C8102-107-26D	235.10.403
brushed chrome	915	C8102-915-26D	235.10.404
satin brass	107	C8102-107-4	235.10.503
satin brass	915	C8102-915-4	235.10.504

Supplied With
2 Keys
2 Cams
Spur washer
Rosette

> Mounting Type: Lipped/Overlay
> Cylinder length: 30 mm (1 3/16")
> Maximum material thickness: 22 mm (7/8")
> Material: Brass-plated

Finish	Keying #'s	National No.	Item No.
brushed chrome	101	C8103-101-26D	235.10.301
brushed chrome	103	C8103-103-26D	235.10.302
brushed chrome	107	C8103-107-26D	235.10.303
brushed chrome	915	C8103-915-26D	235.10.304
satin brass	107	C8103-107-4	235.10.603
satin brass	915	C8103-915-4	235.10.604

Supplied With
2 Keys
2 Cams
Spur washer
Rosette

→ Mounting Plate for Cam Locks

> Used where spur washer will not embed into hard surfaces
> W x H: 56 x 32 mm (2 1/4"×1 1/4")
> Material: Steel

National No.	Item No.
C2016-2C	210.02.081

Keyed alike replacement keys page 10.39

Dimensional data not binding. Dimensions in mm, inches are approximate. We reserve the right to alter specifications without notice.

National Locks High Security

> Approved by the Woodworkers Institute (formerly WIC)

Note
Custom Master keying and General Master key systems available upon request.
2000 key changes are possible, special order 5 pin tumblers:
- Please include a key plan
- Plan on 2–3 weeks to produce

→ C8142 Sliding Door Locks

> For application in sliding wood doors
> 4 pin tumblers include 100 key changes
> Cylinder length 29 mm (1 1/8"), Bolt travel 11 mm (7/16")
> Surface mounted, requires a Ø24 mm (15/16") hole
> Key turns 90°

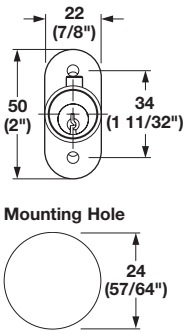

→ Keyed Different

> Material: Brass-plated

Finish	National No.	Item No.
brushed chrome	C8142-KD-26D	234.48.400

Supplied With
2 Keys, Locking sleeve, Screws

→ Master Keyed, Keyed Different

> Random key numbers only
> Material: Brass-plated

Finish	National No.	Item No.
brushed chrome	C8142-MKKD-26D	234.48.498

Supplied With
2 Keys, Locking sleeve, Screws

Note
Order master key and cylinder rosettes separately, below.

→ Master Key

> For MKKD locks above
> Material: Brass

National No.	Item No.
D4299	210.02.209

→ Keyed Alike

> Material: Brass-plated

Finish	Keying #'s	National No.	Item No.
brushed chrome	101	C8142-101-26D	234.48.401
	103	C8142-103-26D	234.48.402

Supplied With
2 Keys, Locking sleeve, Screws

→ Cylinder Rosettes

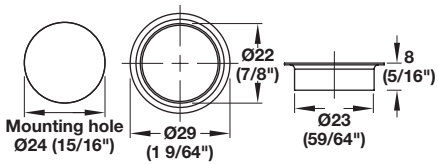

> Material: Brass

Finish	National No.	Item No.
brushed chrome	C2017-26D	232.14.000
satin brass	C2017-4	232.14.001

Keyed alike replacement keys page 10.39

Dimensional data not binding. Dimensions in mm, inches are approximate. We reserve the right to alter specifications without notice.

National Locks High Security

> Approved by the Woodworkers Institute (formerly WIC)

Note
Custom Master keying and General Master key systems available upon request.
2000 key changes are possible, special order 5 pin tumblers:
- Please include a key plan
- Plan on 2–3 weeks to produce

→ C8139 Spring Bolt Locks

> For right hand applications
> 4 pin tumblers include 850 key changes
> Cylinder length: 19 mm (3/4"); Bolt travel: 5.5 mm (7/32")
> Surface mounted, requires a Ø24 mm (15/16") hole
> Key turns 90°

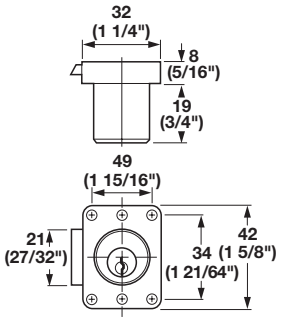

→ Keyed Different

> Material: Brass-plated

Finish	National No.	Item No.
brushed chrome	C8139-KD-26D	232.06.400

Supplied With 2 Keys, Locking sleeve, Screws

→ Master Keyed, Keyed Different

> Random key numbers only
> Material: Brass-plated

Finish	National No.	Item No.
brushed chrome	C8139-MKKD-26D	232.06.497

Supplied With 2 Keys, Strike plate, Screws

Note Order master key and cylinder rosettes separately, below.

→ Keyed Alike

> Material: Brass

Finish	Keying #'s	National No.	Item No.
brushed chrome	101	C8139-101-26D	232.06.401
	103	C8139-103-26D	232.06.402
	107	C8139-107-26D	232.06.403
	915	C8139-915-26D	232.06.404

Supplied With 2 Keys, Locking sleeve, Screws

→ Master Key

> For MKKD locks above
> Material: Brass

National No.	Item No.
D4299	210.02.209

→ Cylinder Rosettes

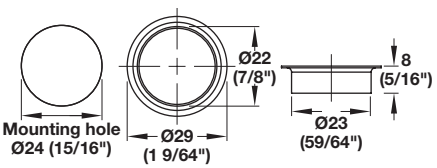

> Material: Brass

Finish	National No.	Item No.
brushed chrome	C2017-26D	232.14.000
satin brass	C2017-4	232.14.001

Keyed alike replacement keys page 10.39

Dimensional data not binding. Dimensions in mm, inches are approximate. We reserve the right to alter specifications without notice.

National Locks C Series

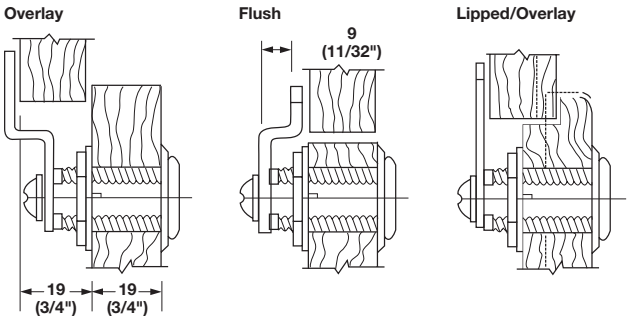

> Cam Lock, for wood or metal
> For right or left handed doors with lipped/overlay construction (straight cam) or flush construction (formed cam)
> For overlay application, the combined thickness of front and frame cannot exceed the cylinder length

Note
Custom Master keying available upon request.

→ C8053 Cam Locks

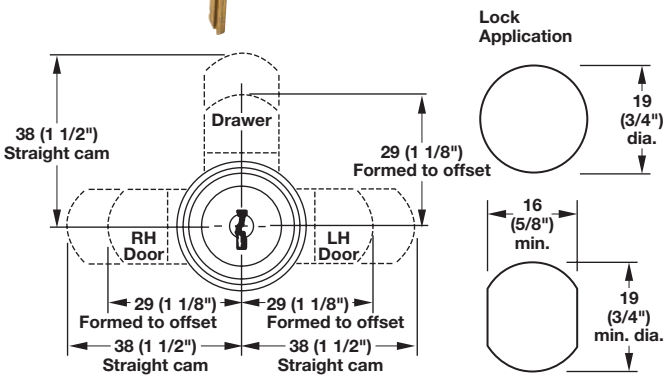

→ Keyed Different

> 90° cam turn on all locks; key is removable in both locked and unlocked positions
> Cylinder length: 30 mm (1 3/16")
> Material thickness: max. 22 mm (7/8")
> Material: Zinc, Nickel-plated

Finish	National No.	Item No.
bright nickel	C8053-KD-14A	235.10.620

Supplied With
2 Keys, Trim washer, 2 Cams, 2 Stop washers, Spur washer for wood mounting nut

→ Master Keyed, Keyed Different

> Random key numbers only
> Material: Brass-plated

Finish	National No.	Item No.
bright nickel	C8053-MKKD-14A	235.10.628

Supplied With
2 Keys, Trim washer, 2 Cams, 2 Stop washers, Spur washer for wood mounting nut

Note
Order master key separately, below.

→ Master Key

> For MKKD locks above
> Material: Brass

National No.	Item No.
D8799	210.02.219

→ Keyed Alike

> Material: Zinc/Nickel-plated

Finish	National No.	Item No.
bright nickel	C346A	235.10.621
	C390A	235.10.622
	C413A	235.10.623
	C415A	235.10.624
	C420A	235.10.625
	C642A	235.10.626

Supplied With
2 Keys, Trim washer, 2 Cams, 2 Stop washers, Spur washer for wood mounting nut

→ Slam Cam

> Self-locking; Spring-loaded latch
> Retrofit or upgrade
> Compatible with National cam locks C8051-C8075
> Material: Zinc/Plastic

National No.	Item No.
C7017	235.10.980

Supplied With 1 Self-locking component, 4 Spacers, 1 Washer (for C8051 and C8052 only), 3 Mounting screws

Dimensional data not binding. Dimensions in mm, inches are approximate. We reserve the right to alter specifications without notice.

National Locks C Series

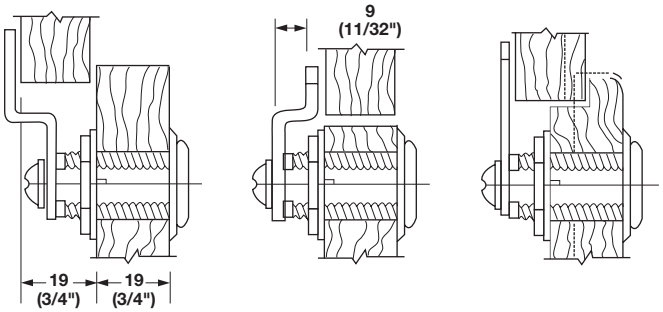

> Cam Lock, for wood or metal
> For right or left handed doors with lipped/overlay construction (straight cam) or flush construction (formed cam)
> For overlay application, the combined thickness of front and frame cannot exceed the cylinder length

Note
Custom Master keying available upon request.

→ C8055 Cam Locks

→ Keyed Different

> 90° cam turn on all locks; key is removable in both locked and unlocked positions
> Cylinder length: 36 mm (1 7/16")
> Material thickness: max. 28 mm (1 1/8")
> Material: Zinc/Nickel-plated

Finish	National No.	Item No.
bright nickel	C8055-KD-14A	235.10.810

Supplied With
2 Keys, Trim washer, 2 Cams, 2 Stop washers,
Spur washer for wood mounting nut

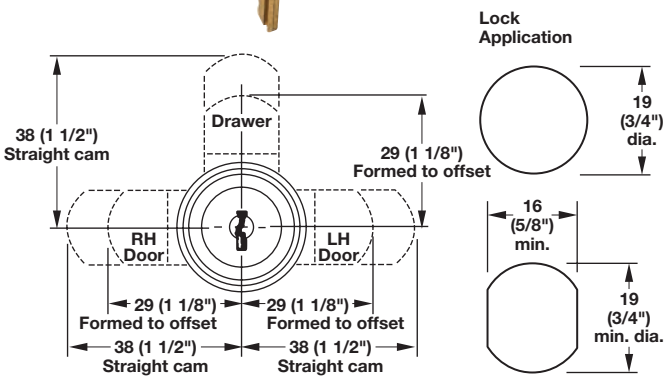

→ Master Keyed, Keyed Different

> Random key numbers only
> Material: Brass-plated

Finish	National No.	Item No.
bright nickel	C8055-MKKD-14A	235.10.898

Supplied With
2 Keys, Trim washer, 2 Cams, 2 Stop washers,
Spur washer for wood mounting nut

Note
Order master key separately, below.

→ Master Key

> For MKKD locks above
> Material: Brass

National No.	Item No.
D8799	210.02.219

→ Keyed Alike

> Material: Zinc/Nickel-plated

Finish	National No.	Item No.
bright nickel	C346A	235.10.811
	C390A	235.10.812
	C413A	235.10.813
	C415A	235.10.814
	C420A	235.10.815

Supplied With
2 Keys, Trim washer
2 Cams
2 Stop washers
Spur washer for wood mounting nut

Dimensional data not binding. Dimensions in mm, inches are approximate. We reserve the right to alter specifications without notice.

National Locks C Series

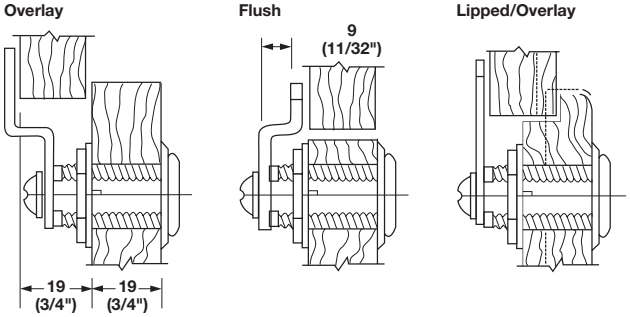

> Cam Lock, for wood or metal
> For right or left handed doors with lipped/overlay construction (straight cam) or flush construction (formed cam)
> For overlay application, the combined thickness of front and frame cannot exceed the cylinder length

Note
Custom Master keying available upon request.

→ C8060 Cam Locks

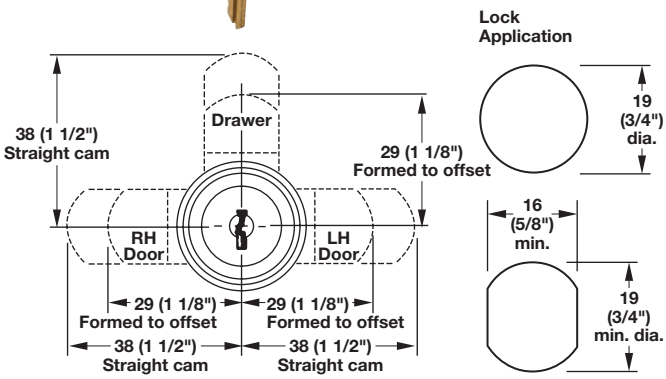

→ Keyed Different

> 180° cam turn on all locks; key is removable in both locked and unlocked positions
> Cylinder length: 45 mm (1 3/4")
> Material thickness: max. 36 mm (1 7/16")
> Material: Zinc/Nickel-plated

Finish	National No.	Item No.
bright nickel	C8060-KD-14A	235.10.650

Supplied With
2 Keys, Trim washer, 2 Cams, 2 Stop washers, Spur washer for wood mounting nut

→ Master Keyed, Keyed Different

> Random key numbers only
> Material: Brass-plated

Finish	National No.	Item No.
bright nickel	C8060-MKKD-14A	235.10.658

Supplied With
2 Keys, Trim washer, 2 Cams, 2 Stop washers, Spur washer for wood mounting nut

Note
Order master key separately, below.

→ Keyed Alike

> Material: Zinc/Nickel-plated

Finish	National No.	Item No.
bright nickel	C346A	235.10.651
	C390A	235.10.652
	C413A	235.10.653
	C415A	235.10.654
	C420A	235.10.655
	C642A	235.10.656

Supplied With
2 Keys, Trim washer, 2 Cams, 2 Stop washers, Spur washer for wood mounting nut

→ Master Key

> For MKKD locks above
> Material: Brass

National No.	Item No.
D8799	210.02.219

→ Slam Cam

> Self-locking; Spring-loaded latch
> Retrofit or upgrade
> Compatible with National cam locks C8051-C8075
> Material: Zinc/Plastic

National No.	Item No.
C7017	235.10.980

Supplied With 1 Self-locking component, 4 Spacers, 1 Washer (for C8051 and C8052 only), 3 Mounting screws

Dimensional data not binding. Dimensions in mm, inches are approximate. We reserve the right to alter specifications without notice.

National Locks C Series

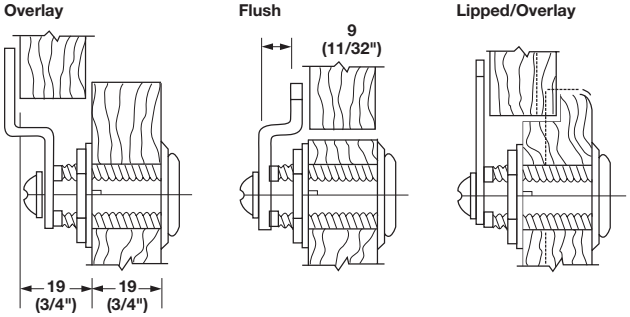

> Cam Lock, for wood or metal
> For right or left handed doors with lipped/overlay construction (straight cam) or flush construction (formed cam)
> For overlay application, the combined thickness of front and frame cannot exceed the cylinder length

Note
Custom Master keying available upon request.

→ C8073 Cam Locks

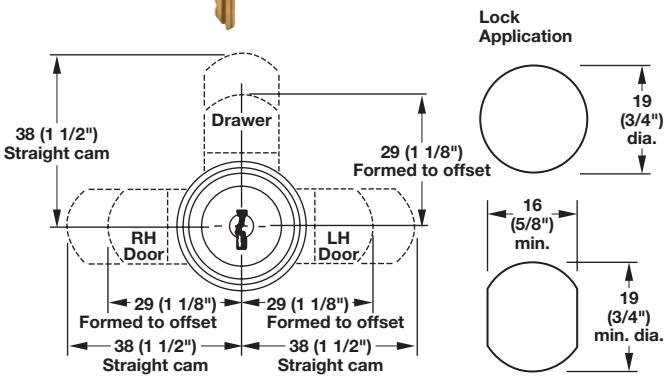

→ Keyed Different

> 180° cam turn on all locks; key is removable in both locked and unlocked positions
> Cylinder length: 30 mm (1 3/16")
> Material thickness: max. 22 mm (7/8")
> Material: Zinc/Nickel-plated

Finish	National No.	Item No.
bright nickel	C8073-KD-14A	235.10.630

Supplied With
2 Keys, Trim washer, 2 Cams, 2 Stop washers, Spur washer for wood mounting nut

→ Master Keyed, Keyed Different

> Random key numbers only
> Material: Brass-plated

Finish	National No.	Item No.
bright nickel	C8073-MKKD-14A	235.10.698

Supplied With
2 Keys, Trim washer, 2 Cams, 2 Stop washers, Spur washer for wood mounting nut

Note
Order master key separately, below.

→ Keyed Alike

> Material: Zinc/Nickel-plated

Finish	National No.	Item No.
bright nickel	C346A	235.10.631
	C390A	235.10.632
	C413A	235.10.633
	C415A	235.10.634
	C420A	235.10.635
	C642A	235.10.636

Supplied With
2 Keys, Trim washer, 2 Cams, 2 Stop washers, Spur washer for wood mounting nut

→ Master Key

> For MKKD locks above
> Material: Brass

National No.	Item No.
D8799	210.02.219

→ Slam Cam

> Self-locking; Spring-loaded latch
> Retrofit or upgrade
> Compatible with National cam locks C8051-C8075
> Material: Zinc/Plastic

National No.	Item No.
C7017	235.10.980

Supplied With 1 Self-locking component, 4 Spacers, 1 Washer (for C8051 and C8052 only), 3 Mounting screws

Dimensional data not binding. Dimensions in mm, inches are approximate. We reserve the right to alter specifications without notice.

National Locks C Series

→ Disc Tumbler Cam Lock C8061

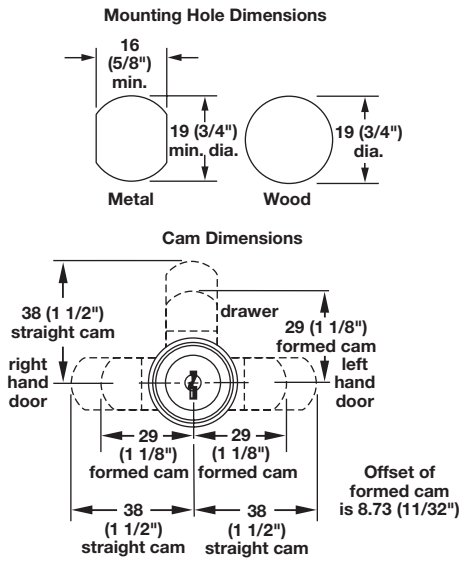

> Choice of either 90 or 180 cam turn
> Key removable in both locked and unlocked positions
> Cylinder length: 51 mm (2")
> Material thickness: up to 46 mm (1 13/16")
> Key Codes: C346A, C390A, C413A, C415A, C420A and C642A
> Keys together with other locks using D8785 key blank and master D8783 key blank
> Material: Zinc

Finish	Keying	Item No.
bright nickel	different	235.10.505
bright nickel	alike	235.10.506
bright nickel	master-keyed, different	235.10.507
antique brass	different	235.10.508
antique brass	alike	235.10.509
antique brass	master-keyed, different	235.10.510
matt black	different	235.10.511
matt black	alike	235.10.512
matt black	master-keyed, different	235.10.513

Supplied With
2 keys, FlexaCam spacers, Trim washer, Spur washer for wood, Mounting nut, 2 Cams, 2 Cam stop washers

→ Padlockable Cam Lock C8010

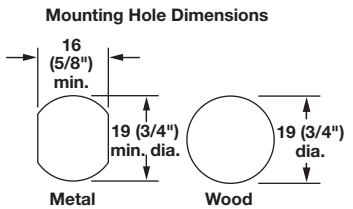

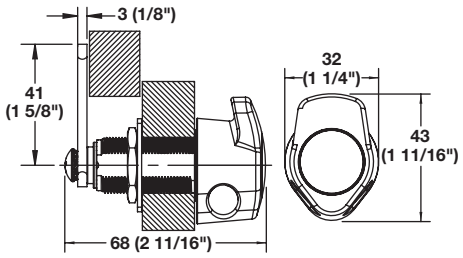

> Cylinder length: 37 mm (1 7/16")
> Material thickness: up to 29 mm (1 1/8")
> Accepts padlocks with a shackle up to 10 mm (3/8") in diameter
> Choice of either 90° or 180° clockwise or counterclockwise rotation
> Material: Zinc

Finish	Item No.
bright nickel	235.10.637
satin nickel	235.10.638
black	235.10.639

Supplied With
FlexaCam spacers, Mounting plate for wood installation, Cam, Detent washer, Rotation stop, Mounting hardware

Note
Padlock not included.

→ Slam Cam

> Self-locking; Spring-loaded latch
> Retrofit or upgrade
> Compatible with National cam locks C8051-C8075
> Material: Zinc/Plastic

National No.	Item No.
C7017	235.10.980

Supplied With
1 Self-locking component, 4 Spacers, 1 Washer (for C8051 and C8052 only), 3 Mounting screws

Dimensional data not binding. Dimensions in mm, inches are approximate. We reserve the right to alter specifications without notice.

This page is left blank intentionally.

Dimensional data not binding. Dimensions in mm, inches are approximate. We reserve the right to alter specifications without notice.

KABA Locks High Security

→ Deadbolt Lock

> With with Ø22 mm (7/8") KABA cylinder
> Right hand (can be adapted for left/drawer use)
> 8 pin levers = 100,000 key changes
> Backset: 25 mm (1")

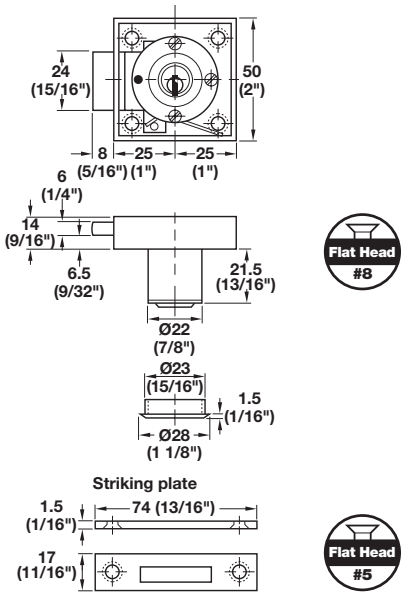

→ Keyed Different

> Material: Case: Steel; Strike Plate and Bolt: Brass

Finish	Item No.
nickel-plated	230.06.224

Supplied With
2 Keys, Cylinder rosette, Strike plate

→ Keyed Alike (K1)

> Material: Case: Steel; Strike Plate and Bolt: Brass

Finish	Item No.
nickel-plated	230.06.813

Supplied With
2 Keys, Cylinder rosette, Strike plate

→ Spring Bolt/Slam Lock

> With with Ø22 mm (7/8") KABA cylinder
> Right hand (can be adapted for left/drawer use)
> 8 pin levers = 100,000 key changes
> Backset: 25 mm (1")

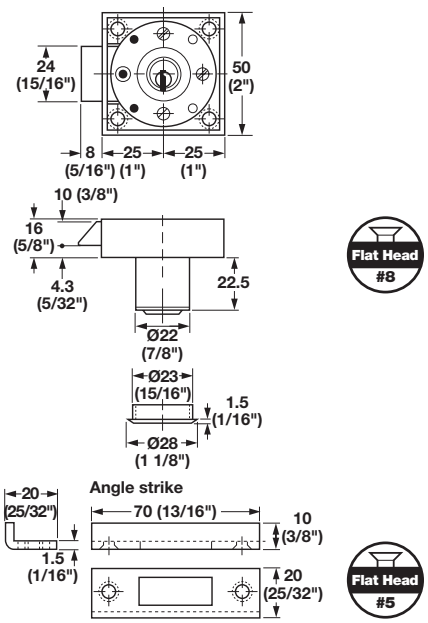

→ Keyed Different

> Material: Case: Steel; Strike Plate and Bolt: Brass

Finish	Item No.
nickel-plated	231.06.229

Supplied With
2 Keys, Cylinder rosette, Strike plate

→ Keyed Alike (K1)

> Material: Case: Steel; Strike Plate and Bolt: Brass

Finish	Item No.
nickel-plated	231.06.818

Supplied With
2 Keys, Cylinder rosette, Strike plate

Note
Master keying and General Master key systems available upon request. Please include a key plan. Plan on 8–10 weeks to produce.

Flat head screws pages 12.7–12.8, 12.10, 12.13

Dimensional data not binding. Dimensions in mm, inches are approximate. We reserve the right to alter specifications without notice.

Keyed Cabinet Locks

> Economical cam locks
> Key turn is 90°
> Key is removable in locked and unlocked position
> Keyed alike
> Keyed different, 168 possibilities
> Key changes randomly selected for keyed different option

Note
Master keying or key plans are not available.

→ SC Series

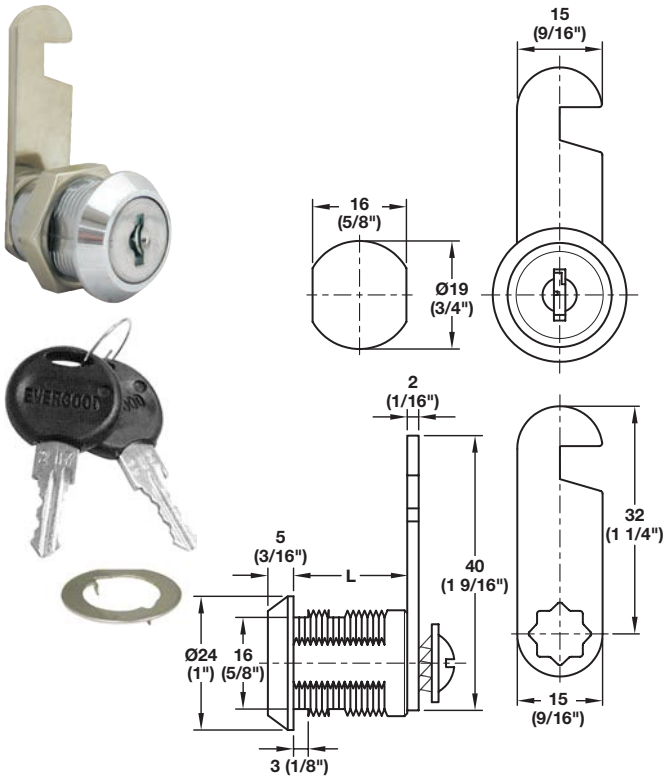

→ Cam Locks 16 mm (5/8")

> Includes a straight cam 39 mm (1 9/16") long
> 5 plate levers
> Dim. L: 25 mm (1")
> Material: Zinc alloy; Finish: chrome-plated

Keying	Item No.
Different	235.20.200
Alike	235.20.201

Supplied With
2 Keys
Lock nut
Cam plate
Washer

→ Cam Locks 19 mm (3/4")

> Includes a straight cam 39 mm (1 9/16") long
> 5 plate levers
> Dim. L: 30 mm (1 1/8")
> Material: Zinc alloy; Finish: chrome-plated

Keying	Item No.
Different	235.20.210
Alike	235.20.211

Supplied With
2 Keys
Lock nut
Cam plate
Washer

→ Offset Cams

> Length: 30 mm (1 3/16")
> Material: Zinc yellow

Offset	Item No.
4 (3/16")	219.13.971
6 (1/4")	219.13.972
8 (5/16")	219.13.973

Note
Order separately to replace straight cams.

Dimensional data not binding. Dimensions in mm, inches are approximate. We reserve the right to alter specifications without notice.

Keyed Cabinet Locks SC Series

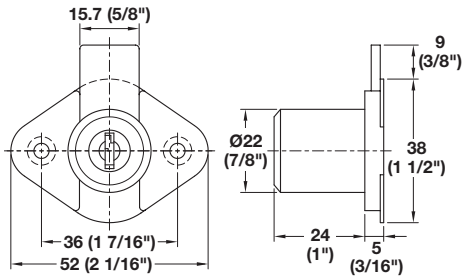

> Economical drawer locks
> Key is removable in locked and unlocked position
> Keyed different has 168 possibilities
> Key changes randomly selected for keyed different option

Note
Master keying systems or key plans are not available.

→ Deadbolt Drawer Lock

> For wood drawers
> For 19 mm (3/4") material
> 5 Plate levers
> 180° key rotation
> Throw: 9 mm (3/8")
> Material: Zinc Alloy; Finish: chrome-plated

Keying	Item No.
Different	230.35.200
Alike	230.35.201

Supplied With
2 Keys, Rosette

→ Spacer

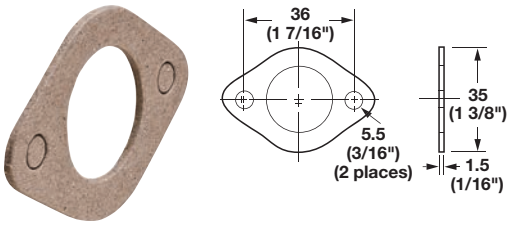

> Place between lock and inside of drawer to control how much lock protrudes through face
> Material: Cardboard

	Item No.
	210.02.082

→ Glass Door Lock

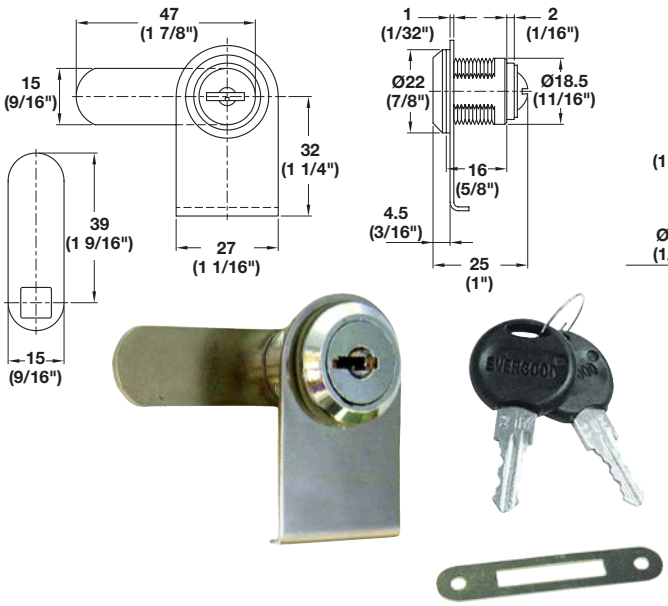

> Keyed alike
> For a single door
> For 5–6 mm (3/16"–1/4") thick glass
> Material: Zinc Alloy

Finish	Item No.
chrome-plated	233.21.201

Supplied With
2 Keys, Steel front plate, Plastic washer, Lock nut, Straight cam, Steel strike

Note
Screws are not supplied.

Dimensional data not binding. Dimensions in mm, inches are approximate. We reserve the right to alter specifications without notice.

Keyed Cabinet Locks

→ Glass Door Locks

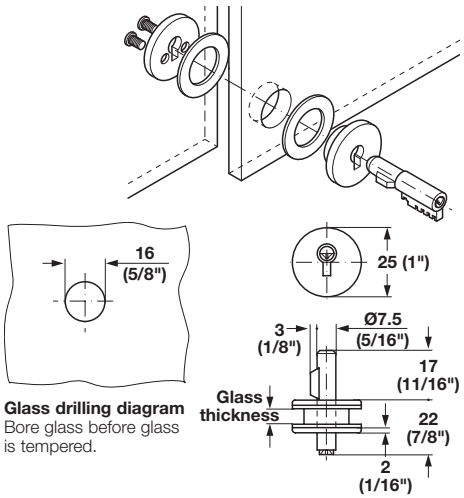

Glass drilling diagram
Bore glass before glass is tempered.

> For installation in glass panels
> Glass thickness: 5–7 mm (3/16"–1/4")
> 50 key changes
> Closure travel: 90°
> Material: Housing: Zinc die-cast, chrome-plated; Cylinder lock: Steel

Keying	Item No.
Different	233.22.207
Alike #851	233.22.217

Supplied With
2 Keys
2 Rubber washers
2 Screws

Note
Replacement keys are not available.

→ Glass Door Pin Lock

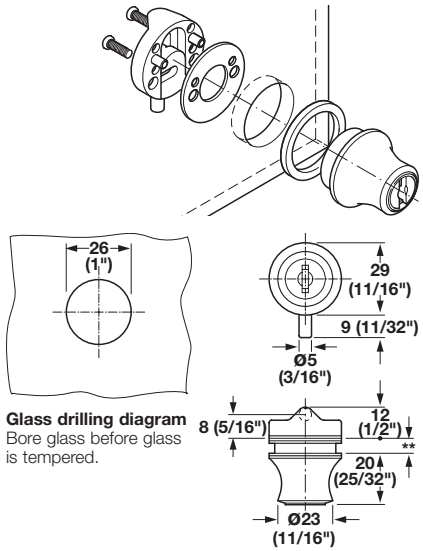

Glass drilling diagram
Bore glass before glass is tempered.

> Backplate, screw mounted
> Glass thickness: 4–6 mm (3/16"–1/4")
> With 6 plate levers = 1000 Key Changes
> Closure travel: 90°
> Material: Zinc die-cast; Finish: nickel-plated matt

Keying	Item No.
Different	233.05.600
Alike #N7921PL	233.05.601

Supplied With
2 Keys
2 Rubber spacers
2 Screws

→ Glass Door Lock – Non-boring

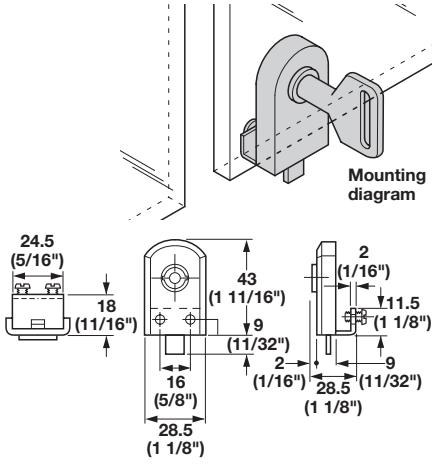

> Clamps to glass with two set screws; pad is included to protect glass
> Glass thickness: 6 mm (1/4")
> Bolt travel: 9 mm (3/8")
> Key is removable in both locked and unlocked position
> Material: Steel/Plastic

Color	Item No.
black	233.12.600

Supplied With
2 Keys
Protective pad

Dimensional data not binding. Dimensions in mm, inches are approximate. We reserve the right to alter specifications without notice.

Built-In Gang Locking System – Accessories

Rear panel
> The guides and arresting pins are designed for a bar section measuring 16 × 3 mm (5/8" x 1/4")
> Hooks are spring loaded, the drawer can be kept open as needed and shut later
> Hooks are adjustable on the locking bar enabling them to be individually adapted to drawers of varying heights
> Movement of the locking bar is affected by a roller, mounted at the upper end of the bar and actuated by a wedge-shaped driver

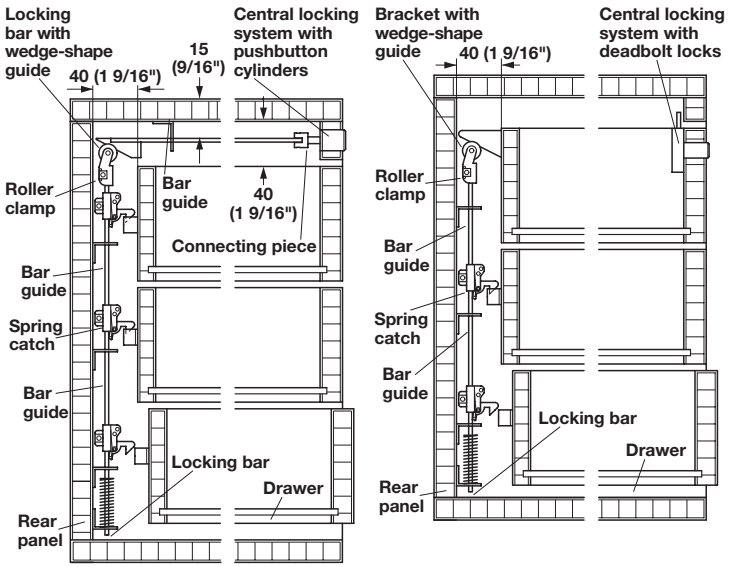

→ Roller Clamp

> For locking bar
> Material: Steel

Finish	Item No.
zinc-plated	237.42.010

→ Bar Guide

> For locking bar, screw mounted
> Material: Steel

Finish	Item No.
zinc-plated	237.42.029

→ Spring Catch

> For locking bar, screw mounted
> Material: Steel

Finish	Item No.
zinc-plated	237.42.001

→ Drawer Component

> For spring catch, screw mounted
> Material: Steel

Finish	Item No.
zinc-plated	237.42.038

→ Angled Activator

> For use with deadbolt locks
> Material: Steel, galvanized

	Item No.
	237.42.047

→ Locking Bar

> With wedge-shape guide
> Length: 600 mm (23 5/8")
> Material: Steel, galvanized

	Item No.
	237.42.207

→ Vertical Lock Bar

> With attached spring and bar guide
> Length: 600 mm (23 5/8")
> Material: Steel, galvanized

	Item No.
	237.42.109

→ Connecting Piece

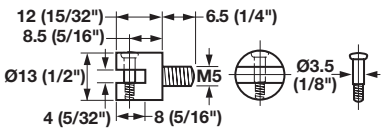

> For use with push-button locks
> Material: Brass

	Item No.
	234.58.997

Deadbolt locks	pages 10.37–10.38
Push button locks	page 10.29
Pan head screws	pages 12.9–12.10

Dimensional data not binding. Dimensions in mm, inches are approximate. We reserve the right to alter specifications without notice.

Strike Plates

→ Strike Plate

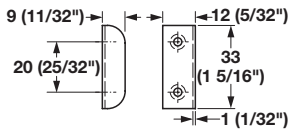

Flat Head #5

> Material: Steel

Color/Finish	Item No.
bronzed	239.40.301
nickel-plated	239.40.703
brass-plated	239.40.507

→ Strike Plate

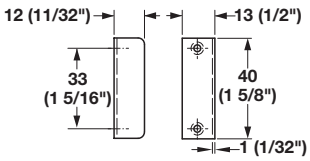

Flat Head #5

> Material: Steel

Finish	Item No.
nickel-plated	239.41.013

→ Strike Plate

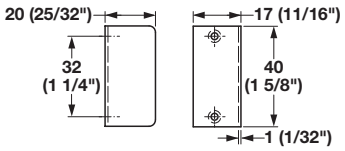

Flat Head #5

> Material: Steel

Finish	Item No.
nickel-plated	239.41.022

→ Strike Plate

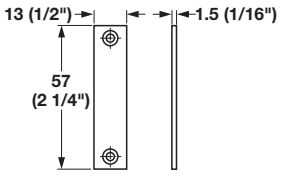

Flat Head #5

> Material: Steel

Finish	Item No.
nickel-plated	239.26.703

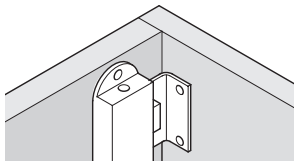

→ Strike Plate

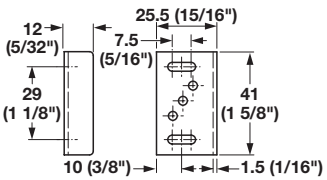

Pan Head #6

> With adjustment slots
> Material: Steel

Finish	Item No.
nickel-plated	239.47.604

→ Strike Plate

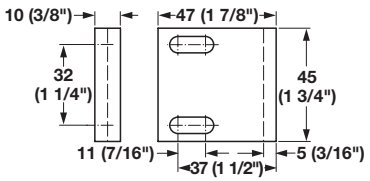

VARIANTA 5

> For series drilled holes with adjustment slots
> Material: Plastic

Color	Item No.
white	239.44.774

→ Strike Plate

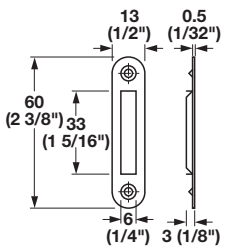

Flat Head #5

> Material: Steel

Finish	Item No.
nickel-plated	239.05.704
brass-plated	239.05.508

Flat head screws	pages 12.7–12.8, 12.10, 12.13
Pan head screws	pages 12.9–12.10
Varianta screws	page 12.16

Dimensional data not binding. Dimensions in mm, inches are approximate. We reserve the right to alter specifications without notice.

Automatic Door Bolt

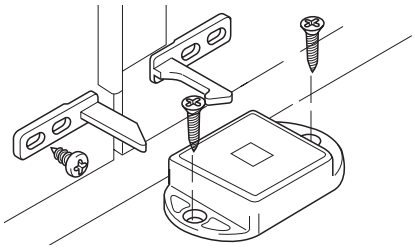

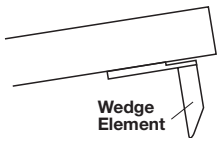

- > Locks double panel doors without additional stop strips or furniture bolts
- > The door catch is mounted inside the cabinet
- > The hook and wedge element are mounted to the inside of either the right or left door
- > The door with the hook element must be closed first
- > Upon closing the second door, the wedge element automatically blocks the door catch
- > The door with the wedge element must now be made lockable with a lock

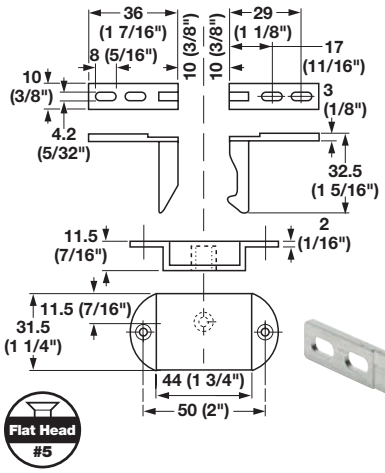

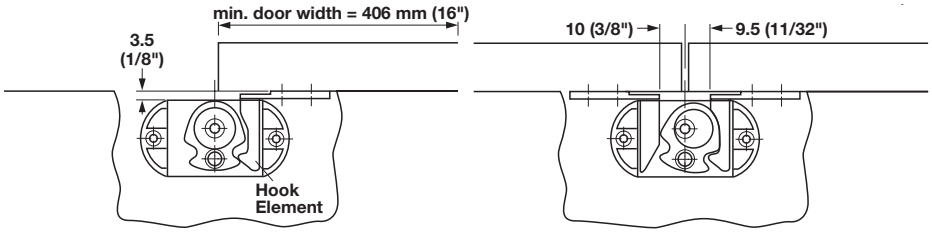

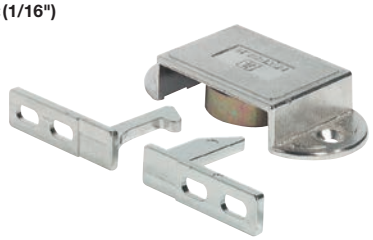

- > Must be combined with either a cam or deadbolt lock
- > Functions best when chosen lock locks into the cabinet top or bottom
- > Make sure that doors lock tight without too much 'play' and that tall doors do not offer too much flex
- > Material: Zinc die-cast

Finish	Item No.
nickel-plated	245.58.754

Note
Minimum door width is 406 mm (16").

Double Door Latch

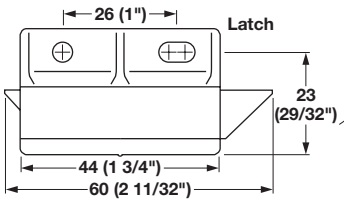

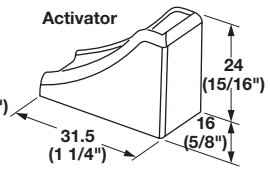

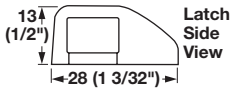

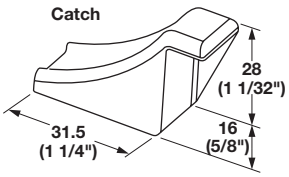

- > No need to reach inside cabinet to release elbow catch
- > Doors can be closed in any order
- > Low profile latch mechanism reduces product footprint inside cabinet
- > Requires use of a single lock (sold separately)
- > Allows two or three point locking for standard or wardrobe style double door cabinets when used with a lock
- > Eliminates the need for an elbow catch, or other devices, and allows hardware to be installed out of the way

Note
For cabinets taller than 1219 mm (48") it is recommended to use both top and bottom mount latches. For locking a pair of doors with one lock (not included).

- > Easy to install and use
- > Exceeds pull force above 150 lbs.
- > Material: Plastic

Color	Lock Placement	Item No.
black	RH top mounted, LH bottom mounted	245.58.300
black	LH top mounted, RH bottom mounted	245.58.301
white	RH top mounted, LH bottom mounted	245.58.700
white	LH top mounted, RH bottom mounted	245.58.701

Supplied With
Latch
Activator
Catch
Mounting instruction

Flat head screws pages 12.7–12.8, 12.10, 12.13

Dimensional data not binding. Dimensions in mm, inches are approximate. We reserve the right to alter specifications without notice.

Locks

> Durable construction secures doors, drawers, or lockers when used with a padlock
> Attractive plated finish
> Includes straight cam 24 mm (15/16") long
> Material thickness: max. 28 mm (1 1/8")
> Screw mounted

→ Hasp Cam

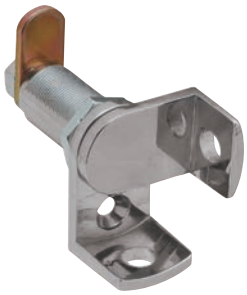

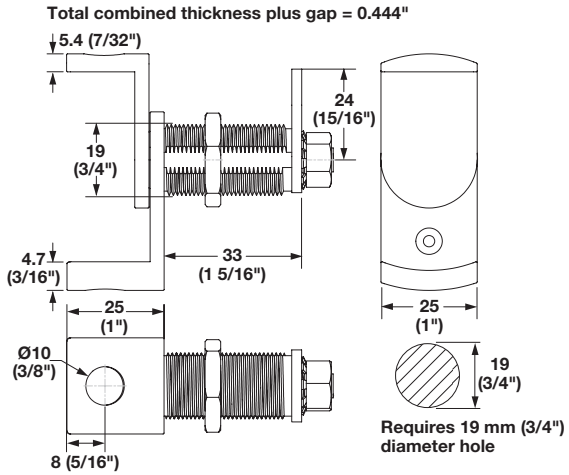

> For wood doors, drawers, or lockers
> Material: Plate: Zinc Alloy; Accessories: Steel

Finish	Item No.
polished chrome	235.17.200
black	235.17.300
matt nickel	235.17.600

Supplied With
Lock nut
24 mm (15/16") straight cam
Mounting nut

→ Offset Cams

> Material: Steel, galvanized

Offset	Item No.
4 (5/32")	219.13.971
6 (1/4")	219.13.972
8 (5/16")	219.13.973

Note
Order separately to replace straight cams.

Rod, guides, locking bolts	page 10.35
Flat head screws	pages 12.7–12.8, 12.10, 12.13

Dimensional data not binding. Dimensions in mm, inches are approximate. We reserve the right to alter specifications without notice.

Push Button Locks

> Well suited for the recreation or boating industry
> Locks operate by push button without a key
> All push button locks can be used in wet areas
> When locked there is no protrusion of the knob
> Push-Lock featuring push-button locking mechanism, used as a deadbolt lock for doors or drawers

→ Push-Lock

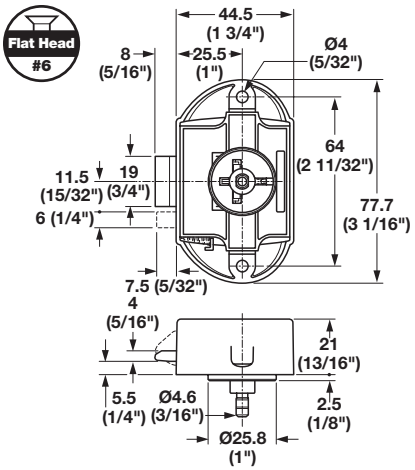

Backset 25 (1")

> Screw mounted
> Material: Plastic

Color	Item No.
nickel-plated matt, lacquered	211.63.642
white	211.63.702
brown	211.63.102

> Material: Zinc alloy

Finish	Item No.
nickel matt	211.63.622

Note
Order push-button knobs and rosettes separately

→ Push-Lock

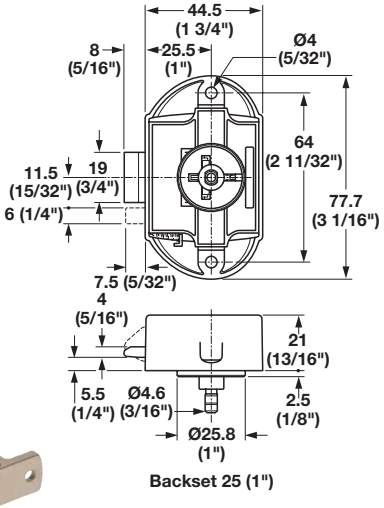

Backset 25 (1")

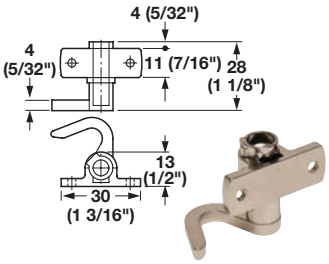

> Profile rod version
> For Ø6 mm (1/4") profile rod
> For left or right-hand door application
> 25 mm (1") backset
> Material: Plastic

Color	Item No.
nickel matt	225.22.603
brown	225.22.103

Supplied With
2 Catch hooks

Note
Profile rod locks come with a pair of color-coordinated catch hooks:
Matt nickel locks, plastic
Brown locks, plastic
Shim is used in conjunction with rosette for
19 mm (3/4") material – see next page
For 16 mm (5/8") material – use 1 pc. shim
For 13 mm (1/2") material – use 2 pcs. stacked together
Order push-button knobs and rosettes separately.

→ Shim

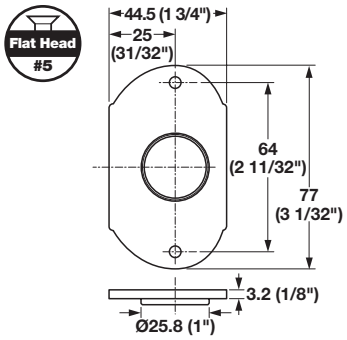

> Placed between lock and inside of door
> Eliminates the need for different rosette heights
> Material: Plastic

Color	Item No.
white	211.60.991

Rod, guides, locking bolts	page 10.35
Flat head screws	pages 12.7–12.8, 12.10, 12.13

Dimensional data not binding. Dimensions in mm, inches are approximate. We reserve the right to alter specifications without notice.

Push-Button Knobs and Rosettes

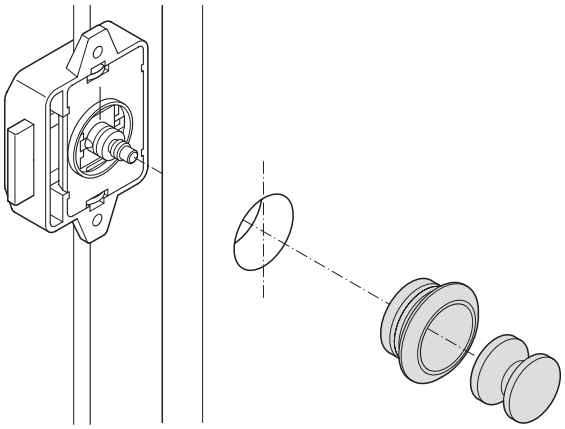

→ Push-button Knob

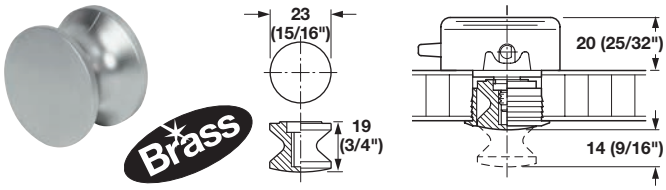

> Door thickness: 13–19 mm (1/2"–3/4")
> Material: Brass-plated, lacquered

Finish	Item No.
brass polished	229.10.820
chrome polished	229.10.220
nickel-plated matt	229.10.320
black nickel	229.10.620

→ Push-button Knob

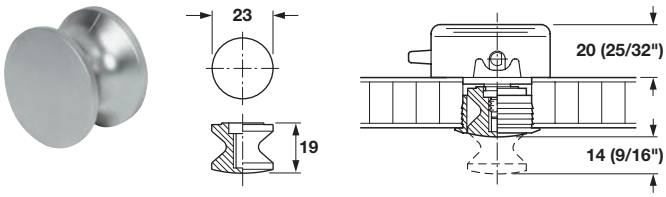

> Door thickness: 13–19 mm (1/2"–3/4")
> Material: Plastic, electro-plated

Color	Item No.
nickel-plated matt	229.01.677
brass-plated polished	229.01.873
chrome-plated polished	229.01.270

> Solid brass
> Meets 96 hour salt spray test
> Proper protection should be placed over rosettes before pounding in to prevent marring

→ Rosette, round

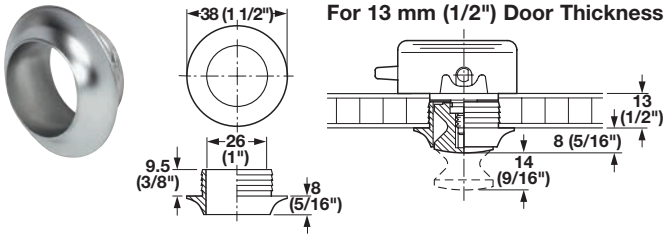

> Door thickness: 13, 16 or 19 mm (1/2", 5/8" or 3/4")
> Drill bit: 1"
> Material: Plastic, electro-plated

Finish	13 mm (1/2")	16 mm (5/8")	19 mm (3/4")
nickel-plated matt	229.03.608	229.03.617	229.03.626
chrome-plated polished	–	–	229.03.220

→ Rosette, round

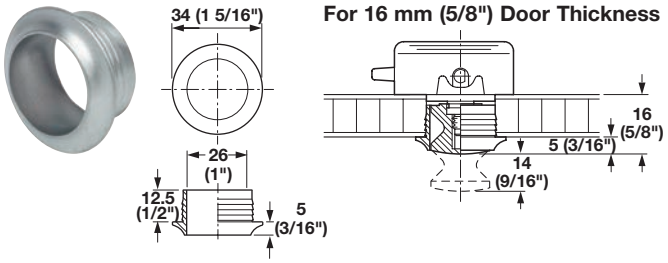

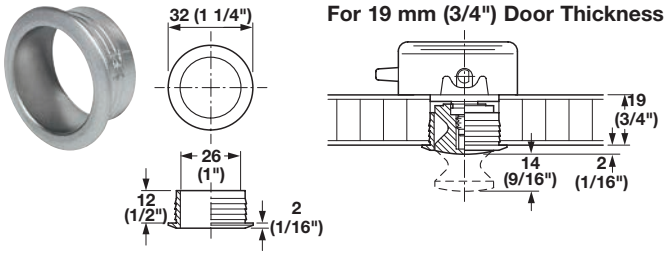

> Door thickness: 13, 16 or 19 mm (1/2", 5/8" or 3/4")
> Drill bit: 1"
> Material: Brass-plated, lacquered

Finish	13 mm (1/2")	16 mm (5/8")	19 mm (3/4")
brass polished	–	229.11.815	229.11.820
chrome polished	229.11.210	–	229.11.220
nickel-plated matt	–	229.11.315	229.11.320
black nickel	–	–	229.11.620

Shim page 10.57

Dimensional data not binding. Dimensions in mm, inches are approximate. We reserve the right to alter specifications without notice.

Mini Push-Button Knobs and Rosettes

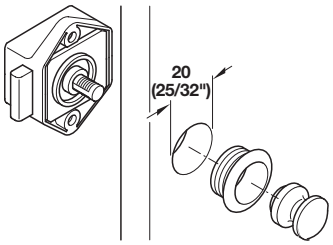

→ Push Lock

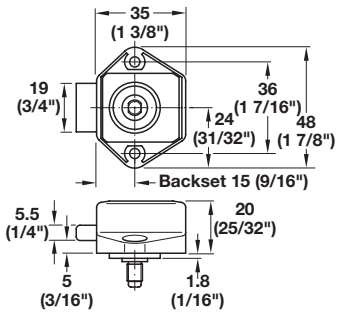

> Non-handed
> Backset: 15 mm (9/16")
> Material: Plastic

Color	Item No.
nickel-plated matt	211.61.606

Note
Order knobs and rosettes separately.

→ Knob and Rosette

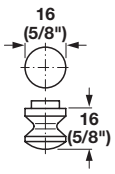

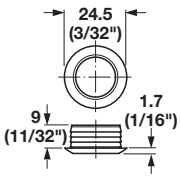

> Material thickness: 16 mm (5/8") only
> Material: Plastic; Finish: nickel-plated matt

Description	Item No.
Push-button knob	229.07.606
Rosette	229.09.600

Flat head screws pages 12.7–12.8, 12.10, 12.13

Dimensional data not binding. Dimensions in mm, inches are approximate. We reserve the right to alter specifications without notice.

whatlock®

→ Magnetic Lock System

> Door thickness: 16–25 mm (5/8"–1")
> Excellent for child protection
> The magnetic opener unlocks the latchbolt so that the door can be opened
> With adhesive strips
> Screw or glue mounted

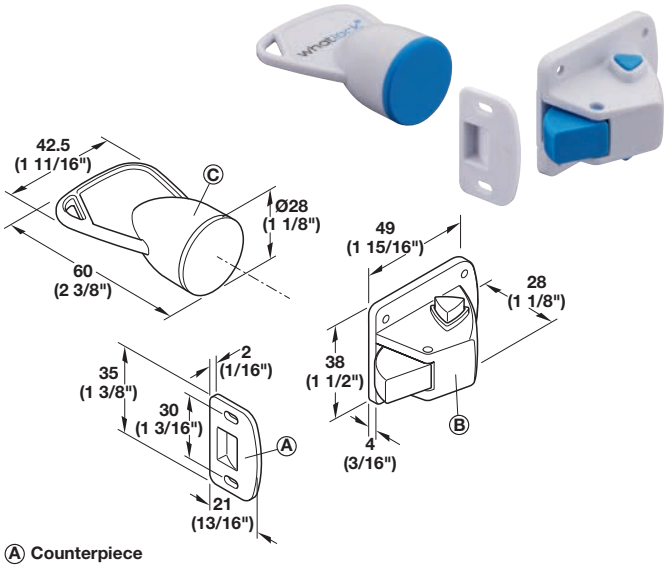

Ⓐ **Counterpiece**
Ⓑ **whatlock® magnetic lock system for doors**
Ⓒ **whatlock® magnet opener**

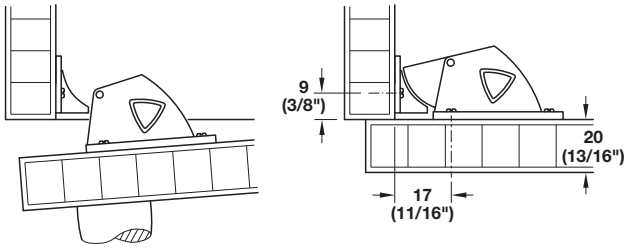

> Material: Plastic

Color	Item No.
white/blue	245.41.792

Supplied With
Latchbolt lock
Counterpiece
6 Ø3 mm chipboard screws

Functionality
The latchbolt is retracted and the door is opened with the Magnetic Opener. The latchbolt engages automatically when the door is closed securing the door.

→ Magnet opener

> Material: Plastic

Color	Item No.
white/blue	245.41.798

Dimensional data not binding. Dimensions in mm, inches are approximate. We reserve the right to alter specifications without notice.

Combination Locks – National Lock

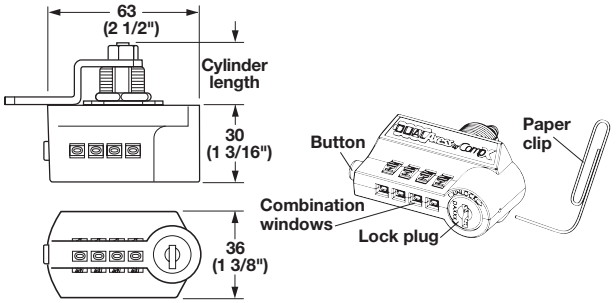

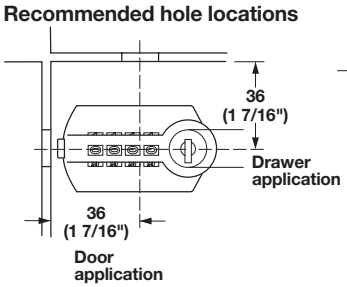

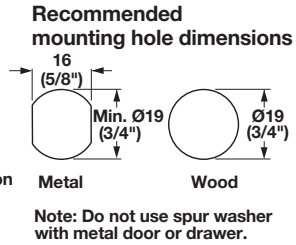

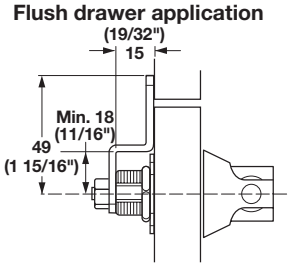

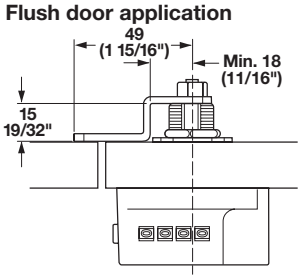

- > Open using either a combination or override key
- > Once unlocked, rotate the housing 90° clockwise to unlatch
- > Combination can only be changed with the override key and current combination
- > 10,000 possible combinations are available using any four-digit number
- > Replaces standard cam locks to allow keyless access using your own personal code
- > Retrofits into an existing 19 mm (3/4") hole
- > Mounts vertically or horizontally on flush, overlay, or lipped/overlay applications
- > Attach the provided cam for 90° latching in any direction

To unlock using combination:
Turn wheels until correct combination appears in the combination windows. Press button, and rotate housing to unlatch. Scramble wheels to lock.

To unlock using key:
Insert key into lock plug and rotate 90° clockwise. Rotate housing to unlatch. Important: Rotate key 90° counterclockwise to lock.

Changing the combination:
1. Set to correct combination.
2. Insert key and turn 90° clockwise to unlock.
3. Remove the key.
4. Insert the end of a large paper clip and push all the way in against the spring.
5. While pressing and holding the paper clip against the spring tension, spin the dials to the new code in the combination windows.
6. Remove paper clip and record the new combination.
7. Insert key and turn 90° counterclockwise.
8. Remove the key and press button to verify the new combination.

→ DualAxess Cam Lock

- > For right hand, left hand, or drawer applications
- > Cam travels 90° and can be re-oriented
- > Material: Lock housing: Die-cast; Cylinder: Brass

Cylinder length	National No.	Item No.
22 (7/8")	D8030-DA124	235.62.300
35 (1 3/8")	D8031-DA124	235.62.301

Supplied With
2 Keys
Straight cam
Offset cam
Spacer
Spur washer
Cylinder nut
2 Screws

Dimensional data not binding. Dimensions in mm, inches are approximate. We reserve the right to alter specifications without notice.

Combination Locks – Combi-Code Locks

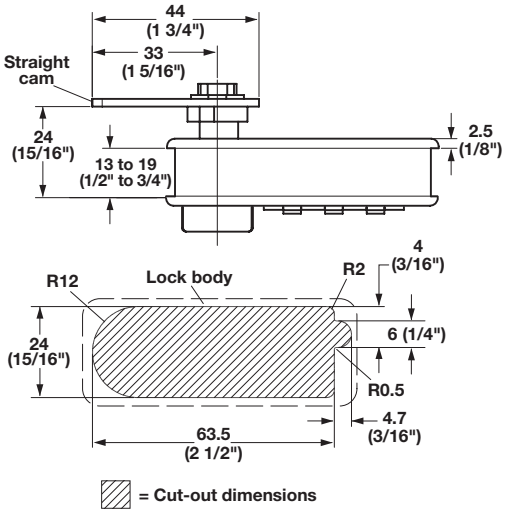

> 3 dial combination replaces the need for keys
> Private containers are secure with your own personal code
> The code can be changed and reset
> Available in horizontal or vertical orientation, with or without key override function
> With code scrambling and override key
> Cam travel is 180°, and can be re-oriented

Code Scrambling Feature:
After opening or closing the lock, the dials automatically scramble – no one can see the code.

Code Scrambling with Key Override:
After opening or closing the lock, the dials automatically scramble hiding the secret code. The overriding key opens the lock without having to know the code (if the code is forgotten). For instance, service people can open the locker to exchange towels, yet the code remains secret.

Each lock comes with instructions explaining how to set personal code.

For thin materials such as metal, glass, etc. please see back plate adapter below.

→ Lock 1157

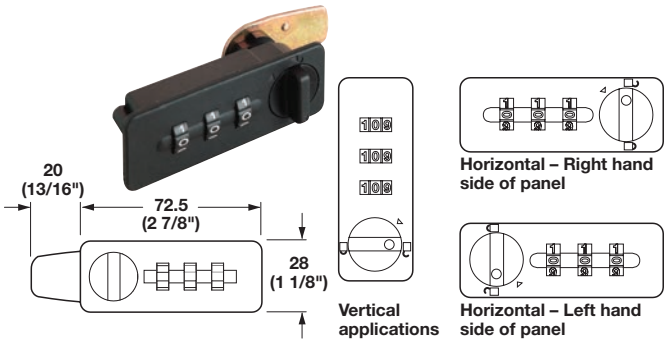

> Wood thickness: 13–19 mm (1/2"–3/4")
> Material: Polyamide glass fiber reinforced
> Polyamide; Color: black; Cam: Steel, galvanized

Orientation	Item No.
Horizontal – right	231.16.300
Horizontal – left	231.16.301
Vertical	231.16.302

Supplied With
Straight cam with snap ring for attaching cam
Back plate, 2 Mounting screws, Installation instructions

→ Lock 1153

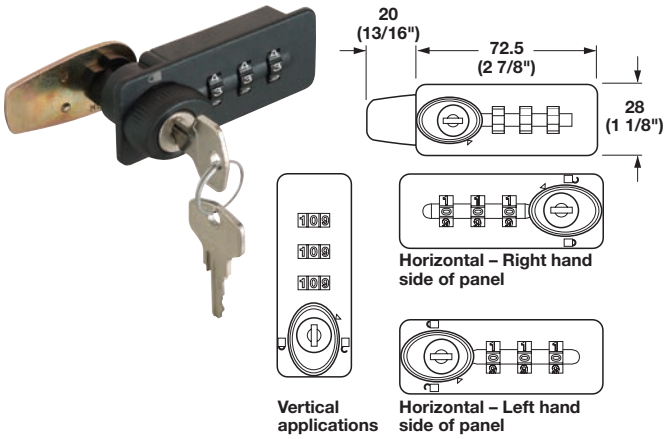

> Wood thickness: 13–19 mm (1/2"–3/4")
> Material: Polyamide glass fiber reinforced
Polyamide; Color: black; Cam: Steel, galvanized

Orientation	Item No.
Horizontal – right	231.16.310
Horizontal – left	231.16.311
Vertical	231.16.312

Supplied With
2 Keys, Straight cam with snap ring for attaching cam
Back plate, 2 Mounting screws, Installation instructions

→ Back Plate Adapter

> Used for installation in metal, glass, or plastic
> Material thickness: 1–9 mm (3/64"–3/8")
> Material: Polyamide glass fiber reinforced

Color	Item No.
black	231.16.399

→ Codefinder

> Small plate that can be inserted next to each combination wheel to detect lost code
> Material: Steel

Item No.
231.16.999

Dimensional data not binding. Dimensions in mm, inches are approximate. We reserve the right to alter specifications without notice.

Combination Locks – Mastercombi Locker Locks

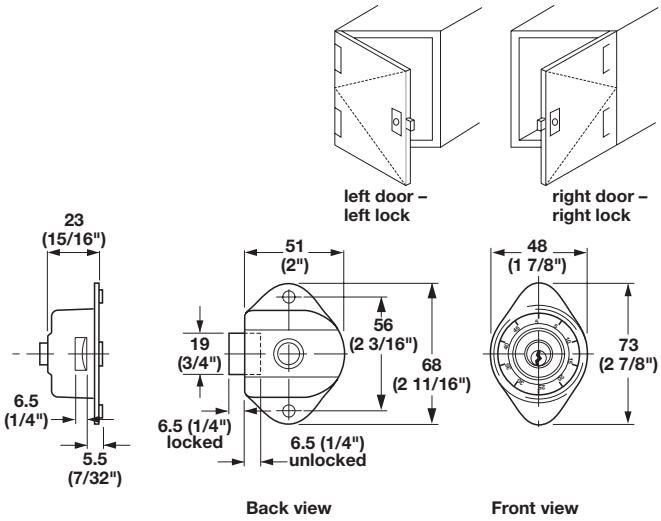

> Mastercombi combination locks are suitable for safe deposit boxes, wardrobes and lockers
> The rust-proof steel lock housing is theft-proof and sturdy
> A high security system as each lock comes with 5 different, pre-programmed, 3 digit number combinations
> Please order left or right lock per diagram

Note
Different combinations can not be chosen or programmed by end user. Control key is required to set a new combination (order separately).

Mastercombi for the installation in metal doors up to 3 mm (1/8") thick. For wood doors see extension set below.

→ Mastercombi Lock

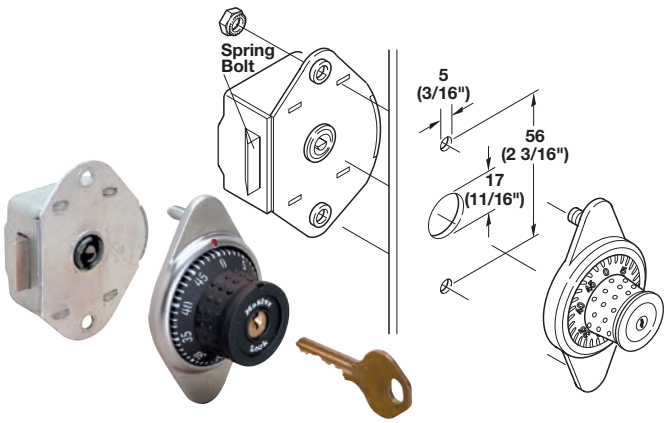

> With 5 different, pre-programmed safety combinations and control key function (order separately)
> With "easy grip and pull" handle
> With spring bolt
> Material: Lock housing: Steel, galvanized and chromatized
Housing cover: Stainless Steel, rust-proof
Rotary knob: Plastic; Color: black
Cylinder: Brass

Handing	Item No.
Left	231.13.055
Right	231.13.000

Supplied With
2 Nuts, 2 Integrated lock washers

→ Control Key for Mastercombi

> Order separately

	Item No.
	231.13.091

Strike plates page 10.54

→ Extension Set for Mastercombi

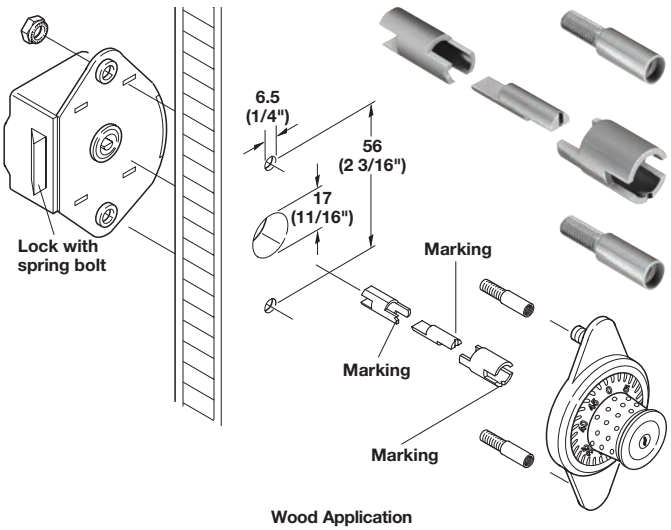

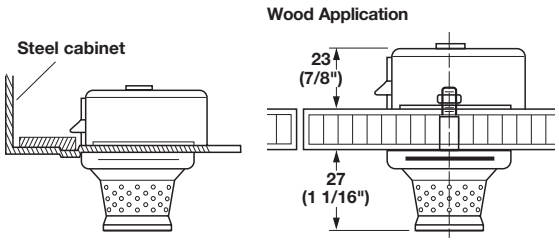

> Allows for installation in wood doors from 17.5–19 mm (11/16"–3/4") thick
> Material: Steel, galvanized and chromatized

	Item No.
	231.14.950

Supplied With
Locking pin
Cylinder pin
Driver extension
2 Screw extensions

Dimensional data not binding. Dimensions in mm, inches are approximate. We reserve the right to alter specifications without notice.

Combination Locks – Mastercombi Locker Locks

→ Special Strike Plate

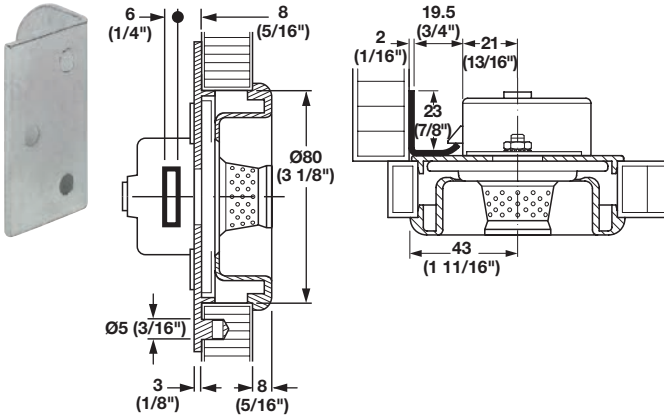

> For Mastercombi installations in wood doors
> Material: Steel

Finish	Item No.
nickel-plated	231.13.706

→ Setting a new combination on the Mastercombi

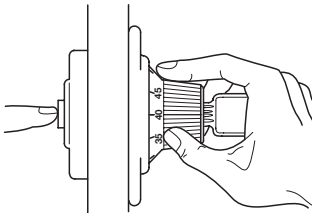

Turn the number dial at least one full turn clockwise, and then set "0" to the red mark. Insert control key and turn 90° clockwise. The spring bolt is now retracted and the door can be opened. Now depress and hold in the spring-loaded button on the rear of the lock housing. At the same time turn the number dial with the other hand 2 divisions clockwise to the "48" mark. Now release the spring-loaded button. Continue turning the dial clockwise until the adjusting spring can be heard to engage. The next combination is now set. Lock the cabinet door and withdraw the control key. Remember to register the new combination.

Dimensional data not binding. Dimensions in mm, inches are approximate. We reserve the right to alter specifications without notice.

SAFE-O-MAT® 500 Series – Card

Service+

Overlay Installation

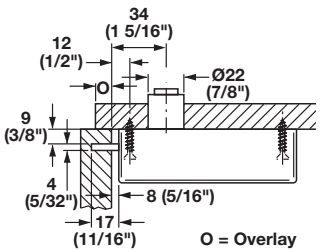

Inset Installation

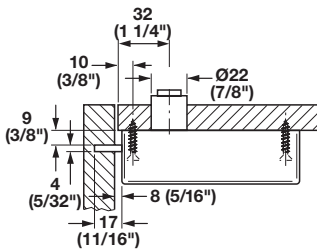

> For use on wood, laminate and plastic lockers

Areas of Application
> Fitness Centers, Medical Facilities, Hospitality

To Lock
1. Insert card into slot
2. Close door, turn key to extend bolt
3. Remove key

To Unlock
> Insert and turn key to retract bolt, card can be removed, key is again trapped.

Technical Data

L × H × W:	110 x 178 x 58 mm (4 5/16" × 7" × 2 1/4")
Weight:	350 g (12 oz.)
Temperature:	0°C + 60°C (32°F + 140°F)
Humidity:	10%–95% (non-condensing)

→ Card Lock

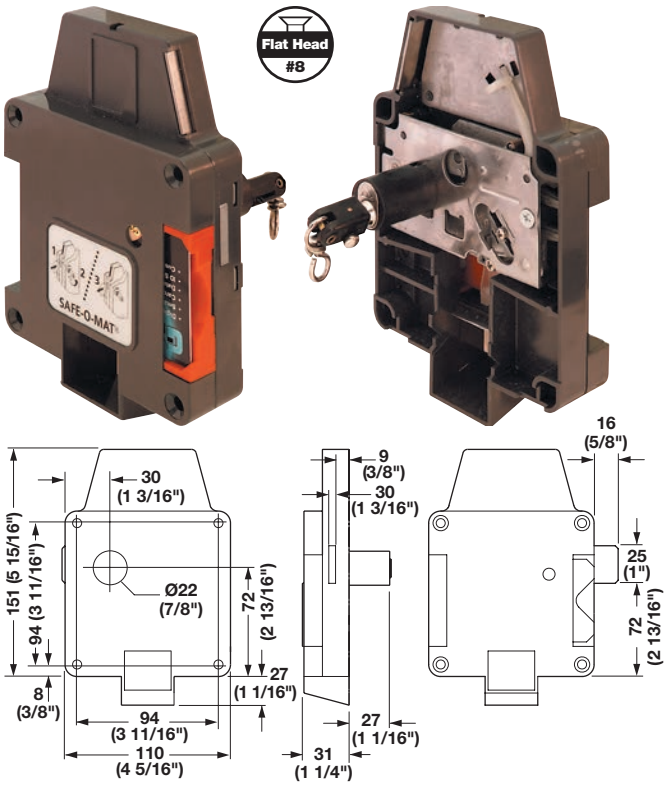

> Available in left hand and right hand orientations
> Material: Plastic; Color: gray

Handing	Item No.
Left	231.53.500
Right	231.53.501

Supplied With 4 Mounting screws, Outside instruction decal

Note
Facility can either provide their own card or order the ID cards listed below. Screw length depends on door thickness.

→ ID Card

> Punched for card lock 864 x 54 mm (3 3/8" × 2 1/8")
> Material: Plastic

Color	Item No.
white	917.44.066

Note
Please contact Häfele at 1-800-423-3531 and have the following information available: "Handing" specifications
Key Plan specifications

Every Order requires:
Cylinder change (removal) key, and 1 master key, sold separately

For all applicable Mounting/Programming Instructions and Specifications please visit **www.hafele.com**.

→ Card Punch

> Door thickness: 13–26 mm (1/2"–1")
> Cabinet width: min. 140 mm (5 1/2")
> Used by facility to punch a specific hole in membership cards for insertion into SAFE-O-MAT® 500 Card Lock
> Material: Steel

Finish	Item No.
chrome-plated	231.53.999

Note Membership cards not included.

Accessories page 10.70

→ Key and Core

Handing	Series	Item No.
Right	1	231.53.511
Right	2	231.53.512
Right	3	231.53.513
Left	1	231.53.611
Left	2	231.53.612
Left	3	231.53.613

Each Lock requires:
Cylinder core and user key, sold separately

Note
Other key series available your request.

Dimensional data not binding. Dimensions in mm, inches are approximate. We reserve the right to alter specifications without notice.

SAFE-O-MAT® 800 Series – Coin Return

Overlay Installation

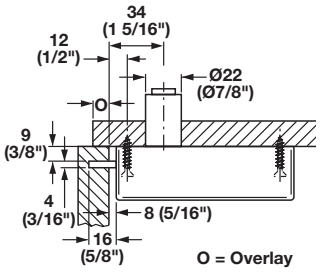

Inset Installation

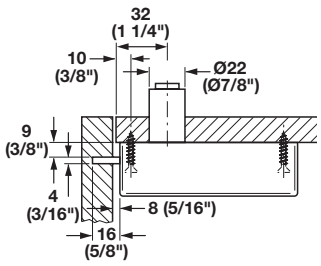

> For use on wood, laminate and plastic lockers

Areas of Application
> Fitness Centers, Amusement Parks, Resorts, Transportation Terminals

To Lock
1. Insert coin(s) into slot
2. Close door, turn key to extend bolt, coin(s) is temporarily retained
3. Remove key

To Unlock
Insert and turn key to retract bolt, coin is returned to Coin(s) Return Catch.

Technical Data

L × H × W:	110 x 119 x 57.5 mm (4 5/16" × 4 11/16" × 2 1/4")
Weight:	225 g (8 oz.)
Temperature:	0°–60°C (32°–140°F)
Humidity:	10%–95% (non-condensing)
Currency:	1 quarter, US, token

→ Coin Return Lock

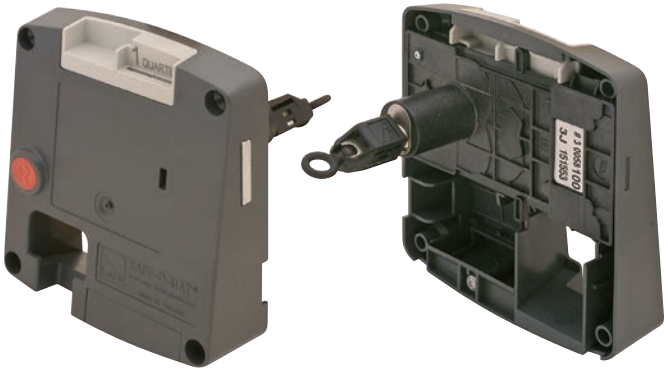

> Door thickness: 13–26 mm (1/2"–1")
> Cabinet width: min. 140 mm (5 1/2")
> Material: Plastic; Color: gray

Handing	Coin	Item No.
Left	1 quarter	231.53.810
Right	1 quarter	231.53.811
Right	1 token	231.53.817

Supplied With
4 Mounting screws
Outside instruction decal

Note
Screw length depends on door thickness.
Other currency or token locks available upon request.

Please contact Häfele at 1-800-423-3531 and have the following information available:
"Handing" specifications
Key Plan specifications

Every Order requires:
Cylinder change (removal) key, and 1 master key, sold separately

For all applicable Mounting/Programming Instructions and Specifications please visit **www.hafele.com**.For all applicable Mounting/Programming Instructions and Specifications please visit **www.hafele.com**.

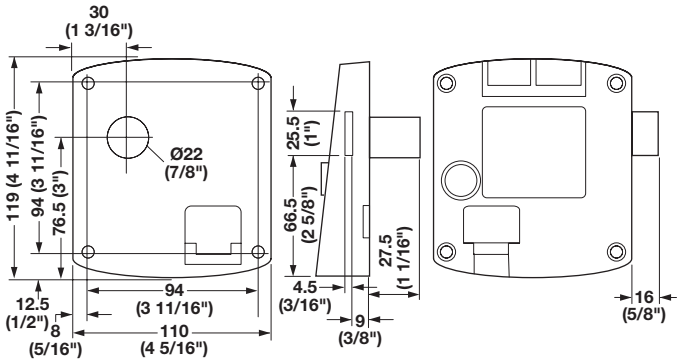

→ Key and Core

Handing	Series	Item No.
Right	1	231.53.511
Right	2	231.53.512
Right	3	231.53.513
Left	1	231.53.611
Left	2	231.53.612
Left	3	231.53.613

Each Lock requires:
Cylinder core and user key, sold separately

Note
Other key series available upon request.

Accessories page 10.70

Dimensional data not binding. Dimensions in mm, inches are approximate. We reserve the right to alter specifications without notice.

SAFE-O-MAT® 800 Series – Coin Collect

Overlay Installation

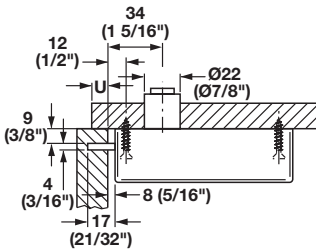

Inset Installation

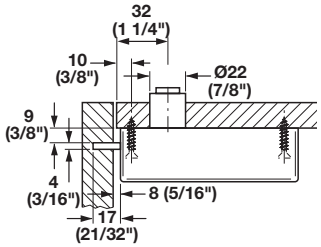

> For use on wood, laminate and plastic lockers

Areas of Application
> Fitness Centers, Amusement Parks, Resorts, Transportation Terminals

To Lock
1. Insert coin(s) into slot
2. Close door, turn key to extend bolt, coin(s) is temporarily retained
3. Remove key

To Unlock
Insert and turn key to retract bolt, coin(s) fall into Cash Box.

Technical Data

L × H × W:	110 × 175 × 58 mm (4 5/16" x 6 7/8" x 2 1/4")
Weight:	600 g (21 oz.)
Temperature:	0°–60°C (32°–140°F)
Humidity:	10% to 95% (non-condensing)
Currency:	1, 2 quarters, US, token
Cash box capacity:	40 quarters

Note
Other currency or token locks available upon request.

→ Coin Collect Lock

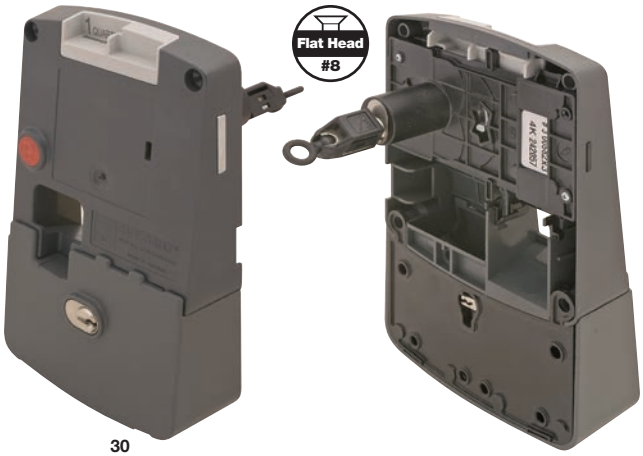

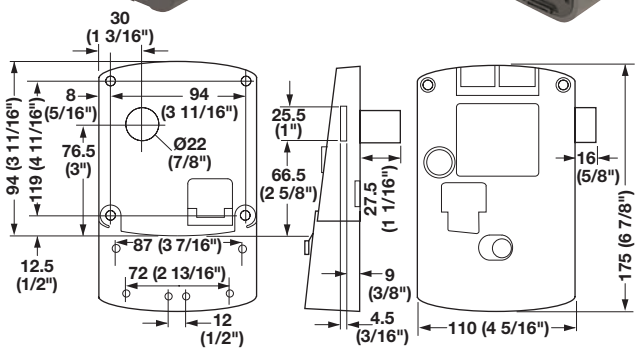

> Right hand orientation only
> For door thickness: 13–26 mm (1/2"–1")
> Minimum cabinet width: 140 mm (5 1/2")
> Material: Plastic; Cash box: Steel; Color: gray

Coin	Item No.
2 quarters	231.53.861
1 quarter	231.53.863
1 token	231.53.867

Supplied With
4 Mounting screws
Outside instruction decal per pc.

Note
Screw length depends on door thickness.
Please contact Häfele at 1-800-423-3531 and have the following information available:
"Handing" specifications
Key Plan specifications

Every order requires:
Cylinder change (removal) key, master key, cash box key, sold separately

For all applicable Mounting/Programming Instructions and Specifications please visit **www.hafele.com**.

→ Key and Core

> Right hand orientation only

Series	Item No.
1	231.53.511
2	231.53.512
3	231.53.513

Accessories page 10.70

→ Cash Box

> Right hand orientation only

Series	Item No.
1	231.53.981

Each Lock requires:
Cylinder core and user key, cash box, sold separately

Note
Other key series available upon request.

Dimensional data not binding. Dimensions in mm, inches are approximate. We reserve the right to alter specifications without notice.

SAFE-O-MAT® S-6 – Coin Return

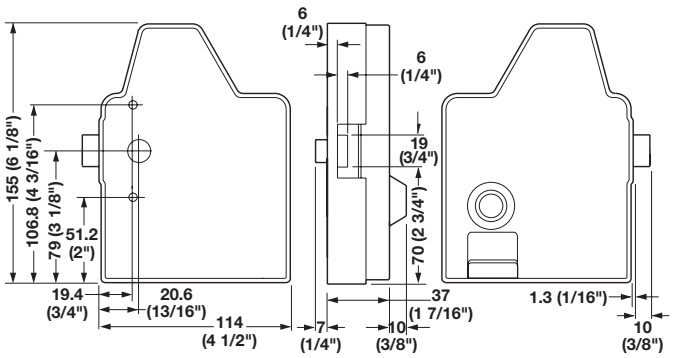

> For metal locker applications

Areas of Application
> Fitness Centers, Amusement Parks, Resorts, Sports Arenas, Transportation Terminals

To Lock
1. Insert coin(s) into slot
2. Close door, turn key to extend bolt, coin(s) is temporarily retained
3. Remove key

To Unlock
Insert and turn key to retract bolt, coin(s) are returned to Coin Return Catch.

Technical Data

L × H × W:	114 × 155 × 54 mm (4 1/2" x 6 1/8" x 2 1/8")
Weight:	650 g (1 lb. 7 oz.)
Temperature:	0°–60°C (32°–140°F)
Humidity:	10% to 95% (non-condensing)
Currency:	1, 2 quarters, US , token
Cash box capacity:	40 quarters

Note
Other currency or token locks available upon request.

→ Coin Return Lock

> For metal lockers
> Right hand orientation only
> Locks set to deadbolt function
> Material: Plastic; Color: gray

Coin	Series	Item No.
1 token	1	231.53.541
1 token	2	231.53.542
1 token	3	231.53.543
1 quarter	1	231.53.821
1 quarter	2	231.53.822
1 quarter	3	231.53.823
2 quarters	1	231.53.831
2 quarters	2	231.53.832
2 quarters	3	231.53.833

Supplied With
Mounting screws
Outside instruction decal

Note
Please contact Häfele at 1-800-423-3531 and have the following information available: Key Plan specifications

Every order requires: Master key, sold separately

For all applicable Mounting/Programming Instructions and Specifications please visit **www.hafele.com**.

Note
Other key series available upon request.

Accessories page 10.70

Dimensional data not binding. Dimensions in mm, inches are approximate. We reserve the right to alter specifications without notice.

SAFE-O-MAT® S-6 – Coin Collect

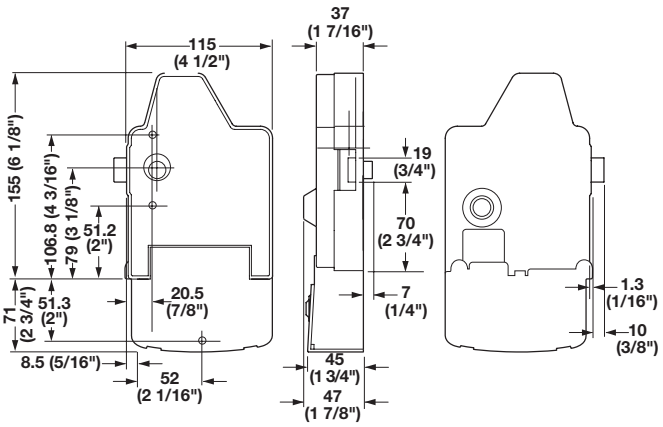

> For metal locker applications

Areas of Application
> Fitness Centers, Amusement Parks, Resorts, Sports Arenas, Transportation Terminals

To Lock
1. Insert coin(s) into slot
2. Close door, turn key to extend bolt, coin(s) are retained
3. Remove key

To Unlock
Insert and turn key to retract bolt, coin(s) fall into Cash Box.

Technical Data

L × H × W:	115 × 226 × 54 mm (4 1/2" × 8 7/8" × 2 1/8")
Weight:	1200 g (2 lbs. 10 oz.)
Temperature:	0°–60°C (32°–140°F)
Humidity:	10% to 95% (non-condensing)
Currency:	1, 2 quarters, US, token
Cash box capacity:	40 quarters

Note
Other currency or token locks available upon request.

→ Coin Collect Lock

> For metal lockers
> Right hand orientation only
> Locks set to deadbolt function
> Material: Plastic; Color: gray; Cash box: Steel

Coin	Series	Item No.
1 token	1	231.53.591
1 token	2	231.53.592
1 token	3	231.53.593
1 quarter	1	231.53.871
1 quarter	2	231.53.872
1 quarter	3	231.53.873
2 quarters	1	231.53.881
2 quarters	2	231.53.882
2 quarters	3	231.53.883

Supplied With
3 Mounting screws
Outside instruction decal

Note
Please contact Häfele at 1-800-423-3531 and have the following information available: Key Plan specifications

Every order requires: Master key, 1 cash box key, sold separately

For all applicable Mounting/Programming Instructions and Specifications please visit **www.hafele.com**.

→ Cash Box

> Right hand orientation only

Series	Item No.
1	231.53.971
2	231.53.972
3	231.53.973

Each Lock requires: Cylinder core and user key, included
Cash box, sold separately

Note
Other key series available upon request.

Accessories page 10.70

Dimensional data not binding. Dimensions in mm, inches are approximate. We reserve the right to alter specifications without notice.

SAFE-O-MAT® – Accessories

→ Torx® #20 Security Screwdriver

> For use with special Torx® security screws
> Material: Steel; Handle: Plastic

Color	Item No.
red/black	231.49.920

→ Key Number Set

> For use with SAFE-O-MAT®
> Inserted into user keys
> W x D x H: 145 × 135 × 7 mm (5 11/16" × 5 5/16" × 1/4")
> Material: Plastic; Color: white

Numbers	Item No.
1–50	231.53.940
50–99	231.53.941

→ Bit Screwdriver Set

> For use with special Torx® security screws
> Material: Steel; Handle: Plastic

Color	Item No.
black	006.40.387

Supplied With
Black canvas pouch
Driver
Magnetic bit holder
Extension bit holder
8 Bits

→ SAFE-O-MAT Token

> For use with all SAFE-O-MAT® token locks
> Ø26 mm (1 1/16")
> Material: Brass, polished

	Item No.
	231.53.998

→ Locker Number Decal

> Use with SAFE-O-MAT® wood, laminate & plastic locks
> Self-adhesive applied
> W x D x H: 60 × 115 mm (2 3/8" x 4 1/2")
> Material: Plastic; Color: gray

Lock	Item No.
Blank	231.53.952
With numbers	231.53.953

Note
Please specify numbering when ordering.

Dimensional data not binding. Dimensions in mm, inches are approximate. We reserve the right to alter specifications without notice.

Electric and Electronic Cabinet Locking Systems

Battery Powered Devices

> For cabinet doors and drawers or room doors combine programming, control devices and locking devices in a standalone unit
> RF Pin Code devices
> Pin Code devices: With fixed and changeable codes
Master codes or master keys for emergency or management access
> Locks using RFID credentials as keys
> Locks combining Pin Code and RFID options: Cabinet locks - often used for lockers and casework

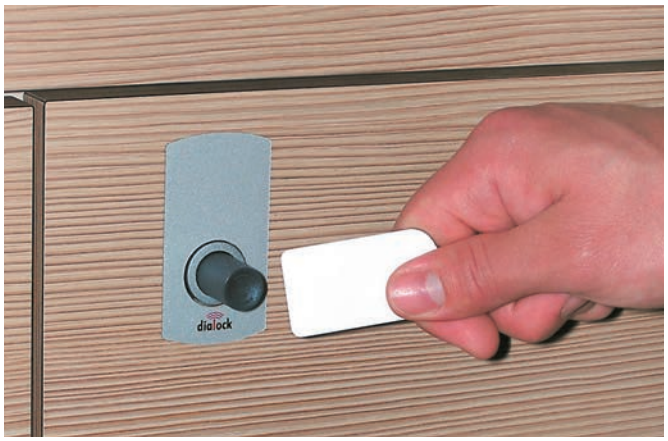

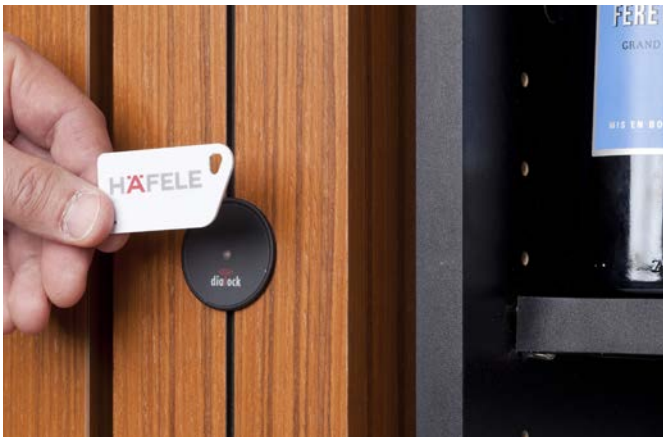

Dimensional data not binding. Dimensions in mm, inches are approximate. We reserve the right to alter specifications without notice.

StealthLock - Battery Powered Electronic Locking Systems

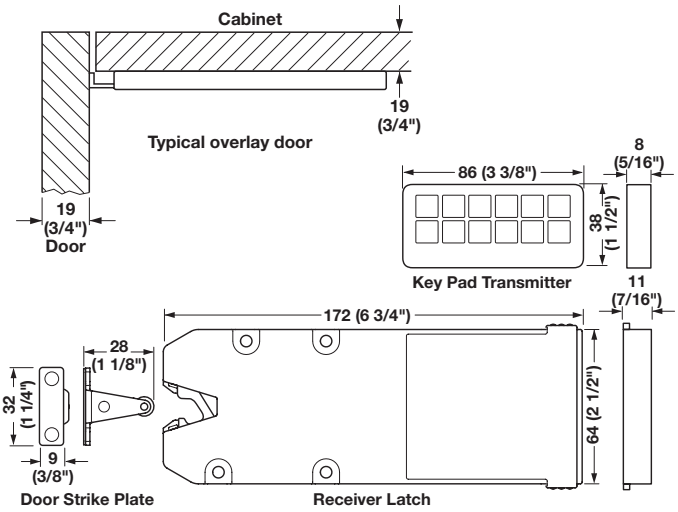

> StealthLock electrically controls cabinet doors and drawers.
> It operates in passage or cycle modes, and is released with an RF controlled key pad transmitter.

Features
> One key pad transmitter can activate an unlimited number of locks within a 4.5 m (15 ft.) range
> Lock powered by 4–AAA batteries (not included)
> Low battery indicator on key pad transmitter and lock
> Meets ANSI/BIFMA 50 lbf. pull strength specifications
> Slim design mounts in 1/2" drawer suspension clearance
> For left or right hand operation
> Toggle lock or timed unlock delay

Areas of Application
> For interior use
> For installation in wood, laminate or plastic cabinets and drawers

Technical Data:

Tensile load limit:	445 N. (100 lbf.)
Environmental:	Operating temperature: 10°–49° C (50°–120° F) Humidity (operating): 95%
Electrical:	Supply voltage: 6 VDC (4 - AAA batteries, sold seperately) Connections: Battery pack, self-contained Battery Life: 4000 lock cycles
Standards Compliance:	FCC

Solutions Available
> Standard: For most general office or residential applications.*
> Dedicated: For projects; Ideal for assigned lockers and fitness lockers.**

Modes Available – Both Solutions
> Self-Lock Mode (Cycle)
> Passage/Manual Lock Mode (toggle)
> Single Use Mode (day use)

→ Battery Powered RF Cabinet Lock Set

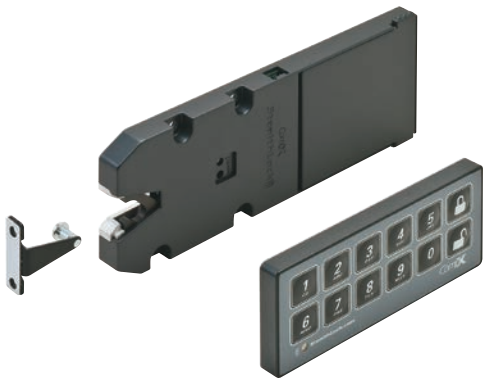

> Material: Receiver, Latch and Key Pad: Plastic
Door Strike Plate: Steel

Color	Item No.
black	237.56.350

Supplied With
Installation tool
Mounting screws
Instructions

→ StealthLock-Loox Power Cord

> Material: Plastic
Color: black/red/gray

Length	Item No.
1524 (60")	237.56.380
3048 (120")	237.56.381

→ Battery Powered RF Cabinet Lock with Strike Plate

> Material: Receiver and Latch: Plastic
Door Strike Plate: Steel; Color: black

Color	Item No.
gray	237.56.352

Supplied With
Mounting screws

Note
Programming cabinet lock 237.56.352 with dedicated key pad 237.56.171 will link or "marry" key pad and lock together for dedicated use.

Dimensional data not binding. Dimensions in mm, inches are approximate. We reserve the right to alter specifications without notice.

StealthLock Accessories - Battery Powered Electronic Locking Systems

→ Additional Door Strike Plate

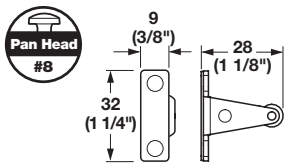

> Material: Steel

Color	Item No.
black	237.56.988

→ Additional Installation Tool

> Material: Plastic

Color	Item No.
red	237.56.992

→ Drywall Mounting Plate

> Allows mounting to any flat surface or wall
> Material: Aluminum

Finish	Item No.
satin nickel	237.56.974

Supplied With
Mounting screws

→ Battery, Size AAA, 1.5V

Color	Item No.
black/gray	910.54.953

Supplied With
4 pcs.

→ Key Pad Transmitter

> Material: Plastic; Color: black

Version	Item No.
*Standard	237.56.170
**Dedicated	237.56.171

Supplied With
CR2032 coin battery

→ Key Pad Mounting Plate

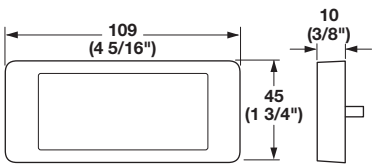

> Material: Aluminum

Color	Item No.
gray	237.56.994

Note
Customized, pre-programmed locking systems available upon request.

→ Power Supply

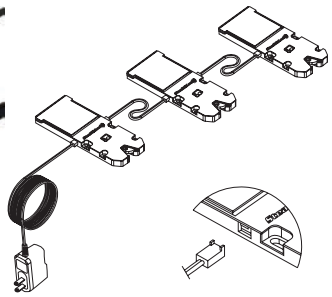

> Voltage: 7.5VDC
> Amperage: 1.5A
> For use with StealthLock
> Powered solution for StealthLock locking system
> Material: Plastic; Color: black

Length	Item No.
1676 (66")	237.56.995

Note
Connects receiver latch to 120 VAC power.
One power supply can support/power 10 locks.

→ Battery Power Cord

> For 9V Battery power back up
> Material: Plastic; Color: black/red

Length	Item No.
3048 (120")	237.56.999

→ Power Extension Cord

> Material: Plastic; Color: black/red

Length	Item No.
914 (36")	237.56.996
1524 (60")	237.56.997
3048 (120")	237.56.998

Pan head screws pages 12.9–12.10

Dimensional data not binding. Dimensions in mm, inches are approximate. We reserve the right to alter specifications without notice.

RegulatoR® Battery Powered Electronic Locking System

→ Regulator Keypad Lock

Manual Lock

Self Lock

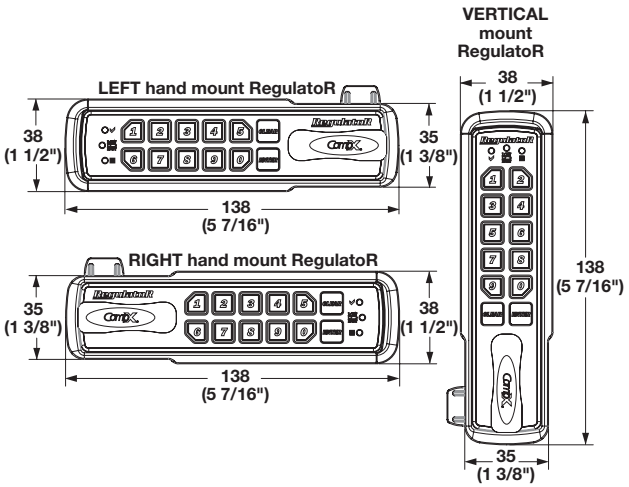

> Cylinder length: 30 mm (1 3/16")
> Material: Lock body: Aluminum; Color: gray
Face plate: Plastic; Cam: Steel / Plastic

Lock orientation	Handing	Manual lock	Self-lock
Horizontal, lever on left	RH	231.97.003	231.97.103
Horizontal, lever on right	LH	231.97.013	231.97.113
Vertical, lever on bottom	RH/LH	231.97.053	231.97.153

Supplied with
1 Straight cam, 1 Offset cam or 1 SlamCAM
Jamb nut
4 Screws
Washer
Mounting Instruction
2-AA batteries

Cylinder length	Max. material thickness
11 (7/16")	3 (1/8")
30 (1 3/16")	21 (7/8")
45 (1 3/4")	36 (1 7/16")

Note
Other models available upon request.

> CompX RegulatoR is a lock used to electrically control cabinet doors, drawers and lockers
> Depending on the model, this lock operates in an assigned use or in a single use mode
> The lock is electrically released with a correct PIN code entered on the keypad

Applications
> Cabinet doors or drawers
> Lockers
> Storage enclosures
> File cabinets
> Computer server racks

Markets
> Healthcare
> Schools/universities
> Laboratory
> Office furniture
> Retail displays

Features - Self-locking
> Self-locking, featuring SlamCAM
> Spacers provide additional latching dimensions
> 50,000 cycles
> Convenient external battery installation/removal
> Low battery indicator
> Easy to clean membrane keypad
> 19 user codes and 1 supervisor code
> Lock complies with ADA standards for door locks
> Lock is easily programmed by user with easy to use keypad
> Lock mounts vertically for raised panel doors
> Designed to pass the ANSI/BIFMA 50 lbf. pull strength
> Assigned use mode only

Features - Manual locking
> 50,000 cycles
> Convenient external battery installation/removal
> Low battery indicator
> Uses existing CompX National cams with FlexaCam
> Single use mode, or assigned use mode
> Easy to clean membrane keypad
> 19 user codes and 1 supervisor code
> Lock complies with ADA standards for door locks
> Lock is easily programmed by user with easy to use keypad
> Lock mounts vertically for raised panel doors
> Designed to pass the ANSI/BIFMA 50 lbf. pull strength

Specifications
> Long battery life (10 lock cycles per day for four years)
> Easy installation with only two drill points
> For left and right hand operation

Areas of Application
> Suitable for interior use
> Installation in wood, laminate, plastic and metal doors and drawers

Operating Modes
> Single Use Mode
(Manual Locking only): Allows the user to choose their code at time of operation
Recommended for shared lockers or cabinets in a typical fitness locker room application
> Assigned Use Mode
(Manual Locking and Self-Locking): Allows for group access to the lock

Dimensional data not binding. Dimensions in mm, inches are approximate. We reserve the right to alter specifications without notice.

SAFE-O-TRONIC® Battery Powered Electronic Locking Systems

→ LS 150 Keypad Lock

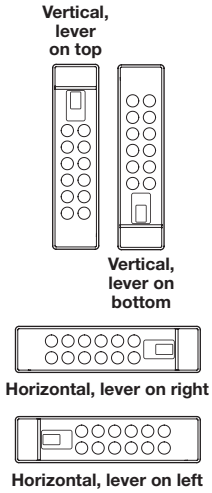

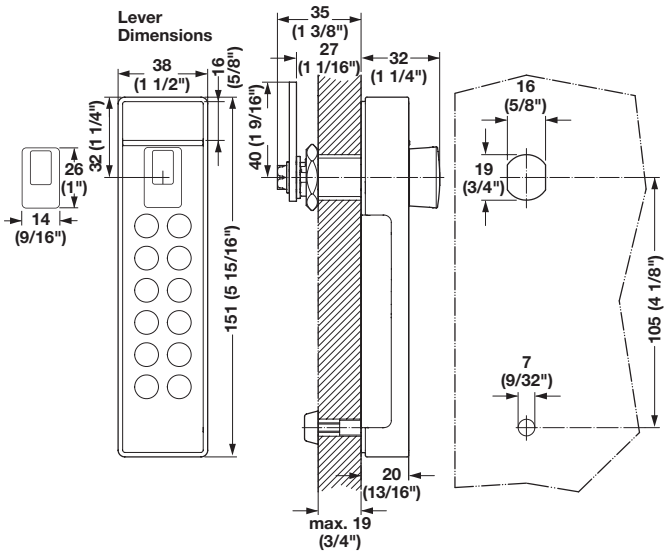

> SAFE-O-TRONIC® access LS 150 is a lock used to electrically control cabinet doors, drawers and lockers
> This lock operates in a day use or fixed mode
> Lock is electrically released with a correct PIN code entered on the keypad.

Features
> Lock complies with ADA standards for door locks
> Lock is programmed with RFID FOBs for set up and emergency opening
> Lock is easily programmed by user with easy to use keypad
> Lock mounts vertically for raised panel doors
> Lock powered by a 3-AAA battery, included 231.98.210
> Low battery indicator via external LEDs
> Designed to pass the ANSI/BIFMA 50 lbf. pull strength specification
> Long battery life (10 lock cycles per day for four years)
> Easy installation with only two drill points
> For left hand and right hand operation
> One programming key set required for project

Areas of Application
> Suitable for interior use
> Suitable for installation in wood, laminate, plastic and metal doors and drawers

Operating Modes
> Day Use Mode: Allows the user to choose their code at time of operation
Recommended for shared lockers or cabinets in a typical fitness locker room application
> Fixed Use Mode: Allows management to set user codes
99 user codes per lock possible
Assigned locker applications

Technical Data

Tensile load limit:	1000 N. (225 lbf.)
Environmental:	Operating temp.: -10°–65° C (14º–150º F) Humidity (operating): 0–90%, non-condensing Protection: IP 43
Electrical:	Supply voltage: 4.5 VDC Connections: Battery pack, self-contained Battery Life: 32,000 lock cycles
Standards Compliance:	CE

Note
LS 150 programming key set required for programming and master key operation (see below).

> Material: Lock body: Aluminum; Color: gray
Face plate: Plastic; Color: black; Cam: Steel

Lock orientation	Handing	Item No.
Vertical, lever on top	RH/LH	231.98.090
Vertical, lever on bottom	RH/LH	231.98.091
Horizontal, lever on left	RH	231.98.092
Horizontal, lever on right	LH	231.98.093

Supplied With
Nut
Straight cam
Mounting screw
Spacers
Instructions
3-AAA battery pack

Note
Batteries changed with Torx™ Screw Driver (sold separately, Item no. 231.99.909).

→ LS 150 Programming Key Set

> Material: Plastic

Color	Item No.
black	231.98.511

Dimensional data not binding. Dimensions in mm, inches are approximate. We reserve the right to alter specifications without notice.

SAFE-O-TRONIC® Battery Powered Electronic Locking Systems

→ LS 200 Keypad Lock

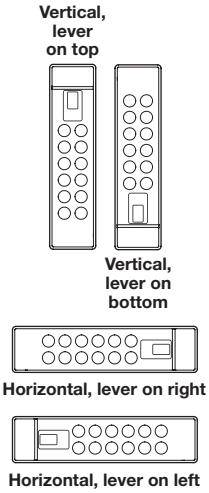

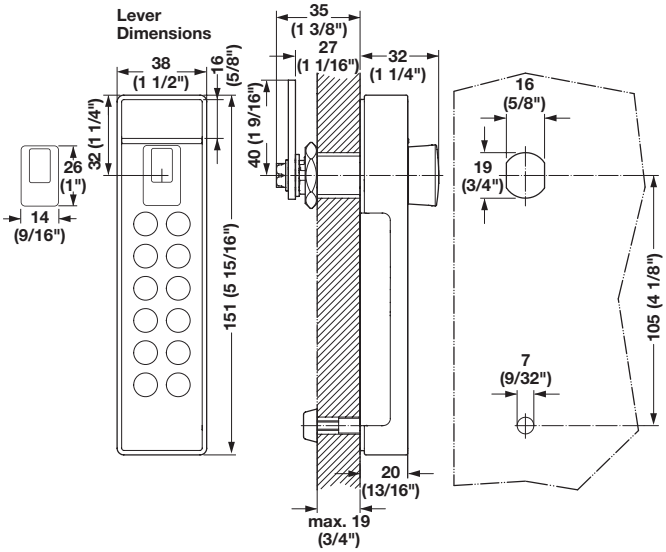

> SAFE-O-TRONIC® access LS 200 is a lock used to electrically control cabinet doors, drawers and lockers
> This lock operates in a day use or fixed mode
> Lock is electrically released with a correct PIN code entered on the keypad.

Features
> Lock complies with ADA standards for door locks
> Lock is programmed with RFID FOBs for set up and emergency opening
> Lock is easily programmed by user with easy to use keypad
> Lock mounts vertically for raised panel doors
> Lock powered by a 3-AAA battery pack, included 231.98.210
> Low battery indicator via external LEDs
> Designed to pass the ANSI/BIFMA 50 lbf. pull strength specification
> Long battery life (10 lock cycles per day for four years)
> Easy installation with only two drill points
> For left hand and right hand operation
> One programming key set required for project

Areas of Application
> Suitable for interior use
> Suitable for installation in wood, laminate, plastic and metal doors and drawers

Operating Modes
> Day Use Mode: Allows the user to choose their code at time of operation
Recommended for shared lockers or cabinets in a typical fitness locker room application
> Fixed Use Mode: Allows management to set user codes
99 user codes per lock possible
Assigned locker applications

Technical Data

Tensile load limit:	1000 N. (225 lbf.)
Environmental:	Operating temp.: -10°–65° C (14º–150º F)
	Humidity (operating): 0–90%, non-condensing
	Protection: IP 43
Electrical:	Supply voltage: 4.5 VDC
	Connections: Battery pack, self-contained
	Battery Life: 32,000 lock cycles
Standards Compliance:	CE

Note
LS 200 programming key set required for programming and master key operation (see below).

> Material: Lock body: Aluminum; Color: gray
Face plate: Plastic; Cam: Steel

Lock orientation	Handing	black	white
Vertical, lever on top	RH/LH	231.98.010	231.98.015
Vertical, lever on bottom	RH/LH	231.98.011	231.98.016
Horizontal, lever on left	RH	231.98.012	231.98.017
Horizontal, lever on right	LH	231.98.013	231.98.018

Supplied With
Nut
Straight cam
Mounting screw
Spacers
Instructions
3-AAA battery pack

Note
Batteries changed with Torx™ Screw Driver (sold separately, Item no. 231.99.909).

→ LS 200 Programming Key Set

> Material: Plastic

Color	Item No.
black	231.98.508

Dimensional data not binding. Dimensions in mm, inches are approximate. We reserve the right to alter specifications without notice.

PIN Code Lock

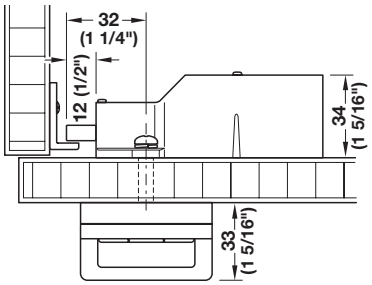

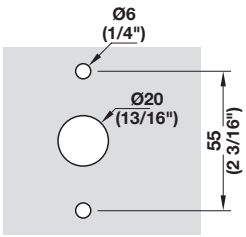

> Advanced security
> For wood doors
> Keypad for code entry
> ADA compliant with integrated handle
> With sockeat for master or programming key
> Visual and acoustic occupancy indicators with low battery alarm
> Choice of locking with individually selected code or permanently assigned code
> Door thickness: 17.5–21.7 mm (11/16"–7/8")
> For left or right hand use
> Surface mounted through drilled holes

→ Deadbolt or Latchbolt Lock with Keypad

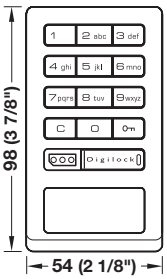

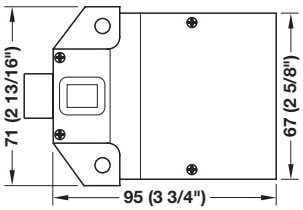

> L x W x H: 98 x 54 x 33 mm (3 7/8" x 2 1/8" x 1 5/16")
> Material: Keypad: Zinc Alloy; Finish: bright nickel
> Keys: Plastic; Housing: Steel; Color: black

Function	Item No.
Deadbolt - day use	231.98.111
Latchbolt - assigned use	231.98.110

Supplied With
Keypad, Lock, 4 AA batteries, Mounting screws, Instructions

Note
At least one programming key is required for initial programing/start-up.

→ Right Angle Strike Plate

	Item No.
	231.98.140

Digilock®
Safe and Sound™

Dimensional data not binding. Dimensions in mm, inches are approximate. We reserve the right to alter specifications without notice.

Accessories

→ Master Key

> Plugs into lock
> Allows access for forgotten codes or a lost master key
> Emergency power supply when batteries are low
> L x W x H: 121 x 36 x 21 mm (4 3/4" x 1 7/16" x 13/16")
> Material: Plastic

Color	Item No.
black	231.98.119

→ Programming Key

> Plugs into lock
> Trains up to 10 master keys
> Allows access for forgotten codes or a lost master key
> Emergency power supply when batteries are low
> L x W x H: 121 x 36 x 21 mm (4 3/4" x 1 7/16" x 13/16")
> Material: Plastic

Color	Item No.
yellow	231.98.118

→ Extension Set

> Press-fit
> For door thicknesses 20–25.4 mm (13/16"–1")
> L x W x H: 4 x 18 x 2 mm (3/16" x 11/16" x 3/32")
> Material: Pins: Steel; Color: silver color; Housing: Plastic

Color	Item No.
black	231.98.117

→ User Key

> Plugs into lock
> Allows access in place of pin code
> L x W x H: 121 x 36 x 21 mm (4 3/4" x 1 7/16" x 13/16")
> Material: Plastic

Color	Item No.
blue	231.98.116

Dimensional data not binding. Dimensions in mm, inches are approximate. We reserve the right to alter specifications without notice.

LockerLock LL 200

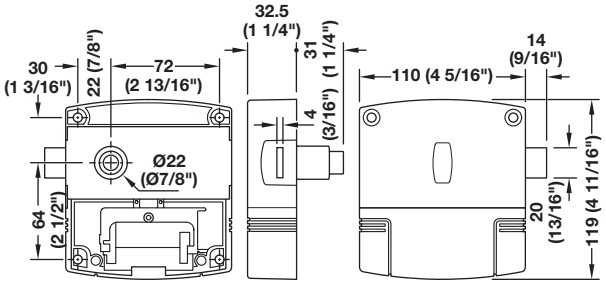

- For use with PK programming key card, PK clearing key card, KT key tag or KB key wristband
- Can be programmed in Stand-Alone mode with PK programming card and PK clearing key card or with MDU 110/software
- Three free choice of locker versions are available can be programmed during start-up using the software or MDU 110
- One or several Dialock keys (optional) are allocated to one or several lockers (optional) for locking and unlocking
- The maintenance tool is required to open the battery compartment
- The type-specific discharge behavior (considerable voltage drop at the end of the life time) of lithium batteries may cause that a low battery is indicated at the terminal only for a short period or not at all
- The PK programming key card and PK clearing key card can be used for emergency opening
- Mifare Classic, Mifare DESfire EV2, Tag-it ISO

Area of application

- Battery-operated, intelligent locker lock for indoor use: For wood or HPL doors on wardrobes, lockers and cabinets

Version

- Factory settings for right doors, can be adapted to left doors, batteries theft-proof, **magnetic interactions cannot take place**, integrated real-time clock for audit trail of all processes, acoustic feedback for unlocking and locking, programming/data transfer with MDU via RFID interface

Functionality

- "Fixed allocation" function, battery monitor: As soon as the battery change is indicated, the locker can still be unlocked, but not locked again, emergency opening possible with master key

Technical Data

Degree of protection:	IP20
Ambient temperature:	0–50 °C
Relative humidity:	10–90% (not condensed)
Number of possible Dialock keys:	Up to 1000
Number of audit trail entries:	1000
Batteries (4 pcs.):	AA 1.5 V type E91
Battery service life:	Approx. 50000 locking and unlocking processes

LockerLock LL 200

- For door width: With butting overlay door: min. 140 mm (5 1/2"), with butting inset door: min. 305 mm (12") (sample measurements, exact dimensions depend on the hinge)
- For door thickness: 13–19 mm (1/2"–3/4")
- Material: Plastic

Finish	Item No.
anthracite	231.91.000

Dimensional data not binding. Dimensions in mm, inches are approximate. We reserve the right to alter specifications without notice.

LockerLock LL 200

→ Maintenance Tool

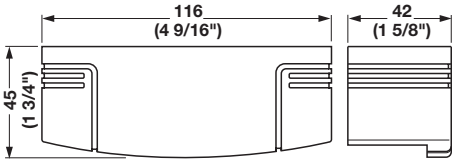

> For opening the battery cover of LockerLock
> Material: Plastic

Color	Item No.
anthracite	231.80.100

→ LockerLock Operating Instructions

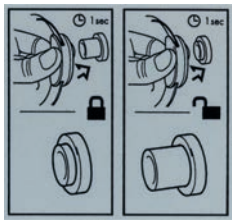

> Screw mounted
> Material: Steel

Finish	Item No.
nickel-plated	231.81.200

→ Number Plate, Neutral

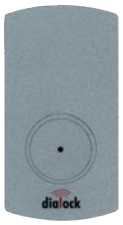

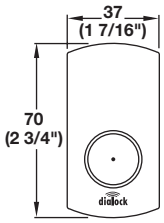

> To identify lockers where LockerLock is used
> For sticking onto doors
> Self-adhesive
> Dimensions: 70 x 37 mm (2 3/4" x 1 7/16")
> Drill hole Ø: 22.3 mm (7/8")
> Material: Plastic

Finish	Item No.
silver colored	231.81.100

→ Battery, 1.5 V AA

> Operating temperature: –18 to +55 °C
> with alkaline-manganese

	Item No.
	910.54.980

Dimensional data not binding. Dimensions in mm, inches are approximate. We reserve the right to alter specifications without notice.

LockerLock LL 200

→ Green Programming Add Key Tag

Item No.
917.42.003

→ Red Programming Delete Key Tag

Item No.
917.42.004

→ Gray User Key Tag

Item No.
917.44.085

→ Single Sleeves

> M4 internal thread
> Drill hole Ø: 8 mm (5/16")
> Eternal thread Ø: 8.5 mm (5/16")
> Material: Plastic; Color: natural

Length L	Item No.
8 (5/16")	039.33.140
10 (3/8")	039.33.042

→ Angled Striking Plate

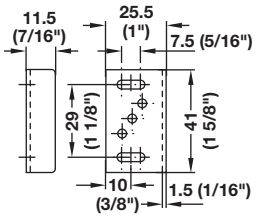

> Slot for different bolt distances
> Screw mounted
> Material: Steel

Finish	Item No.
nickel-plated	239.47.604

Dimensional data not binding. Dimensions in mm, inches are approximate. We reserve the right to alter specifications without notice.

EFL 50 Furniture Lock/ EFL 51 Furniture Lock

→ Installation

Hinged door

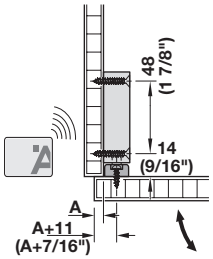

In order to open, the transponder card must be held against the side of the cabinet.

Hinged Door with push-to-open function

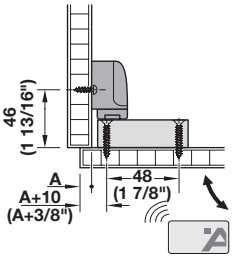

In order to unlock, the transponder card must be held against the hinged door.

Sliding Door

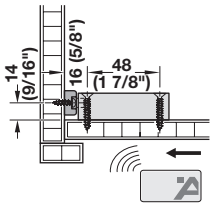

In order to unlock, the transponder card must be held against the sliding door.

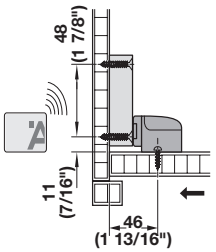

In order to open, the transponder card must be held against the side of the cabinet.

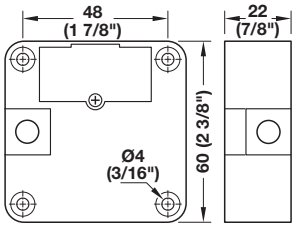

Furniture Lock

→ EFL 50

> Battery-operated
> Material: Plastic

Finish	Item No.
black	231.07.400

→ Lead for EFL 51

Length	Item No.
500 (19 11/16")	833.72.880
1000 (39 3/8")	833.72.881
2000 (78 3/4")	833.72.882

> Intelligent locker lock for indoor use in wardrobes, lockers and cabinets for wood, glass or sliding doors

Functionality:

Standard mode
One or several (optional) user keys have a fixed allocation to one or several (optional) lockers for locking and unlocking. The lock remains open for 3 seconds after opening, and locks again automatically.

Wellness mode (free choice of locker)
Any user card can lock an open locker. The user card is assigned to the selected locker, only this user card can unlock the locker. When the locker is unlocked, the assignment is deleted.

Toggle mode (deadbolt lock function)
When an authorized transponder is held in front of the device, the lock unlocks and remains unlocked. When the authorized transponder is presented again, the lock is locked.

Technical Data

Technology:	Mifare Classic
Degree of protection:	IP20
Battery:	CR 123 3V
Battery service life:	Approx. 20,000 locking and unlocking processes
Number of possible keys:	49
Operating temperature:	5 °C – +35 °C
Reading range:	Card: max. 20 mm (25/32") Tag: max. 10 mm (3/8")

Note
Particularly suitable for furniture with soft and self-closing mechanisms. For drawers and hinged doors with push-to-open function, the locking component must also be installed.
If the battery voltage is too low, the lock no longer locks and a 15 second continuous tone is emitted.
In order to avoid interference between locks, a minimum distance of 10 cm (3 15/16") must be maintained between installed locks and also during storage. If the distance is less than this minimum, continuous communication will take place between the locks, which will drain the battery. To avoid unnecessary battery draining, do not insert the battery until start-up.

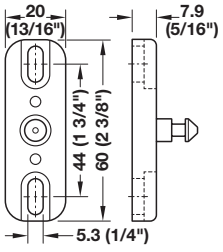

Locking Component

→ EFL 51

> Powered by Loox 12v driver
> Material: Plastic

Finish	Item No.
black	231.07.401

Supplied with
Installation instructions

Note
Please order the locking component and the batteries separately. Modes which differ from the standard must be ordered separately (Wellness/Toggle programming cards).

Dimensional data not binding. Dimensions in mm, inches are approximate. We reserve the right to alter specifications without notice.

EFL50/EFL51

→ Locking Component with Push-to-Open Function

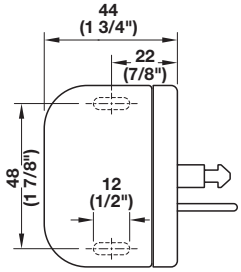

> For EFL50
> 3-dimensional adjustment with an elegant design
> 90° installation facility, for use on both hinged doors and drawers
> The integrated ejector (push-to-open function) with spring force of 5.4 N opens the door automatically as soon it is unlocked; hinges with a hold-closed function are not suitable for this combination
> The locking bolt is floating, which can compensate for tolerances of +/- 3 mm (1/8")
> The integrated predetermined breaking point of 35 kg (77 lbs.) protects furniture in the event of forced opening
> Not suitable for constructions with soft and self-closing mechanisms
> Material: Plastic

Finish	Item No.
black	231.07.411

→ Locking Component

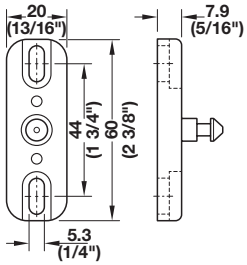

> For EFL50/EFL51
> The striking plate has a predetermined breaking point which breaks at about 35 kg (77 lbs.)
> The locking bolt is floating, which can compensate for tolerances of +/- 3 mm
> Suitable for constructions with soft and self-closing mechanisms
> Material: Plastic

Finish	Item No.
black	231.07.410

→ Glass Door Set

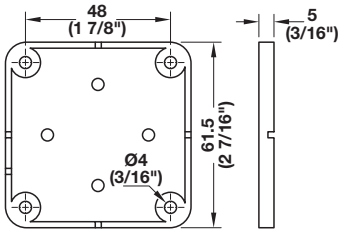

> For EFL50/EFL51
> For hinged doors with up to 45 kg (99 lbs.) of pulling force and sliding doors with up to 25 kg (55 lbs.) of pushing force
> Material: Plastic

Finish	Item No.
black	231.07.412

Supplied With
Support plate with bonding surface
4 Screws
Black adhesive foil for opposite side

→ KT Key Tag, Mifare Classic

Technical Data
Operating temperature: –35 °C – +50 °C (-95° F – +122° F)
Data storage: >10 years

> For EFL50/EFL51
> 4 independent locking authorizations per key tag possible
> Reader range: up to 12 mm (1/2") thick material
> Water resistant
> Material: Plastic

Color	Item No.
black	917.64.093
blue	917.64.098
red	917.64.099

Dimensional data not binding. Dimensions in mm, inches are approximate. We reserve the right to alter specifications without notice.

Programming Cards

Programming cards are used to either assign user keys to the EFL 50 furniture locks, or switch between the different modes with which the EFL 50 can be operated: “Standard Mode”, “Wellness Mode” and “Toggle Mode”.

→ Programming Card for EFL 50 “Standard Mode”

In order to assign the programming card for EFL 50 “Standard Mode” to an EFL 50, the button on the back of the EFL 50 must be pressed and the programming card held in front of it within 3 seconds. The programming card can be assigned to 1 to n EFL 50 locks, but at least one programming card is required to be able to teach in the user keys. If an EFL 50 is assigned to a further programming card for EFL 50 “Standard Mode”, the previously set value is overwritten, causing the programming card to lose its assignment to the associated EFL 50.

> For teaching in user keys or as a general key

	Item No.
	231.07.423

→ “Wellness Mode” Programming Card

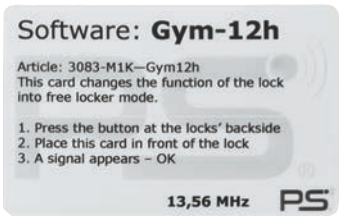

In order to switch to ”Wellness Mode” the button on the back of the EFL 50 must be pressed and the card held in front of the device within 3 seconds. Successful programming is confirmed with 2 tones. If an assigned user key is lost, the door can be opened using the programming card for EFL 50 “Standard Mode”, the assigned key then loses its permissions for the associated EFL 50.

> For switching to “Wellness Mode”

	Item No.
	231.07.420

→ “Toggle Mode” Programming Card

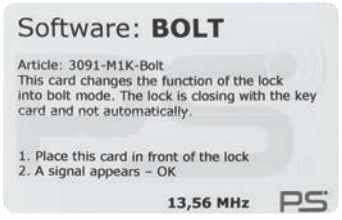

In order to switch to “Toggle Mode”, the “Toggle Mode” programming card must be held in front of the device. Successful programming is confirmed with 2 tones.

> For switching to “Toggle Mode”

	Item No.
	231.07.421

→ “Standard Mode” Programming Card

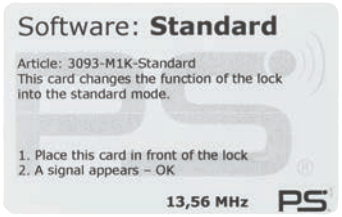

The EFL 50 furniture lock is furnished in “Standard Mode”, but if this mode has been changed (“Wellness Mode” or “Toggle Mode”), the mode can be switched back to “Standard Mode” using this programming card. In order to switch to “Standard Mode”, the “Standard Mode” programming card must be held in front of the device. Successful programming is confirmed with 2 tones.

> For switching to “Standard Mode”

	Item No.
	231.07.422

Dimensional data not binding. Dimensions in mm, inches are approximate. We reserve the right to alter specifications without notice.

SOLO 125 Furniture Lock Set

→ Installation

Hinged door

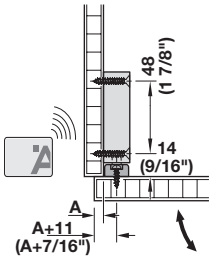

In order to open, the transponder card must be held against the side of the cabinet.

Hinged Door with push-to-open function

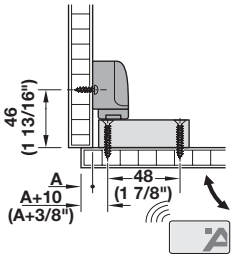

In order to unlock, the transponder card must be held against the hinged door.

Sliding Door

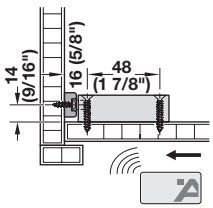

In order to unlock, the transponder card must be held against the sliding door.

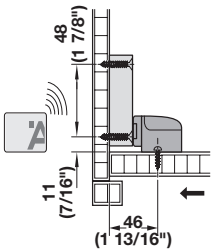

In order to open, the transponder card must be held against the side of the cabinet.

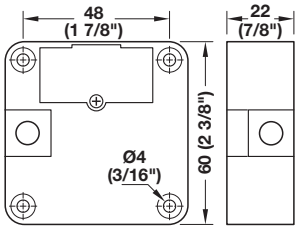

Furniture Lock

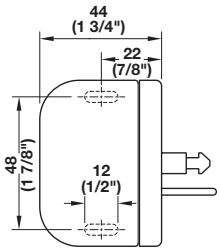

Locking Component

> Intelligent locker lock for indoor use in wardrobes, lockers and cabinets for wood, glass or sliding doors

Functionality:

Standard mode
One or several (optional) user keys have a fixed allocation to one or several (optional) lockers for locking and unlocking. The lock remains open for 3 seconds after opening, and locks again automatically.

Wellness mode (free choice of locker) - optional
Any user card can lock an open locker. The user card is assigned to the selected locker, only this user card can unlock the locker. When the locker is unlocked, the assignment is deleted.

Toggle mode (deadbolt lock function) - optional
When an authorized transponder is held in front of the device, the lock unlocks and remains unlocked. When the authorized transponder is presented again, the lock is locked.

Technical Data

Technology:	125 KHz proximity card
Degree of protection:	IP20
Battery:	CR 123 3V
Battery service life:	Approx. 20,000 locking and unlocking processes
Number of possible keys:	49
Operating temperature:	5 °C – +35 °C
Reading range:	Card: max. 20 mm (25/32") Tag: max. 10 mm (3/8")

Note
Particularly suitable for furniture with soft and self-closing mechanisms. For drawers and hinged doors with push-to-open function, the locking component must also be installed.
If the battery voltage is too low, the lock no longer locks and a 15 second continuous tone is emitted.
In order to avoid interference between locks, a minimum distance of 10 cm (3 15/16") must be maintained between installed locks and also during storage. If the distance is less than this minimum, continuous communication will take place between the locks, which will drain the battery. To avoid unnecessary battery draining, do not insert the battery until start-up.

→ SOLO 125 Furniture Lock Set

> Battery-operated
> Material: Plastic

Finish	Item No.
black	231.07.502

Note
1 Programming card
2 User cards
1 CR123A battery
Mounting screws

Dimensional data not binding. Dimensions in mm, inches are approximate. We reserve the right to alter specifications without notice.

HÄFELE

This page is left blank intentionally.

Dimensional data not binding. Dimensions in mm, inches are approximate. We reserve the right to alter specifications without notice.

PointSafe

> Solid single steel wall body
> Double steel wall door
> Anti-drill plate in door frame
> Electronic combination lock (German made)
> Operated with 4 AA batteries
> Self-programmable master and user codes
> Two drillings on the back wall and on the bottom for mounting
> Material: Steel; Finish: Body: black; Keypad: gray

Supplied With
Mounting Hardware

→ Compact

> Administrator code, User code, Emergency key
> Exterior H x W x D: 180 x 280 x 215 mm (7 1/16" x 11" x 8 7/16")
> Interior H x W x D: 173 x 273 x 141 mm (6 13/16" x 10 3/4" x 5 9/16")

	Item No.
	836.50.310

→ Standard

> Administrator code, User code, Emergency key
> Exterior H x W x D: 255 x 350 x 315 mm (10 1/16" x 13 3/4" x 12 3/8")
> Interior H x W x D: 248 x 343 x 241 mm (9 3/4" x 13 1/2" x 9 1/2")

	Item No.
	836.50.311

→ Standard

> Administrator code, User code, 5 Fingerprint codes, Emergency key
> Exterior H x W x D: 255 x 350 x 315 mm (10 1/16" x 13 3/4" x 12 3/8")
> Interior H x W x D: 248 x 343 x 241 mm (9 3/4" x 13 1/2" x 9 1/2")

	Item No.
	836.50.300

Dimensional data not binding. Dimensions in mm, inches are approximate. We reserve the right to alter specifications without notice.

PointSafe

> Solid single steel wall body
> Double steel wall door
> Anti-drill plate in door frame
> Electronic combination lock (German made)
> Operated with 4 AA batteries
> Self-programmable master and user codes
> Two drillings on the back wall and on the bottom for mounting
> Material: Steel; Finish: Body: black; Keypad: gray

Supplied With
Mounting Hardware

→ Legal Paper Size

> Administrator code, User code, 5 Fingerprint codes, Emergency key
> Exterior H x W x D: 320 x 442 x 365 mm (12 5/8" x 17 3/8" x 14 3/8")
> Interior H x W x D 310 x 435 x 288 mm (12 3/16" x 17 1/8" x 11 5/16")

	Item No.
	836.50.301

→ Large

> Administrator code, User code, 5 Fingerprint codes, Emergency key
> Exterior H x W x D: 500 x 416 x 365 mm (19 11/16" x 16 3/8" x 14 3/8")
> Interior H x W x D: 490 x 410 x 288 mm (19 5/16" x 16 1/8" x 11 5/16")

	Item No.
	836.50.302

Dimensional data not binding. Dimensions in mm, inches are approximate. We reserve the right to alter specifications without notice.

3 Steps to the Product Selection

The following three steps will assist in choosing the correct product.

Step 1
> Decide whether mains or battery operation is required.
> The advantages and areas of application of the respective operating modes can be found in the below diagrams.
> Once you have determined the operation mode, please select the model in step 1 by determining wood or glass doors, area of application and design requirements. This will direct you to the suitable model.

Go to step 2 via the relevant page. You will find this in the colored bar next to the text “continue to step 2 on page **10.97**”.

Step 2
> Reference is made to the individual products that need to be ordered to produce the required furniture locking system. This configuration will cover all standard applications.
> If additional questions arise, your Häfele sales representative will provide assistance.

Step 3
> In the third step you can choose the way in which you wish to program the furniture lock.
> The following systems are available: Stand alone with key card system for approximately 20 furniture locks
Software for larger projects for managing on a PC
> A detailed overview and all of the relevant information that will make your choice easier can be found on page **10.88**.

→ Mains Operated

Usage area
> Wood or glass hinged doors
> Lockers and safe deposit boxes
> Lift-ups
> Wood or glass sliding doors
> Tambour doors
> Drawers

Advantages of mains operation
> No service interval for battery replacement
> Optional extensions and online connection

Continue to step 1, page **10.89**.

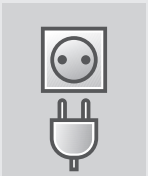

→ Battery Operated

Area of application
> Lockers and safe deposit boxes

Advantages of battery operation
> No cabling to socket required for operation
> Low-cost variant
> Easy to install

Continue to step 1, page **10.89**.

Dimensional data not binding. Dimensions in mm, inches are approximate. We reserve the right to alter specifications without notice.

The Dialock electronic access control system has numerous extension options such as connections to online, systems from other providers and time recording systems.
Your Häfele sales representative and our project specialists will assist in working out a suitable solution.

Select Product Model

> Furniture locks mains or battery-operated
> Type of door/area of application
> Security requirements
> Functions/features

	Mains operation		
	EFL 3	EFL 3C	EFL 6
Proceed to step 2 on page 10.97	**page 10.93**		**page 10.98**
Type of door/area of application			
Hinged door (wood)	✓	✓	✓
Hinged door (glass)	✓		
Changing lockers (wood door up to 19 mm (3/4") thick)	✓	✓	
Safe deposit boxes (wood door up to 19 mm (3/4") thick)		✓	
Flap (wooden front)	✓	✓	
Sliding doors (wood door)	✓	✓	
Sliding doors (glass door)			
Tambour doors (wood slats)	✓	✓	
Drawer (wood drawer sides)	✓	✓	
PO box system, locker system, distribution system	✓		
Wallpapered door in stores	✓	✓	
Security requirements			
Standard requirements (see table below)	✓		✓
Increased security requirements (see table below)		✓	
Drawer with Push-to-Open function			
Drawer with soft closing/self-closing mechanism	✓	✓	
External product connection via relay	✓		
Functions/features			
Alarm system with feedback contact. A macro is required in order to use the feedback contact.		✓	
Macros for individual configuration	✓	✓	✓

What are the security requirements for the furniture lock?

→ Standard Requirements

For use in areas that are not accessible to the public and where acoustic or optical alarm as feedback is not required.

Mains operation
> EFL 3
> EFL 6
> EFL 41

Battery-operated
> LL 200
> EFL 50

→ Increased security requirements

For use in areas that are accessible to the public and where acoustic or optical alarm as feedback is required/not required (optional).

Mains operation
> EFL 3C

Battery-operated
> LL 200

Dimensional data not binding. Dimensions in mm, inches are approximate. We reserve the right to alter specifications without notice.

Step 1

	Battery-operated	
EFL 41	**LL 200**	**EFL 50**
page 10.100	**page 10.79**	**page 10.82**
	✓	✓
	✓	✓
✓		
✓	✓	
	✓	✓
✓		
✓	✓	

Dimensional data not binding. Dimensions in mm, inches are approximate. We reserve the right to alter specifications without notice.

Ordering Product Components

Required number of furniture locks	Connection cable, cable length 3 m (118")	Multi-lock adapter		Power supply unit	Furniture terminal	Antenna**, cable length 3 m (118")
EFL 3/EFL 3C*	CC 200	MLA 6P	MLA 8		FT 200	FAN 200
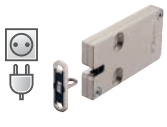						
237.59.000/001	237.59.022	237.59.032	237.59.030	237.58.149	237.59.010	237.59.061
page 10.93	page 10.94	page 10.104	page 10.106	page 10.110	page 10.102	page 10.104
Keyed alike hinged doors, lift-up fittings, sliding doors, drawers and tambour doors						
1–4	1–4	–	–	1	1	1
5–9	5–9	1	–	1	1	1
10–14	10–14	2	–	1	1	1
15–20	15–20	–	2	2	1	1
21–28	21–28	–	3	2	1	1
29–36	29–36	–	4	3	1	1
37–44	37–44	–	5	3	1	1
45–52	45–52	–	6	4	1	1
53–60	53–60	–	7	4	1	1
61–68	61–68	–	8	5	1	1
69–76	69–76	–	9	5	1	1
77–84	77–84	–	10	6	1	1
85–92	85–92	–	11	6	1	1
93–100	93–100	–	12	7	1	1
101–108	101–108	–	13	7	1	1
109–116	109–116	–	14	8	1	1
117–124	117–124	–	15	8	1	1
125–132	125–132	–	16	9	1	1
Keyed different hinged doors, lift-up fittings, sliding doors, drawers and tambour doors						
2–4	2–4	–	–	1	1	1
5–12	5–12	–	1	1	1	1

For combination of keyed alike and keyed different hinged doors, lift-up fittings, sliding doors, drawers and tambour doors, see next page.

*EFL 3 output ports that are not occupied by an MLA 6P can be used keyed alike and also keyed different.
**FAN 200: A second antenna can be connected to a FT 200 (optional).

Continue to step 3

Page **10.111**

Programming and user keys

Installation examples

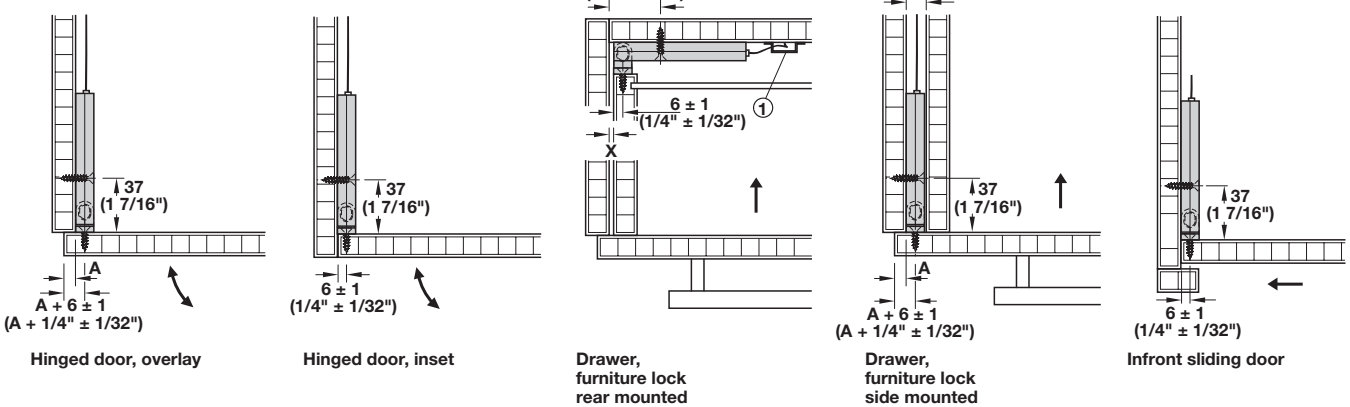

Dimensional data not binding. Dimensions in mm, inches are approximate. We reserve the right to alter specifications without notice.

Ordering examples for a combination of keyed alike and keyed different for hinged doors

Look for the smallest value in the table next to "gs" or "vs". The values in the table are maximum values and may not be exceeded. Undershooting is possible. The quantities reduce accordingly with the CC 200 and with the number of furniture terminal and multilock adapter/distributor output ports for keyed alike and keyed different locks.
gs = keyed alike; vs = keyed different; The quantity of CC 200 connection cables corresponds to the quantity of EFL 3/EFL 3C.

→ Example 1 – small furniture item

> 3 doors keyed alike "gs"
> 1 door keyed different "vs"
Step 1: Look for your required quantity "vs"
Step 2: Check whether "gs" corresponds to at least your required quantity here. If yes, go to step 3, and if no, search for the next line with the required number of "vs"
Step 3: Required order quantities
Step 4: Pin configuration for furniture terminal and multi-lock adapter/distributor output ports for keyed alike and keyed different locks

Step 1		**Step 2**	**Step 3**					**Step 4**					
Required number of furniture locks		Connection cable, cable length 3 m (118")	Multi-lock adapter		Power supply unit	Furniture terminal	Antenna, cable length 3 m (118")	Pin configuration for furniture terminal and multi-lock adapter/distributor output ports for keyed alike and keyed different locks					
EFL 3/EFL 3C		CC 200	MLA 6P	MLA 8	PS 4	FT 200	FAN 200	FT 200		MLA 6P		MLA 8	
gs	vs							gs	vs	gs	vs	gs	vs
FT 200													
4	0	4	–	–	1	1	1*	4	0	–	–	–	–
3	1	4	–	–	1	1	1*	3	1	–	–	–	–
2	2	4	–	–	1	1	1*	2	2	–	–	–	–
1	3	4	–	–	1	1	1*	1	3	–	–	–	–

Example 1.1
> 2 doors keyed alike "gs"
> 1 door keyed different "vs"
Since 2 locks are "gs", the same selection can be used. "gs" = 3 is the max. number. Less is possible, but not more. CC 200 reduces to 3 units.

→ Example 2 – large furniture item

11 doors keyed alike "gs"
6 doors keyed different "vs"

Step 1		**Step 2**	**Step 3**					**Step 4**					
Required number of furniture locks		Connection cable, cable length 3 m (118")	Multi-lock adapter		Power supply unit	Furniture terminal	Antenna, cable length 3 m (118")	Pin configuration for furniture terminal and multilock adapter/distributor output ports for keyed alike and keyed different locks					
EFL 3/EFL 3C		CC 200	MLA 6P	MLA 8	PS 4	FT 200	FAN 200	FT 200		MLA 6P		MLA 8	
gs	vs							gs	vs	gs	vs	gs	vs
FT 200 in combination with 1 x MLA 6P and 1 x MLA 8													
17	0	17	1	1	2	1	1*	3	0	6	0	8	0
16	1	17	1	1	2	1	1*	2	1	6	0	8	0
15	2	17	1	1	2	1	1*	1	2	6	0	8	0
14	3	17	1	1	2	1	1*	0	3	6	0	8	0
13	4	17	1	1	2	1	1*	0	3	6	0	7	1
12	5	17	1	1	2	1	1*	0	3	6	0	6	2
11	6	17	1	1	2	1	1*	3	0	6	0	2	6
10	7	17	1	1	2	1	1*	3	0	6	0	1	7
9	8	17	1	1	2	1	1*	3	0	6	0	0	8
8	9	17	1	1	2	1	1*	2	1	6	0	0	8
7	10	17	1	1	2	1	1*	1	2	6	0	0	8

→ Example 2.1 – large furniture item

> 8 doors keyed alike "gs"
> 6 doors keyed different "vs"

Since 8 locks are "gs", the same selection can be used. "gs" = 11 is the max. number. Less is possible, but not more. CC 200 reduces to 14 units.

gs = keyed alike; vs = keyed different
* A second FAN 200 antenna can be used (optional)

Dimensional data not binding. Dimensions in mm, inches are approximate. We reserve the right to alter specifications without notice.

Ordering product components

Combination of keyed alike and keyed different for hinged doors, lift-up fittings, sliding doors, drawers and tambour doors.

Step 1		Step 2	Step 3					Step 4					
Required number of furniture locks		Connection cable, cable length 3 m (118")	Multi-lock adapter		Power supply unit	Furniture terminal	Antenna, cable length 3 m (118")	Pin configuration for furniture terminal and multi-lock adapter output ports for keyed alike and keyed different locks					
EFL 3/EFL 3C		CC 200	MLA 6P	MLA 8	PS 4	FT 200	FAN 200	FT 200		MLA 6P		MLA 8	
gs	vs							gs	vs	gs	vs	gs	vs
FT 200													
4	0	4	–	–	1	1	1*	4	0	–	–	–	–
3	1	4	–	–	1	1	1*	3	1	–	–	–	–
2	2	4	–	–	1	1	1*	2	2	–	–	–	–
1	3	4	–	–	1	1	1*	1	3	–	–	–	–
0	4	4	–	–	1	1	1*	0	4	–	–	–	–
FT 200 in combination with 1 x MLA 6P													
9	0	9	1	–	1	1	1*	3	0	6	0	–	–
8	1	9	1	–	1	1	1*	2	1	6	0	–	–
7	2	9	1	–	1	1	1*	1	2	6	0	–	–
6	3	9	1	–	1	1	1*	0	3	6	0	–	–
FT 200 in combination with 1 x MLA 8													
12	0	12	–	1	1	1	1*	4	0	–	–	8	0
11	1	12	–	1	1	1	1*	3	1	–	–	8	0
10	2	12	–	1	1	1	1*	2	2	–	–	8	0
9	3	12	–	1	1	1	1*	1	3	–	–	8	0
8	4	12	–	1	1	1	1*	0	4	–	–	8	0
7	5	12	–	1	1	1	1*	4	0	–	–	3	5
6	6	12	–	1	1	1	1*	4	0	–	–	2	8
5	7	12	–	1	1	1	1*	4	0	–	–	1	7
4	8	12	–	1	1	1	1*	4	0	–	–	0	8
3	9	12	–	1	1	1	1*	3	1	–	–	0	8
2	10	12	–	1	1	1	1*	2	2	–	–	0	8
1	11	12	–	1	1	1	1*	1	3	–	–	0	8
0	12	12	–	1	1	1	1*	0	4	–	–	0	8
FT 200 in combination with 1 x MLA 6P and 1 x MLA 8													
17	0	17	1	1	1	1	1*	3	0	6	0	8	0
16	1	17	1	1	1	1	1*	2	1	6	0	8	0
15	2	17	1	1	1	1	1*	1	2	6	0	8	0
14	3	17	1	1	1	1	1*	0	3	6	0	8	0
13	4	17	1	1	1	1	1*	0	3	6	0	7	1
12	5	17	1	1	1	1	1*	0	3	6	0	6	2
11	6	17	1	1	1	1	1*	3	0	6	0	2	6
10	7	17	1	1	1	1	1*	3	0	6	0	1	7
9	8	17	1	1	1	1	1*	3	0	6	0	0	8
8	9	17	1	1	1	1	1*	2	1	6	0	0	8
7	10	17	1	1	1	1	1*	1	2	6	0	0	8
6	11	17	1	1	1	1	1*	0	3	6	0	0	8
5	11	16	1	1	1	1	1*	0	3	5	0	0	8
4	11	15	1	1	2	1	1*	0	3	4	0	0	8
3	11	14	1	1	2	1	1*	0	3	3	0	0	8
2	11	13	1	1	2	1	1*	0	3	2	0	0	8
1	11	12	1	1	2	1	1*	0	3	1	0	0	8

gs = keyed alike
vs = keyed different
* a second FAN 200 antenna can be used (optional)

Note
The desired number of furniture locks must not exceed the permitted max. number of furniture locks. Using less furniture locks is possible.

Dimensional data not binding. Dimensions in mm, inches are approximate. We reserve the right to alter specifications without notice.

EFL 3 and EFL 3C

- > Optional, integrated contact for door status indication EFL 3C
- > Electromotive locking, magnetic interactions cannot take place
- > Flat design for variable and integrated installation in furniture
- > EFL 3 can be mounted on both sides
- > Locking component can be mounted on front edge or on the side
- > Anti-twist connection plug

→ Furniture locks

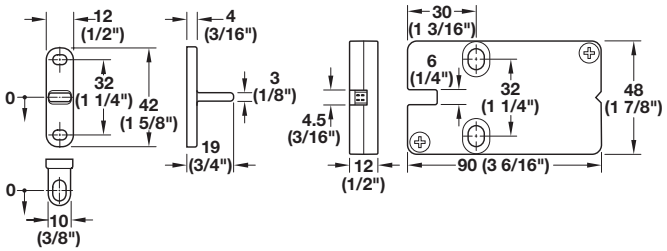

- > The furniture lock remains unlocked for 3 seconds when presenting an authorized user key in combination with the FT 200, FT 200 CAP furniture terminal (standard spring bolt lock function)
- > The lock locks automatically once the open time has elapsed
- > The door status (locked/unlocked) can be determined with feedback contact and additional macro
- > The connected FT 200 furniture terminal will generate an alarm accordingly
- > More information on functionality can be found under the FT 200 / FT 200 CAP furniture terminals

Technical Data	
Voltage supply	12 V DC
Continuous current consumption	<10 mA
Current consumption max. (including EFL 3)	130 mA/40 ms
Tensile load	1000 N
Door width	<200 mm, trial mounting required
Operating temperature	0–50 °C
Degree of protection	IP20
Relative humidity	10–95 % (not condensed)

- > For indoor use: For hinged doors, lift-up fittings, sliding doors, drawers or tambour doors in furniture, office and store fixtures
- > Electromotive locking, EFL 3: self-adjusting locking component with 3D tolerance compensation, locking plate crossways, EFL 3C: Locking component with magnet, locking plate crossways, flat type, 12 mm (installation next to drawers possible with a distance of >12 mm to cabinet side panel)
- > Material: Lock case and locking bolt: Zinc Alloy
  Finish: Lock case and locking bolt: nickel-plated

Version	Item No.
EFL 3 furniture lock with feedback contact	237.59.000
EFL 3C furniture lock with additional feedback contact "Magnetic contact (Reed contact) in lock"	237.59.001

Supplied With
EFL 3 or EFL 3C furniture lock
Locking component

Order reference
Please order CC 200 connection cable and marking gauge for EFL 3 / EFL 3C separately.

Note
Use marking gauge for installation. Note max. cable lengths, for more information see MLA 6P and MLA 8 multi-lock adapters. A furniture handle (hole spacing 32 mm) can be screwed to the backside of the fixing plate of the locking component. Particularly suitable for furniture constructions with soft and self closing mechanisms, and installation in vehicles or RVs. Not suitable for drawers and hinged doors with Push-to-Open function.

Additional fascia/material (e.g. slotted sheet metal plate) may not be installed between EFL 3 / EFL 3C and locking component.

Dimensional data not binding. Dimensions in mm, inches are approximate. We reserve the right to alter specifications without notice.

EFL 3 and EFL 3C

→ CC 200 Connection cable

> For connecting an EFL 3 or EFL 3C furniture lock to the MLA 6P/MLA 8 multi-lock adapter or the FT 200 / FT 200 CAP furniture terminal
> With mini plug and RJ10 plug
> Color: black

Cable length	Item No.
0.5 (19 11/16")	237.59.020
1 (39 3/8")	237.59.021
3 (118 1/8")	237.59.022
5 (196 7/8")	237.59.023
10 (393 23/32")	237.59.024

Note
The connection cables are only compatible with the EFL 3 (237.59.000) and EFL 3C (237.59.001) furniture locks of the current generation (see page 10.292).

→ EFL 3/EFL 3C DG2 Adapter cable

> For connecting the current version of the EFL 3 (237.59.000) and EFL 3C (237.59.001) furniture locks with the previous version of the V2 connection cable (237.56.340–237.56.349).
> With previous mini plug and new mini plug
> Color: black

Cable length	Item No.
100 (4")	237.56.335

Note
For replacing EFL 3 (237.56.304) and EFL 3C (237.56.305) furniture locks of the previous generation in existing systems with EFL 3 (237.59.000) and EFL 3C (237.59.001) furniture locks of the current generation, without changing the connection cables.

Dimensional data not binding. Dimensions in mm, inches are approximate. We reserve the right to alter specifications without notice.

EFL 3 and EFL 3C

→ Locking Component, self-adjusting

Locking plate widthwise

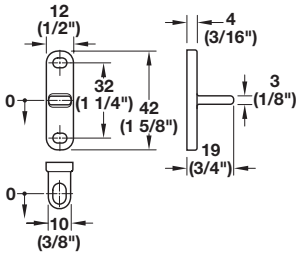

> For EFL 3
> Material: Zinc Alloy

	Item No.
	237.59.029

Note
Cannot be combined with the EFL 3C.

→ Locking Component for screw mounting

Locking plate widthwise

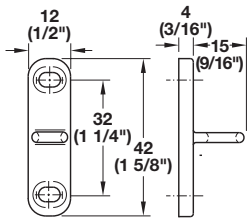

Locking plate lengthwise

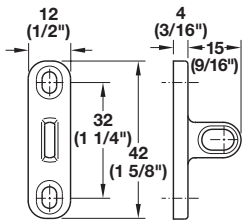

> For EFL 3 and EFL 3C
> Material: Zinc Alloy

	Version	Item No.
Locking component for EFL 3	widthwise	237.56.310
	lengthwise	237.56.312
Locking component with magnet for EFL 3C feedback contact for monitoring	widthwise	237.56.311
	lengthwise	237.56.313

Note
Locking component with magnet for EFL 3C feedback contact for monitoring experiences loss of function when installed in metal surroundings.

→ Locking Component for glue mounting

Locking plate widthwise

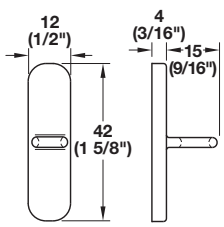

> For EFL 3
> Material: Zinc Alloy

	Item No.
	237.56.315

→ Marking Gauge

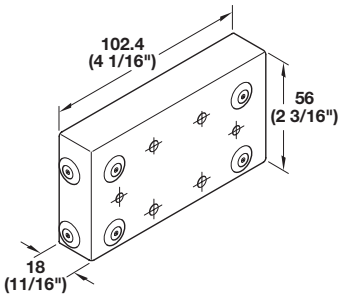

> For locking component
> Screw mounted
> With 3 center punch pairs, position marking gauge on EFL 3 or EFL 3C furniture lock, the required screw-on position for the locking component is marked when the door is being closed

	Item No.
	237.56.330

Dimensional data not binding. Dimensions in mm, inches are approximate. We reserve the right to alter specifications without notice.

EFL 3 and EFL 3C

→ Test Device

> For function check of the EFL 3 and EFL 3C furniture locks
> Lock function and feedback contact are tested
> Independent of the FT 120, FT 130, FT 200, FT200 CAP furniture terminals, MLA 6P, MLA 8 multi-lock adapters and power supply
> Material: Plastic

Color	Item No.
anthracite/light gray	237.56.993

Supplied With
Test device
Block battery 9 V

Note
The CC 200 connection cables cannot be tested.

→ 9 V Block Battery

> For high reliability and requirement
> For replacement battery for the test device
> Model series: Block, 9V
> Model: 6LR61
> Voltage: 9 V

	Item No.
	910.54.956

→ ACC Y-adapter

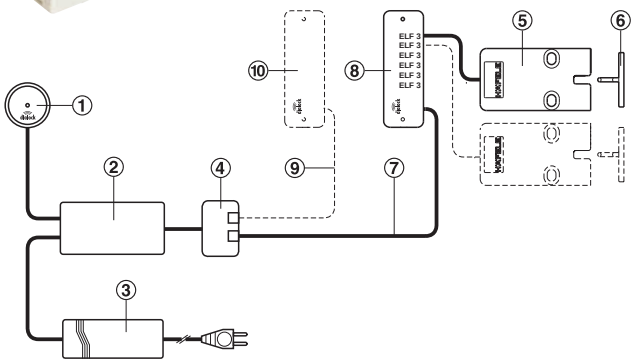

> For emergency opening of EFL 3 and EFL 3C furniture locks
> The Y-adapter is connected to the FT 200 furniture terminal
> In the event of a power failure, power can be supplied separately via the Y-adapter for an emergency opening
> Power is supplied via the test device
> The Y-adapter can be connected directly to the EFL 3, EFL 3C or MLA 6P, MLA 8
> Version: With 1 RJ10 plug and 2 RJ10 sockets
> Length: 100 mm (4")
> Material: Plastic

Color	Item No.
cream	237.56.370

Safety Note
The emergency opening cable (9) (Item No. 910.51.094) must be accessible for an emergency opening. The system can be opened without transponder using the test device (10) (Item No. 237.56.993).

Order Reference
Please order emergency opening cable (9) (Item No. 910.51.094) separately.

Circuit diagram

(1) FAN 200 antenna
(2) FT 200 furniture terminal
(3) PS4 power supply unit
(4) ACC Y-adapter
(5) EFL 3 furniture lock
(6) Locking component
(7) CC200 connection cable
(8) MLA 6P multi-lock adapter
(9) Emergency opening cable
(10) Test device for EFL 3/EFL 3C

Dimensional data not binding. Dimensions in mm, inches are approximate. We reserve the right to alter specifications without notice.

Step 2

→ Ordering product components

Required number of furniture locks EFL 6	Multi-lock adapter * MLA 8	Power supply unit	6-way distributor CC 140	Furniture terminal FT 200	Antenna, cable length 3 m (118") FAN 200
237.56.062 **page 10.98**	**237.59.030** **page 10.108**	**237.58.149** **page 10.110**	**823.28.780** **page 10.110**	**237.59.010** **page 10.102**	**237.59.061** **page 10.104**
Keyed alike hinged doors, lift-ups and sliding doors					
1-5	1	1	–	1	1
6-10	2	2	–	1	1
11-15	3	3	–	1	1
16-20	4	4	–	1	1
Keyed different hinged doors, lift-ups and sliding doors					
2–5	1	1	–	1	1

* max. 5 EFL 6 furniture locks can be connected to one MLA 8 multi-lock adapter

Continue to step 3

Page **10.111**

Programming and user keys

Installation example

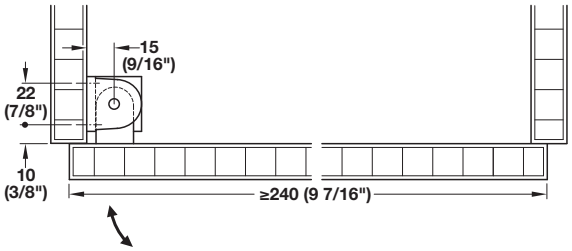

Hinged door, overlay

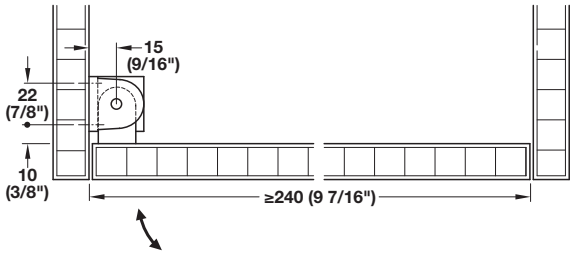

Hinged door, inset

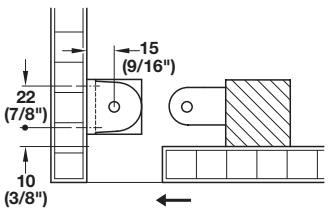

Infront wood sliding door

Dimensional data not binding. Dimensions in mm, inches are approximate. We reserve the right to alter specifications without notice.

EFL 6

→ EFL 6

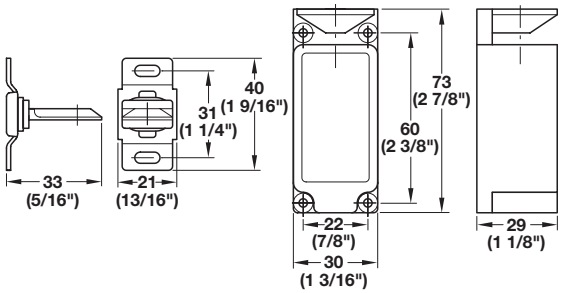

Keyed alike furniture locks
> Several EFL 6 furniture locks can be switched parallel (keyed alike) with the FT 120 in combination with the CC 140 distributor and with the FT 200 in combination with the MLA 8 multi-lock adapter

Keyed alike/keyed different furniture locks
> Several EFL 6 furniture locks can be switched parallel (keyed alike) or individually (keyed different) in combination with the MLA 8 multi-lock adapter

Using the MLA 8 also allows
> Parallel operation of keyed alike and keyed different
> Combination with other EFL furniture locks with AMP plug (e.g. EFL 41) or RJ 10 plug (EFL 3)
> Without feedback contact
> Electromechanical lock for indoor use: For hinged doors, lift-up fittings or sliding doors in furniture and office equipment
> Electromagnetic locking action, connection cable with AMP plug, stand-by current or operating current, reversible, (operation mode), vertical and horizontal installation possible, for screw mounting to the inner side of the cabinet
> An electric pulse unlocks the lock for 3 seconds
> FT 120 furniture terminal: Connection via CC 140 distributor, FT 200 furniture terminal: Connection via MLA 8 multi-lock adapter

Technical Data	
Voltage supply	12 V DC
Continuous current consumption	184 mA
Pull	90 kg
Operation mode	Currentless closed ("fail locked") or currentless open ("fail unlocked")
Cable length	2 m (78 3/4") (with AMP plug)
Operating temperature	–10 to +50 °C

	Item No.
	237.56.062

Supplied With
EFL 6 furniture lock
Interlocking door bolt

Note
Note max. cable lengths, for more information see MLA 8 multi-lock adapter. The EFL 6 furniture lock is supplied normally closed (operating mode). In order to switch from stand-by current to operating current, the screws on the rear side must be loosened and the mechanism must be turned by 180°.

Dimensional data not binding. Dimensions in mm, inches are approximate. We reserve the right to alter specifications without notice.

Step 2

→ Ordering Product Components

Required number of glass sliding doors*	Multi-lock adapter	Power supply unit	Furniture terminal	Antenna, cable length 3 m (118")
EFL 41	MLA 8		FT 200	FAN 200
237.56.971	**237.59.030**	**237.58.149**	**237.59.010**	**237.59.061**
page 10.100	**page 10.108**	**page 10.110**	**page 10.102**	**page 10.104**
Keyed alike glass sliding doors				
2	1	1	1	1
4	1	1	1	1
Keyed different glass sliding doors				
4	1	1	1	1
6	1	1	1	1

Continue to step 3

Page **10.111**

Programming and user keys

* Häfele Slido Design 25 IF glass sliding door fitting is designed for 2 doors, one EFL 41 must be ordered for each glass door.

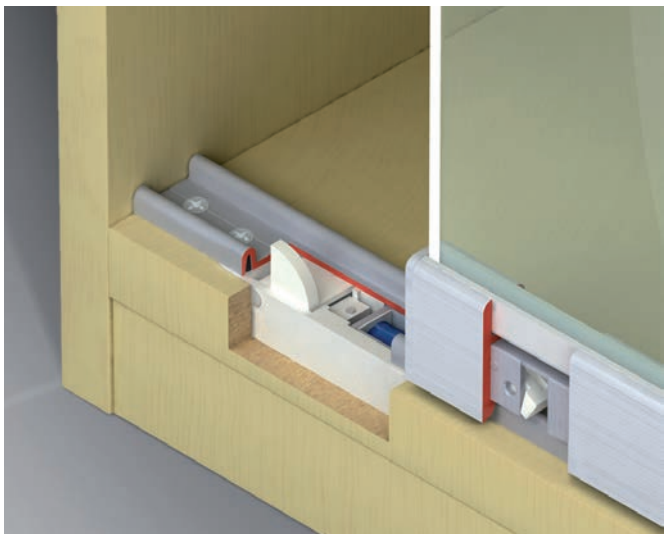

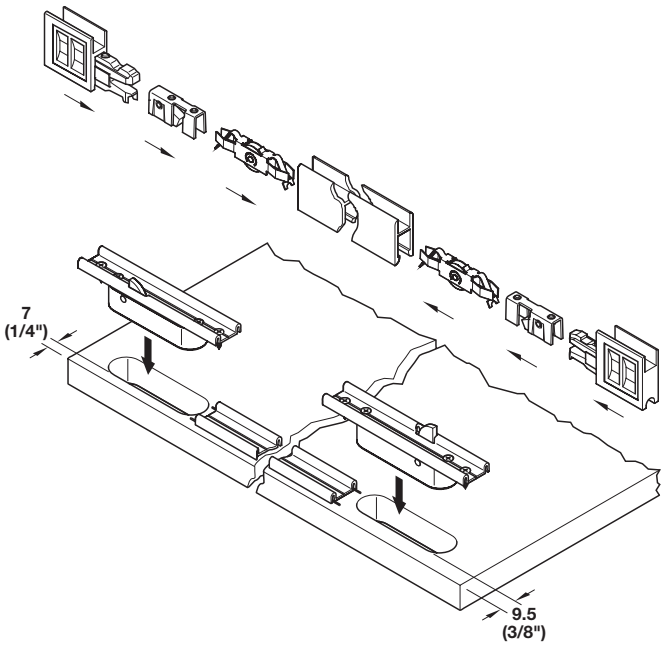

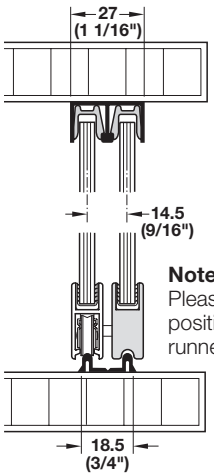

Note
Please observe straight position of glass in the runner housing profile.

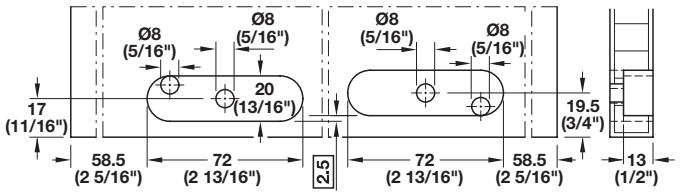

Installation example:
EFL 41 glass sliding door lock and Häfele Slido Design 25 IF glass sliding door fitting

Dimensional data not binding. Dimensions in mm, inches are approximate. We reserve the right to alter specifications without notice.

EFL 41 Glass Sliding Door Lock

→ For Sliding Glass Doors

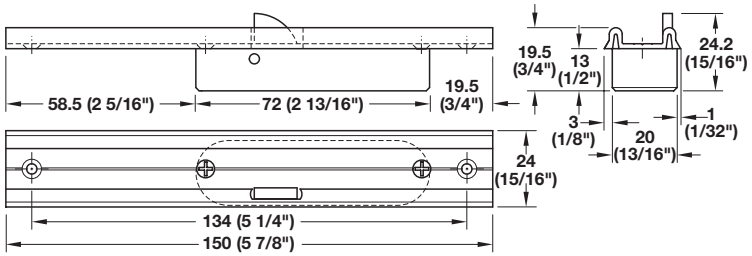

Technical data
> Voltage supply 12–24 V DC in load operation, "toggle" mode (permanent open) only permitted with 12 V DC power supply
> The max. open time in "lock cycle" mode is 15 minutes
> Power consumption 1.75 W with 13 V DC (135 mA)
> 3.0 W with 17 V DC (175 mA)
> 6.0 W with 24 V DC (250 mA)
> Tensile load >200 N

Feedback contact:
> Operating voltage: max 30 V DC
> Operating current: max. 300 mA
> Switching capacity: max. 5 W
> Sensor resistance 180 mΩ
> Operating mode Currentless closed ("fail safe"), "permanent open" mode not permitted (overheating), except with 12 V DC
> Cable length: 3 m (118") (with AMP plug)
> Operating temperature 0–50 °C

Keyed alike furniture locks
> Several EFL 41 sliding glass door locks can be switched parallel (keyed alike) with the FT 120 in combination with the CC 140 distributor and with the FT 200 in combination with the MLA 8 multi-lock adapter

Keyed alike/keyed different furniture locks:
> Several EFL 41 glass sliding door locks can be switched parallel (keyed alike) or individually keyed different) in combination with the MLA 8 multi-lock adapter
> Using the MLA 8 also allows: Parallel operation of keyed alike and keyed different
Combination with other EFL furniture locks with AMP plug (e.g. EFL 1)

Technical Data	
Voltage supply	12 V DC
Continuous current consumption	184 mA
Pull	90 kg
Operation mode	Currentless closed ("fail locked") or currentless open ("fail unlocked")
Cable length	3 m (118") (with AMP plug)
Operating temperature	–10 to +50 °C

> Electric lock for indoor use: For sliding glass doors in furniture and office equipment
> The lock remains unlocked for 3 seconds via the FT 120/FT 200 (standard), the door is locked again after 3 seconds, integrated feedback contact "Lock Locked/Unlocked"
> Locking unit for sliding into the Häfele Slido Design 25 IF G double bottom running track, connection cable with AMP plug
> FT 120 furniture terminal: Connection via CC 140 distributor, FT 200 furniture terminal: Connection via MLA 8 multi-lock adapter
> For glass thickness: 6 and 8 mm (1/4" and 5/16")
> Sliding door lock: For groove mounting into cabinet base panel
> Double running track: For screw mounting to cabinet base panel
> Runner catch: For installation in Häfele Slido Design 25 IF G runner housing profile
> The EFL 41 sliding glass door lock can only be used in combination with the Häfele Slido Design 25 IF G sliding door fitting
> The integrated feedback contact (open door alarm for glass sliding doors, for example) can be used optionally
> A macro is required for controlling the feedback contact (available on request)
> Material: Housing: Plastic; Double running track: Aluminum

	Item No.
	237.56.971

Supplied With
Locking unit pre-mounted under 150 mm (5 7/8") Häfele Slido Design 25 IF G double running track
Runner catch
Feedback control

Note
Only to be used for sliding glass doors. Bottom running track length (Häfele Slido Design 25 IF sliding door fitting): Internal cabinet dimensions – 2 x 150 mm (5 7/8") 2 x locking unit) PS power supply unit must be used for supplying power.

Dimensional data not binding. Dimensions in mm, inches are approximate. We reserve the right to alter specifications without notice.

Electric Furniture Lock

→ MCL1 Nano Magnetic Cabinet Lock

A compact medium load locking mechanism that uses electromagnetic energy to capture and hold an armature plate. The armature is released when power is turned off. The MCL1 is strong enough for structural applications and can be remotely triggered by push button, RF Remote, and Dialock® Terminals.

Features
> Compact and lightweight
> High tensile load retention
> Flexible mounting options
> Silent operation
> Releases under pre-load
> Fail safe operation

Applications
> Maintenance access panel lock
> Security cabinets and drawers
> Display showcases
> Sliding doors
> For use with self-closing doors (hinges) and drawers (slides)
> For use on doors 3–50 mm (1 1/8"–2") thick

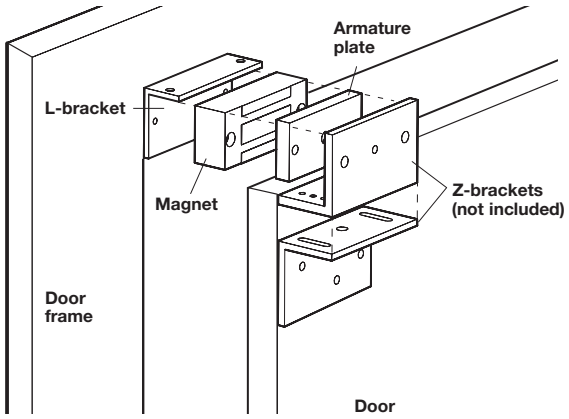

Service+

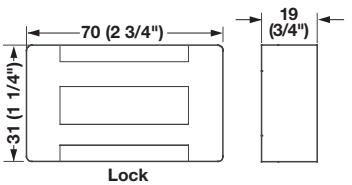

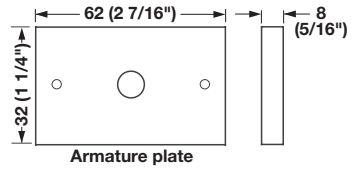

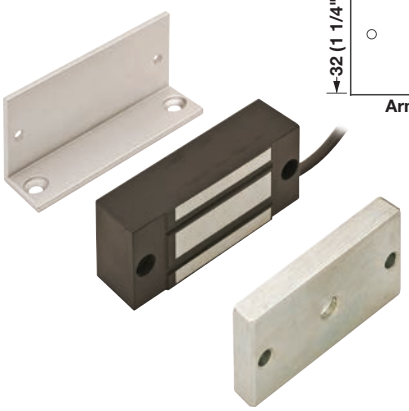

Technical Data	
Physical & Performance	at 25° C (77° F)
Magnetic Lock (L × W × H)	70 x 31 x 19 mm (2 3/4" x 1 1/4" x 3/4")
Armature	62 x 32 x 8 mm (2 7/16" x 1 1/4" x 5/16")
Weight	400 g (14 oz.)
Max. holding load	364 N (80 lbf.)
Environmental	
Operating temperature	-15° C to +40° C (5° F to +104° F)
Storage temperature	-55° C to +85° C (-67° F to +185° F)
Humidity (operating)	95% RH at 50° C (+122° F) Non combustible
Corrosion resistant finish	
Fluid/Dust resistance	(fastener closed) IP 65
Electrical	
Supply voltage	12 VDC
Power consumption	< 1.2 W
Current consumption	100 mA
Standards Compliance	CE

Note
Armature plate should "float" to allow alignment with magnet.
The MCL1 is a fail safe lock. When used with FT120, use the external relay, item 237.56.132.
When used with the FT200, use MLA 8 Item No. 237.59.030 and external relay Item No. 237.56.132.

For details contact Dialock® Department at 1-888-437-7477 or 1-336-889-2322

> Material: Lock and Armature plate: Steel; L-bracket: Aluminum

Finish	Item No.
black/chrome-plated	246.10.010

Supplied With
Male AMP connector and 2 pins, Armature plate, L-bracket, Mounting screws, Instructions

→ Z Bracket

> Material: Aluminum, clear anodized

	Item No.
	912.05.272

Note
For mounting armature plate.

→ External Relay

> Material: Plastic

	Item No.
	237.56.132

FT 200 terminal Page 10.102

Dimensional data not binding. Dimensions in mm, inches are approximate. We reserve the right to alter specifications without notice.

FT 200 / FT 200 CAP Furniture Terminal

→ For Controlling EFL 3 / EFL 3C Furniture Locks

> Integration into Dialock software for convenient configuration and administration of locking points and locking authorizations
> Prepared with BLE (Bluetooth Low Energy)
> Direct connection of up to 4 EFL 3/EFL 3C
> Connection of 2 antennas
> Extension of functions possible using individual macros
> Intelligent furniture terminal, for controlling furniture locks
> Material: Housing: Plastic; Color: black

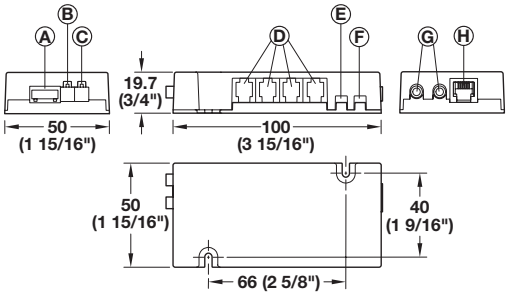

Ⓐ Potential free input/output port
Ⓑ Power supply output port
Ⓒ Power supply input port
Ⓓ 4 x EFL 3 / EFL 3C or MLA 6P connection
Ⓔ Connection for optical signal generator (LED)
Ⓕ Connection for acoustic signal generator
Ⓖ 2 x FAN 200 antenna connection
Ⓗ MLA 8 connection

Note
Please order separately:
> EFL 3 / EFL 3C furniture lock
> CC 200 connection cable (connection cable between EFL 3 and FT 200 / MLA 6P / MLA 8)
> PS 4 power supply unit
> FAN 200 antenna
> Programming and clearing key card
> User keys
> Dialock software and MDU 110 data transfer unit, if required
> A macro is required when installing an acoustic signal generator (see "optional functions")
> The plug connector must be ordered additionally when using the potential free input/output ports
> An individual macro must be installed initially when using the relay output port

Standard functions
> Activation by holding an authorized user key in front of the antenna which unlocks the furniture lock by means of a pulse
> Spring bolt lock function: Automatic locking after 3 seconds after the lock has been released (open time setting variable up to 30 seconds)
> Deadbolt lock function: The lock is locked and unlocked permanently by holding an authorized user key in front of the lock
> Acoustic feedback as key read receipt

Keyed alike furniture locks
> An authorized user key simultaneously unlocks all locks that are connected to the FT 200 / FT 200 CAP furniture terminal

Keyed different furniture locks
> An authorized user key unlocks only selected locks of all that are connected to the FT 200 / FT 200 CAP furniture terminal
> Several furniture locks can also be implemented in combination with the MLA 6P / MLA 8 multi-lock adapter
> More information on functionality can be found under the MLA 6P / MLA 8 multi-lock adapters
> One CC 200 connection cable is required for each furniture lock

Optional functions
> Indication of the locking status, e.g. for unlocked door, via acoustic or optical signal generators (external LED)
> The opening time of the furniture lock can be adjusted variably to up to 30 seconds with the red and green programming card with the spring bolt lock function
> Customer specific requirements (e.g. installation of an acoustic signal generator or activation of an alarm system) can be implemented with macro programs on request

Notes concerning software operation
Please contact your Häfele sales representative when using the Dialock software.

Notes concerning macro programs
Macro programs must be specified in advance. An MDU 110 data transfer unit and instruction by a Dialock technician is required for programming. Please contact your Häfele sales representative for more detailed information.

Dimensional data not binding. Dimensions in mm, inches are approximate. We reserve the right to alter specifications without notice.

FT 200 / FT 200 CAP Furniture Terminal

→ For Controlling EFL 3 / EFL 3C Furniture Locks

Technical Data	
Technology	Tag-it™, Mifare Classic EV1, Mifare DESFire EV1 and EV2
Voltage supply	12 V, ±20 %
EFL 3 / EFL 3C or MLA 6P connections	RJ10 – socket (4x)
MLA 8 connection	RJ11 – socket (1x)
Connection for antenna	Coaxial socket for 2 FAN 200 antennas
Cable length	150 mm (5 7/8")
Current consumption max. (including EFL 3)	75–690 mA
Signal input ports	e.g. for external feedback contact or reed contact for door monitoring
Relay output port	1 x change over
Number of possible Dialock keys	<1,000
Operating temperature	0–55 °C
Degree of protection	IP20
Relative humidity	10–95 %, not condensed
Approvals	CE, FCC / IC

Version	Item No.
Standard	237.59.010
With energy storage capacity CAP (for integrated real time clock, stored for 6 days)	237.59.011

Supplied With
FT 200 furniture terminal
Cable

Dimensional data not binding. Dimensions in mm, inches are approximate. We reserve the right to alter specifications without notice.

FAN 200

→ Antenna

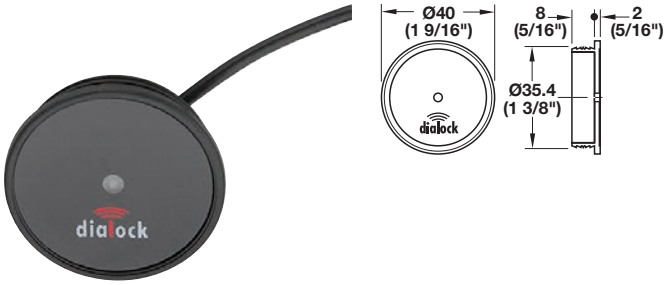

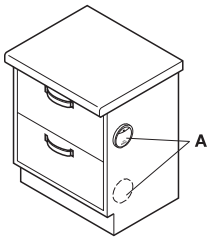

Installation example (A = antenna)

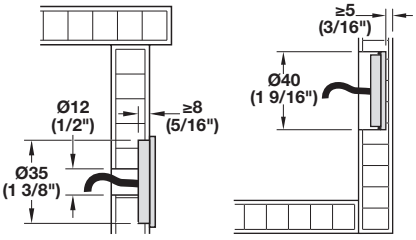

For recess mounting in 35 / 40 mm (1 3/8" / 1 5/8") cup drilling, mount antenna as close as possible to the front.

Reader Range
> Approximately 25 mm (15/16") with FT 200 and FAN 200 antenna (key fob)
> The range may be smaller due to environmental reasons, for example if metal materials or magnetic fields (power supply lines) are in the near proximity
> The FAN 200 antenna must not be installed behind or on metal surfaces or behind mirrors
> Minimum distance between 2 antennas: 250 mm (9 13/16")
> For indoor use, for installation in furniture
> Offset reader unit for keys with integrated red/green LEDs, for indication of the activation status for FT 200 / FT 200 CAP furniture terminals
> With connection cable and coaxial plug

Technical Data	
Technology	Tag-it™, Mifare Classic EV1, Mifare DESfire EV1 and Mifare DESfire EV2
Degree of protection	IP67

Cable length	Item No.
1 (39")	237.59.060
3 (118")	237.59.061
5 (197")	237.59.062

Note
The antenna can be connected directly to the output port of the FT 200 furniture terminal. The FAN 200 antenna is not suitable for installation in metal or metal coated furniture. When installing 2 antennas, the distance between the antennas must be at least 250 mm (9 13/16")

Dimensional data not binding. Dimensions in mm, inches are approximate. We reserve the right to alter specifications without notice.

Generators and Plugs

→ Signal Generator - Acoustic, 105 dB

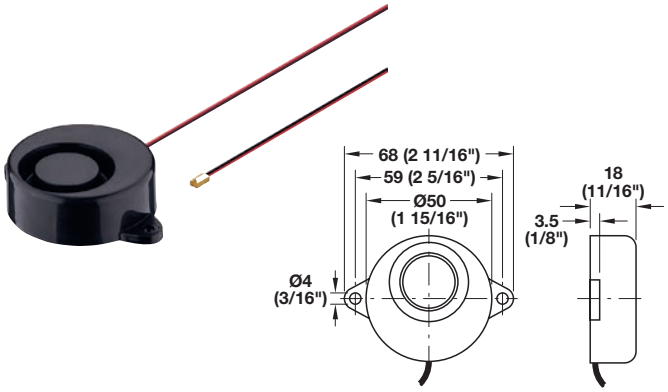

> For acoustic indication of the locking status, for FT 200 furniture terminal, also suitable for customized message alerts such as alarms
> Piezo sound generator with connection lead and plug
> Material: Plastic

Technical Data	
Voltage supply	3–20 V DC
Nominal current	8 mA
Signal	Continuous tone (frequency 3.1 kHz)
Sound level (SP)	105 dB
Fixing distance	59 mm (2 5/16")
Connection lead length	300 mm (11 13/16")
Operating temperature	–30 to +80 °C

Color/Connection Plug	Item No.
black/yellow	237.59.040

Note
A macro is required for use in combination with FT 200.
Other combinations on request.

→ Signal Generator - Optical

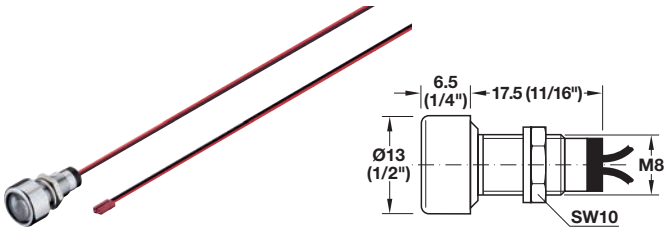

> Red/green LEDs for optical indication of the locking status, for FT 200 furniture terminal, not suitable for customized message alerts such as alarms
> Without series resistor, with connection lead and plug
> Material: Plastic

Technical Data	
Voltage supply	1.7 V AC/DC
Continuous current	20 mA
Connection lead length	5 m (196 7/8")

Color/Connection Plug	Item No.
chrome colored/red	237.59.041

→ FT 200 Plug Connector

> For terminal strip
> Material: Plastic

Color	Item No.
green	237.59.012

Supplied With
10 pcs.

Note
For using the relay output port and digital input port.

Dimensional data not binding. Dimensions in mm, inches are approximate. We reserve the right to alter specifications without notice.

MLA 6P Multi-lock Adapter

→ For EFL 3 and EFL 3C Furniture Lock

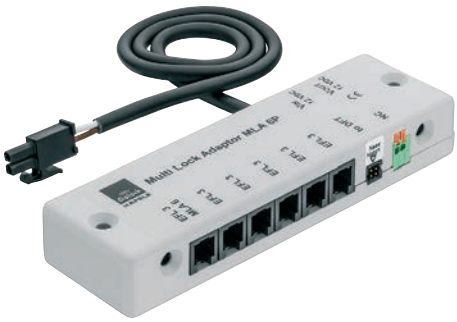

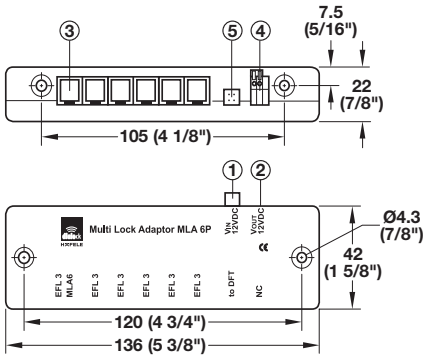

① V_{in} (voltage supply)
② V_{out} (output current) for EFL 3, EFL 3C or further
③ MLA 6P
④ NC contact normally closed (for systems from other providers)
⑤ Data in (from FT 200)

> The MLA 6P multi-lock adapter is the link between the FT 200 furniture terminal and the EFL 3 / EFL 3C furniture lock where more than four furniture locks have to be actuated
> The MLA 6P multi-lock adapter uses the incoming data signal from the FT 200 furniture terminal and forwards it to the EFL 3, EFL 3C furniture locks in the form of a pulse for unlocking/locking

Multi-lock adapter with keyed alike operation:
> For 6 EFL 3 and EFL 3C furniture locks

Other functions and special features:
> Transfer of feedback contacts (signalling the locking status of EFL 3 / EFL 3C furniture locks. A special macro is available for this application on request.)
> The additional potential free contact at the NC output port signals unlocked furniture locks and can be used by systems from other providers

Notes concerning operation
> Note max. cable lengths, see CC 200 connection cable
> Note connected loads of the system components
> The system can be easily extended with an additional MLA 8 at a later date
> Additional PS 4 power supply units are required, depending on the number of extensions or system size
> Only keyed alike operation possible
> Separate power supply
> Electronic multi-lock adapter for indoor use: For keyed alike EFL 3 and EFL 3C furniture locks
> Material: Plastic

Technical Data	
Voltage supply	9.6–14.4 V DC
Current consumption max. (including EFL 3/ EFL 3C)	830 mA
EFL 3 / EFL 3C or MLA 6P connections	RJ10 – socket (6x)
FT 200 / FT 200 CAP connection	Molex socket (1x)
Output current (each EFL 3 OUT)	<500 mA (12 V)
Own consumption	50 mA
Output current (total)	<1000 mA (12 V)
Feedback contact	12 V, 50 mA
Cable length	0.5 m (20") (with AMP plug)
Data cable length	0.5 m (20") (with RJ10 and Molex plug)
Operating temperature	0–50 °C

Color	Item No.
anthracite/light gray	237.59.032

Supplied With
MLA 6P multi-lock adapter
Cable
Data cable to FT 200

Note
Please order mounting material (countersunk head screws 4 x 35 mm (1 3/8") / 4 x 55 mm (2 13/16") separately.

Dimensional data not binding. Dimensions in mm, inches are approximate. We reserve the right to alter specifications without notice.

MLA 6P

→ CC 200

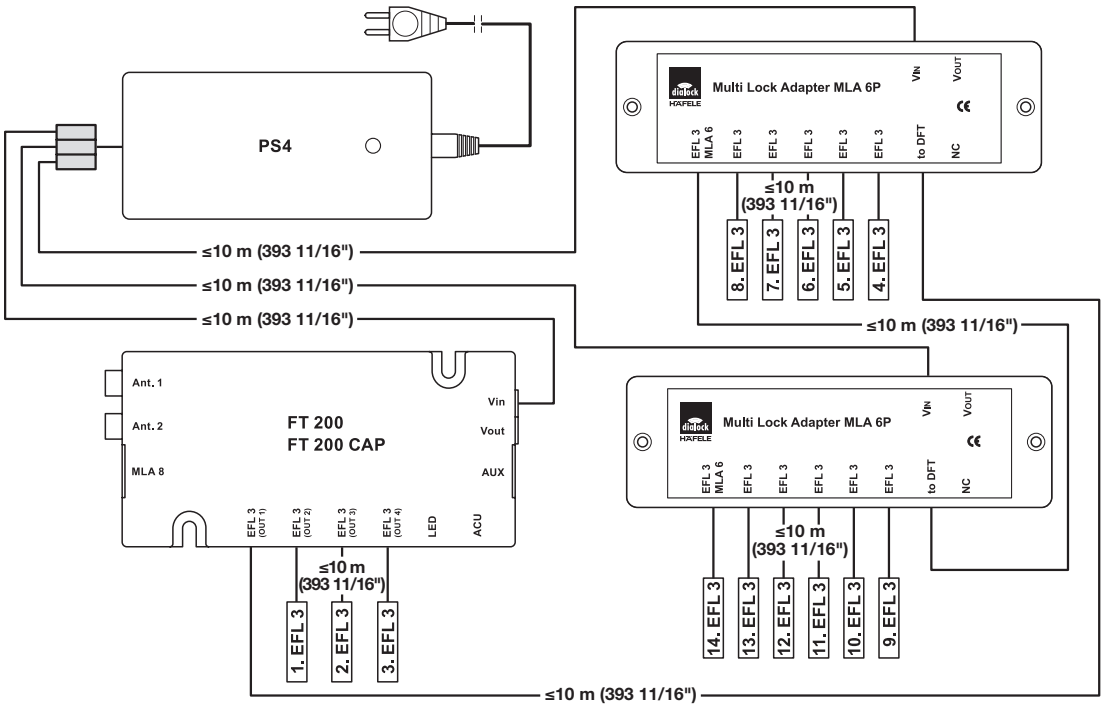

> For connecting an EFL 3 or EFL 3C furniture lock to the MLA 6P multi-lock adapter or the FT 200 furniture terminal
> With mini plug and RJ10 plug
> Color: black

Cable length	Item No.
0.5 (19 11/16")	237.59.020
1 (39 3/8")	237.59.021
3 (118 1/8")	237.59.022
5 (196 7/8")	237.59.023
10 (393 23/32")	237.59.024

Note
Max. cable lengths between electronic components and furniture locks. The EFL 3 feedback contacts for monitoring can be polled through the FT 200 / FT 200 CAP terminals via macros.

Order reference
One CC 200 connection cable is required for each EFL furniture lock. These connection cables are only compatible with the EFL 3 (237.59.000) and EFL 3C (237.59.001) furniture locks of the new generation (see page **10.93**).

Dimensional data not binding. Dimensions in mm, inches are approximate. We reserve the right to alter specifications without notice.

Multi-lock adapter MLA 8

→ For all EFL furniture locks

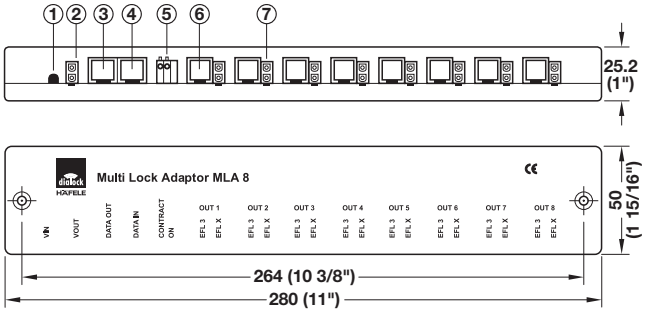

① V_{in} (voltage supply)
② V_{out} (output current)
③ Data out (to other MLA 8)
④ Data in (from FT 200)
⑤ Contact NC (for systems from
⑥ For EFL 3 and EFL 3C 1–8
⑦ LED 1–8 (control light)

> Keyed alike operation up to 16 MLA 8 possible*
> Keyed different operation max. 1 MLA 8 possible*
> LEDs for function control
> Separate power supply
* In this case (cascading), feedback is not possible in combination with the FT 200 furniture terminal!
> Electronic output extender for indoor use: For keyed alike, and/or keyed different EFL 3 / EFL 3C furniture locks
> Programming is carried out outside the furniture, LEDs for function control and error detection next to each of the 8 output ports
> The MLA 8 multi-lock adapter is the link between the FT 200 furniture terminal and the EFL 3 / EFL 3C furniture lock in cases where more than four furniture locks have to be actuated
> The MLA 8 multi-lock adapter uses the incoming data signal from the FT 200 furniture terminal and forwards it to the EFL 3 / EFL 3C furniture locks in the form of a pulse for unlocking/locking

Multi-lock adapter with keyed alike operation
> For 8 EFL 3, EFL 3C furniture locks
> For max. 16 MLA 8 connected in series (132 furniture locks)

Multi-lock adapter with keyed different operation
> For 8 EFL 3, EFL 3C furniture locks
> Max. 1 MLA 8 (8 furniture locks) possible.

Other functions and special features
> Combination of keyed alike and keyed different via FT 200 furniture terminal
> Transfer of feedback contacts (signalling the locking status of EFL 3 / EFL 3C furniture locks. A special macro is available for this application on request.)
> The additional potential free contact at the NC output port signals unlocked furniture locks and can be used by systems from other providers

Notes concerning operation
> Note max. cable lengths, see CC 200 connection cable
> Note connected loads of the system components
> The system can be easily extended later with an additional MLA 8

Technical Data	
Voltage supply	9.6–14.4 V DC
Current consumption max. (including EFL 3/ EFL 3C)	1240 mA
EFL 3 / EFL 3C connections	RJ10 – socket (8x)
FT 200 / FT 200 CAP connections	RJ11 – socket (1x)
Output current (each EFL 3 OUT)	<500 mA (12 V)
Own consumption	130 mA
Output current (total)	<1000 mA (12 V)
Feedback contact	12 V, 50 mA
Cable length	0.5 m (20") (with AMP plug)
Data cable length	0.5 m (20") (with 2 RJ11 plugs)
Operating temperature	0 – 50 °C

Color	Item No.
light gray	237.59.030

Supplied With
MLA 8 multi-lock adapter
Cable
Data cable to FT 200

Note
Please order fixing material (Hospa countersunk head screws 4 x 35 mm (1 3/8") / 4 x 55 mm (2 13/16") separately.

Dimensional data not binding. Dimensions in mm, inches are approximate. We reserve the right to alter specifications without notice.

MLA 8

→ CC 200

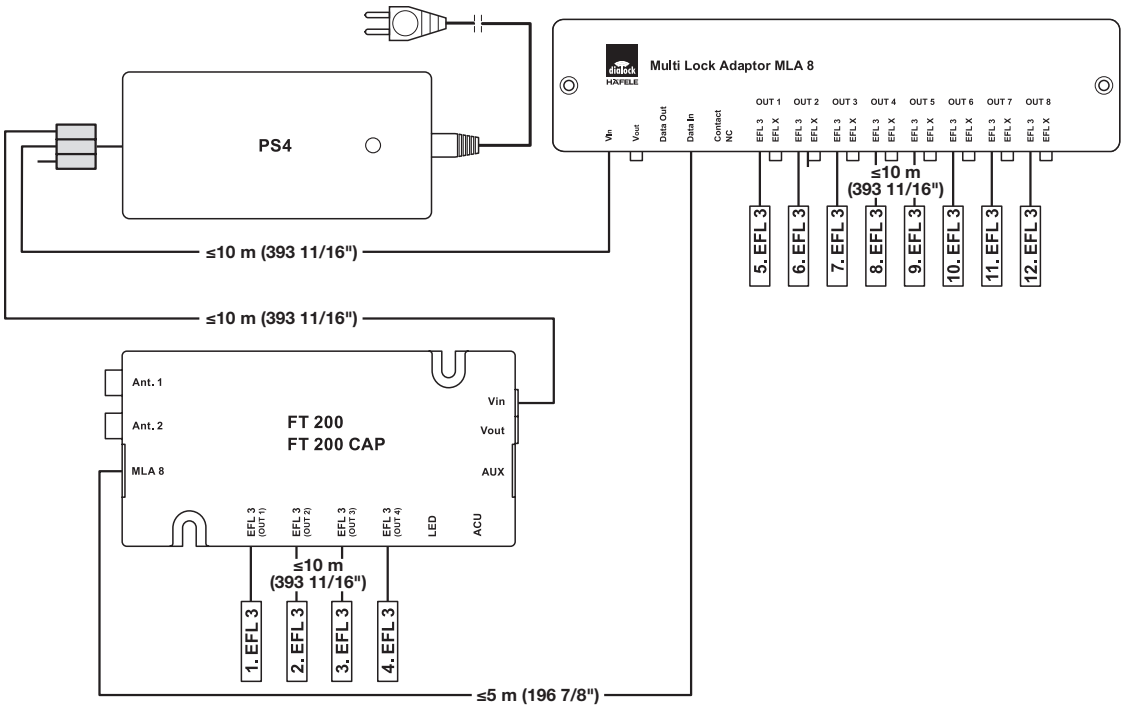

> For connecting an EFL 3 or EFL 3C furniture lock to the MLA 8 multi-lock adapter or the FT 200 furniture terminal
> With mini plug and RJ10 plug
> Color: black

Cable length	Item No.
0.5 (19 11/16")	237.59.020
1 (39 3/8")	237.59.021
3 (118 1/8")	237.59.022
5 (196 7/8")	237.59.023
10 (393 23/32")	237.59.024

Note
The connection cables are only compatible with the EFL 3 (237.59.000) and EFL 3C (237.59.001) furniture locks of the new generation (see page **10.93**).

Order reference
One CC 200 connection cable is required for each EFL furniture lock.

→ AMP Extension cable for secondary side

> For extending cables with AMP plug, from PS 4 power supply unit to FT 200 furniture terminal or to MLA 6P/MLA 8 multi-lock adapter, and for extending the connection leads to EFL 1/EFL 1C, EFL 6 and EFL 41.
> With AMP plug and AMP socket
> Color: black

Cable length	Item No.
2 (78 3/4")	823.28.327
5 (196 7/8")	823.28.351
10 (393 23/32")	823.28.360

→ Data cable MLA 8

> For connecting the MLA 8 multi-lock adapter with the FT 200 furniture terminal
> With 2 RJ11 plugs, cable lengths optional if the data cable (0.5 m (19 11/16") that is supplied with the MLA 8 multi-lock adapter is not suitable
> Color: black

Cable length	Item No.
0.5 (19 11/16")	237.56.360
1 (39 3/8")	237.56.361
2 (78 3/4")	237.56.362
5 (196 7/8")	237.56.365

Dimensional data not binding. Dimensions in mm, inches are approximate. We reserve the right to alter specifications without notice.

CC 140 Distributor

Service+

→ For EFL furniture lock with AMP plug

Distributor with keyed alike operation
> For 6 EFL 6, EFL 41, MLC 1 furniture locks with AMP plug

Notes concerning operation
> Please ensure that a sufficient voltage supply is provided.

> Electric distributor for indoor use
> For keyed alike EFL furniture locks with AMP plug
> With 1 AMP plug, with 6 AMP sockets
> Material: Plastic

Technical Data	
Total length	155 (6 7/64")
Cable length	90 (3 35/64")

Color	Item No.
white	823.28.780

→ Power Supply with Plug 12 VDC 2.5A

> With amp socket, and 1828 mm (72") primary cord
> Capacity: max. of 50 EFL1 locks
> W x D x H: 108 × 58 × 30 mm (4 1/4" × 2 5/16" × 1 3/16")
> Material: Plastic

Technical Data	
AC input voltage	120V ± 15%, 47 – 63 HZ
AC input current	0.6A
DC voltage output	12 VDC ± 5%
Output current range	0 – 2.5A
Operating temp. range	0° – 40°C (32°F – 140°F)

Color	Item No.
black	237.58.149

Note
Powered switches reduce lock capacity. The in-line power supplies are not provided with mounting tabs. They are best placed on a protected shelf or trough.

For details contact Dialock® Department at 1-888-437-7477 or 1-336-889-2322

Dimensional data not binding. Dimensions in mm, inches are approximate. We reserve the right to alter specifications without notice.

EFL 30/30C furniture locks

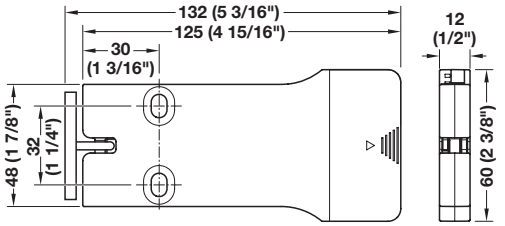

Technical Data	
Technology	Tag-It, Mifare Classic EV1, Mifare Desfire EV1/EV2
BLE (Bluetooth 5) integrated	For start-up and configuration with the Häfele Dialock Manager app for smartphones (available for iOS and Android)
Degree of protection	IP20
Batteries	2 x AAA battery, industrial alkaline, 1.5 V
Battery service life	Up to 20,000 cycles
Number of possible keys	<1000
Operating temperature	0 °C to +55 °C
Humidity	10–95% not condensed
Read range	Card max. 38 mm (1 1/2") Tag max. 28 mm (1 1/8")
Minimum distance from EFL 30 to EFL 30	100 mm (4") (vertical) 150 mm (5 7/8") (horizontal) mounted
Tensile load	1000 N
Dimensions (L x W x D)	126 x 61 x 13 mm (5" x 2 3/8" x 1/2")
Approvals and certifications	CE (Europe), FCC (USA), IC (Canada), EN 61000-4-2 – level 3

Note
In order to avoid interference between locks, a minimum distance of 100 or 150 mm (4" or 5 7/8") must be maintained between installed locks. If the distance is less than this, continuous communication will take place between the locks, which will drain the battery. In order to avoid unnecessary battery drainage, do not insert the battery until start-up takes place. For applications that require a smaller distance, the FT 200 can be used in combination with the EFL 3 instead.

Installation of hinged door:
In order to unlock the EFL 30, the transponder card must be held against the hinged door.

Installation on cabinet:
In order to open the EFL 30, the transponder card must be held against the side of the cabinet.

Installation on drawer:
In order to open the EFL 30, the transponder card must be held against the side of the cabinet.

Note
Please order batteries (Item No. 910.54.953) separately.
Please order programming and clearing key card, Dialock Manager app license or software separately.

- Battery-operated, intelligent locker lock for indoor use: for lockers, wood door cabinets and sliding doors
- Ideal for individual locking points and mobile furniture
- Integration into Dialock software or use of the Dialock Manager app for convenient configuration and administration of locking points and locking authorizations
- Slim and compact design
- Integrated BLE module (Bluetooth Low Energy)
- Material: Housing: Plastic; Locking bolt and locking component: Zinc Alloy
- Color: Black
- For door thickness: <19 mm (3/4")

Standard mode
User keys are allocated to one or several (optional) locks for locking and unlocking. The lock remains open for 3 seconds after opening, then locks again automatically. The door status (locked/open) can be identified with the feedback contact and additional macro which can trigger an alarm. The open time can be adjusted to 1–30 seconds in the basic operation mode using the programming transponder.

Free choice of locker
Every user key can lock an open locker. When opened, the user key is assigned to the selected locker; only this user key can unlock the locker. When the locker is unlocked, the assignment is deleted. The locker number is not stored on the user key.

Toggle mode (deadbolt lock function)
When an authorized transponder is held in front of the device, the lock unlocks and remains unlocked. When the user key is presented again, the lock is locked.

Note
The EFL 30 / EFL 30C can be configured and operated in the standalone mode via the Dialock Manager app or as locking point in the Dialock Software using the programming card and clearing key card.

Version	Item No.
EFL 30 furniture lock	237.59.070
EFL 30C lock with additional feedback contact	237.59.071

Dimensional data not binding. Dimensions in mm, inches are approximate. We reserve the right to alter specifications without notice.

Battery-operated Furniture Locks

→ EFL 30 furniture lock

Installation

Installation of hinged door

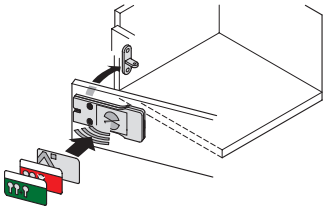

In order to unlock the EFL 30, the transponder card must be held against the hinged door

Installation on cabinet

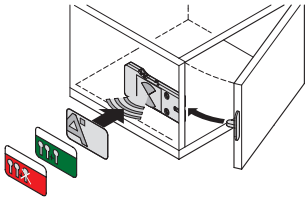

In order to open the EFL 30, the transponder card must be held against the side of the cabinet

Installation on drawer

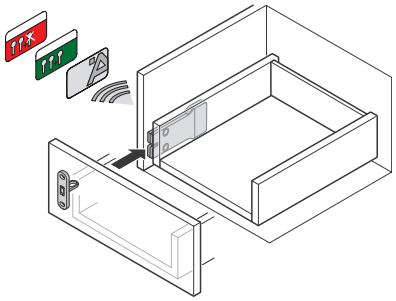

In order to open the EFL 30, the transponder card must be held against the side of the cabinet

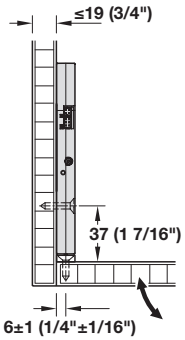

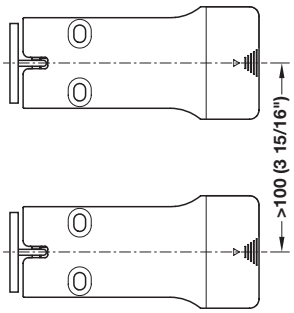

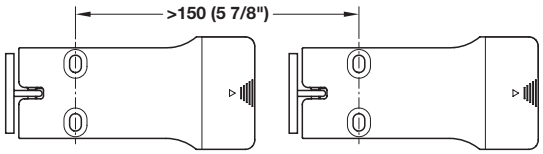

Dimensional data not binding. Dimensions in mm, inches are approximate. We reserve the right to alter specifications without notice.

Step 3

- > Contactless data transmission
- > Read/write transponder
- > No batteries required
- > Insensitive to: Magnetism
  Mechanical vibrations
  Humidity/moisture
  Dust
- > Reusable
- > Forgery proof
- > Utilizes Tag-it™ technology

→ Key Tag – Tag-it™

Fig. shows key tag at full scale

- > This format is water-resistant
- > Solid and impact resistant polycarbonate, ultrasound welded and made waterproof
- > Stainless steel frame
- > Marking possible: Laser engraved numbers or text/logo*
- > For use with all Dialock® Tag-it programming options
- > Read/Write transponder
- > 4 Dialock® segments
- > Ø: 36 (1 7/16")
- > Height: 5.3 mm (3/16")
- > Material: Stainless Steel/Polycarbonate; Finish: matt

Technical Data	
Temperature Range	–35 °C – +50 °C (–31°F – +122°F)
Data Storage	> 10 years

Color	Item No.
black	917.44.143
white	917.44.147
green	917.44.145
red	917.44.149
blue	917.44.148
orange	917.44.141

Note
Programming tools must be purchased separately. The programming tools are introduced when a terminal is first powered. This allows the user to decide how many programming sets are practical for an application.

For details contact Dialock® Department at 1-888-437-7477 or 1-336-889-2322

Dimensional data not binding. Dimensions in mm, inches are approximate. We reserve the right to alter specifications without notice.

Dialock® RFID Keys Tag-it™

> Contactless data transmission
> Read/write transponder
> No batteries required
> Insensitive to: Magnetism
Mechanical vibrations
Humidity/moisture
Dust
> Reusable
> Forgery proof
> Utilizes Tag-it™ technology
> For use with all Dialock® Tag-It

Technical Data	
Temperature Range	–13°F – +140°F
Data Storage	> 10 years

For details contact Dialock® Department at 1-888-437-7477 or 1-336-889-2322

→ Key Card

> ISO Standard
> 4 Dialock® segments
> Suitable for card printers
> L x W x H: 85 × 54 × 1 mm (3 3/8" × 2 1/4" × 1/32")
> Material: Plastic

Color	Item No.
white	917.44.001

→ Key Tag

> Water-resistant
> 4 Dialock® segments
> L x W x H: 56 × 28 × 1.7 mm (2 1/4" × 1 1/8" × 1/16")
> Material: Plastic

Color	Item No.
gray	917.44.085
white	917.44.087

→ Key Wristband

> Water resistant
> 3 Dialock® segments
> Ø: 65 mm × 25 mm (Ø2 9/16" × 1")
> Material: Silicon

Color	Item No.
gray	917.44.295

→ Programming Keys

Delete

Add

> L x W x H: 56 × 28 × 1.7 mm (2 1/4" × 1 1/8" × 1/16")
> Material: Plastic

Color	Item No.
green - add	917.42.003
red - delete	917.42.004

Dimensional data not binding. Dimensions in mm, inches are approximate. We reserve the right to alter specifications without notice.

Recessed Catches

These magnetic catches can be installed ...

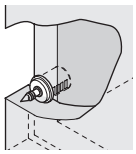

... in the face edge of the cabinet side panel ...

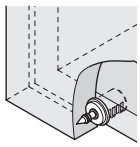

... or cabinet shelf

> For end-drilled installation in cabinet face edges
> Press-fit or glued

→ Catch

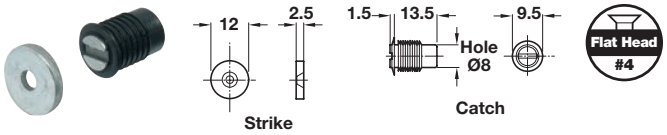

> Catch: press-fit, fixed
> Strike: screw mounted, fixed
> Pull: approximately 2 kg (4.5 lbs)
> Material: Catch: Plastic; Strike: Chromed metal

Color	Item No.
black	246.01.312

→ Catch

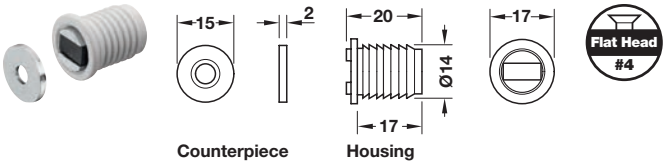

> Catch: press-fit, fixed
> Strike: screw mounted, fixed
> Pull: approximately 3.5 kg
> Material: Catch: Plastic; Strike: Chromed metal

Color	Item No.
white	246.19.702

→ Catch

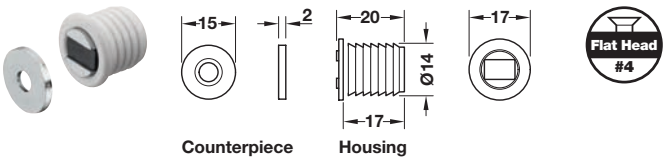

> Catch: press-fit, fixed
> Strike: screw mounted, fixed
> Pull: approximately 4.5 kg
> Material: Catch: Plastic; Strike: Chromed metal

Color	Item No.
white	246.19.701
brown	246.19.101

→ Catch

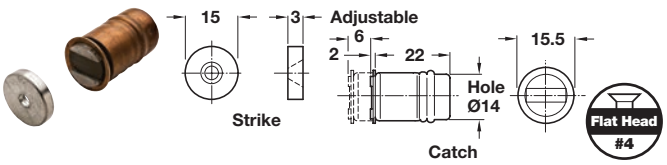

> Catch: glued, adjustable
> Strike: screw mounted, fixed
> Pull: approximately 5 kg (11 lbs.)
> Material: Catch: Brass; Strike: Chromed metal

Finish	Item No.
nickel-plated	246.02.211

Flat head wood screws	page 12.13
Flat head screws	pages 12.7–12.8, 12.10, 12.13

Dimensional data not binding. Dimensions in mm, inches are approximate. We reserve the right to alter specifications without notice.

Catches

→ Catch

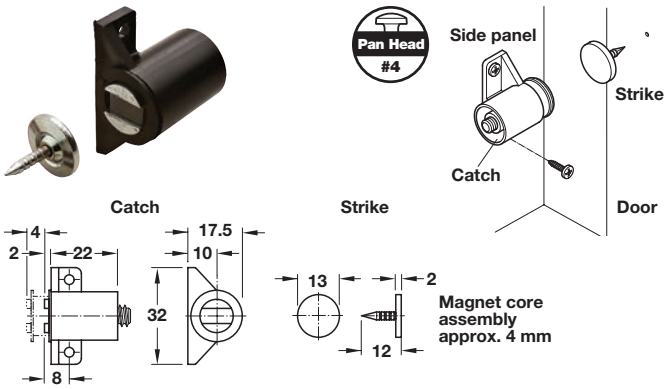

> Screw mounted
> The poles are fixed in the case, while the magnet core is adjustable
> Catch: fixed
> Strike: floating
> Holding power: approximately: 3–4 kg (6.6–8.8 lbs.)
> Material: Catch: Plastic; Strike: Steel

Color	Item No.
black	246.09.309

→ Catch

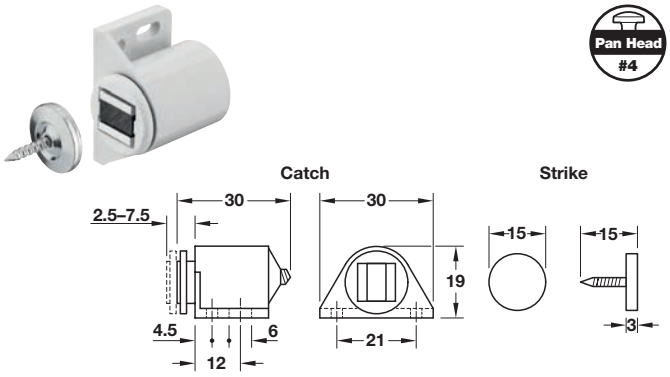

> Screw mounted
> Holding power: 3 kg (6.6 lbs.)
> Magnet adjusts by approx. +4 mm by turning
> Material: Catch: Plastic; Strike: Steel

Color	Item No.
white	246.09.730
brown	246.09.130

→ Catch

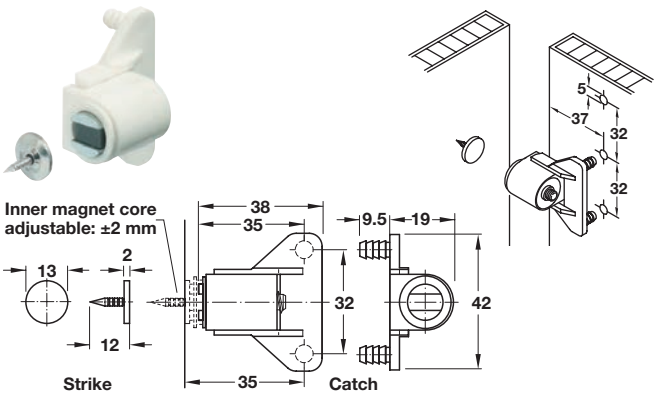

> Press-fit
> Holding power: approximately 4 kg (8.8 lbs.)
> Material: Catch: Plastic; Strike: Steel

Color	Item No.
white	246.13.740

→ Catch

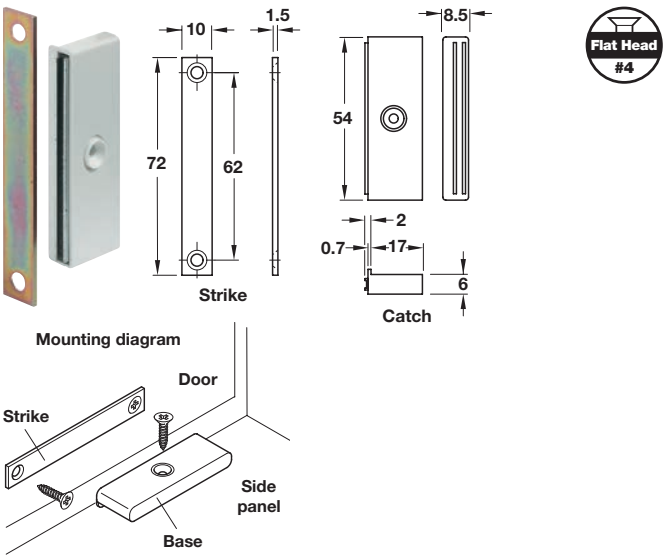

> Screw mounted
> Adjustable
> Floating poles
> Catch: fixed
> Flat (only 6 mm high)
> Holding power: approximately 5 kg (11 lbs.)
> Material: Catch: Plastic; Strike: Steel

Color	Item No.
white	246.50.708
brown	246.50.100

Flat head screws	pages 12.7–12.8, 12.10, 12.13
Pan head screws	pages 12.9–12.10, 12.13

Dimensional data not binding. Dimensions in mm, inches are approximate. We reserve the right to alter specifications without notice.

Catches

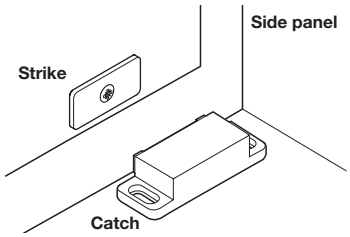

> The most economical magnetic catch
> Extremely flexible floating plates to compensate for alignment tolerances

→ Catch

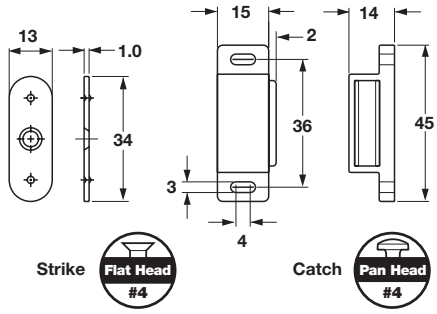

> Screw mounted
> Pull: 2.5 kg (5.5 lbs.)
> Material: Catch: Plastic; Strike: Metal

Color	Item No.
white	246.28.700
brown	246.28.100

→ Catch

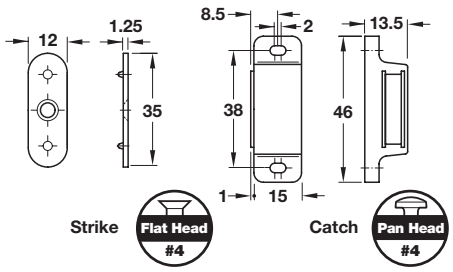

> Screw mounted
> Catch: floating
> Strike: fixed
> Holding power: approximately: 3–4 kg (6.6–8.8 lbs.)
> Material: Catch: Plastic; Strike: Steel

Color	Item No.
white	246.26.702
brown	246.26.104
black	246.26.300

→ Catch

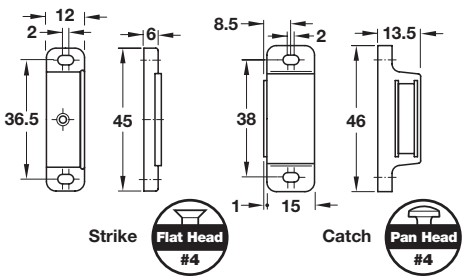

> Screw mounted
> Catch: floating
> Strike: fixed
> Holding power: approximately 4–5 kg (8.8–11 lbs.)
> Material: Catch: Plastic; Strike: Steel

Color	Item No.
white	246.29.712
brown	246.29.114

→ Catch

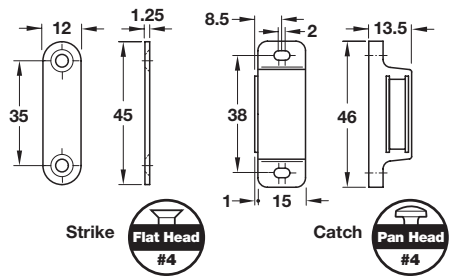

> Screw mounted
> Floating permanent magnet poles catch adjust automatically to meet door-mounted strike
> Catch: floating
> Strike: fixed
> Holding power: approximately 4–5 kg (8.8–11 lbs.)
> Material: Catch: Plastic; Strike: Steel

Color	Item No.
white	246.29.703
brown	246.29.105
black	246.29.301

Flat head screws	pages 12.7–12.8, 12.10, 12.13
Pan head screws	pages 12.9–12.10, 12.13

Dimensional data not binding. Dimensions in mm, inches are approximate. We reserve the right to alter specifications without notice.

Double Catches

> Floating permanent magnet poles in case adjust automatically, to meet door-mounted strike to top or bottom panel of cabinet in two-door installations.

→ Catch

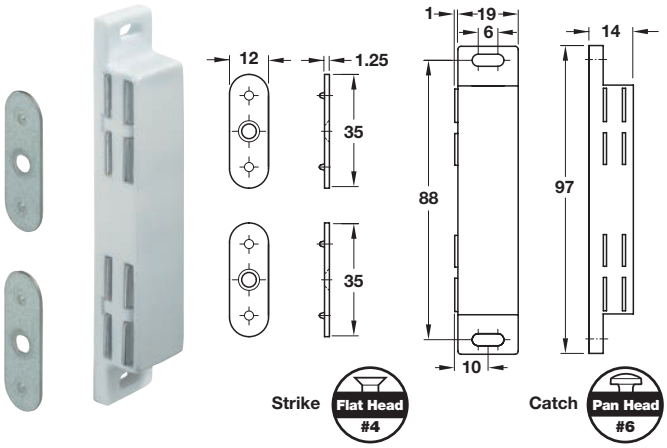

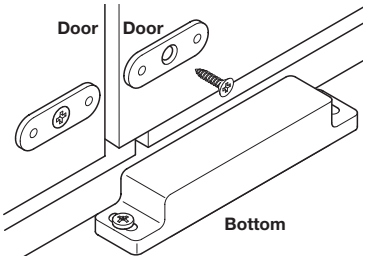

> Screw mounted
> Catch: fixed
> Strike: floated
> Holding power: approximately 2 x 3–4 kg (2 x 6.6–8.8 lbs.)
> Material: Catch: Plastic; Strike: Steel

Color	Item No.
white	246.84.713
brown	246.84.115

→ Catch

> Screw mounted
> Catch: fixed
> Strike: floated
> Holding power: approximately 2 x 3–4 kg (2 x 6.6–8.8 lbs.)
> Material: Catch: Plastic; Strike: Steel

Color	Item No.
black	246.36.300

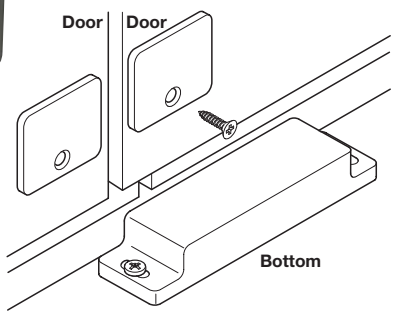

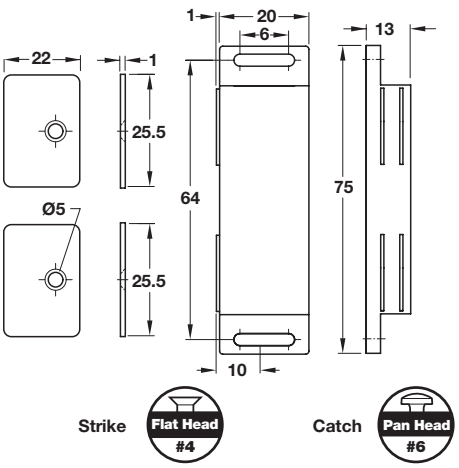

Flat head screws	pages 12.7–12.8, 12.10, 12.13
Pan head screws	pages 12.9–12.10

Dimensional data not binding. Dimensions in mm, inches are approximate. We reserve the right to alter specifications without notice.

Catches

> A high-end magnetic catch specifically designed by Häfele
> Primary application is high-quality traditional cabinetry with inset doors, utilizing free-swinging decorative butt hinges
> Rounded soft shape
> Metal casing and plated finish offer a high-end look and feel
> Easy and intuitive in/out adjustment is achieved by turning the magnet; no need to loosen screws, adjust and re-tighten
> Magnet adjustment range: 5 mm (3/16")
> Magnetic holding force: 2 kg (4.4 lbs)

Note
Matching strike plates and screws are available, please order separately.

→ Single Catch

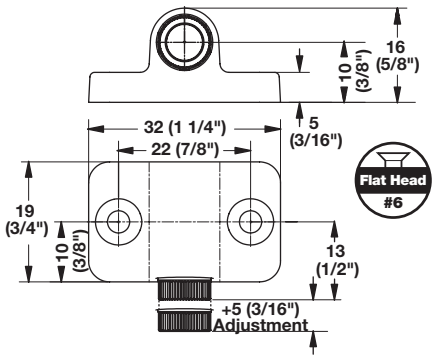

> Material: Housing: Zinc; Core: Steel; Magnet: Neodymium

Finish	Item No.
oil-rubbed bronze	246.15.100
nickel-plated matt	246.15.600

→ Double Catch

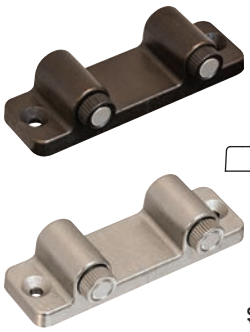

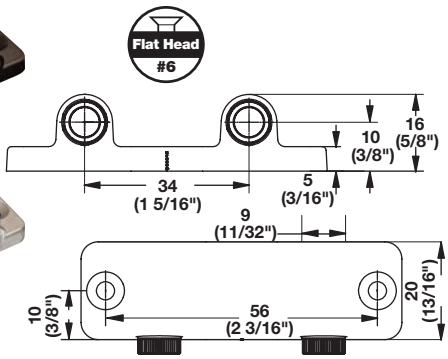

> Material: Housing: Zinc; Core: Steel; Magnet: Neodymium

Finish	Item No.
oil-rubbed bronze	246.15.101
nickel-plated matt	246.15.601

→ Complete Set

> Material: Housing: Zinc; Core: Steel;
Magnet: Neodymium; Strike Plates/Screws: Steel

Finish	Item No.
oil-rubbed bronze	246.15.110
nickel-plated matt	246.15.610

Supplied With
2 Catches
4 Mounting screws
2 Strike plates with floating head/knock-in nail

Note
For above single catch only.

→ Strike Plate

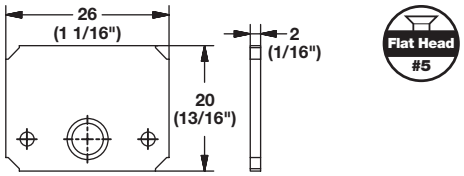

> Material: Steel

Finish	Item No.
oil-rubbed bronze	246.36.180
nickel-plated matt	246.36.680

Note
Order screws separately.

Flat head screws pages 12.7–12.8, 12.10, 12.13

Dimensional data not binding. Dimensions in mm, inches are approximate. We reserve the right to alter specifications without notice.

Catches

→ Spacer

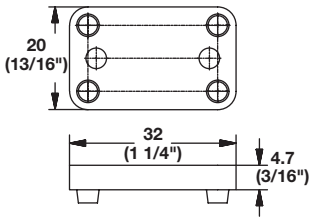

> Provides additional height for mating catch in face frame applications
> Design creates perfect alignment with catch housing
> Screw mounts together with catch
> Material: Plastic

Color	Item No.
gray	246.15.691

→ Screws for Strike Plate

> #5 x 5/8"
> Material: Steel

Finish	Item No.
oil-rubbed bronze	010.77.536
nickel	010.77.604

Supplied With
1000 pcs.

→ Screws for Magnetic Catch

> #6 x 5/8"
> Material: Steel

Finish	Item No.
oil-rubbed bronze	010.77.207
nickel-plated matt	010.77.607

→ Strike Plate for Magnet

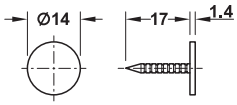

> For knocking in
> Material: Steel, galvanized

Finish	Item No.
oil-rubbed bronze	246.15.190
zinc-plated	246.08.911

Dimensional data not binding. Dimensions in mm, inches are approximate. We reserve the right to alter specifications without notice.

Catches

> Magnet position can be adjusted without changing location of the housing
> Magnet adjustment range: 5.5 mm (3/16")
> Magnetic holding force: 3 kg (6.6 lbs)

→ Adjustable Catch

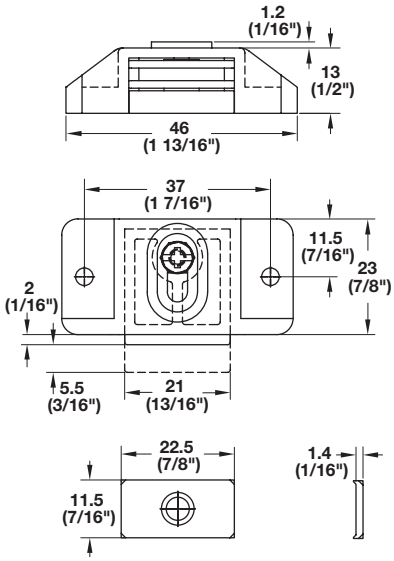

> Material: Catch: Plastic; Strike: Metal

Finish	Item No.
black/bronze	246.65.321
ivory/nickel	246.65.121

Supplied With
Strike Plate
Mounting screws

→ Magnetic Catch

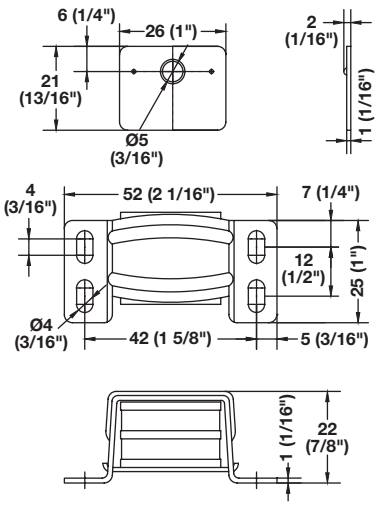

> Screw mounted
> Holding power: 6 kg (13.2 lbs.)
> Material: Catch: Aluminum; Strike: Steel

	Item No.
	246.92.005

Supplied With
Mounting screws

Pan head screws pages 12.9–12.10, 12.13

Dimensional data not binding. Dimensions in mm, inches are approximate. We reserve the right to alter specifications without notice.

Catches

> Hermetically sealed for corrosion resistance
> No metal to metal contact
> Strong magnetic force

→ Catch

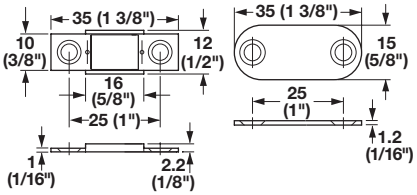

> Ultra thin catch ideal for tight spaces
> Max. temperature: 80° C (176° F)
> To avoid damage, counter plate should not hit magnet
> Screw heads should not protrude above the base plate
> Holding power: approximately 2.7 kg (5.9 lbs.)
> Material: Magnet: Neodymium

Base/Yoke	Item No.
Steel, nickel-plated	246.53.650
Stainless Steel/epoxy	246.53.020

Supplied With Strike plate, 4 pcs. wood screws

→ Catch

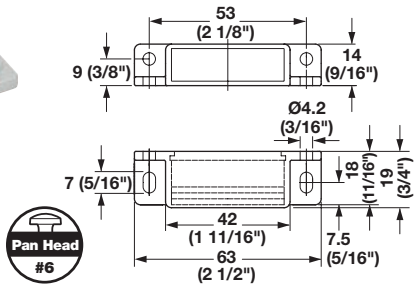

> Holding power: approximately 5 kg (11 lbs.)
> Material: Catch: Polyacetal; Magnet: Neodymium

Color	Item No.
light gray	246.53.522

Note
Optional counter plate – see below.

→ Catch

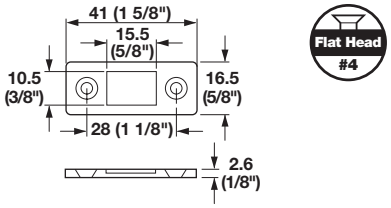

> Ultra thin catch with extra strong magnetic force
> Max. temperature: 80° C (176° F)
> To avoid damage, counter plate should not hit magnet
> Screw heads should not protrude above the base plate
> Material: Magnet: Neodymium

Base/Yoke	Holding Power	Item No.
Steel, nickel-plated	4 kg (8.8 lbs.)	246.53.640
Steel, black	4 kg (8.8 lbs.)	246.53.300
Stainless Steel	4 kg (8.8 lbs.)	246.53.000
Steel, nickel-plated	8 kg (17.6 lbs.)	246.53.600

Note Optional counter plate – see below.

→ Catch

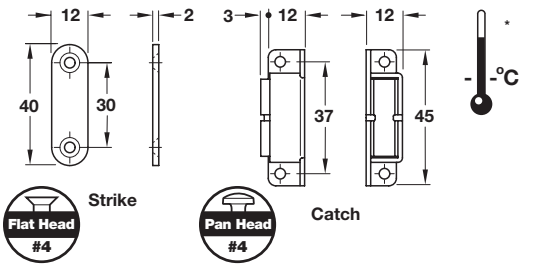

> Screw mounted
> Metal case provides heat-resistance to 300° C.
> Holding power: approximately 5 kg (11 lbs.)
> Material: Catch: Aluminum; Strike: Steel

	Item No.
	246.92.000

Note
Holding power is diminished by 1% per 5° C (+) increase in temperature. Cooling restores the magnet's holding power to its original level. No strike is necessary with steel doors or lids.

→ Counter Plate, optional

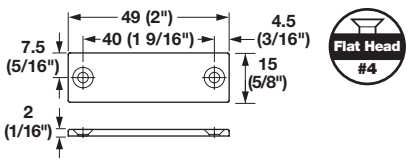

> Material: 316 Stainless Steel, unfinished

	Item No.
	246.53.030

Flat head screws	pages 12.7–12.8, 12.10, 12.13
Pan head screws	pages 12.9–12.10, 12.13

Dimensional data not binding. Dimensions in mm, inches are approximate. We reserve the right to alter specifications without notice.

Catches

→ Catch

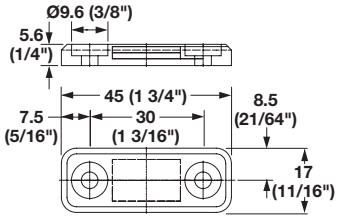

> Hermetically sealed for corrosion resistance
> To avoid damage, counter plate should not hit magnet
> Screw heads should not protrude above base plate
> Holding Power: approx. 3 kg (6.6 lbs.)
> Material: Catch: Plastic; Magnet: Neodymium

Color	Item No.
black	246.53.320
white	246.53.700

Note
Optional counter plate, see right.

→ Counter Plate, optional

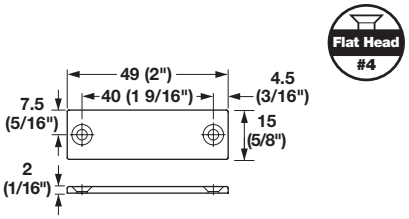

> Material: 316 Stainless Steel, unfinished

Item No.
246.53.030

→ Magnet

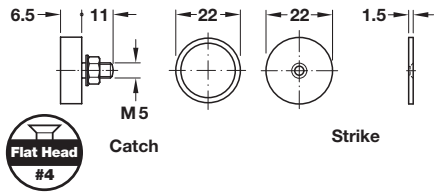

> For metal cabinets
> Holding power: approximately 3 kg (6.6 lbs.)
> Material: Catch: Metal; Strike: Steel

Item No.
246.96.008

→ Magnet

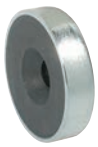

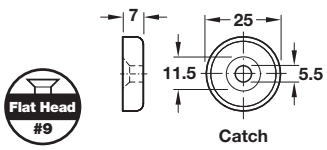

> Screw mounted
> With inside mounting hole
> Low-profile magnet
> For metal cabinets
> Inside mounting Ø5 mm diameter
> No strike needed for metal doors
> Holding power: approximately 3.6 kg (7.9 lbs.)
> Material: Steel

Finish	Item No.
zinc-plated	246.86.025

→ Magnet

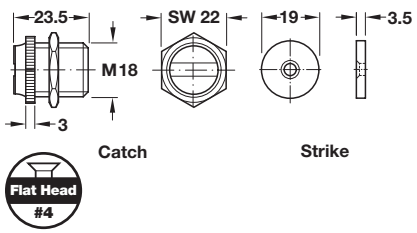

> For metal cabinets
> Holding power: approximately 7 kg (15.4 lbs.)
> Material: Catch: Metal; Strike: Steel

Item No.
246.95.010

Flat head screws pages 12.7–12.8, 12.10, 12.13

Dimensional data not binding. Dimensions in mm, inches are approximate. We reserve the right to alter specifications without notice.

Magnetic Push Catches

→ Push Latch

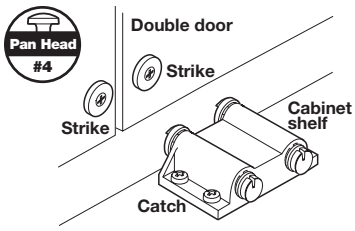

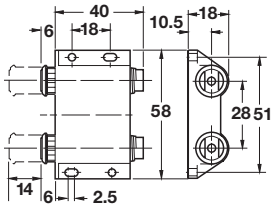

> Screw mounted
> Material: Plastic

Color	Item No.
black	245.80.320

Note
Matching strikes must be ordered separately.

→ Push Latch

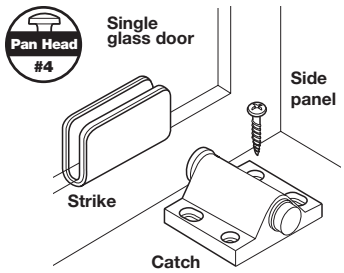

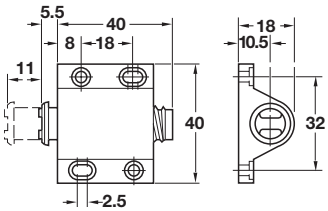

> Screw mounted
> Measurements are approx. ± 0.5 mm
> Material: Plastic

Color	Item No.
black	245.60.389

Note
Matching strikes must be ordered separately.

→ Push Latch

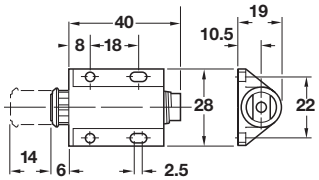

> Screw mounted
> Material: Plastic

Color	Item No.
white	245.60.807

Supplied With
Strike plate
Screws

→ Push Latch

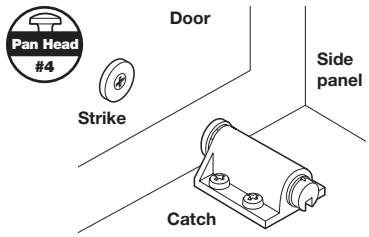

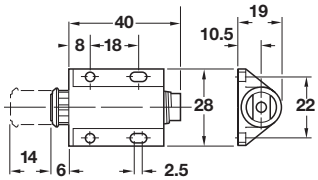

> Screw mounted
> Suitable for wood doors and furniture
> Material: Plastic

Color	Item No.
black	245.80.310

Note
Matching strikes must be ordered separately.

Strikes	pages 10.126–10.127
Pan head screws	pages 12.9–12.10, 12.13

Dimensional data not binding. Dimensions in mm, inches are approximate. We reserve the right to alter specifications without notice.

Magnetic Push Latches

> With a permanent magnet as the retaining element
> The opening and closing functions are similar to those of an automatic spring catch
> Light pressure on the door is sufficient to close it securely, or open it to the extent needed for any further magnetic holding power to be overcome manually
> Special finger pulls allow for push-fit mounting on glass panels, serving as the strike for the magnetic catch.

→ Push Latch

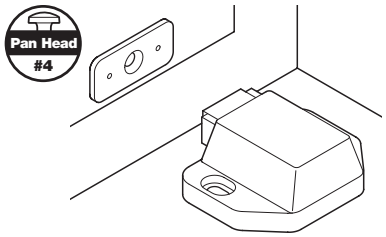

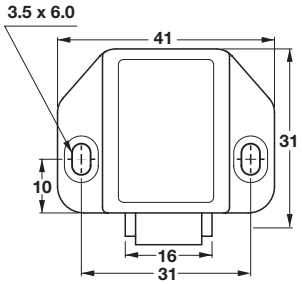

> Screw mounted
> Material: Plastic; Catch: Steel

Color	Item No.
black	245.75.310

Note
Strikes must be ordered separately.

→ Push Latch

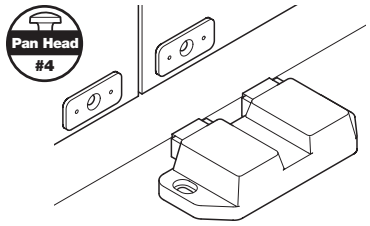

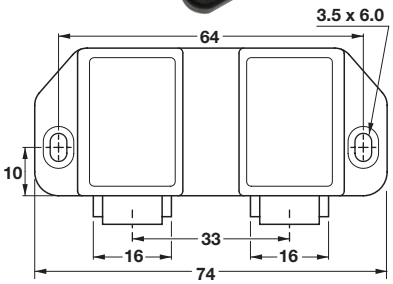

> Screw mounted
> Material: Plastic; Catch: Steel

Color	Item No.
black	245.75.320

Note
Strikes must be ordered separately.

→ Push Latch

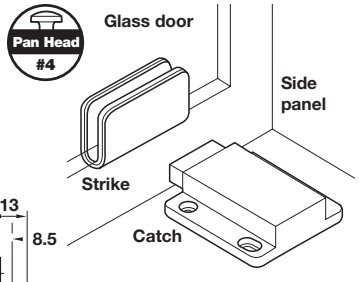

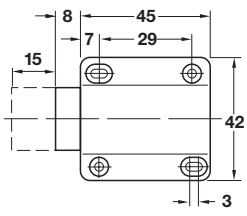

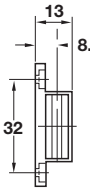

> Screw mounted
> Material: Plastic

Color	Item No.
white	245.61.724
brown	245.61.126
black	245.61.322

Note
Matching strikes must be ordered separately.

Strikes	pages 10.126–10.127
Pan head screws	pages 12.9–12.10, 12.13

Dimensional data not binding. Dimensions in mm, inches are approximate. We reserve the right to alter specifications without notice.

Magnetic Latches

→ Push Latch

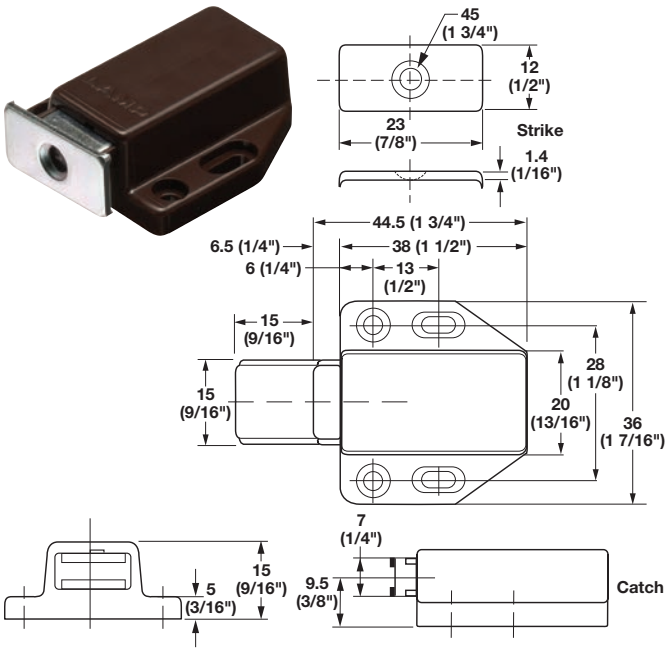

- > With extra long throws
- > Extremely reliable
- > Longer throw (push) than other catches
- > For overlay door, give 3 mm (1/8") gap between door and cabinet frame for pushing space
- > Magnetic pull: 1.4 kg (3 lbs.)
- > Material: Catch: ABS; Strike: Metal; Finish: yellow galvanized

Color	Item No.
white	245.61.730
brown	245.61.330

Supplied With
Screws

→ Push Latch

- > With extra long throw of 40 mm (1 19/32")
- > Longer throw (push) than regular catches
- > Works with thick doors
- > Allows greater clearance for opening the door
- > Magnetic pull: 2.4 kg (5.3 lbs.)
- > Material: Catch: ABS; Strike: Metal; Finish: yellow galvanized

Color	Item No.
white	245.61.740
brown	245.61.140
black	245.61.340

Supplied With
Screws

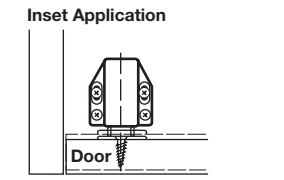

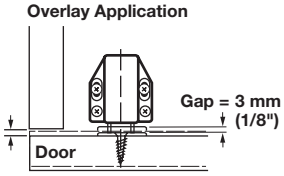

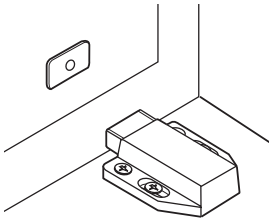

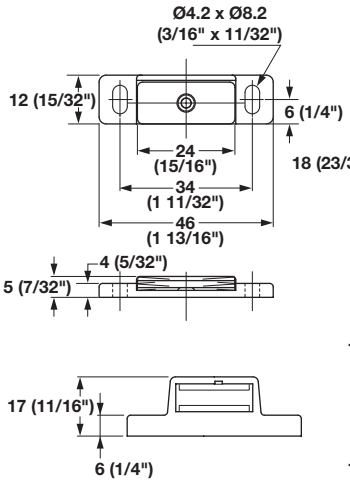

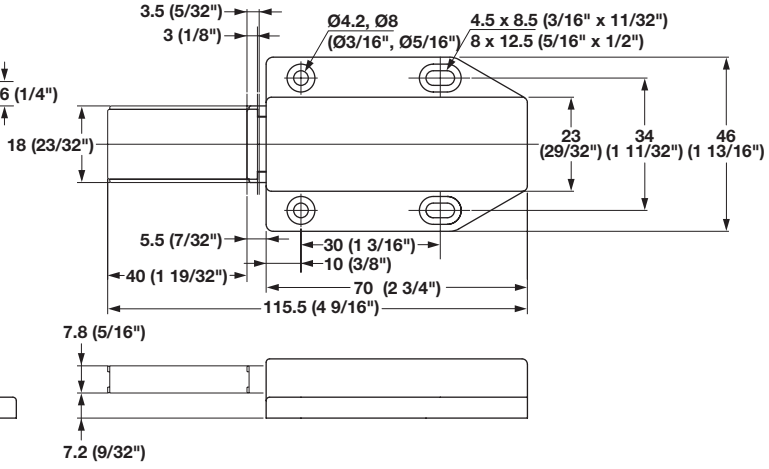

Dimensional data not binding. Dimensions in mm, inches are approximate. We reserve the right to alter specifications without notice.

Strikes

→ Strike

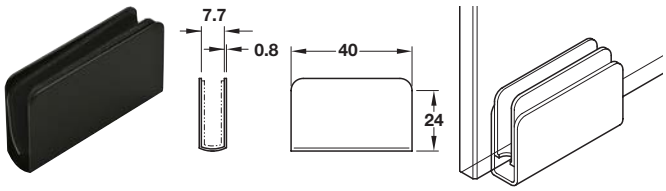

> For glass doors 5–6 mm (7/32"–1/4") thick in combination with automatic spring catches
> Material: Steel, bonded to self-adhesive foam

Finish	Item No.
black	245.63.326
chrome-plated	245.63.228

Note
Remove protective backing and attach foam liner to the glass door, then push the strike or finger pull into the pad.

→ Strike

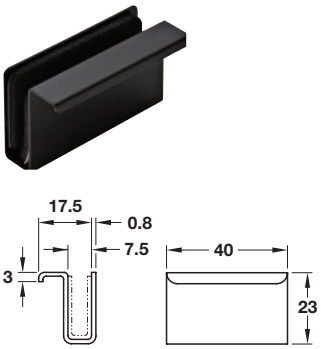

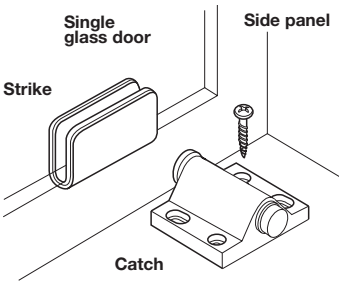

> For glass doors 5–6 mm (7/32"–1/4") thick in combination with automatic spring catches
> Material: Steel, bonded to self-adhesive foam

Finish	Item No.
black	245.63.335
chrome-plated	245.63.237

Dimensional data not binding. Dimensions in mm, inches are approximate. We reserve the right to alter specifications without notice.

Strikes

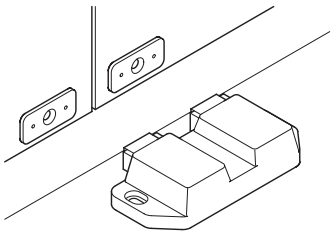

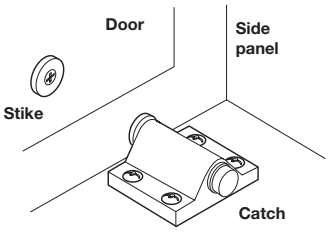

Flat Head #4

→ Strike

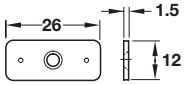

> Screw mounted
> For wood doors, in combination with automatic spring or magnetic catches
> Material: Steel

Finish	Item No.
zinc-plated	245.63.998

→ Strike

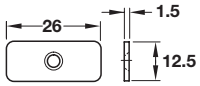

> Screw mounted
> For wood doors, in combination with automatic spring or magnetic catches
> Material: Steel

Finish	Item No.
bronzed	245.63.292

→ Strike

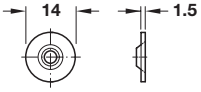

> Screw mounted
> For wood doors, in combination with magnetic catches
> Material: Steel

Finish	Item No.
galvanized	245.63.988

→ Strike

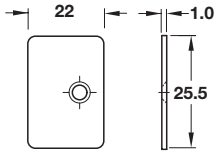

> Screw mounted
> For wood doors, in combination with automatic spring or magnetic catches
> Material: Steel

Finish	Item No.
bronzed	246.36.390

Flat head screws pages 12.7–12.8, 12.10, 12.13

Dimensional data not binding. Dimensions in mm, inches are approximate. We reserve the right to alter specifications without notice.

K Push Tech Concealed

> Push system for opening doors without handles
> Mechanism provides a silent, powerful operation
> Suitable for a wide range of doors
> For recess mounting in a Ø10 mm (3/8") hole or surface mounting
> Available either with magnet or with buffer:
Magnet version for cabinets using free-swinging or negative hinges
Buffer version for cabinets using spring hinges
> Engineering plastic material with magnet or rubber buffer

→ K Push Tech Concealed - Short

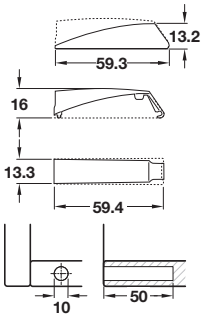

Recess mounted - short

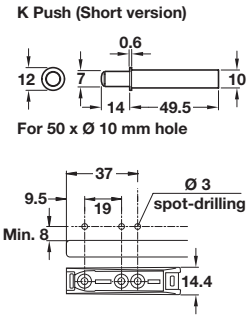

Surface mounted - short

> 14 mm (9/16") throw
> Material: Plastic

Version	white	anthracite
With magnet	356.12.700	356.12.300
With buffer	356.12.710	356.12.310
Housing	356.12.720	356.12.320
Mounting plate	356.12.725	356.12.325

→ Strike Plate for magnet

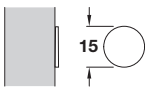

> Self-adhesive
> Material: Steel

Finish	Item No.
satin chrome	356.01.539

→ Installation Tool

> Installation aid for recess drilling or surface mounting
> Material: Plastic

Color	Item No.
red	356.12.099

→ K Push Tech Concealed - Long

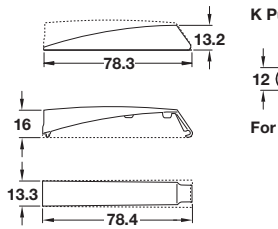

Recess mounted - long

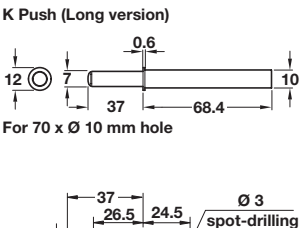

Surface mounted - long

> 37 mm (1 1/2") throw
> Material: Plastic

Version	white	anthracite
With magnet	356.12.705	356.12.305
Strong w/magnet	356.12.706	356.12.306
With buffer	356.12.717	356.12.317
Strong w/buffer	356.12.718	356.12.318
Housing	356.12.722	356.12.322
Mounting plate	356.12.723	356.12.323

Note
Order housing and mounting plate fittings separately for surface mounting.

→ Strike Plate for magnet

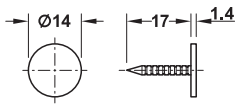

> For knocking in
> Material: Steel, galvanized

	Item No.
	246.08.911

Dimensional data not binding. Dimensions in mm, inches are approximate. We reserve the right to alter specifications without notice.

K Push Tech Concealed

→ Drilling Jig

> For material thickness 16 mm (5/8") and 18 mm (3/4")
> 1 mm and 1.5 mm shim included
> Material: Aluminum/Steel

Color	Item No.
red	356.12.090

→ Drillbit

> Ø10 mm (3/8")
> Material: Carbide

	Item No.
	001.24.319

→ Stop Ring

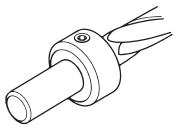

> Ø10 mm (3/8")
> Material: Steel

	Item No.
	001.42.693

Dimensional data not binding. Dimensions in mm, inches are approximate. We reserve the right to alter specifications without notice.

Non-Magnetic Catches

→ Compact Catch

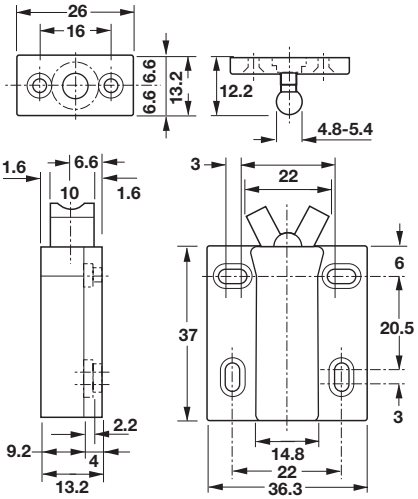

> The strike consists of two parts allowing for easy adjustment even after the body is attached
> Lower holding power
> Holding power: 3 kg (6.6 lbs.)
> Material: Plastic

Color	Item No.
black	245.50.310

Supplied With
6 Screws

→ Pressure Catch

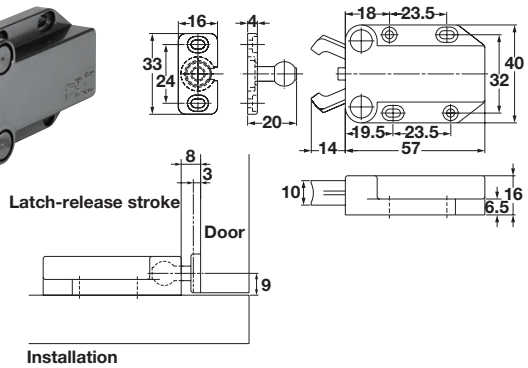

> Based on the same concept as that of a magnetic catch
> A gentle push is all it takes to open or close door
> Especially suited for use where magnets would be harmful
> Cannot be pulled or pushed open from the inside by falling objects
> Holding power: 8 kg (17.6 lbs.)
> Material: Plastic

Color	Item No.
black	245.50.301

Supplied With
6 Screws

→ Flexi-touch Drawer Latch

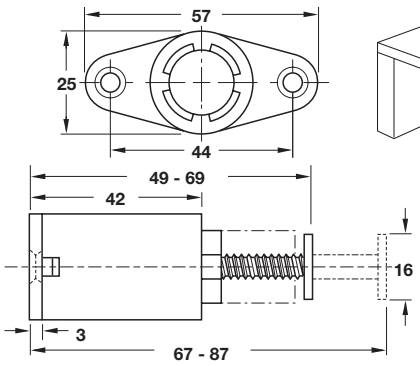

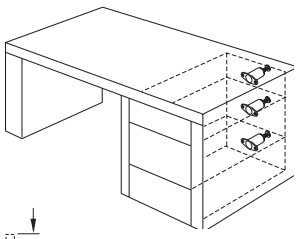

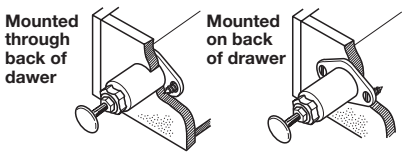

> Spring latch releases drawer with the touch of a finger
> Attachable on the back or through the back of drawer
> Not for overlay drawer fronts
> Not recommended for self-closing ball bearing slides
> Material: Plastic

Color	Item No.
beige	245.52.403

Supplied With
Screws

Dimensional data not binding. Dimensions in mm, inches are approximate. We reserve the right to alter specifications without notice.

Spring Catches

→ Catch

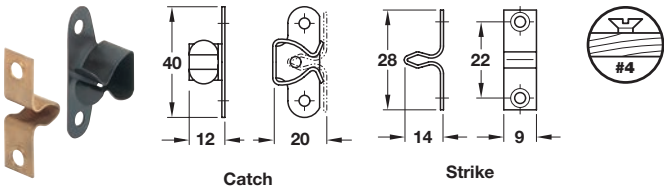

> Material: Spring Catch: Steel, blue tempered
> Strike: Steel; Finish: brass-plated

	Item No.
	245.06.509

→ Catch

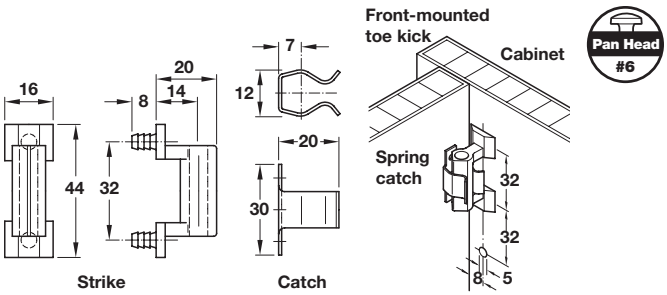

> 32 mm (1 1/4")
> With press-in strike
> Material: Spring catch: Steel, chromatized
> Strike: Nylon; Color: white

Description	Item No.
Strike	245.07.784
Catch	245.07.800

→ Retaining Spring

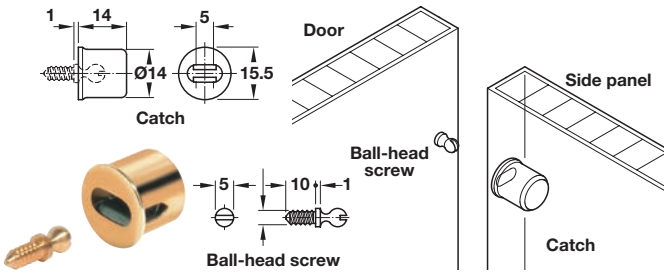

> With ball-head mounted screw and press-fit catch
> Material: Steel; Screw: Brass, bright

Finish	Item No.
brass-plated	241.90.501

→ Catch

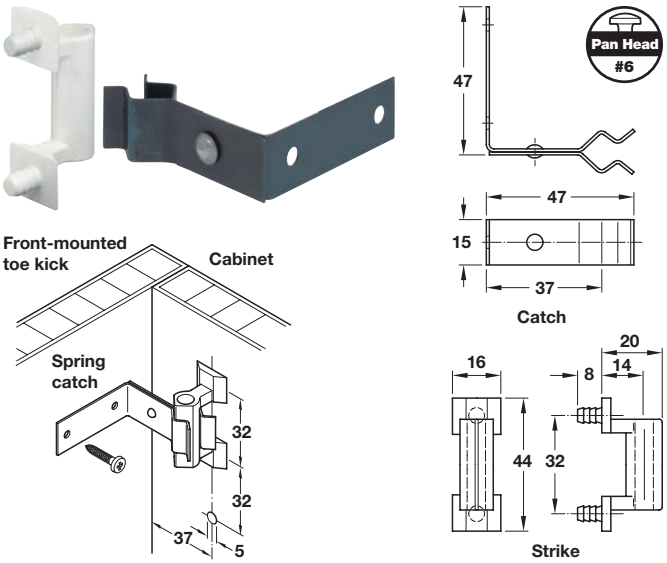

> 32 mm (1 1/4")
> With press-in catch
> Material: Spring catch: Steel, blue tempered
> Strike: Nylon; Color: white

Description	Item No.
Strike	245.07.784
Catch	245.07.793

→ Catch

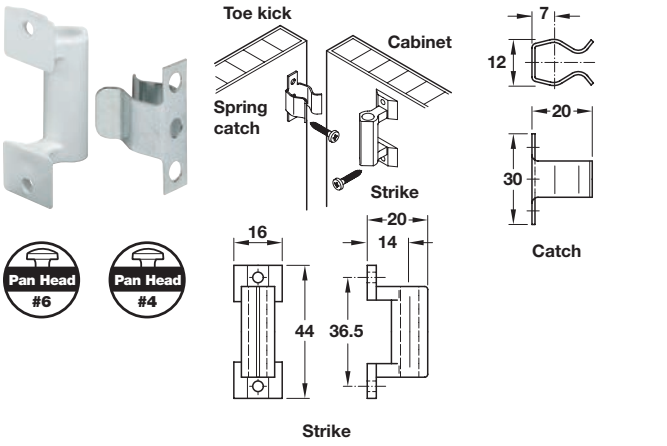

> With screw mounted strike
> Material: Spring catch: Steel, chromatized
> Strike: Nylon; Color: white

Description	Item No.
Strike	245.07.775
Catch	245.07.800

Flat head wood screws	page 12.13
Pan head screws	pages 12.9–12.10, 12.13

Dimensional data not binding. Dimensions in mm, inches are approximate. We reserve the right to alter specifications without notice.

Ball Catches with Strikes

→ Ball Catch

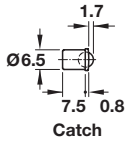

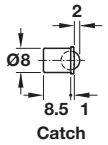

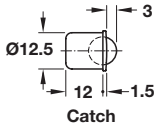

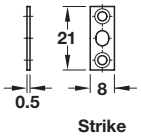

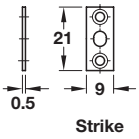

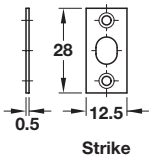

> Press-fit
> Material: Ball: Steel; Finish: chrome; Catch and Strike: Steel

Finish	Item No.	Item No.	Item No.
brass-plated	241.80.505	241.80.514	241.80.541

→ Ball Catch

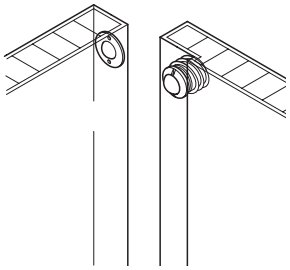

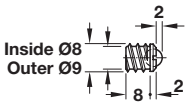

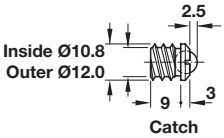

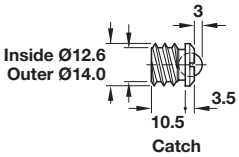

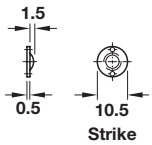

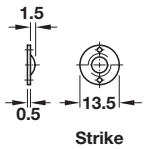

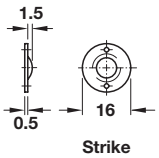

> Screw mounted
> Material: Ball: Steel; Finish: chrome; Catch and Strike: Steel

Finish	Item No.	Item No.	Item No.
brass-plated	241.86.105	241.86.114	241.86.123

Flat head wood screws	page 12.13
Round head metal brads	page 12.13

Dimensional data not binding. Dimensions in mm, inches are approximate. We reserve the right to alter specifications without notice.

Ball Catches

→ Twin Catch

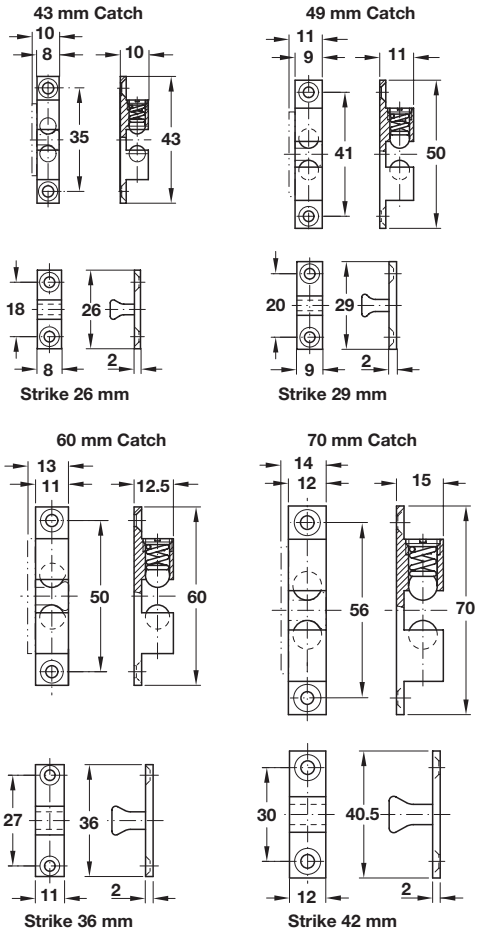

> Screw mounted
> Material: Brass, polished; Ball: Steel-plated

Length	Item No.
43 (1 11/16")	244.20.014
50 (2")	244.20.015
60 (2 3/8")	244.20.016
70 (2 3/4")	244.20.017

→ Twin Catch

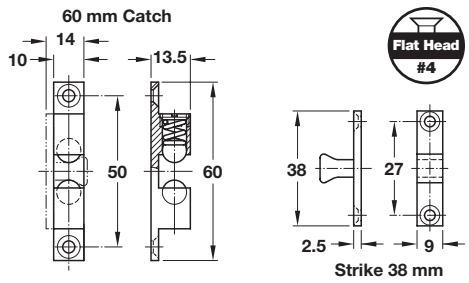

> Screw mounted
> Material: Brass, polished; Ball: Steel-plated

	Item No.
	244.20.120

Flat head screws pages 12.7–12.8, 12.10, 12.13

Dimensional data not binding. Dimensions in mm, inches are approximate. We reserve the right to alter specifications without notice.

Roller Catches

→ Catch

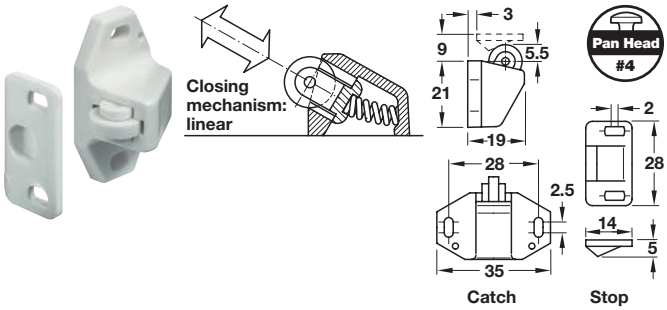

> Screw mounted
> Material: Roller: Nylon; Base and Stop: Plastic; Color: white

Description	Item No.
Roller catch	243.15.700
Stop	243.15.790

Note
Must order parts separately

→ Double Catch, Low Back

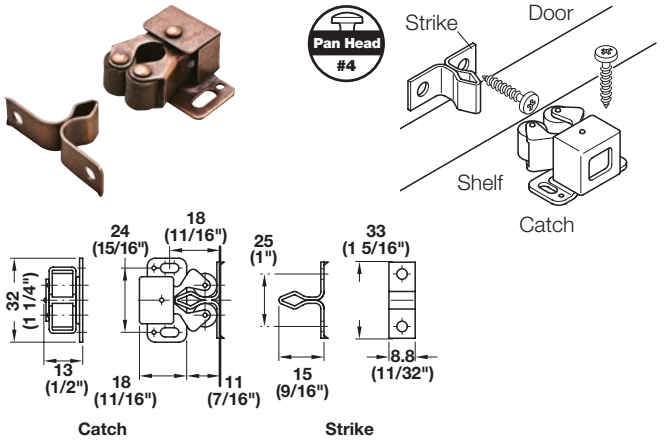

> Push-in force: 1.8-2.0 kg (3.9-4.4 lbs.)
> Pulling force: 1.0-1.2 kg (2.2-2.6 lbs.)
> Material: Roller: Nylon; Strike and Catch: Steel

Finish	Item No.
bronzed	244.01.107
galvanized	244.01.901

→ Double Catch, Low Back

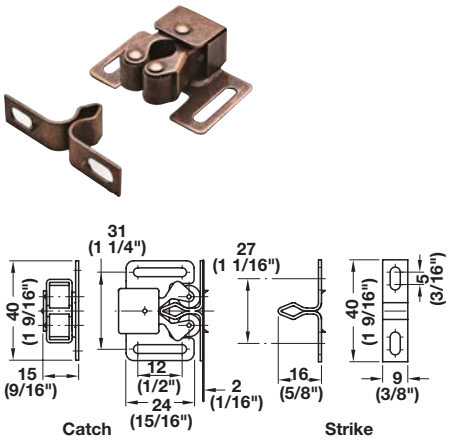

> With oblong holes on catch and strike for wide adjustment range
> Can be used on face frames
> Material: Roller: Nylon; Strike and Catch: Steel

Finish	Item No.
bronzed	244.04.100

→ Double Catch, Stainless Steel

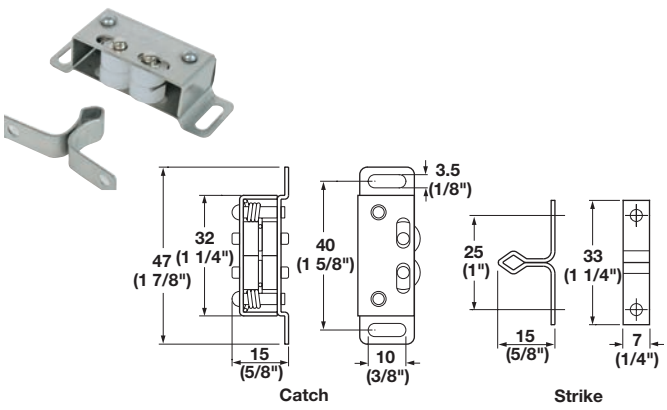

> With oblong holes on catch for adjustability
> Push-in force: 1 kg (2.2 lbs.)
> Pulling force: 2.7 kg (6 lbs.)
> Material: Stainless Steel, unfinished
Roller: Polyethylene; Color: white

	Item No.
	245.50.010

Pan head screws pages 12.9–12.10, 12.13

Dimensional data not binding. Dimensions in mm, inches are approximate. We reserve the right to alter specifications without notice.

Knuckle Catches

→ K-Catch

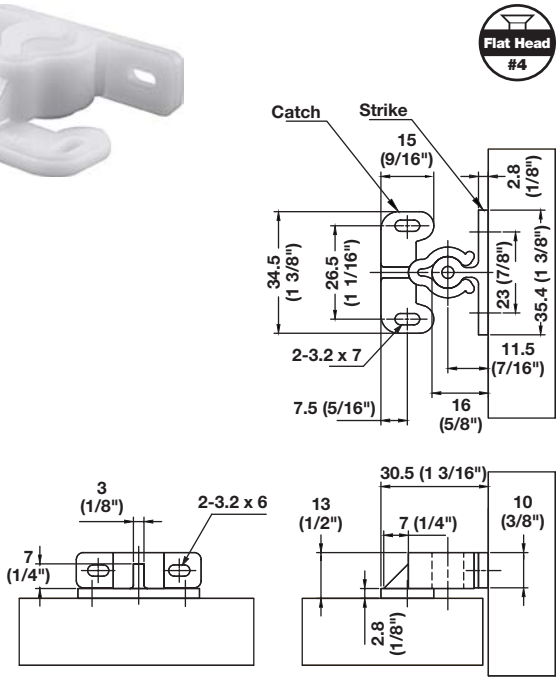

> Grabs and holds doors tightly
> Screw mounted
> Material: Plastic

Color	Item No.
white	245.50.304

Dimensional data not binding. Dimensions in mm, inches are approximate. We reserve the right to alter specifications without notice.

This page is left blank intentionally.

Dimensional data not binding. Dimensions in mm, inches are approximate. We reserve the right to alter specifications without notice.

Automatic Spring Catches

→ Mini-Latch

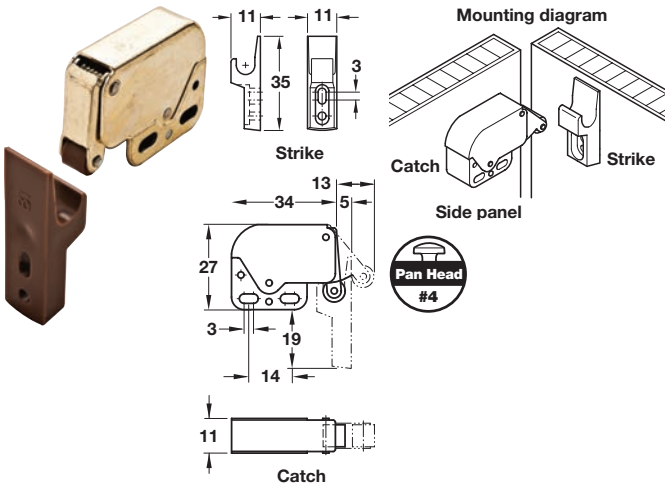

> Screw mounted
> The release function can be activated with light pressure on the door
> Door opens automatically
> To close door light pressure against door is required
> Material: Catch: Plastic/Steel combination; Strike: Plastic

Finish	Item No.
nickel-plated	245.54.701
brass-plated w/Häfele logo	245.54.514
stainless steel	245.54.707

→ Quick-Latch

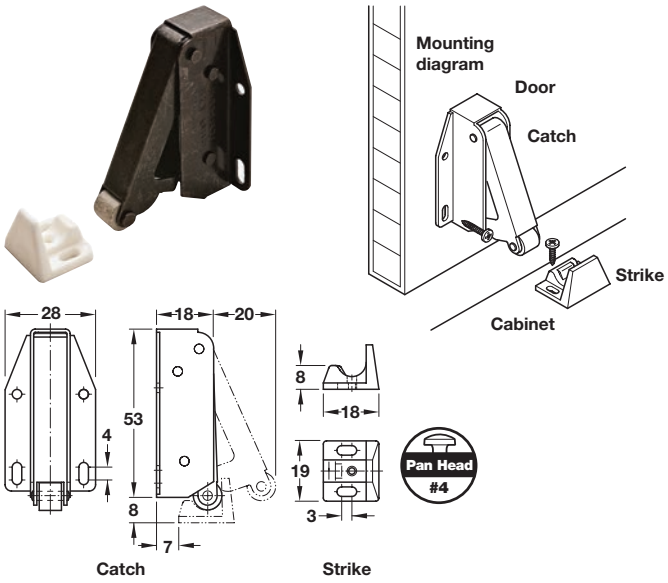

> Screw mounted
> Material: Catch: Steel; Strike: Plastic; Color: white

Finish	Item No.
bright galvanized	245.55.913
bronzed	245.55.100

Pan head screws pages 12.9–12.10, 12.13

Dimensional data not binding. Dimensions in mm, inches are approximate. We reserve the right to alter specifications without notice.

Elbow Catches

→ Deluxe Catch

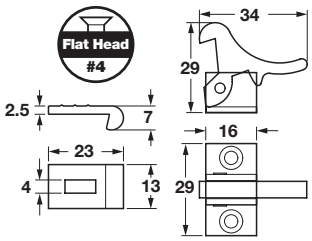

> Nonhanded: use left or right
> Rugged
> Spring-loaded
> Quiet secure engagement of strike
> Material: Brass

Finish	Item No.
brass	245.74.000
chrome-plated	245.74.200

→ Economy Catch

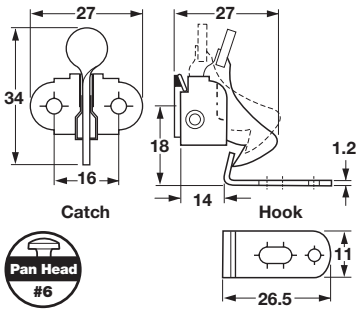

> Screw mounted
> Stamped steel
> Oblong adjustment hole
> Spring-loaded
> Material: Steel

Finish	Item No.
bronzed	245.70.107
brass-plated	245.70.509

Flat head screws	pages 12.7–12.8, 12.10, 12.13
Pan head screws	pages 12.9–12.10

Dimensional data not binding. Dimensions in mm, inches are approximate. We reserve the right to alter specifications without notice.

Furniture Bolts

→ Threaded Bolt

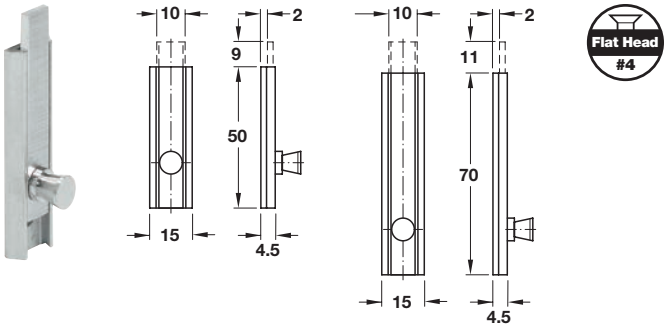

Mounting directions

1. Unscrew the threaded knob so that the screw holes are exposed.
2. The guide can now be installed. Return the slide and screw into place.

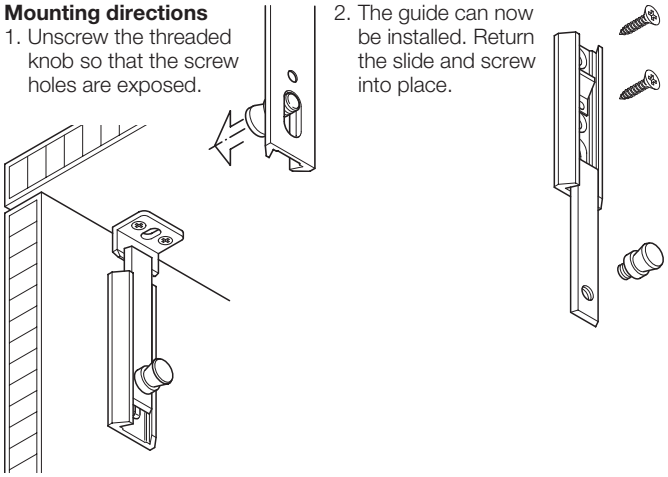

> With concealed screw holes
> With straight slide
> Material: Solid Brass; Finish: chrome matt

Height	Item No.
50 (2")	252.01.629
70 (2 3/4")	252.01.647

→ Strike

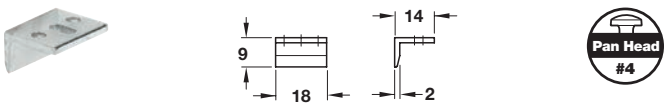

> Plain bracket and 3 screw holes
> Material: Brass

Finish	Item No.
nickel-plated	251.60.703

Flat head screws	pages 12.7–12.8, 12.10, 12.13
Pan head screws	pages 12.9–12.10, 12.13

→ Threaded Bolt

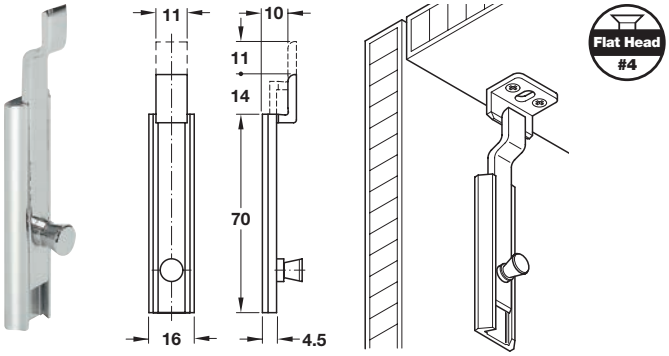

> With concealed screw holes
> With cranked slide
> Material: Brass

Finish	Item No.
chrome polished	252.02.644

→ Threaded Bolt

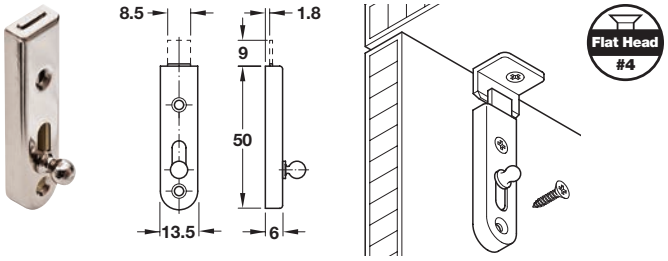

> With straight slide
> Screw mounted
> Material: Steel

Finish	Item No.
nickel-plated	251.01.106

→ Threaded Bolt

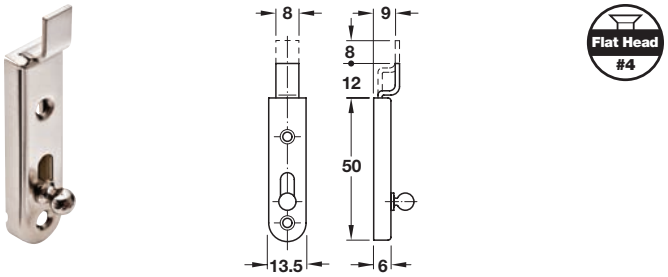

> With cranked slide
> Screw mounted
> Material: Steel

Finish	Item No.
nickel-plated	251.02.103

Dimensional data not binding. Dimensions in mm, inches are approximate. We reserve the right to alter specifications without notice.

11

HÄFELE

CONNECTORS AND SHELF SUPPORTS

Cabinet Connectors

Häfele Rafix 20 System Overview 11.4
Rafix 20 Housing 11.5
Rafix 20 Flush Fitting 11.6
Capfix for Rafix 11.7
Rafix 20 TAB Housing 11.8-11.9
Rafix SE 32 Dowel Stud 11.10
Rafix Connecting Bolts 11.11–11.15
Rafix Installer Kits/Futura 250 Rafix Machine 11.16-11.18
Häfele Minifix® System Overview 11.19
Minifix Cams/Connecting Bolts 11.20-11.24
Minifix Miter Joint Connectors 11.25
Minifix Drilling Jig 11.26
Capfix for Minifix 11.27
Häfele Maxifix® System
Maxifix Connector Housing and Bolts 11.28-11.29
Red Jig 11.30-11.31
Häfele Ixconnect
K 32/20 Connector 11.32
SC 8/25 Connector 11.33
SC 8/60 Drilling Jig 11.34
RPC G 13/20 Rear Panel Connector 11.35
RPC S 15/25 Rear Panel Connector 11.35
CC 8/5/30 Connector 11.36
RPC D 5/24 Rear Panel Connector 11.37

Lamello Cabineo 11.38-11.39
DC-25 Dowel/Cam Connector 11.40
Confa 35 Universal Connector 11.41
Quick Dowel 11.42
Surface Mounted Connectors 11.43
Confirmat 11.44-11.46
Confir-Plan Universal Connector 11.47

Shelf Connectors

Häfele Ixconnect
Tab 15 11.48
Tab 18 11.49
Rasant-Tab 11.50

Maori Shelf Connector 11.51
Dovetail Connector 11.52
Modular Connector Fittings 11.53-11.54

Biscuit Connectors/Dowels

Lamello
Tenso 11.55
Clamex P 11.56-11.57
Divario 11.58
P-System Starter Kits 11.59
Divaro Starter Kit 11.60
Classic X/Zeta P2 11.61
Top 21 11.62
K20/Bisco P-14 11.63

Wood Biscuits 11.63
Panel Expansion Inserts 11.63
Wood Dowels 11.64
EXACT Dowel 11.64

Brackets

Connecting Brackets 11.65-11.71
Connecting Plates/Pins 11.72-11.73
Panel Clips 11.74
Toe Kick Brackets 11.75
False Front Connectors 11.76-11.77
Corner Brackets 11.77

Dimensional data not binding. Dimensions in mm, inches are approximate. We reserve the right to alter specifications without notice.

Work Surface Connectors

Zipbolt ____ 11.78-11.80
Recessed Worktop Connector ____ 11.81
QUICK Worktop Connector ____ 11.82
Flipbolt/J-Hook ____ 11.83

Panel Connectors

Ixconnect Keku System ____ 11.84-11.85
Button-fix Panel Connecting Fittings ____ 11.86-11.88
Fastmount Panel Mounting System ____ 11.89-11.91
Uni-Connector ____ 11.92
Speaker Panel Connector ____ 11.92

Special Connectors

Giro-bolt Lock ____ 11.93
Two-piece/Miter Joint Connectors ____ 11.94

Bed Connectors

Keyhole Plates ____ 11.95
Berliner Bed Fittings ____ 11.96
Connecting Brackets/Noval K Fitting ____ 11.97
TOMMO Bed Fittings ____ 11.98
Double Fitting ____ 11.98
Scissor Jacks ____ 11.99

Furniture Connectors

Universal Connector ____ 11.100
Rack Connectors ____ 11.101-11.102
Upholstery Ganging Devices ____ 11.103
Cross Dowels/Joint Connectors/JCN Bolts ____ 11.104
Sleeve Connectors ____ 11.105
Snaptoggle Bolts ____ 11.106
Anti-Tip Kits ____ 11.106
Mirror Fittings ____ 11.107
Multi-Purpose Connectors ____ 11.108-11.109
Spreading Dowels ____ 11.110

Cabinet Shelf Supports

Supports for Wood Shelves ____ 11.111-11.117, 11.120-11.121
Mullion Shelf Clip ____ 11.118
Kintai Shelf Support ____ 11.119
Supports for Glass Shelves ____ 11.122-11.123, 11.125-11.126
Shelf Hold-Downs ____ 11.124
PEKI/KUBIC Shelf Supports ____ 11.127
KRISTAL Shelf Supports ____ 11.128

Wall Mounted Shelf Supports

Glass Shelf Support ____ 11.129
Wood Shelf Support ____ 11.129
Concealed Shelf Support Systems ____ 11.130
TRIADE Concealed Shelf Support System ____ 11.131-11.135
Clamping Bracket ____ 11.136
KALABRONE Glass Shelf Supports ____ 11.137
SpeedBrace Brackets ____ 11.138
SpeedBrace Stealth Brackets ____ 11.139-11.140
SpeedBrace T-Brace ____ 11.141
Work Surface Brackets ____ 11.143
Countertop Support Brackets ____ 11.144
ADA Vanity Bracket ____ 11.145
Shelf Brackets ____ 11.146-11.147
KV Super Duty Bracket ____ 11.148
KV Folding Shelf Bracket ____ 11.149
Folding Table/Bench Brackets ____ 11.150-11.152

Dimensional data not binding. Dimensions in mm, inches are approximate. We reserve the right to alter specifications without notice.

Häfele Rafix System

→ Rafix 20 Cabinet Connectors

ixconnect

The Rafix 20 cabinet connector systems have zinc alloy tightening elements that are based on the centric sphere principle.

> Secure tightening, even after repeated slackening and re-tightening
> No offsetting against the side panels, because the bolts are centrally guided
> Tolerances are compensated for by long tightening distance
> Comfortable tightening with drive tool in 25° position
> All drilling operations take place on a flat surface

Rafix 20		> Zinc Alloy or Plastic connector housing > Without dowel > With tightening element that uses the centric sphere principal > Only one drill hole > With or without rim (Zinc Alloy is only available with rim)
		> Zinc Alloy or Plastic connector housing > With dowel that provides accurate positioning > With tightening element that uses the centric sphere principal > Better pull-out resistance values > Robust appearance
Rafix 20 Tab		> Plastic connector housing > Without dowel > Without tightening element > Design and drilling dimensions are identical to Rafix 20 without dowel > Tightening in slightly angled position > Installs and is removed by sliding on and lifting the connecting bolt > With rim

→ Installation

The Rafix 20 connector housings have two types of recess to accommodate a connecting bolt:

① Without ridge:

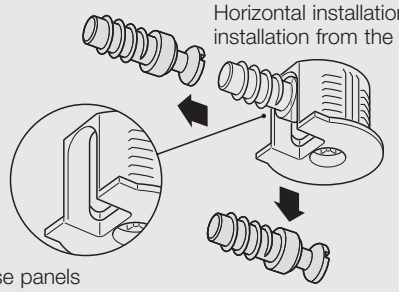

Horizontal installation/ installation from the front

The construction base panels can be inserted **from the front** and **from above**.

Vertical installation/ installation from above

② With ridge:

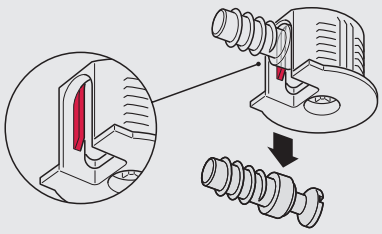

The construction base panels can only be inserted **from above** (vertical installation/ installation from above); The components are pre-fixed.

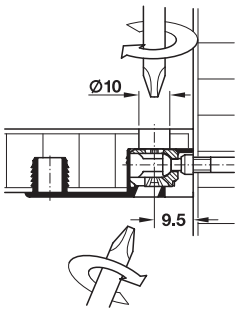

Access from above to the tightening element is possible due to the specially designed housing. Concealed installation of the connectors is possible and tightening via a Ø 10 mm through hole. The through hole is then concealed using a cover cap. Comfortable tightening of the connector from below with screwdriver in **25° position**.

Dimensional data not binding. Dimensions in mm, inches are approximate. We reserve the right to alter specifications without notice.

Häfele Rafix System

ixconnect

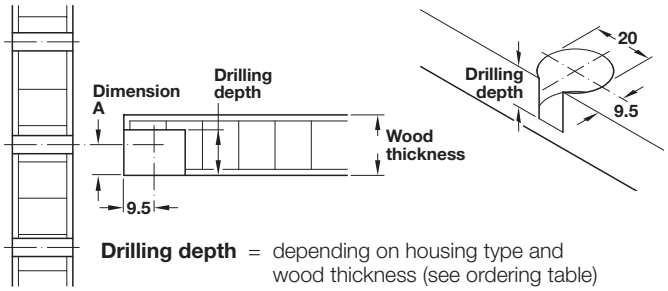

Drilling depth = depending on housing type and wood thickness (see ordering table)

Dimension A = 1/2 of the wood thickness (see ordering table)

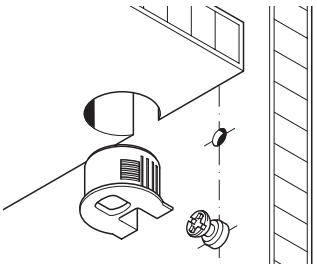

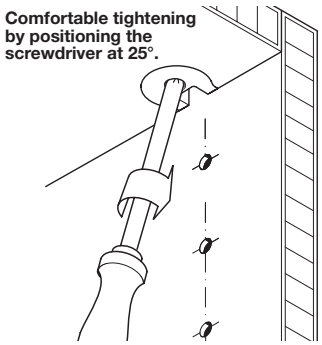

For wood thickness	Dim. A mounting center	Drilling depth
16	8.0	12.7+0.2 mm
19	9.5	14.2+0.2 mm

→ Rafix 20 Housing

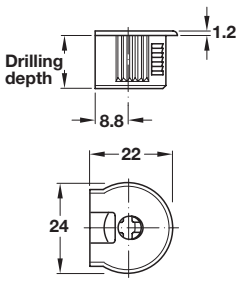

> With tightening element
> Drive: Pozi #2
> Material: Zinc Alloy

For wood thickness	Finish	Without ridge	With ridge
16	nickel-plated	263.11.703	263.15.703
19	nickel-plated	263.11.705	263.15.705
	bronzed	263.11.105	263.15.105

→ Rafix 20 Housing

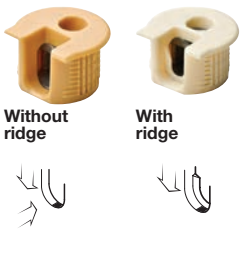

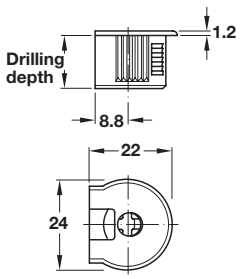

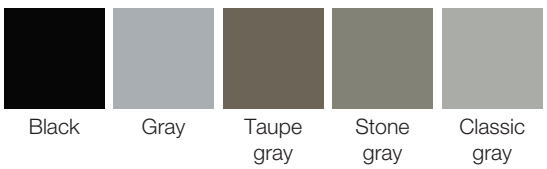

> With tightening element
> Drive: Pozi #2
> Material: Plastic; Tightening element: Zinc Alloy

For wood thickness	Color	Without ridge	With ridge
16	white	263.10.703	263.14.703
	beige	263.10.403	263.14.403
	brown	263.10.103	263.14.103
	black	263.10.303	263.14.303
19	white	263.10.705	263.14.705
	beige	263.10.405	263.14.405
	maple	263.10.165	263.14.106
	candlelight	263.10.125	263.14.605
	cognac	263.10.185	263.14.107
	brown	263.10.105	263.14.105
	black	263.10.305	263.14.305
	gray	263.10.205	263.14.205
	taupe gray	263.10.615	263.14.615
	stone gray	263.10.815	263.14.815
	classic gray	263.10.915	263.14.915

Dimensional data not binding. Dimensions in mm, inches are approximate. We reserve the right to alter specifications without notice.

Häfele Rafix System

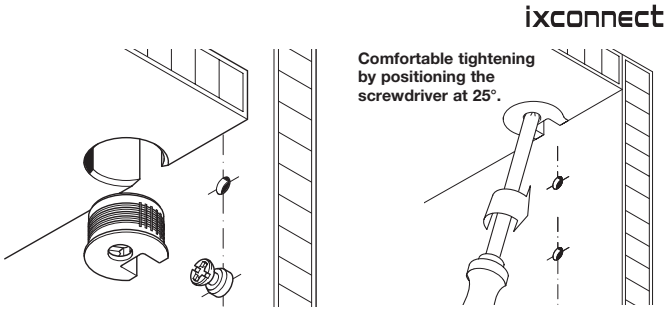

> No projecting parts due to the countersunk rim on the housing
> Housing is mounted flush to shelf
> Panels can be stacked without spacers

→ Rafix 20 Flush Fitting

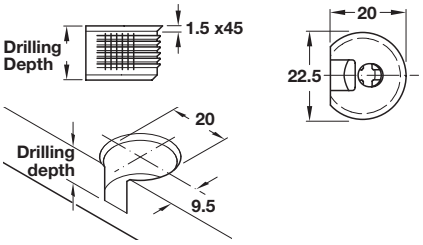

> With tightening element
> For wood thickness: 19 mm
> Mounting center: 9.5 mm
> Drilling depth: 14.2+0.2 mm
> Material: Plastic; Tightening element: Zinc Alloy

Color	With ridge	Without ridge
white	263.52.705	263.50.705
beige	-	263.50.405
brown	-	263.50.105
black	-	263.50.305
gray	263.52.205	-

→ Trim Cap

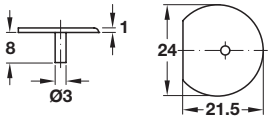

> For Rafix 20 flush fitting
> Material: Plastic

Color	Item No.
white	263.59.730
beige	263.59.430
brown	263.59.130

Dimensional data not binding. Dimensions in mm, inches are approximate. We reserve the right to alter specifications without notice.

Häfele Rafix System

> Easy to apply without caulking or extra glue
> Can be cut to fit
> Same texture, color and appearance of industry standard sheet goods
> Does not depend on screw for proper installation
> Provides durable, attractive coverage

→ Capfix Self-Adhesive Rafix

> Thickness: 0.90 mm
> Peel - 28.3 N/2.5 cm
> Ultimate Peels - 36.2 N/2.5 cm
> Hold: 13.8 KPQ
> Temperature resistance: 40–121° C
> Application temperature: 12.5° C
> Release liner: 98 GSM
> Material: Polyvinyl

Finish	Item No.
manitoba maple	045.43.101
maple	045.43.140
cognac	045.43.141
black	045.43.300
almond	045.43.400
fog gray	045.43.500
folkstone gray	045.43.501
bourbon cherry	045.43.603
bourbon red	045.43.630
white	045.43.700
antique white	045.43.701
presidential walnut	045.43.711
candlelight	045.43.820

Note
Shown in table order

→ Custom Color Punch Kit Replacement Die

> Rafix 1
> Material: Steel

	Item No.
	001.32.780

Dimensional data not binding. Dimensions in mm, inches are approximate. We reserve the right to alter specifications without notice.

Häfele Rafix System

ixconnect

→ Rafix 20 TAB Housing

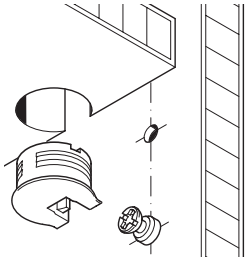

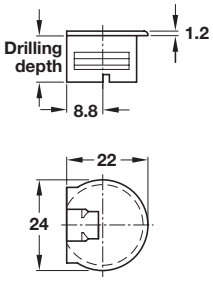

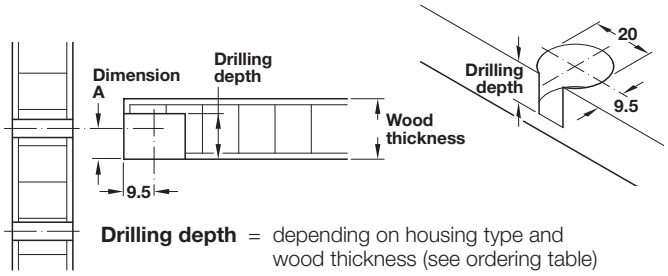

Drilling depth = depending on housing type and wood thickness (see ordering table)

Dimension A = 1/2 of the wood thickness (see ordering table)

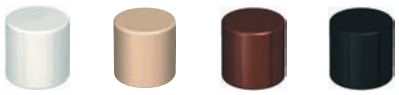

White Beige Brown Black

- > Rafix 20 TAB is a continuation of the Rafix design line for shelf connections
- > The housing is pressed into the shelf and pushed onto connecting bolt
- > A cost effective method for creating a positive engagement shelf support
- > Uses standard Rafix machining while allowing for a tool-free connection
- > Without tightening element
- > Material: Plastic

Color	For 19 mm	For 16 mm
white	263.09.732	263.09.731
beige	263.09.432	-
brown	263.09.132	-
black	263.09.332	263.09.339

For wood thickness	Dim. A mounting center	Drilling depth
16	8.0	12.7+0.2 mm
19	9.5	14.2+0.2 mm

Dimensional data not binding. Dimensions in mm, inches are approximate. We reserve the right to alter specifications without notice.

Häfele Rafix System

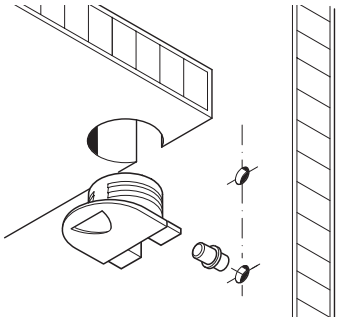

ixconnect

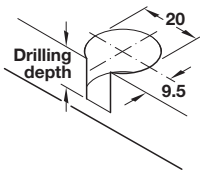

> Rafix TAB with sliding cover cap is a continuation of the Rafix design line for supporting shelves
> Pre-installation of shelves prior to shipping is possible, saving installation time
> Standard Rafix and shelf support drilling patterns minimizes part confusion in manufacturing
> Shifting items on the shelves will not cause the shelf to move or fall off pins
> Can be used as an angle shelf pivot

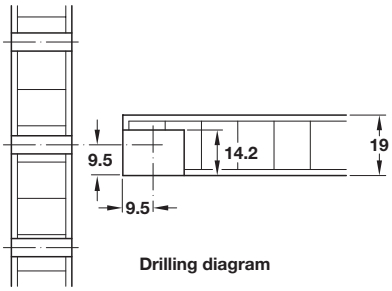

Drilling diagram

→ Rafix 20 TAB Housing with Sliding Cover Cap

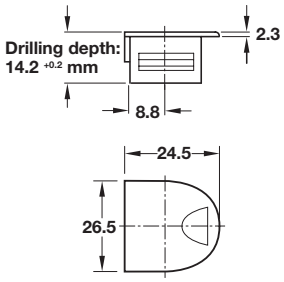

> Material: Plastic

Housing/Cover cap	Item No.
gray/white	263.09.795

→ Shelf Support

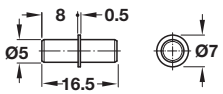

> Ø: 5 mm
> Material: Steel

Finish	Item No.
zinc-plated	282.43.905

→ Shelf Support

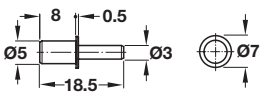

> Ø: 3 mm
> Material: Steel

Finish	Item No.
nickel-plated	282.43.727

Dimensional data not binding. Dimensions in mm, inches are approximate. We reserve the right to alter specifications without notice.

Häfele Rafix System

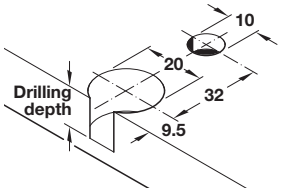

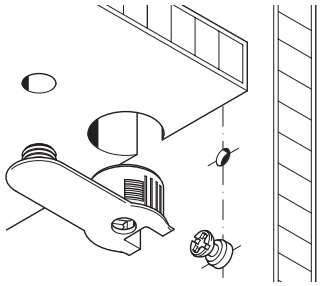

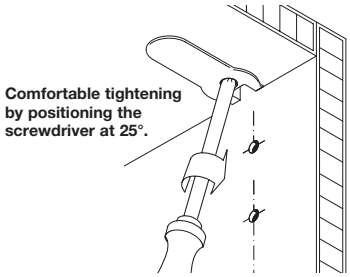

ixconnect

Provides added structure, strength and easy alignment.

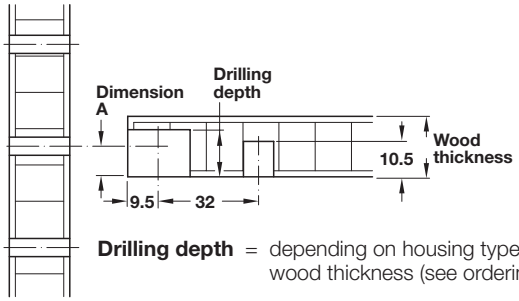

Drilling depth = depending on housing type and wood thickness (see ordering table)

Dimension A = 1/2 of the wood thickness (see ordering table)

For wood thickness	Dim. A mounting center	Drilling depth
16	8.0	12.7+0.2 mm
19	9.5	14.2+0.2 mm

→ Rafix SE 32 Dowel Stud

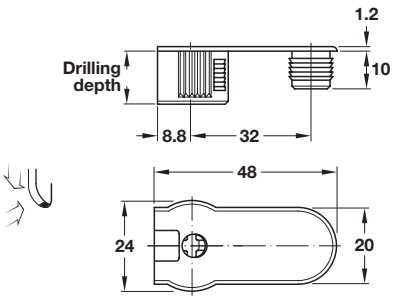

> With tightening element
> Without ridge
> For wood thickness: 19 mm
> Drive: Pozi #2
> Material: Zinc Alloy

Finish	Item No.
nickel-plated	263.13.705

Supplied With
500 pcs.

→ Rafix SE 32 Dowel Stud

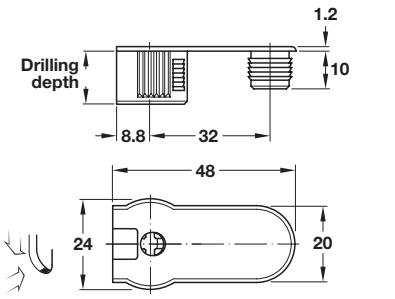

> With tightening element
> Without ridge
> Drive: Pozi #2
> Material: Plastic; Tightening element: Zinc Alloy

For wood thickness	Color	Item No.
16	white	263.12.703
19	white	263.12.705
	beige	263.12.405
	brown	263.12.105
	black	263.12.305
	gray	263.12.505

Dimensional data not binding. Dimensions in mm, inches are approximate. We reserve the right to alter specifications without notice.

Häfele Rafix System

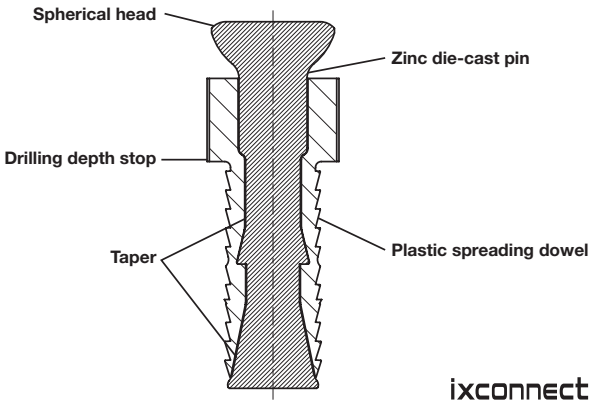

The Rafix spreading bolt is simply inserted by hand into a 5 mm hole in a side panel to produce an immediate and firm locking connection when tightened.

The bolt consists of a double-tapered metal pin with the typical Rafix spherical head. This is embedded into a plastic spreading dowel. The top of the dowel is fitted with a knurled depth stop which makes manual insertion simple. The panel components are drawn together with a firm locking connection as the stop ensures a uniform tensioned length of 9 mm. When the bolt is tightened with a Rafix cam, the double taper spreads the dowel, expanding it in the hole. The greater the effect of the tightening forces, the more durable the connection. To remove the spreading bolt, simply tap the metal pin back into the dowel and remove the bolt by hand.

> Depth stop ensures consistent bolt position
> Panel surfaces will not be damaged upon bolt removal
> Quick and easy assembly
> Tool-less insertion and removal
> Must use Rafix housing with ridge

→ Spreading Bolt, Ø5 mm hole

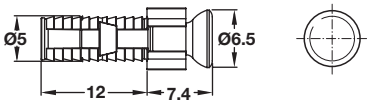

> With harpoon thread, two-part
> Drilling depth: 12.5+1.0 mm
> Material: Bolt: Zinc die-cast; Spreading Dowel: Plastic

Color	Item No.
black	263.20.313

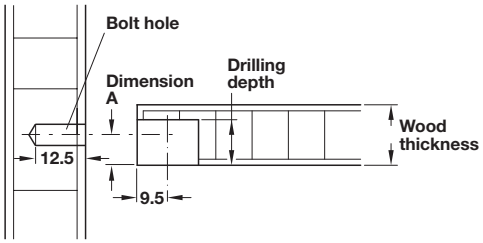

Bolt hole = Ø5 mm

Drilling depth = depending on cam type and wood thickness

Distance A = 1/2 wood thickness

Dimensional data not binding. Dimensions in mm, inches are approximate. We reserve the right to alter specifications without notice.

Häfele Rafix System

ixconnect

Connecting bolts with:

= cross-slot
- tightening with cross-slot screwdriver size 2 only

= combination slot
- tightening with cross-slot screwdriver size 2 or flat-blade screwdriver

→ Connecting Bolt

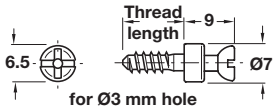

> Material: Steel; Finish: zinc-plated

Thread length	Item No.
9	263.20.818
11	263.20.810

→ Spreading Dowel

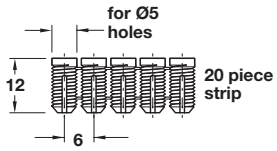

> Material: Nylon

Color	Item No.
natural	042.98.051

→ Spreading Dowel

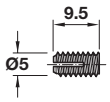

> Without collar in Ø5 mm holes
> Material: Nylon

Color	Item No.
natural	042.98.033

→ Connecting Bolt

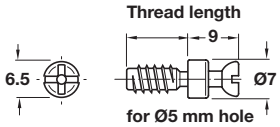

> Material: Steel

Thread length	Bright	Zinc-plated
8	-	263.20.838
11	263.20.141	263.20.847
15	263.20.150	263.20.856

→ Connecting Bolt

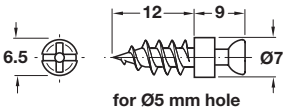

> Material: Steel; Finish: zinc-plated

Drive type	Item No.
#2 Phillips	263.20.985
Pozi	263.20.981

→ Connecting Bolt

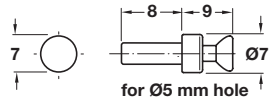

> Material: Steel

Finish	Item No.
zinc-plated	263.20.971

Dimensional data not binding. Dimensions in mm, inches are approximate. We reserve the right to alter specifications without notice.

Häfele Rafix System

ixconnect

→ Connecting Bolt

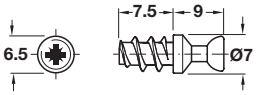

> Material: Zinc Alloy, galvanized

Drive type	Item No.
PZ2 cross slot	263.20.131

→ Connecting Bolt

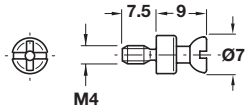

> With M4 thread
> Drive: Cross-slot Pozi #2 or flat blade
> Material: Steel

Finish	Item No.
zinc-plated	263.21.817

→ Spreading Dowel

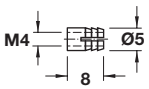

> With M4 internal thread; For drilled hole Ø5 mm
> Length: 8 mm
> Material: Brass

	Item No.
	051.45.004

→ Glue-in Sockets

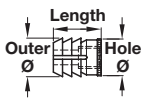

> Glue grooves; Internal thread M4
> Material: Nylon; Color: natural

Length	Item No.
8	039.33.140
10	039.33.042

→ Sleeve

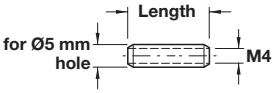

> With M4 internal thread
> Smooth sleeve suitable for double-sided assemblies
> Material: Steel

	Length		
Finish	15 mm	18 mm	22 mm
unfinished	267.00.011	267.00.012	267.00.013
zinc-plated	267.00.911	267.00.912	267.00.913

→ End Screw

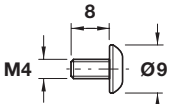

> With M4 internal thread
> Can be used as end bolt
> Material: Steel

	Item No.
	020.92.711

Supplied With 2000 pcs.

Dimensional data not binding. Dimensions in mm, inches are approximate. We reserve the right to alter specifications without notice.

Häfele Rafix System

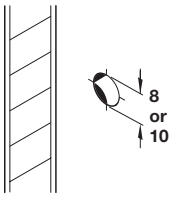

ixconnect

> Tightening with #2 Pozi drive or flat-blade screwdriver

→ Connecting Bolt

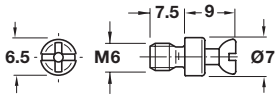

> With M6 thread
> Screws into dowels or sleeves for single-sided assemblies
> Dowels or sleeves can be selected for Ø8 or Ø10 mm holes
> Material: Steel, galvanized

	Item No.
	263.21.826

The connecting bolt above can be used with the following dowels:

→ Spreading Dowel

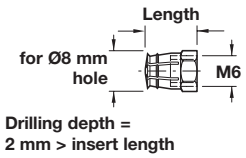

> With M6 internal thread
> Material: Brass, bright

Length	Item No.
9	039.00.267
12 w/nylon ball	039.00.061

→ Glue-in Dowel

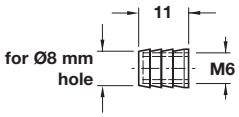

> With M6 internal thread
> Material: Nylon

Color	Item No.
natural	039.33.462

→ Glue-in Dowel

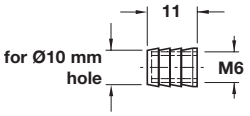

> With M6 internal thread
> Material: Nylon

Color	Item No.
natural	039.33.266

→ Spreading Dowel Strip

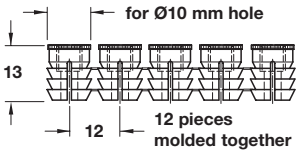

> With M6 internal thread
> Material: Nylon

Color	Item No.
natural	039.35.064

Dimensional data not binding. Dimensions in mm, inches are approximate. We reserve the right to alter specifications without notice.

Häfele Rafix System

ixconnect

→ Push thru Bolt

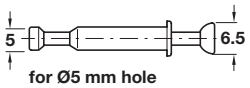

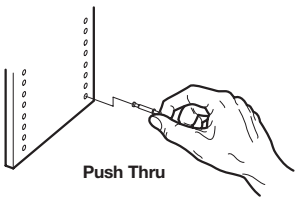

> For center panels
> Material: Steel; Finish: zinc-plated

For panel thickness	Item No.
16	263.24.971
19	263.24.972

Note
This double bolt functions only in combination with cams without ridge, shown on pages **11.5–11.6, 11.10**.

→ Double-ended Bolt

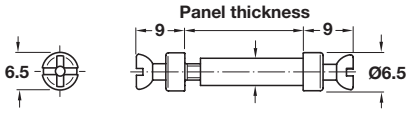

> For double-sided assemblies
> For side panel thickness: 16–22 mm
> Material: Steel

	Bright	Zinc-plated
	263.24.041	263.24.943

Note
Individual replacement components are available.
Bolt (male): 263.24.845, zinc-plated
Sleeve (female): 263.24.836, zinc-plated

Dimensional data not binding. Dimensions in mm, inches are approximate. We reserve the right to alter specifications without notice.

Häfele Rafix Installer Kit

ixconnect

> For quick, accurate drilling of Rafix 20 and Rafix 20 Flush systems
> Can also be used to drill 5 mm system holes in side panels

→ Kit with System Holes

	Item No.
	001.25.638

Supplied With	Item No.
Rafix drill guide with system holes	001.25.631
Rafix depth gauge	001.28.750
Drillbit Ø20 x 139 RH	001.24.425
Stop ring Ø10 shank	001.42.693

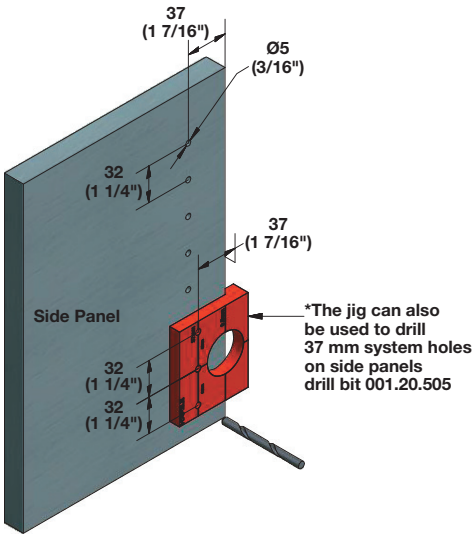

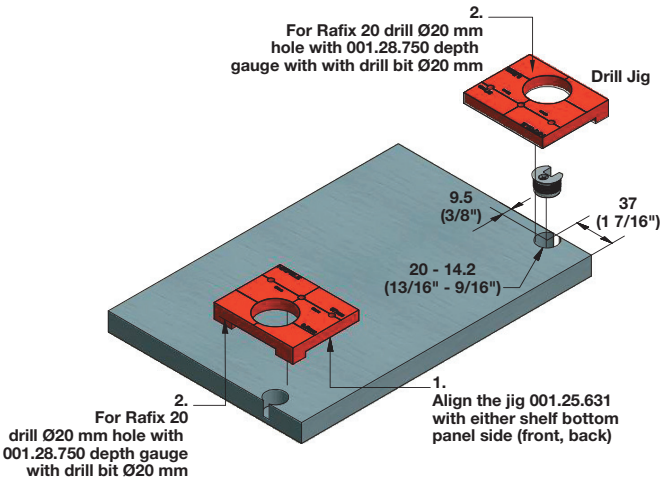

→ Drillbit Ø5 mm Hex, optional

	Item No.
	001.20.505

→ Drillbit Ø20 mm Countersunk, optional

> For Rafix 20 Flush
> 20 mm x 139 mm, RH
> Material: Carbide

	Item No.
	001.24.426

Dimensional data not binding. Dimensions in mm, inches are approximate. We reserve the right to alter specifications without notice.

Häfele Rafix Installer Kit

ixconnect

> For quick, accurate drilling of Rafix 20, Rafix-SE 32 and Rafix 20 Flush systems
> Can also be used to drill 5 mm system holes in side panels

→ Kit

	Item No.
	001.25.639

Supplied with	Item No.
Rafix drill guide	001.25.630
Rafix depth gauge	001.28.750
Drillbit Ø20 x 139 RH	001.24.425
Stop ring Ø10 shank	001.42.693

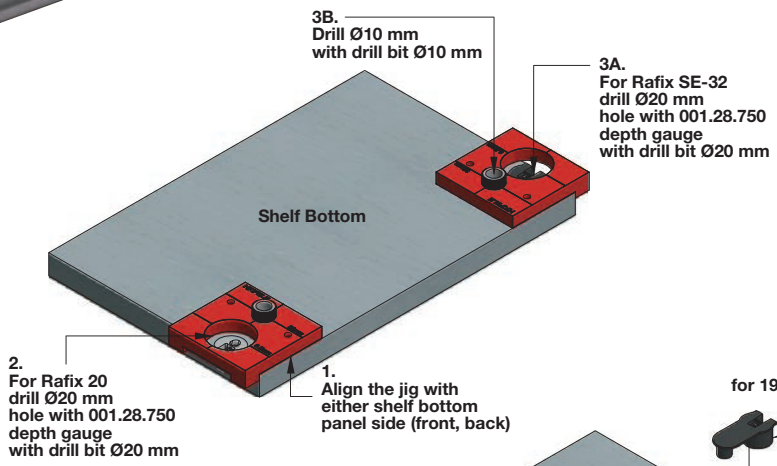

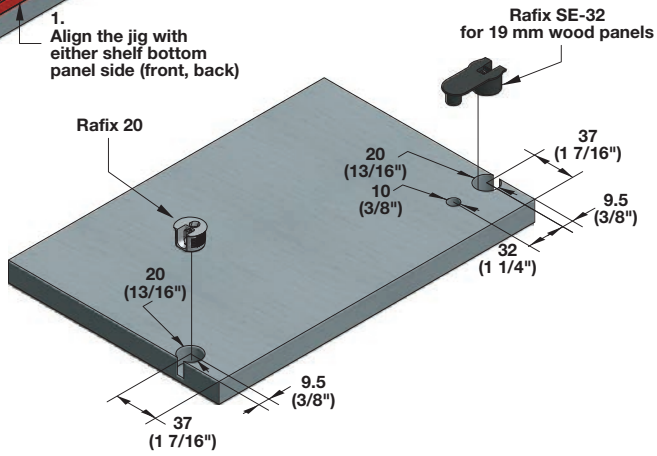

→ Drillbit Ø10 mm, optional

> For Rafix SE-32
> 10 mm x 139 mm, RH
> Material: Carbide

	Item No.
	001.24.319

→ Drillbit Ø5 mm Hex, optional

	Item No.
	001.20.505

→ Drillbit Ø20 mm Countersunk, optional

> For Rafix 20 Flush
> 20 mm x 139 mm, RH
> Material: Carbide

	Item No.
	001.24.426

Dimensional data not binding. Dimensions in mm, inches are approximate. We reserve the right to alter specifications without notice.

Häfele Rafix

→ Futura 250 Rafix Machine

> Vertical drilling and insertion of hinges and connectors, vertical line boring
> Power rating: 1.5 horsepower
> Required air pressure: 90 psi

Motor	Amps	Item No.
110V/60Hz	20	001.89.505
Single phase 220V/60Hz	10	001.89.506
3 phase 220V/60Hz	10	001.89.508

Supplied With
Pneumatic drilling unit with push button control
Ruler 600 mm (23 5/8")
2 Tilt stops with clamp lever
Worktop 600 x 400 mm (23 5/8" x 15 3/4")
2 Pneumatic hold-down clamps
Locking pin for fence depth adjustment with positive stops
Rafix - 9.5 mm
Line boring - 37 mm
1 - 20 mm LH & 1 - 10 mm RH bit

Note
Order accessories separately, below.

→ Accessories – Order separately

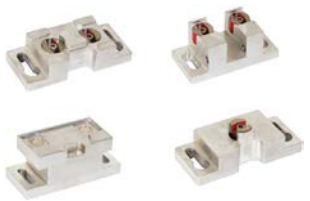

Description	Item No.
7 spindle line boring head	001.89.520
Rafix gear box - replacement	001.89.515
Additional tilt stop	001.89.550
Extension ruler 1219 (48") - 2 pc. set	001.89.560

→ Replacement Bits

> Material: Carbide

Size / Handing	Item No.
20 x 57 RH	001.08.003
10 x 57 LH	001.85.408

Dimensional data not binding. Dimensions in mm, inches are approximate. We reserve the right to alter specifications without notice.

Häfele Minifix® System

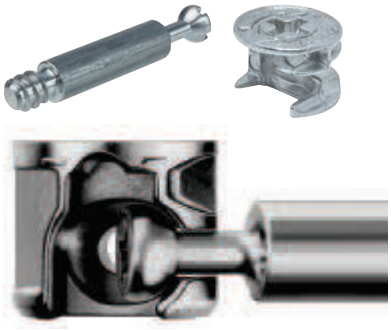

This connector provides firm, positive-fitting connections despite its small design and even after repeated slackening and re-tightening.

The Minifix® cabinet connector system is based on the centric principle. This made it possible to develop a connector with a small connector housing with an integrated large tightening and supporting surface. The hemispherical head of the bolt fits exactly in the center of the cup-shaped recess in the Minifix® housing, and is tightened to achieve a positive-fit.

→ Advantages of Minifix®

> The half round connecting bolt head locates centrally in the cup-shaped cam recess from any angle and is then positively secured
> Automatic centering of the bolt means that panels are no longer subject to lateral displacement relative to the side panel
> Long tightening distance of nearly 5 mm by only half a turn of cam
> Long tightening distance for increased tolerances compensation
> Secure tightening is guaranteed even in case of repeated dis-assembly and re-assembly
> Tight joint secures against loosening
> Delicate and elegant shape

→ The Minifix® "clockface"

The Minifix® clockface demonstrates correct tightening:
- The long tightening distance A of approximately 5 mm produced by only one half turn of the cam offers the following benefits:
- Variations in hole size of +1 mm to approximately -0.5 mm are compensated for without loss of efficiency
- Tension is rapidly achieved as the cam is tightened, before the arrow reaches the 195° stop (12:30)

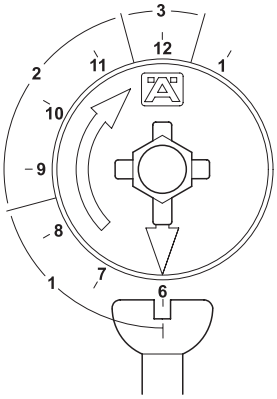

The tightening distance A can be separated into 3 travel segments with different functions:

1. Closing distance:
0°–75° (6–8:30) = 3 mm pull.
This turn is necessary to draw the bolt head into the center of the cam (no tightening occurs within this segment).

2. Tightening distance:
75°–165° (8:30–11:30) = 2 mm pull.
This segment is sufficient to ensure rigid tensioning. Provided the specified drill-hole size has been met, tightening will be initiated as early as 120° (10:00). Optimum security will be reached at 165° (11:30).

3. Re-tightening distance:
165°–195° (11:30–12:30) = 0.5 mm pull is required:
Accommodates variations in drill hole size or if the furniture is assembled and disassembled repeatedly or requires retightening due to severe loading conditions.

→ Installation Reference

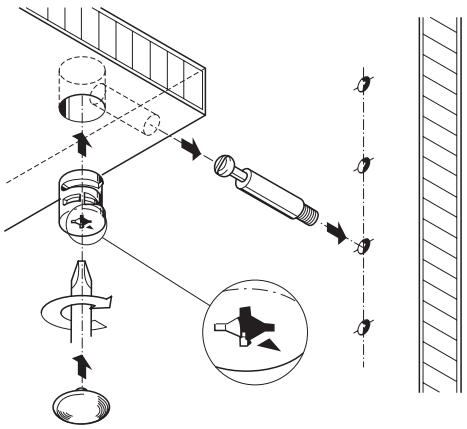

The Minifix® system is suitable for wood thickness from 12 mm and above.
> The drill hole diameter for the housing is 12 mm for Minifix® 12 and 15 mm for Minifix® 15
> For correct installation and tightening, the housing must be installed with the arrow pointing directly towards the bolt
> A positive-fit connection is reached with PZ2 cross slot, SW4 hexagon socket or flat blade, depending on the connector housing

Important:

Drill hole = Varies according to cam type (Ø15 and 12 mm), see the following Minifix® cam pages.

Drilling depth = Varies according to cam type and wood thickness 12, 13, 16, 19, 23 and 29 mm. (see details in ordering tables of the Minifix® cam pages)

Drilling distance B = choice between B 24 (24 mm), B 34 (34 mm) distance between drill hole center to panel edge.

Bolt drill hole = drill hole in panel edge for the connecting bolt Ø5 mm, 7 mm or 8 mm.

Dimensional data not binding. Dimensions in mm, inches are approximate. We reserve the right to alter specifications without notice.

Häfele Minifix® System

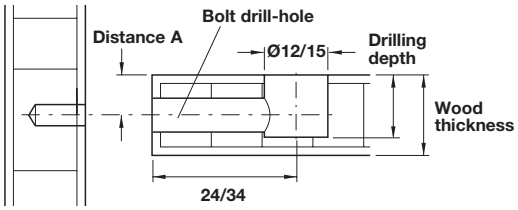

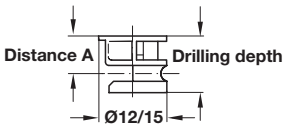

ixconnect

→ Minifix® 12 Cam

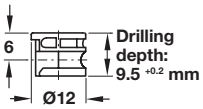

> Can be locked only with a cross-slot screwdriver size 2
> Without flanged rim
> Wood thickness: from 12 mm
> Material: Zinc, die-cast

Wood thickness	Distance A Center locking position	Drive	Drilling depth	unfinished	nickel-plated
From 12	6.0	PZ2 cross slot, flat blade	9.5+0.2	262.17.020	262.17.620

→ Minifix® 15 Cam

> Without flanged rim
> Material: Zinc die-cast

Wood thickness	Distance A Center locking position	Drive	Drilling depth	unfinished	nickel-plated	black
12	6.0	PZ2 cross slot, flat blade or SW4 hexagon socket	9.5+0.2	262.26.070	262.26.570	-
13	6.5		11.0+0.2	262.26.031	262.26.531	262.26.351
16	8.0		12.5+0.5	262.26.033	262.26.533	262.26.353
19	9.5		14.0+0.5	262.26.035	262.26.535	262.26.355
23	11.5		16.5+0.5	262.26.036	-	262.26.356
29	14.5		19.5+0.5	262.26.038	-	262.26.358

→ Minifix® 15 Cam

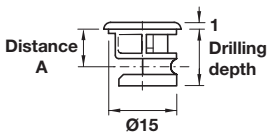

> With flanged rim
> Material: Zinc die-cast

Wood thickness	Distance A Center locking position	Drive	Drilling depth	unfinished	nickel-plated	black
16	8.0	PZ2 cross slot, flat blade or SW4 hexagon socket	12.5+0.5	-	262.25.533	-
19	9.5		14.5+0.5	262.25.035	262.25.535	262.25.355

Note All the connecting bolts shown on pages **11.21-11.22** can be used with these zinc die-cast cams.

Dimensional data not binding. Dimensions in mm, inches are approximate. We reserve the right to alter specifications without notice.

Minifix® System

ixconnect

> Connecting bolts with M6 thread for screw-attachment into dowels for single-sided installations
> Dowels can be selected for 8 or 10 mm diameter holes

→ M200 Connecting Bolt/cold-formed

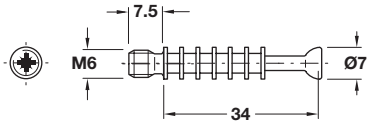

> Drive: Pozi 2 or Phillips 2
> Material: Steel, galvanized

	Item No.
	262.28.642

→ S100 Connecting Bolt/turned

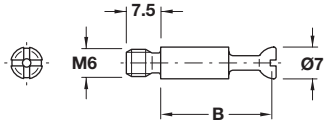

> Material: Steel, galvanized

B	Item No.
24	262.27.949
34	262.28.946

The connecting bolts above can be used with the following parts:

→ Spreading Dowel

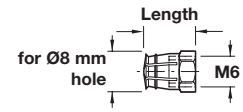

> With M6 internal thread
> Material: Brass, bright

Length	Item No.
9	039.00.267
12 w/nylon ball	039.00.061

→ Glue-in Dowel

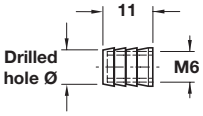

> With M6 internal thread
> Length: 11 mm
> Material: Nylon; Color: natural

Drilled hole Ø	Item No.
8	039.33.462
10	039.33.266

→ S100 Connecting Bolt/turned

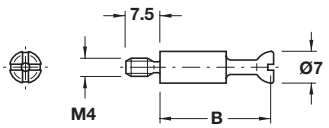

> Connecting bolt, with M4 thread for screw attachment into dowels or sleeves for single or double-sided installations
> Sleeves or dowels can be selected for holes between Ø5, 8, or 10 mm
> Drive: Cross-slot 2 or flat blade
> Material: Steel, galvanized

B	Item No.
24	262.27.930
34	262.28.937

The connecting bolt on left can be used with the following parts:

→ Glued Dowel

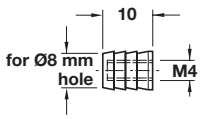

> With M4 internal thread
> Material: Nylon

Color	Item No.
natural	039.33.042

→ Spreading Dowel

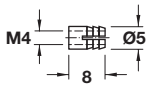

> With M4 internal thread
> Material: Brass, bright

	Item No.
	051.45.004

→ Trim Cap

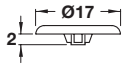

Wood thickness:
12–13 mm

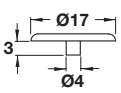

Wood thickness:
16, 19, 23, & 29 mm

> For Minifix® cams without flanged rims.
> Material: Plastic

Wood thickness	white	pine	brown	gray	black
12–13	-	-	262.24.162	-	-
16, 19, 23, & 29	262.24.751	262.24.055	262.24.153	262.24.525	262.24.359

Dimensional data not binding. Dimensions in mm, inches are approximate. We reserve the right to alter specifications without notice.

Minifix® System

ixconnect

→ S100 Connecting Bolt

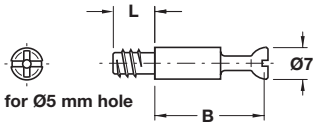

> Material: Steel

Thread length L	Drilling distance B	unfinished	galvanized
8	24	-	262.27.920
8	34	-	262.28.920
15	24	-	262.27.832
15	34	-	262.28.839
11	24	262.27.029	-
11	34	262.28.026	-
11	24	-	262.27.921
11	34	-	262.28.928

→ S100 Connecting Bolt/turned

> Drilling distance: 34 mm
> Material: Steel, unfinished

Item No.
262.28.188

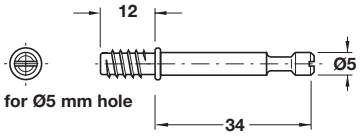

→ End Screw

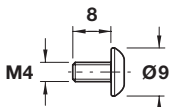

> With M4 thread
> Can be used as end bolt
> Material: Steel

Finish	Item No.
nickel-plated	020.92.711

Supplied With
2000 pcs.

→ S200 Econo S Bolt/cold-formed

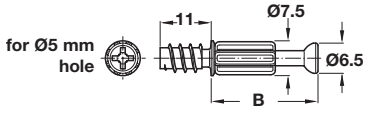

> Drive: Pozi 2 or Phillips 2
> Polystyrene sleeve prevents sagging and allows bolt to revolve freely during installation
> Material: Steel, galvanized

Drilling distance B	unfinished	zinc-plated
24	262.27.670	262.27.679
34	262.28.670	262.28.679

→ M200 Connecting Bolt/cold-formed

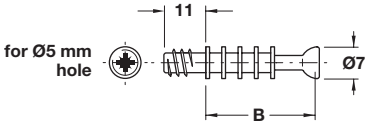

> Thread length 11 mm standard
> Drive: Pozi 2 or Phillips 2
> Material: Steel, galvanized

B	Item No.
24	262.27.627
34	262.28.624

→ Sleeve, smooth

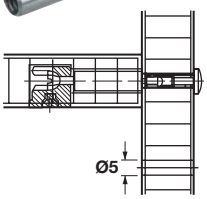

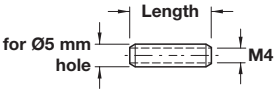

> With M4 internal thread
> Suitable for double-sided installations
> Material: Steel, galvanized

Length	Item No.
15	267.00.911
18	267.00.912
22	267.00.913

Dimensional data not binding. Dimensions in mm, inches are approximate. We reserve the right to alter specifications without notice.

Häfele Minifix® System

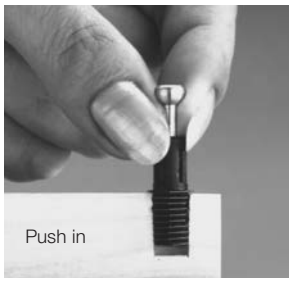

ixconnect

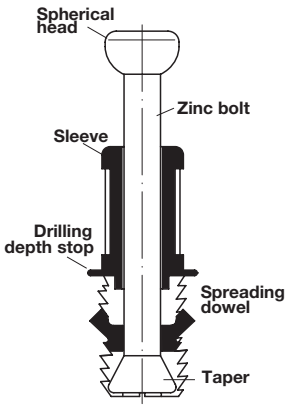

The ingenious Minifix® spreading bolt is simply pushed by hand into the 5, 8 or 10 mm holes in the side panel and produces an immediate and firm locking connection when tightened.

The bolt consists of a tapered metal pin with the typical Minifix® spherical head. This is embedded into a plastic spreading dowel. The top of the dowel is fitted with a stop and an easy-grip sheathing which makes manual insertion simple. The furniture components are drawn together ideally with a firm locking connection, as the stop ensures a uniform tensioned length of 34 mm. When the bolt is tightened with a Minifix® cam, the taper spreads the dowel, expanding the plastic spreading dowel in the hole. The greater the effect of the tightening forces, the more durable the connection. When dismantling the furniture, the bolt can be unscrewed again by hand.

> Depth stop ensures ideal bolt position
> No damage to surface due to insertion and unscrewing of spreading bolt
> Easy-to-assemble
> No tools required for insertion or disassembly

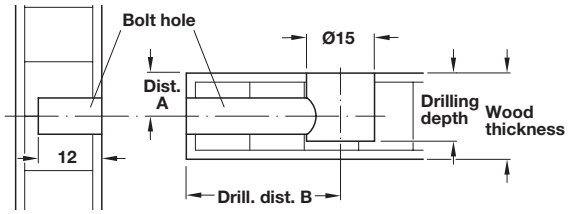

Bolt hole = Ø5 mm, 8 mm and 10 mm

Drilling depth = depending on cam type and wood thickness (see diagram)

Distance A = 1/2 wood thickness (see diagram)

Drilling dist. B = optional between **B 24** (24 mm) or **B 34** (34 mm), drilling distance from cam center to front edge

→ C100 Spreading Bolt, Ø5 mm hole

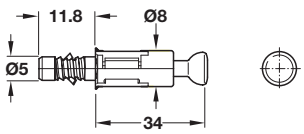

> With harpoon thread, two-part
> Material: Bolt: Zinc die-cast
Spreading dowel: Plastic; Color: black

	Item No.
	262.09.320

→ C100 Spreading Bolt, Ø8 mm hole

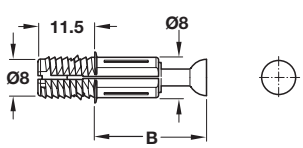

> With harpoon thread, two-part
> Material: Bolt: Zinc die-cast
Spreading dowel: Plastic; Color: black

Drilling distance B	Item No.
24	262.09.202
34	262.09.302

→ C100 Spreading Bolt, Ø10 mm hole

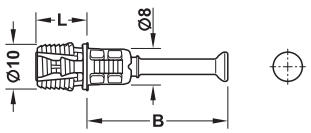

> With harpoon thread, two-part
> Material: Bolt: Zinc die-cast
Spreading dowel: Plastic; Color: black

Drilling distance B	Item No.
24	262.09.213
34	262.09.313

Dimensional data not binding. Dimensions in mm, inches are approximate. We reserve the right to alter specifications without notice.

Minifix® System

ixconnect

→ Capped Bolt/cold-formed

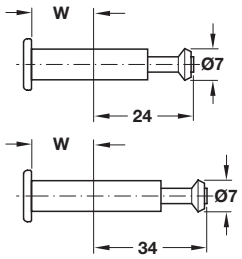

> For Ø8 mm holes
> Material: Steel

Panel thickness W	Drilling distance	nickel-plated	bronzed
16	24	-	262.27.154
	34	262.28.755	-
19	24	262.27.765	262.27.163
	34	262.28.765	262.28.160

→ Double-Ended Bolt/turned

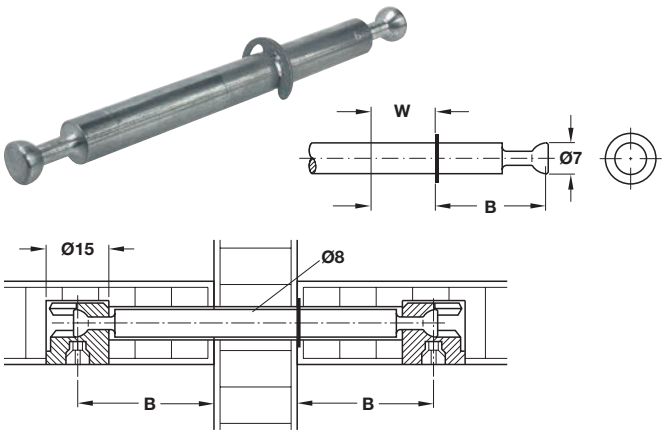

> With snap ring
> For Ø8 mm holes
> Material: Steel; Finish: zinc-plated

Panel thickness W	Drilling distance B	Item No.
16	34	262.28.802
19	24	262.27.814
	34	262.28.811

→ Double-Ended Bolt/turned

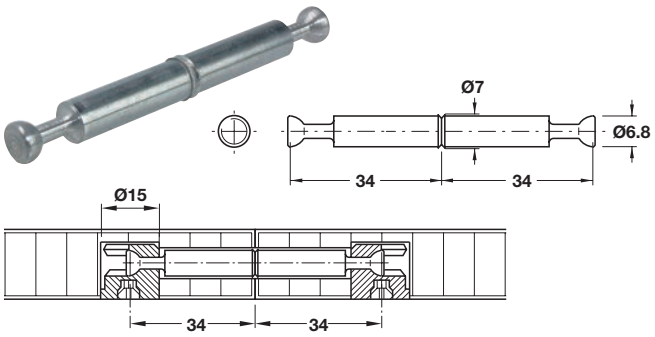

> With center ring
> For butt joints using Ø7 mm holes
> To eliminate up and down movements, 7 mm pilot holes are recommended
> Drilling distance: 34 mm
> Material: Steel

Finish	Item No.
zinc-plated	262.28.786

Dimensional data not binding. Dimensions in mm, inches are approximate. We reserve the right to alter specifications without notice.

Minifix® Miter Joint Connectors

ixconnect

> A practical method of joining miter-jointed cabinets and profiles without costly gluing, and making large panels of furniture with miter joints
> Minifix® GV miter joint connectors are hinged connecting bolts, capable of securing miter joints at any angle from 90° to 180°
> These connectors should preferably be used only with Ø15 mm zinc die-cast Minifix® cams

→ Minifix® GV/turned

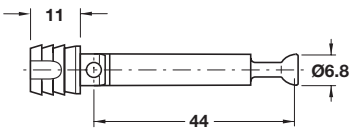

> With nylon sleeve
> For miter angles 90° to 180°
> Bolt hole: 7 mm
> Drilling distance: 44 mm
> For drilled hole: 8 mm
> Material: Steel, galvanized

	Item No.
	262.12.804

→ Minifix® GV/turned

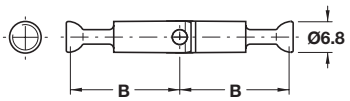

> Hinged miter joint connector for double-sided installation in 7 mm diameter holes
> Material: Steel, galvanized

B	Item No.
24	262.12.859
44	262.12.939

Dimensional data not binding. Dimensions in mm, inches are approximate. We reserve the right to alter specifications without notice.

Häfele Minifix®

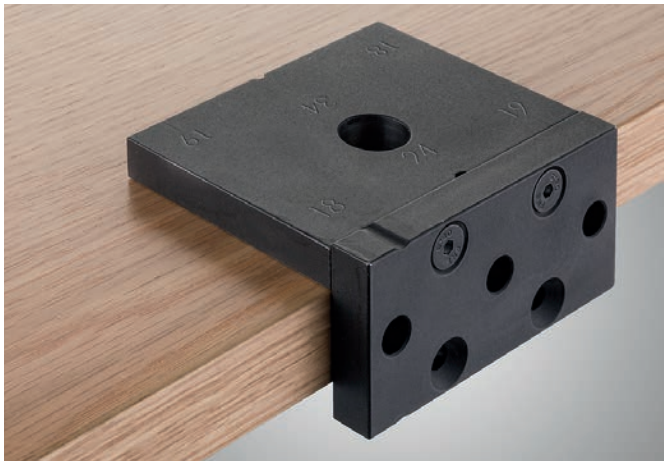

> For precise and rapid drilling for Minifix® 15 with tightening distance 24 and 34 mm
> Suitable for commercial drill bits
> For panel thickness: 15/16/18/19 mm
> With inserts for 5 mm drill hole on cabinet side panel
> Material: Steel, burnished

ixconnect

→ Drilling Jig 24/34

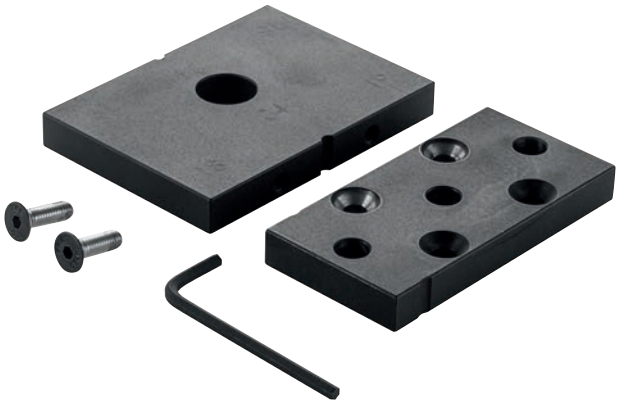

Finish	Item No.
black	001.25.010

Supplied With
Insert for drill holes on cabinet side panel

Dimensional data not binding. Dimensions in mm, inches are approximate. We reserve the right to alter specifications without notice.

Capfix Self-Adhesive Minifix®

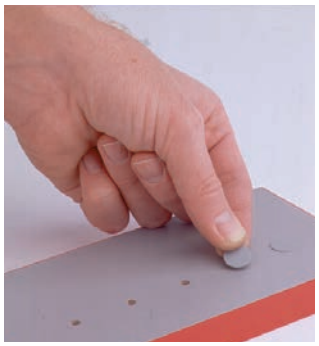

> Easy to apply without caulking or extra glue
> Can be cut to fit
> Same texture, color and appearance of industry standard sheet goods
> Does not depend on screw for proper installation
> Provides durable, attractive coverage
> Thickness: 0.90 mm
> Peel-28.3 N/2.5 cm
> Ultimate Peels-36.2 N/2.5 cm
> Hold: 13.8 KPQ
> Temperature resistance: 40-121° C
> Application temperature: 12.5° C
> Release liner: 98 GSM

→ 18 mm Cover Caps

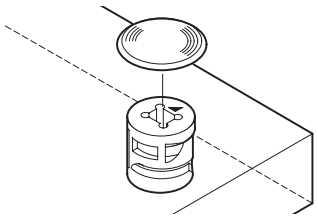

> Material: Polyvinyl

Finish	Item No.
white	045.25.700
antique white	045.25.710
almond	045.25.400
black	045.25.300
folkstone gray	045.25.500
fog gray	045.25.510
hard rock maple	045.26.110
light maple	045.25.112
natural cherry	045.25.610
presidential walnut	045.25.213

Unfinished **Finished**

> Material: Wood Veneer

Finish	Item No.
Unfinished	
maple	045.26.100
walnut	045.26.700
cherry	045.26.600
Finished	
maple	045.26.101

Dimensional data not binding. Dimensions in mm, inches are approximate. We reserve the right to alter specifications without notice.

Häfele Maxifix® System

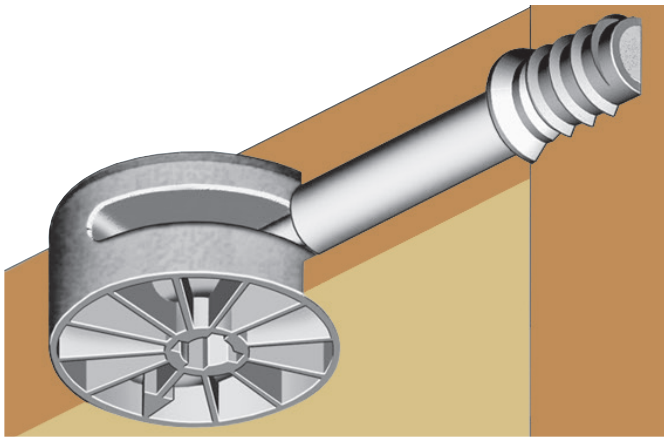

- > Cam and bolt connector for extremely strong connections of wood compounds
- > Minimum material thickness is 19 mm (3/4")
- > Long travel distance (= a lot of pull)
- > Quick tightening action, only 3/4 turn needed
- > Can be used with either Phillips #3 or 6 mm hex key
- > Power tools can be used for fast tightening
- > Locking device on the outside of the cam is an additional feature that prevents loosening

ixconnect

→ Connector Housing

Phillips #3

Hex 6 mm

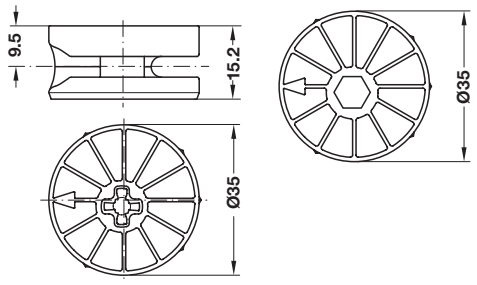

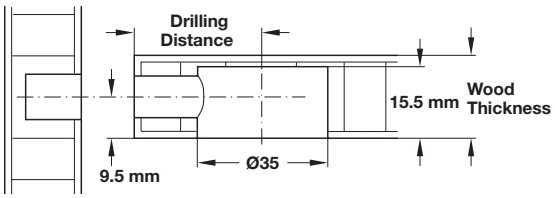

- > Material: Zinc

Version	Finish	Item No.
Phillips #3	unfinished	262.87.013
	nickel-plated	262.87.713
Hex 6 mm	unfinished	262.87.003
	nickel-plated	262.87.703

Note
Drilling distance depends on bolt used.

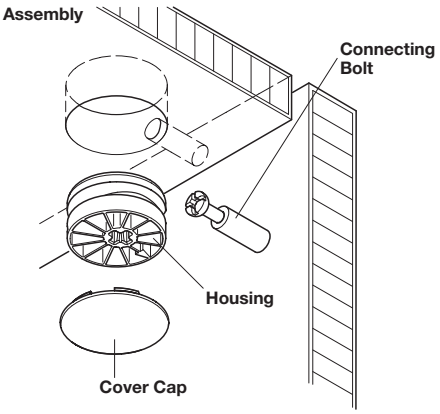

→ Cover Cap

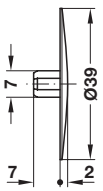

- > Material: Plastic

Color	Item No.
white	262.87.790
brown	262.87.190
black	262.87.390

Dimensional data not binding. Dimensions in mm, inches are approximate. We reserve the right to alter specifications without notice.

Maxifix® System

ixconnect

→ Connecting Bolt

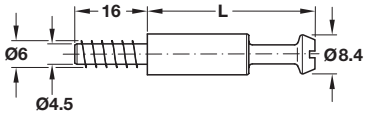

> For drilling Ø5 mm
> For Ø9 mm hole
> Material: Steel; Finish: zinc-plated

Drilling distance	L	Item No.
35	28.5	262.87.931
55	48.5	262.87.932

→ Connecting Bolt

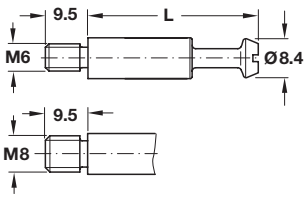

> With M6 or M8 thread
> For Ø9 mm hole
> Material: Steel; Finish: zinc-plated

Thread	Drilling distance	L	Item No.
M6	35	28.5	262.87.901
M8	35	28.5	262.87.911
	55	48.5	262.87.912

→ Steel Socket

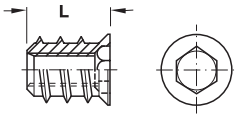

> With hex head
> Material: Steel; Finish: yellow galvanized

Thread	Hole Ø	L	Item No.
M6	8	15	030.10.564
	8	17	030.10.565
M8	10	17	030.10.585

→ Double Bolt

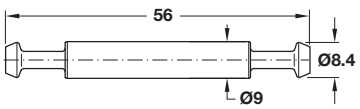

> Drilling distance: 2 x 35 mm
> Material: Steel

Finish	Item No.
zinc-plated	262.87.921

Dimensional data not binding. Dimensions in mm, inches are approximate. We reserve the right to alter specifications without notice.

Red Jig

ixconnect

→ Basic Jig

> Continuously adjustable for different material thicknesses
> With lasered scale for aligning the insert plates
> Material: Aluminum, anodized

Color	Item No.
red	001.25.600

Supplied With
Basic jig
3 Front edge inserts Ø8 mm

Note
Please order accessories separately, below.

→ Drill Guides

> Slides into basic jig
> Material: Aluminum, anodized; Color: red

Version	Item No.
For Minifix 12/15	001.25.660
For Rafix 20	001.25.625
For series drilled holes 37/60, group of holes	001.25.620
For concealed hinges Ø35, 45/9.5	001.25.732

→ Depth Gauges

> With spring and depth stop
> Order appropriate drill bit separately
> Material: Aluminum, anodized; Color: red

Version	Item No.
15, drill bit Ø up to 5–10	001.25.770
32, drill bit Ø up to 12–25	001.25.771
48, drill bit Ø up to 26–40	001.25.772

→ Stop Ring, optional

> For HS twist drill bit

Bit Ø	Item No.
8	001.42.683
10	001.42.693

→ Insert, optional

Ø	Item No.
8	001.25.760
10	001.25.761

→ Marking Pin, optional

> Ø: 3/5 mm

	Item No.
	001.25.766

→ Marking Gauge

	Item No.
	001.27.060

Dimensional data not binding. Dimensions in mm, inches are approximate. We reserve the right to alter specifications without notice.

→ Twist Drill Bit for Depth Gauge 15

> Length: 130 mm x 8 mm shank

Ø	Item No.
5 (3/16")	001.06.683
8 (5/16")	001.06.686
10 (25/64")	001.06.687

→ Forstner Drill Bit for Depth Gauge 32 and 48

> Length: 139 mm x 10 mm shank

Ø	Item No.
12 (15/32")	001.24.489
15 (19/32")	001.24.443
20 (25/32")	001.24.425
20 (25/32") countersunk	001.24.426
35 (1 3/8")	001.24.351

→ Brad Point Drill Bit for Minifix Bolt

> 1/4" hex shank

Ø	Item No.
8 (5/16")	001.20.508

Dimensional data not binding. Dimensions in mm, inches are approximate. We reserve the right to alter specifications without notice.

Häfele Ixconnect K 32/20 Cabinet Connector

ixconnect

> With dowels
> Clip-part with tightening element
> Male element
> Allows practical sub-assembly
> Snap-in feature
> Extremely high corner stability
> Material: Zinc die-cast; Finish: nickel-plated

→ Clip Connector

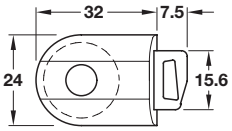

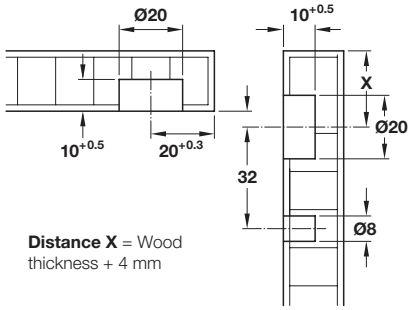

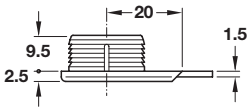

Distance X = Wood thickness + 4 mm

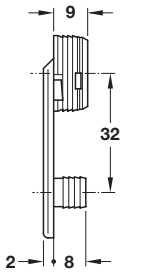

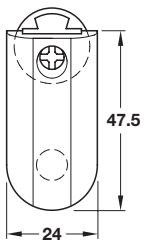

Item No.
263.00.729

Mounting diagram

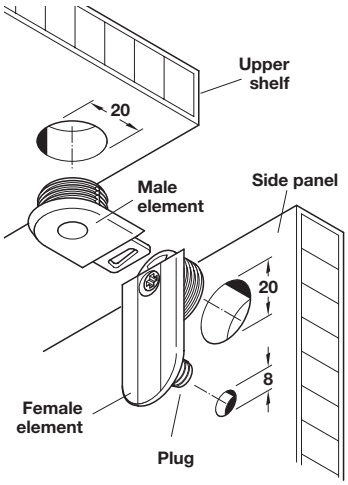

Typical Installations

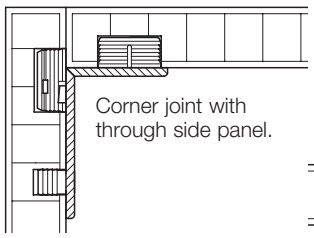

Corner joint with through side panel.

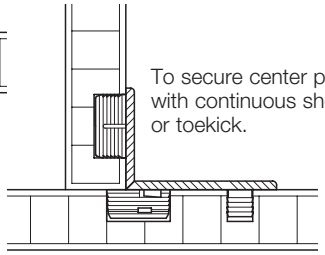

To secure center partition with continuous shelf or toekick.

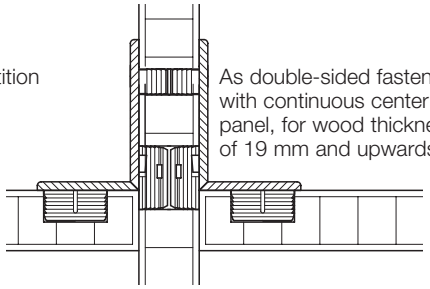

As double-sided fasteners with continuous center panel, for wood thicknesses of 19 mm and upwards.

Function diagram

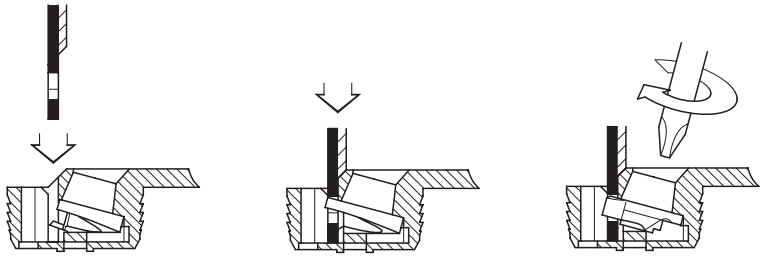

Insertion engagement tensioning

Dimensional data not binding. Dimensions in mm, inches are approximate. We reserve the right to alter specifications without notice.

Häfele Ixconnect SC 8/25

ixconnect

- For use as cabinet connector in small furniture
- Easy installation without tools
- For concealed, permanent cabinet connections in small furniture and drawers, for use in MDF and chipboard, can be used in combination with wood dowels (optional)
- For wood thickness: from 15 mm (9/16")
- For press fitting into drill hole Ø8 mm (5/16") without tools or glued
- Both bolt components expand synchronously in the drill hole when pushing the panel components together
- Material: Plastic; Color: gray/red

→ Spreading Connector

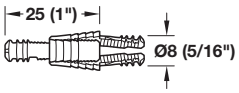

	Item No.
	262.11.112

Drilling Patterns

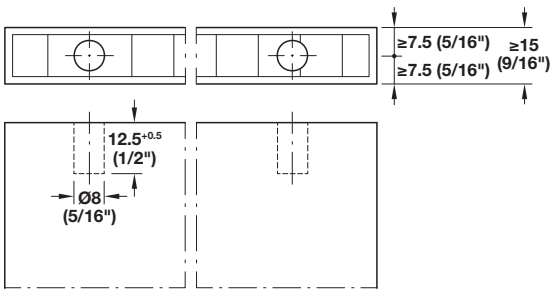

Front edge drill hole

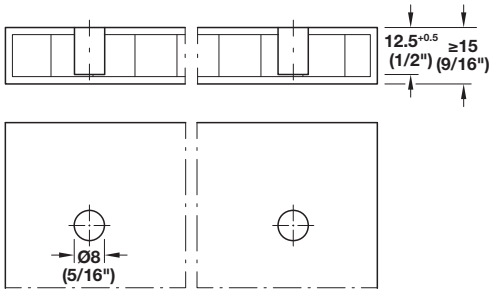

Surface drill hole

Installation

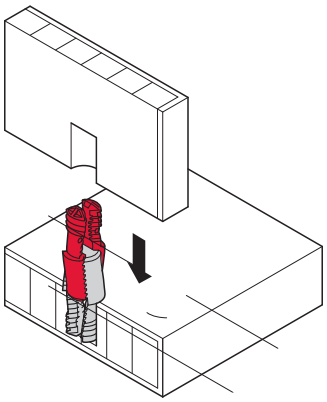

1. Push bolt into drill hole

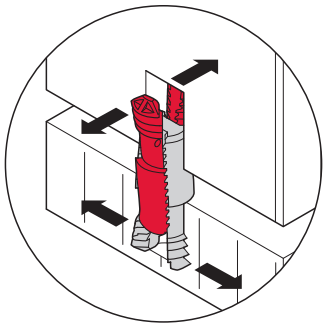

2. Push both panel components together, both bolt components expand synchronously in the drill hole

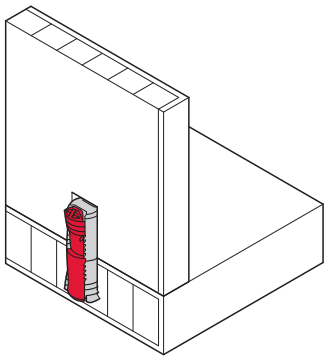

3. Completely concealed, permanent connection

Dimensional data not binding. Dimensions in mm, inches are approximate. We reserve the right to alter specifications without notice.

Häfele Ixconnect SC 8/60

ixconnect

> One-piece connector
> Can also be used as cabinet connector for large furniture items
> Quick and easy installation
> For concealed applications, only a Ø6 mm (1/4") drill hole for securing the connector is visible after installation
> Separable connection
> For concealed installation of cabinet connections in chipboard
> For wood thickness: from 15 mm (5/8")
> Plug fits into drill hole Ø8 mm (5/16") without tools, the connector expands with a 180° turn of the tightening screw with SW3 hexagon socket.
> Material: Plastic/Zinc Alloy; Color: red/gray

→ Spreading Connector

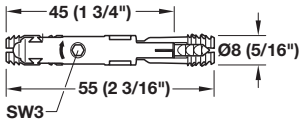

Installation
1. Join components using connector
2. Turn by 180°: The connector expands and the components are pulled together

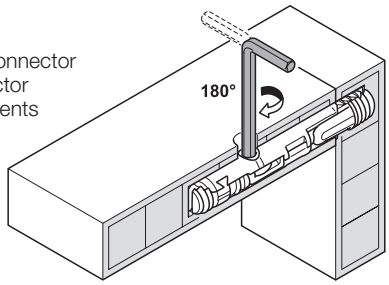

Drilling Pattern

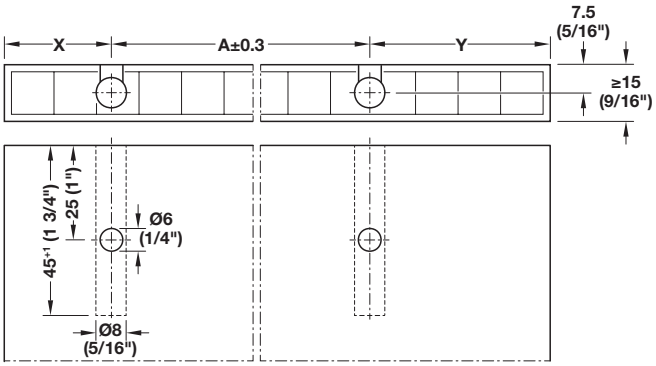

Shelf preparation details
Drill Ø8 mm (5/16") hole
The Ø6 mm (1/4") drill hole can be drilled from above or underneath

Item No.
262.11.117

Drilling Pattern

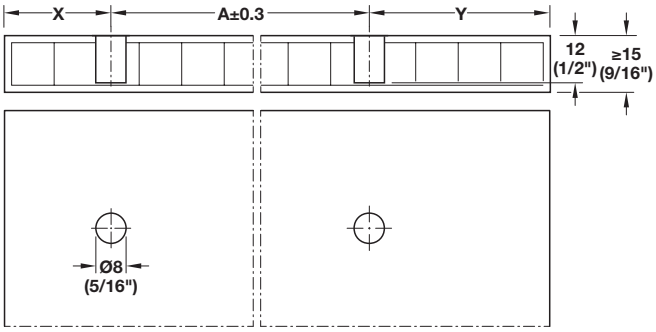

Side panel preparation details

→ Drilling Jig

> For Häfele Ixconnect SC 8/60
> Provides precise drilling in side panel and shelf
> 6 mm sleeves for drill hole in shelf (activation of spreading connector with hex key SW3)
> For panel thicknesses: 15, 16, 18 and 19 mm

Color	Item No.
black	001.25.085

→ Hex Key, straight

> 3 mm
> Material: Steel

Finish	Item No.
black	008.28.035

→ Hex Socket Bit

> Size 3
> Material: Hardened Tool Steel

Item No.
006.37.930

Dimensional data not binding. Dimensions in mm, inches are approximate. We reserve the right to alter specifications without notice.

Häfele Ixconnect RPC G 13/20

ixconnect

- Easy installation without tools
- No additional drill hole is needed
- Suitable for concealed applications as connector is installed on the rear side of the furniture
- Plug fitting into groove
- For fixing the rear panel in small furniture, for use as vibration protection in wood drawers
- For wood thickness: from 12 mm (1/2")
- Material: Plastic

→ Rear Panel Connector

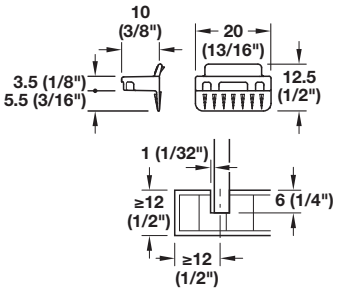

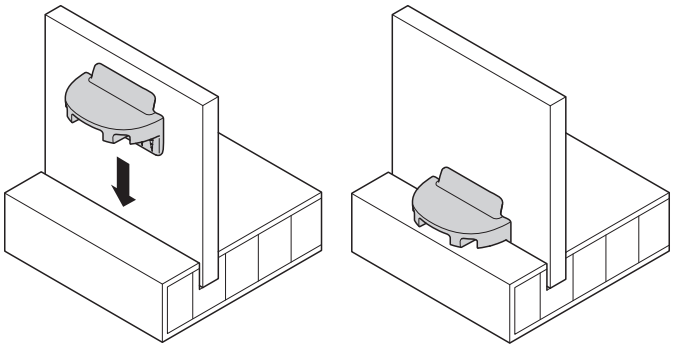

Color	Item No.
gray	260.09.560

Häfele Ixconnect RPC S 15/25

- Screw mounts from the front which allows mounting of large furniture items on the final installation location
- Pre-positioning possible
- One-piece includes pre-mounted screw
- Processing of rear panel not required
- Removable
- For wood thickness: from 15 mm (9/16")
- Groove depth: <6 mm (1/4")
- For drill hole Ø: 15 mm (9/16")
- Rear panel thickness: 2.5–3.5 mm (1/8")
- Pre-inserted into a drill hole in the groove and serves as a guiding and mounting aid for the rear panel
- When the screw is screwed in, the rear panel is pulled forward and stiffens the furniture item accordingly
- Material: Plastic

→ Rear Panel Connector

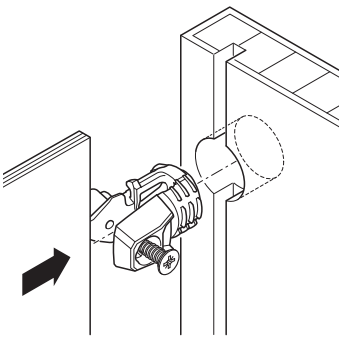

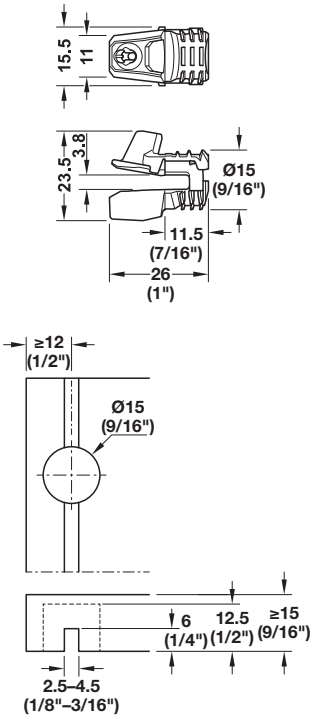

Color	Item No.
white	260.09.765

Dimensional data not binding. Dimensions in mm, inches are approximate. We reserve the right to alter specifications without notice.

Häfele Ixconnect CC 8/5/30

Installation

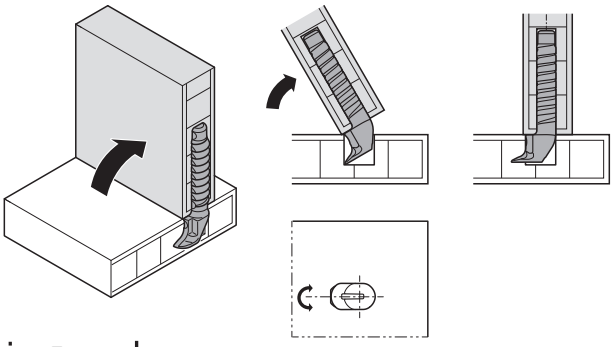

ixconnect

Tolerance for aligning the claw: ±3° (1/8")

- > For fixing front panels of wood drawers
- > One-piece connector
- > Suitable for thin front panels
- > Concealed application
- > Easy assembly without tools
- > Removable
- > Front panel and drawer sides wood thickness: from 12 mm (1/2")
- > Drill hole Ø: 5 mm (3/16") and 8 mm (5/16")
- > Pre-assembly in the drawer side by screwing or press fitting the connector into the 5 mm (3/16") drill hole, the connector grips into the 8 mm (5/16") drill hole of the front panel when the drawer side is raised providing a secure connection
- > Material: Zinc Alloy, bright

→ Claw Connector

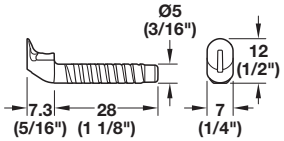

Item No.
262.11.113

Drilling pattern

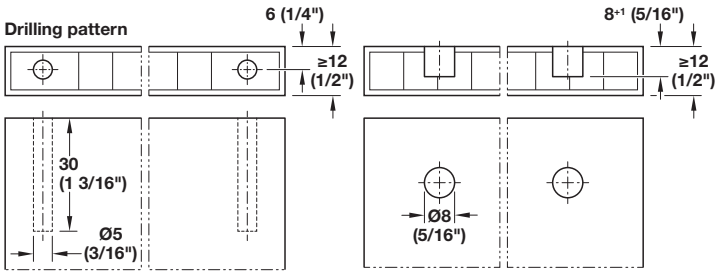

Drill hole in drawer side

Drill hole in front panel

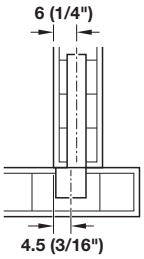

Dimensional data not binding. Dimensions in mm, inches are approximate. We reserve the right to alter specifications without notice.

Häfele Ixconnect RPC D 5/24

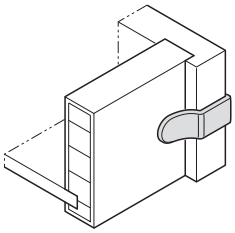

ixconnect

> For wood drawers with groove mounted rear panel
> Easy assembly without tools
> Reduced drilling work
> One-piece
> Removable
> Drawer sides wood thickness: 12–13 mm (15/32"–1/2")
> Rear panel thickness: from 10 mm (3/8")
> For push fitting into Ø5 mm (3/16") drill hole
> Clamped connection of rear panel and drawer sides
> Material: Plastic; Color: gray

→ Rear Panel Connector

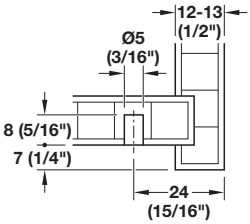

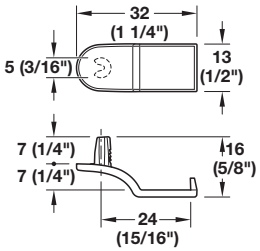

	Item No.
	262.11.115

Note
Recommended number of rear panel connectors on each side:
> Cabinet height < 100 mm (4"): 1 connector (position: Central)
> Cabinet height > 100 mm (4"): 2 connectors (position: Outer thirds of drawer side height)

Dimensional data not binding. Dimensions in mm, inches are approximate. We reserve the right to alter specifications without notice.

Lamello Cabineo Cabinet Connector

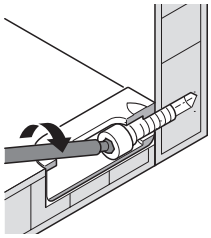

> Corner and center panel connections, for use with CNC; edge drillings are not required
> Pre-mounted for quick and easy installation; additional dowels and screws are not required
> High clamping force ensures a solid, positive-fit connection
> Separable
> Easily transported, flat pack delivery
> For use with or without cover caps

→ Cabineo

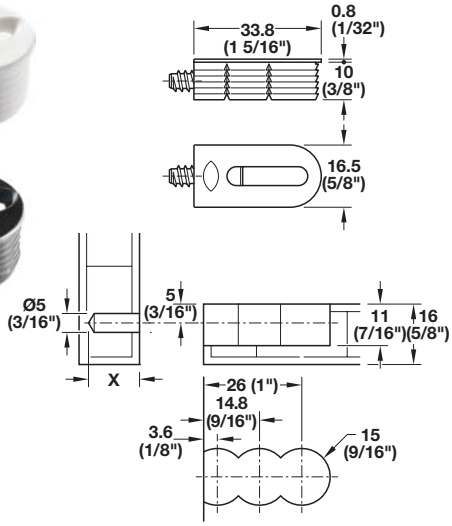

> Press-fits into base panel and screw mounts into side panel with Ø5 mm drill hole
> For wood thickness: Cabineo 8: from 12 mm, center panel from 16 mm; Cabineo 12: from 16 mm
> Material: Plastic, fiberglass reinforced; Screw: Steel

Version	Dim. X	Color	Item No.	Packing
Cabineo 8	8	white	267.91.251	500 pcs.
			267.91.271	2000 pcs.
		black	267.91.253	500 pcs.
			267.91.273	2000 pcs.
Cabineo 12	12	white	267.91.252	500 pcs.
			267.91.272	2000 pcs.
		black	267.91.254	500 pcs.
			267.91.274	2000 pcs.

→ Driver Bits

> 1/4" drive with 4 mm ball tipped hex driver

Length	Item No.	Bulk
120	001.26.605	-
80	006.40.002	006.40.003

Bulk Supplied With
100 pcs./pkg.

→ Cover Caps

> Material: Plastic

Color	Item No.
signal white RAL 9003	267.91.267
brown beige RAL 1011	267.91.264
window gray RAL 7040	267.91.265
papyrus white RAL 9018	267.91.268
mouse gray RAL 7005	267.91.263
black RAL 9005	267.91.262
dark steel	267.91.257
nickel	267.91.258
silver	267.91.259

Supplied With 100 pcs.

Note The colors indicated are similar to RAL colors and are as close as possible to the actual standard colors, but may vary slightly in production.

→ Cabineo Starter Kit

	Item No.
signal white RAL 9003	267.91.200

Supplied With 40 Cabineo 8, 40 Cabineo 12, 40 Cover caps, 120 mm SW4 hex bit with ball head

→ Screwdriver with 1/4" Bit Holder

> For screw fixing the Lamello Cabineo connector

	Item No.
	001.26.604

Dimensional data not binding. Dimensions in mm, inches are approximate. We reserve the right to alter specifications without notice.

Lamello Cabineo Cabinet Connector

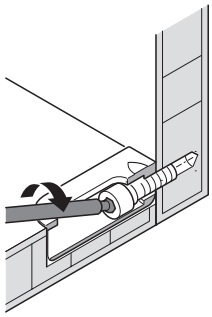

> Corner and center panel connections, for use with CNC; edge drillings are not required
> Pre-mounted for quick and easy installation; additional dowels and screws are not required
> High clamping force ensures a solid, positive-fit connection
> Separable
> Easily transported, flat pack delivery
> For use with or without cover caps

→ Cabineo 8 M6

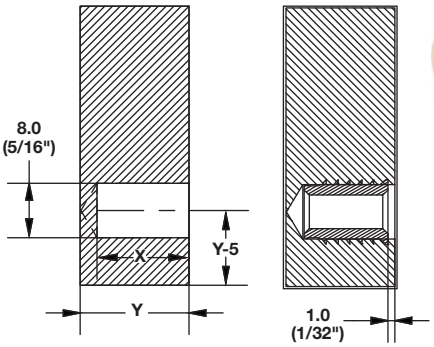

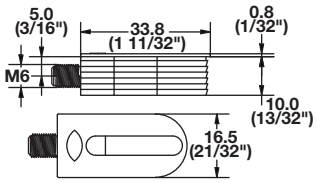

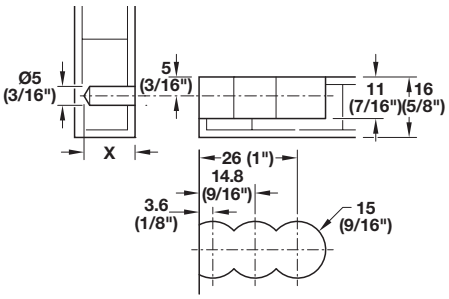

> Press-fits into base panel and screw mounts into side panel with M6 threaded insert
> Material: Plastic, fiberglass reinforced; Screw: Steel

Color	Item No.	Packing
white	267.91.310	500 pcs.
white	267.91.311	2000 pcs.
black	267.91.312	500 pcs.
black	267.91.313	2000 pcs.

→ Cabineo 8 M6 Insert Nut

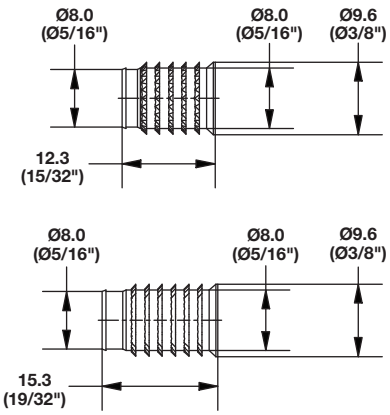

> Installs in side panel to accept Cabineo 8 M6 fitting
> For wood thickness: M6x 12.3 mm insert: 14–16 mm
> M6x 15.3 mm insert: 17–25 mm
> Material: Brass

Insert size	Dim. X	Dim. Y	Item No.	Packing
M6 x 12.3	13.5	14–16	267.91.314	100 pcs.
M6 x 12.3	13.5	14–16	267.91.315	500 pcs.
M6 x 15.3	16.5	17–25	267.91.316	100 pcs.
M6 x 15.3	16.5	17–25	267.91.317	500 pcs.

→ Cabineo 8 M6 Starter Kit

	Item No.
	267.91.319

Supplied With
80 Cabineo 8 M6
40 Cabineo 8 M6 insert nut
40 Cabineo cover caps, signal white RAL 9003
1 Cabineo insert nut installation tool
120 mm SW4 hexagon bit with ball head

→ Cabineo Insert Nut Installation Tool

	Item No.
	267.91.318

Dimensional data not binding. Dimensions in mm, inches are approximate. We reserve the right to alter specifications without notice.

Dowel/Cam Connector

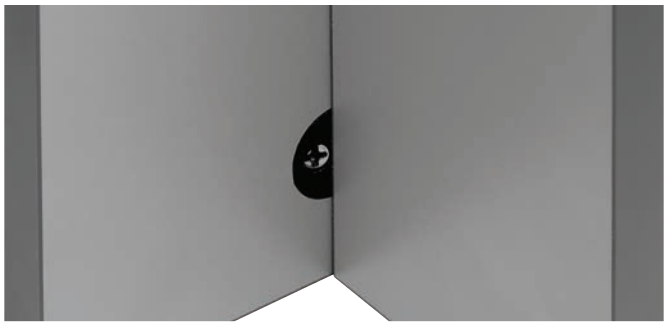

→ DC-25

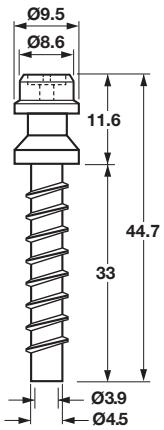

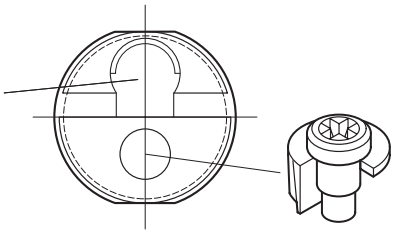

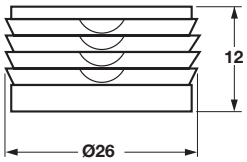

> For 12 mm and 25 mm
> Dowel is inserted into edge of shelf
> Cam is inserted into upright
> Panels can be stacked after connector is installed
> Material: Cam housing: Plastic
Connector screw: Zinc, die-cast

Color	Item No.
white	261.95.700
brown	261.95.100

Recommended drilling for 19 mm (3/4") material

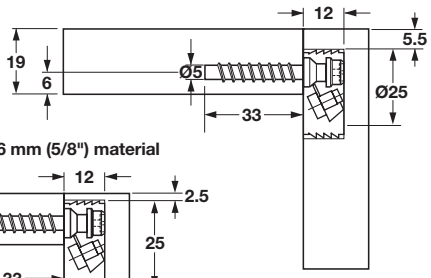

Recommended drilling for 16 mm (5/8") material

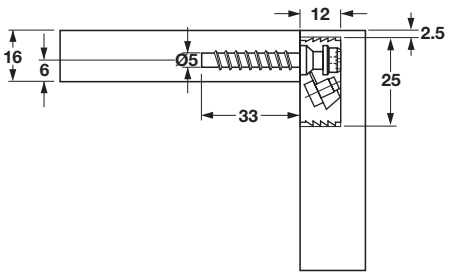

→ RTA Fitting

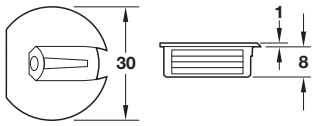

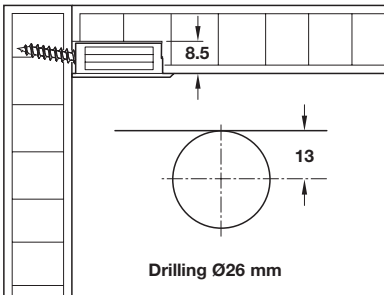

Drilling Ø26 mm

> Press-fit
> Housing recess: Ø26 mm
> Material: Plastic

Color	Item No.
beige	262.43.489

Dimensional data not binding. Dimensions in mm, inches are approximate. We reserve the right to alter specifications without notice.

Confa 35

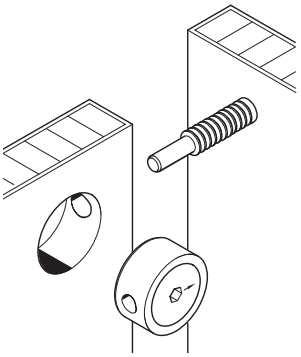

ixconnect

> For very sturdy and heavily loaded joints
> Long travel distance
> Quickly tightened
> Can be tightened with 6 mm hex key
> A cordless drill can be used for quick assembly

→ Recessed Universal Connector

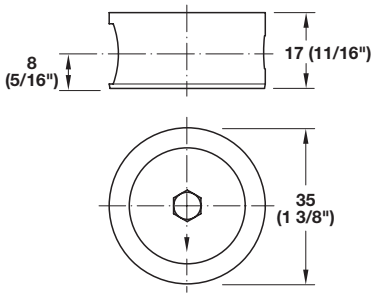

> Material: Housing: Zinc die-cast
> Tightening element: Steel, unfinished

Wood thickness	Dimension A mounting center	Drilling depth	Item No.
From 24	1/2 wood thickness	1/2 wood thickness + 8	262.69.009

→ Connecting Bolt

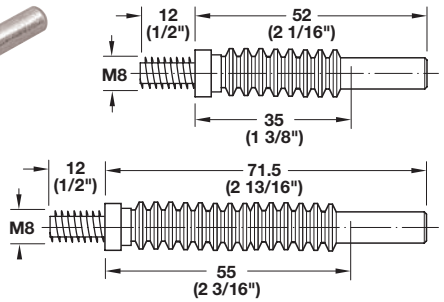

> With M8 thread
> Ø:10.5 mm
> Material: Steel; Finish: zinc-plated

Drilling distance	Item No.
35	262.69.036
55	262.69.045

The connecting bolts on this page can be used with the following parts:

→ M8 Screw Socket

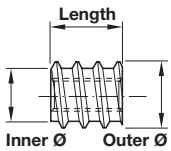

> With screw slot
> Material: Steel, unfinished

Outer Ø	Inner Ø	Length	Item No.
14	11.5	15	030.00.404
16	12	18	030.00.422

→ Hex Key

> 6 mm
> Material: Steel

Finish	Item No.
zinc-plated	008.28.260

Dimensional data not binding. Dimensions in mm, inches are approximate. We reserve the right to alter specifications without notice.

Quick Dowel Two-Part Connector

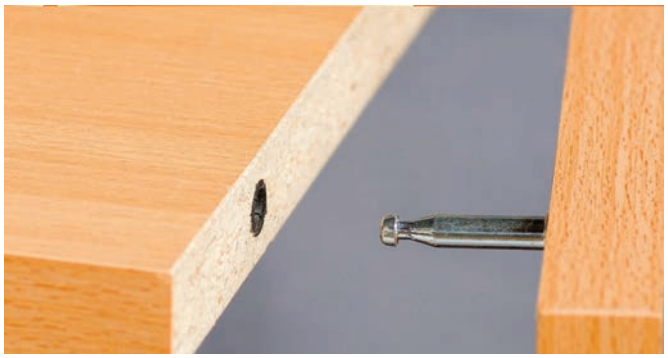

> Use as a quick connector for decorative moulding or trim pieces
> Use as a complete case connector or in conjunction with dowels as a clamping device
> Fast, one-time, non-releasable connector
> A complete connection requires 1 bolt & 1 insert (sold separately)

→ Bolt

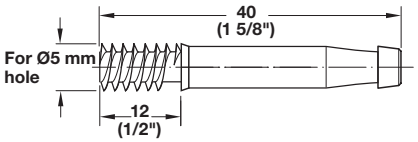

> Material: Steel

Finish	Item No.
zinc-plated	262.91.910

→ Insert

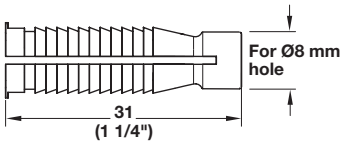

> Drilling depth: 32 mm
> Material: Plastic

Color	Item No.
black	262.91.320

Dimensional data not binding. Dimensions in mm, inches are approximate. We reserve the right to alter specifications without notice.

Surface Mounted Connectors

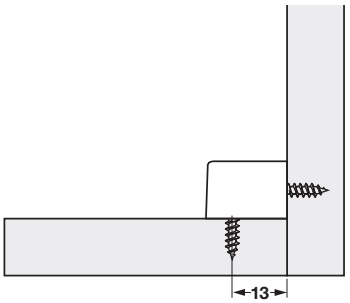

→ Surface Connector

Flat Head #6

Shown in black

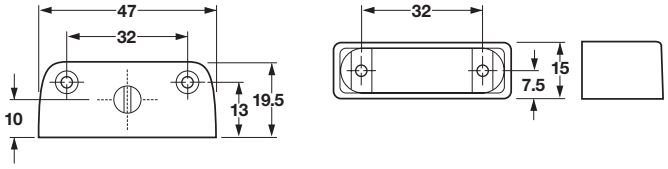

> Screw mounted
> Material: Plastic

Color	Item No.
white	261.16.710

→ Uno I RTA Connector

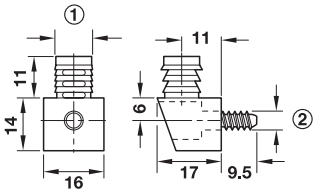

① for drill hole Ø10 mm
② for drill hole Ø5 mm

> Screw mounted in Ø5 mm hole to side panel and press fitting into Ø10 mm hole in side panel
> Material: Plastic

Color	Item No.
white	262.41.707
brown	262.41.109

→ Surface Connector

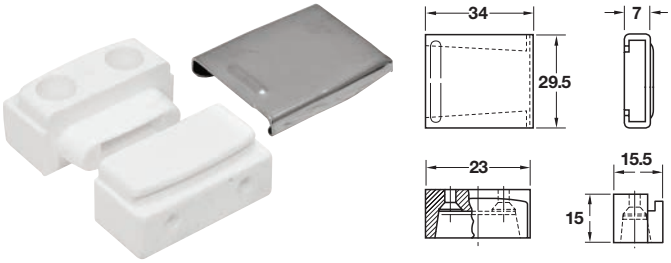

Flat Head #6

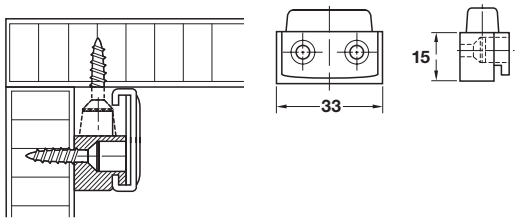

> Two rectangular, screw mounted elements (male and female, with taper effect), provide a secure interlocking grip, locked together by a clamping plate
> Material: Clamping plates: Steel
Mounting elements: Plastic

Color	Item No.
white	262.67.701

Supplied With
2 Elements

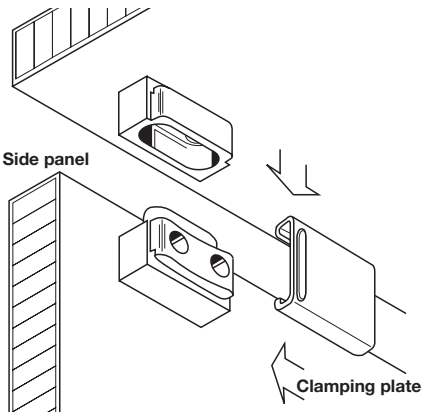

Flat head screws pages 12.7-12.8, 12.10, 12.13

Dimensional data not binding. Dimensions in mm, inches are approximate. We reserve the right to alter specifications without notice.

Confirmat

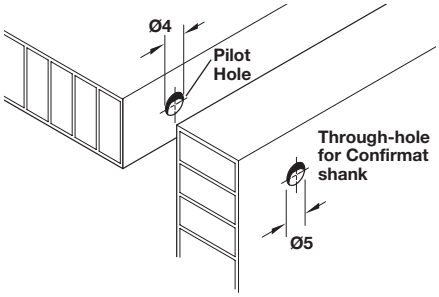

> Long shank, deep-cut thread ensures accurate, close-fitting joints between panels
> High pull-out resistance and strength at the corners
> Only a single drilling operation for side panels and shelves
> Consistently secure joints are assured even with repeated assembly and disassembly

→ Self-Countersinking Connector

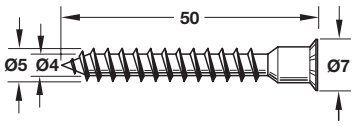

> With cross-slot drive head and pointed tip
> Trim caps are not available
> Length: 50 mm (2")
> Shank: Ø5 mm (3/16")
> Head: Ø7 mm (9/32")
> Material: Steel

Finish	Hex socket head 3 mm	Pozi drive size 2
zinc-plated	264.39.191	264.40.191

Supplied With
1000 pcs.

→ Countersunk Connector

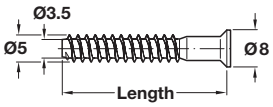

> Drill hole: Ø4 mm (5/32")
> Shank: Ø5 mm (3/16")
> Head: Ø8 mm (5/16")
> Material: Steel; Finish: zinc-plated

Length	Pozi drive size 2 drilled head, Ø2.4 mm	Hex socket head 3 mm
38 (1 1/2")	264.37.098	-
40 (1 5/8")	-	264.39.092
50 (2")	264.37.196	264.39.190

Supplied With
1000 pcs.

→ Cylinder Head Connector

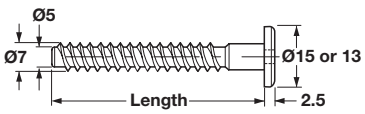

> Trim caps are not available
> Drill hole: Ø5 mm (3/16")
> Shank: Ø7 mm (9/32")
> Head: Ø13 (1/2") or Ø15 mm (9/16")
> Material: Steel

Finish	Length	13 Hex socket head 4 mm	15 Hex socket head 4 mm
nickel-plated	50 (2")	264.43.120	264.47.174
bronzed	50 (2")	264.43.140	264.47.138
nickel-plated	70 (2 3/4")	-	264.47.272
bronzed	70 (2 3/4")	-	264.47.236
black	70 (2 3/4")	264.43.184	-

Supplied With
1000 pcs.

Dimensional data not binding. Dimensions in mm, inches are approximate. We reserve the right to alter specifications without notice.

Confirmat

→ Trim Cap

> Ø:12 mm (15/32")
> Press-fit in Confirmat head

Color	Item No.
brown	045.18.101
black	045.18.307
white	045.18.709
pine	045.18.209
almond	045.18.450

Supplied With
5000 pcs.

→ Screwdriver Bit

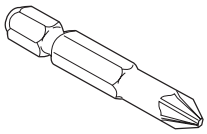

> Cross-slot Z
> Material: Hardened Tool Steel

Size	Item No.
2	006.37.285
3	006.37.294

Supplied With
25 pcs.

→ Hex Socket Bit

> Material: Hardened Tool Steel

Size	Item No.
4	006.37.945
3	006.37.930

Dimensional data not binding. Dimensions in mm, inches are approximate. We reserve the right to alter specifications without notice.

Confirmat

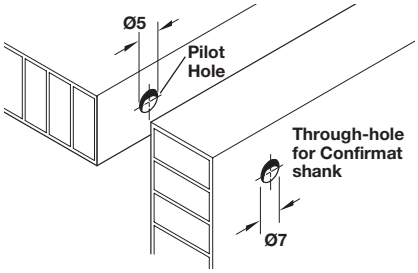

> Extremely strong
> With tip for easy insertion into blind hole
> Countersink is not necessary as the nibs countersink hole

→ Self-Countersinking Connector

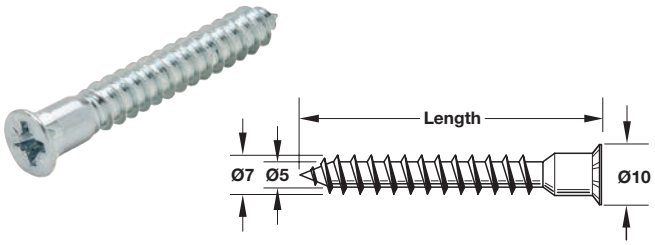

> With pointed tip
> Shank: Ø7 mm (9/32")
> Head: Ø10 mm (3/8")
> Material: Steel; Finish: zinc-plated

Length	Pozi drive size 3	Hex socket head 4 mm
50 (2")	264.44.190	264.43.164
70 (2 3/4")	264.44.194	-

Supplied With 1000 pcs.

→ Countersunk Connector

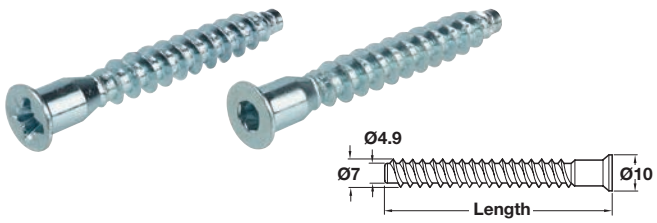

> Drill hole: Ø5 mm (3/16")
> Shank: Ø7 mm (9/32")
> Head: Ø10 mm (3/8")
> Material: Steel

Finish	Length	Pozi drive size 3	Hex socket head 4 mm
zinc-plated	40 (1 5/8")	264.42.091	-
zinc-plated	50 (2")	264.42.190	264.43.600
bronzed	50 (2")	264.42.133	264.43.130
black	50 (2")	-	264.43.111
zinc-plated	70 (2 3/4")	264.42.291	-

Supplied With 1000 pcs.

→ Self-Countersinking Connector

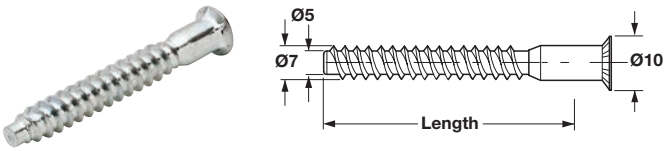

> With tapered tip
> Drill hole: Ø5 mm (3/16")
> Shank: Ø7 mm (9/32")
> Head: Ø10 mm (3/8")
> Material: Steel; Finish: zinc-plated

Length	Pozi drive size 3	Hex socket head 4 mm
50 (2")	264.44.180	264.43.160

Supplied With
1000 pcs.

→ Trim Caps

> Press-fit in Confirmat head
> Material: Plastic

Color	Ø12 (15/32")	Ø15 (9/16")	Ø12 (15/32")
white	045.01.704	045.01.713	045.01.731
pine	045.01.008	-	-
black	045.01.302	045.01.311	045.01.339
almond	045.01.455	-	-

Supplied With 1000 pcs.

→ Step Bits

> For Confirmat installation
> Material: HSS

Size	Item No.
148.5L 4/5/8	001.22.663
150L 5/7/10	001.22.645

Dimensional data not binding. Dimensions in mm, inches are approximate. We reserve the right to alter specifications without notice.

Connectors

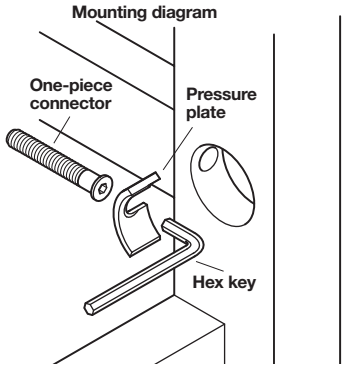

> High degree of angular rigidity
> Above average pull resistance
> Suitable for upholstered furniture bases, solid wood table and chair frames
> Completely invisible from the exterior

→ Confir-Plan® Universal Fitting

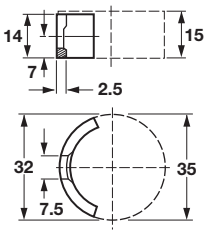

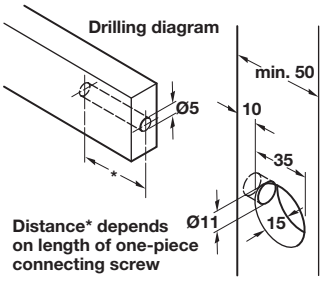

> Material: Steel

Finish	Item No.
blue galvanized	260.51.910

→ Hex Key

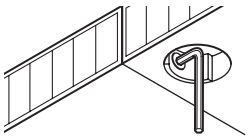

> 4 mm
> For tightening Confirmat one-piece connector
> Material: Steel

	Item No.
	008.28.044

→ One-Piece Connector

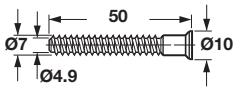

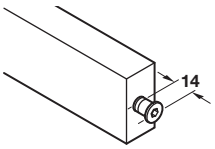

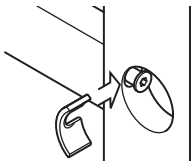

To assemble
Install Confirmat® one-piece connector in stretcher, allowing the head to project enough to install the pressure plate over the screw head. Tighten to secure.

> Designed around the Confirmat® one-piece connector
> Features deep threads which cut into the wood.
> Material: Steel

Finish	Item No.
zinc-plated	264.43.600

Dimensional data not binding. Dimensions in mm, inches are approximate. We reserve the right to alter specifications without notice.

Häfele ixconnect Tab 15 Shelf Connector

ixconnect

> Modern lattice design
> The boss insert locks into the shelf without an additional safety screw
> Installs and disassembles without tools
> For shelf thickness: 16–19 mm
> Secures shelf from tipping; stability is increased when screw mounted
> Drill hole Ø: Support: 3 or 5 mm; Boss insert: 15 mm
> Material: Support: Zinc Alloy; Finish: nickel-plated; Insert: Plastic

→ Connector

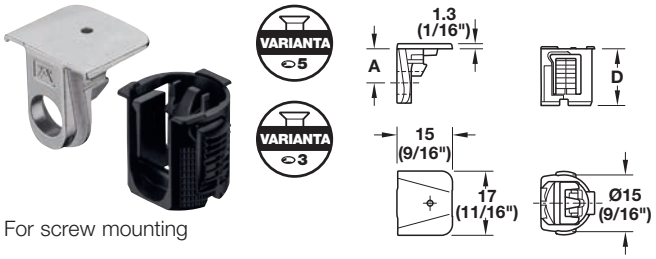

For screw mounting

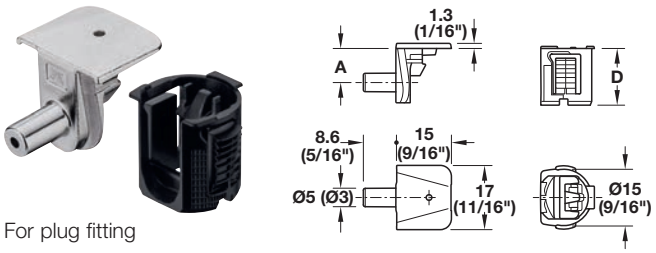

For plug fitting

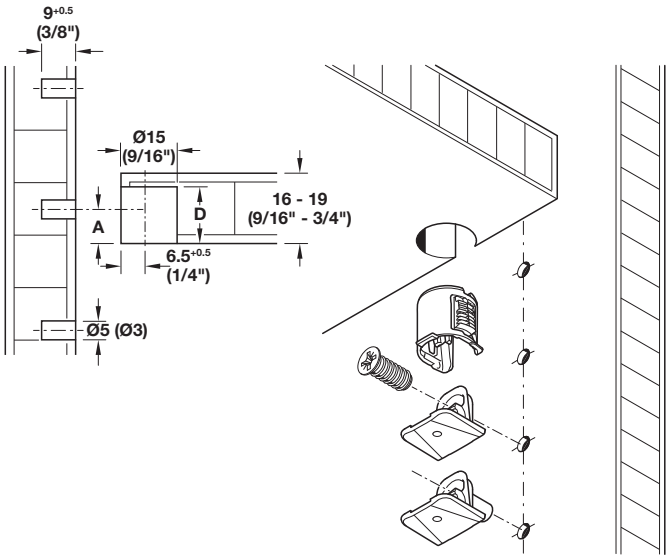

For screw mounting

For wood thickness	Dim. A	Drilling depth D	Item No.
16	8	$13^{+0.2}$	263.73.609
18/19	9	$15^{+0.2}$	263.73.614

For plug fitting into Ø5 mm hole

For wood thickness	Dim. A	Drilling depth D	Item No.
16	8	$13^{+0.2}$	263.73.611
18/19	9	$15^{+0.2}$	263.73.624

For plug fitting into Ø3 mm hole

For wood thickness	Dim. A	Drilling depth D	Item No.
18/19	9	$15^{+0.2}$	263.73.623

Varianta screws page 12.16

Dimensional data not binding. Dimensions in mm, inches are approximate. We reserve the right to alter specifications without notice.

Häfele ixconnect Tab 18 Shelf Connector

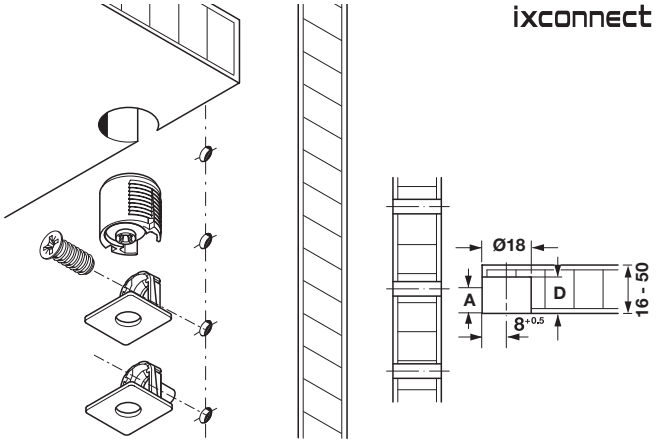

> Excellent angular rigidity and pull-out resistance
> Pulls shelf onto side panel
> Locks shelf to side panel and prevents tipping
> Cup inserts are flush, allowing shelves to be stacked
> Locks and secures shelves into place

Note
Panel insert needed for both zinc supports.

→ Support

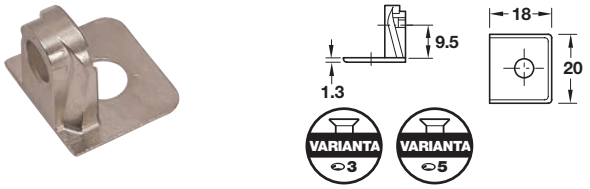

> For Varianta screws
> Material: Zinc

Finish	Item No.
nickel-plated	263.60.556

→ Shelf Insert

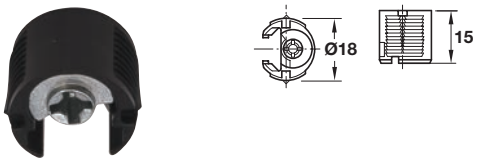

> Material: Plastic; Tightening Element: Zinc Alloy

Color	Item No.
black	263.64.554

Varianta screws page 12.16

→ Support

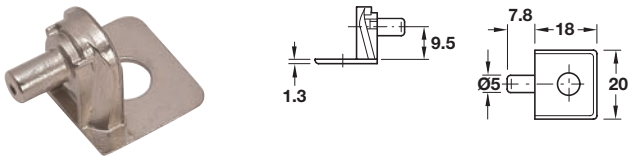

> With 5 mm pins
> Material: Zinc

Finish	Item No.
nickel-plated	263.61.553

→ Insertion Tool

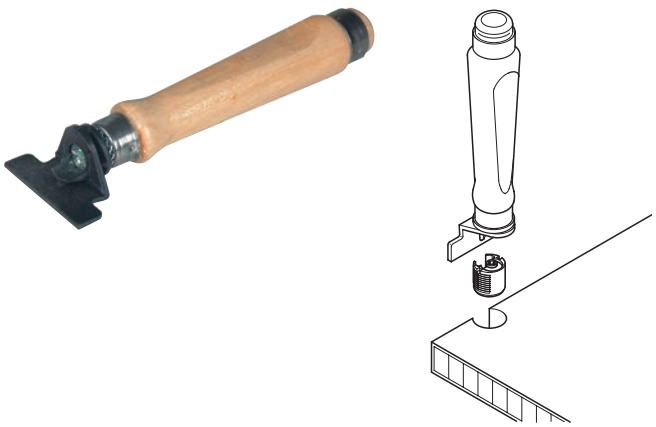

> For easy and precise insertion of the cup inserts
> The tool incorporates a special recess to accommodate the cup insert
> Once the tool has been aligned parallel to the edge of the cabinet, the cup insert is installed with an easy push
> Material: Handle: Hardwood; Ring Reinforcements: Steel
Mount: Plastic

	Item No.
	001.32.749

Note
It is highly recommended to use insertion tool for shelf fastener.

Dimensional data not binding. Dimensions in mm, inches are approximate. We reserve the right to alter specifications without notice.

Häfele ixconnect Rasant-Tab Shelf Connector

ixconnect

→ Support

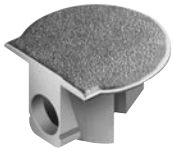
Screw mount

Plug fit

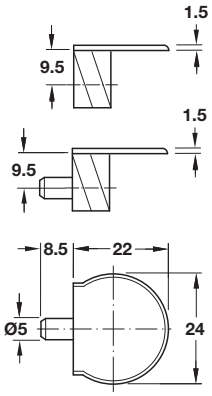

> Wood thickness: 19 mm
> Material: Zinc, die-cast; Finish: nickel-plated

Mounting	Item No.
Screw mount	262.36.570
Plug fit into Ø5 mm holes	262.35.570

→ Shelf Insert

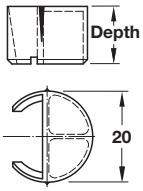

> Wood thickness: 19 mm
> Depth: 14.5 mm
> Material: Plastic

Color	Item No.
black	262.36.073

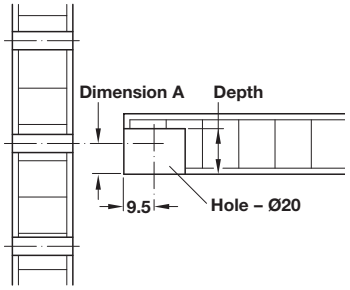

Depth = Depending on Rasant-Type and material thickness
Dimension A = 1/2 material thickness

Example: Center panel application

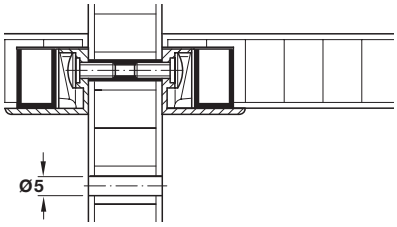

Fastening screws and sleeves	page 11.105
Varianta screws	page 12.16

Dimensional data not binding. Dimensions in mm, inches are approximate. We reserve the right to alter specifications without notice.

Maori Shelf Connector

VARIANTA ⌀3 VARIANTA ⌀5

> Excellent support for fixed or adjustable wooden shelves
> Small footprint creates pleasing aesthetic
> Shelf insert can be secured with Ø3 mm screw
> Stepped drill bit available for proper installation

→ Support

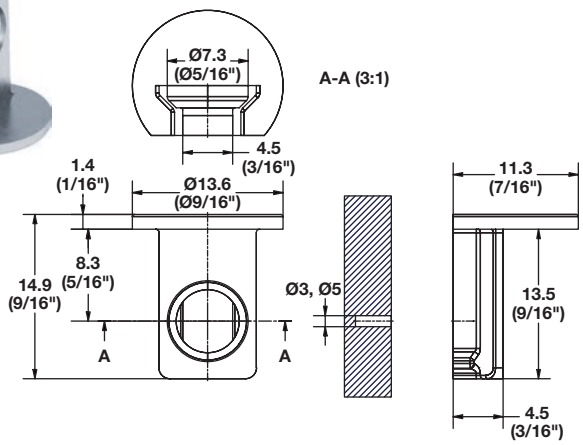

> Material thickness: 19 mm
> Screw mounted
> Material: Zinc

Finish	Item No.
zinc-plated	263.77.752

→ Shelf Insert

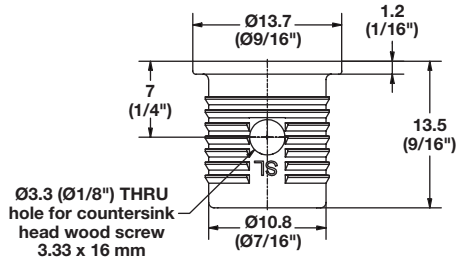

> Material thickness: 19 mm
> Drilling depth: 15 mm
> Material: Plastic

Color	Item No.
gray	263.77.551

→ Step Drill Bit

> For Maori shelf connector installation
> Material: Steel

	Item No.
	001.06.309

Varianta screws page 12.16

Dimensional data not binding. Dimensions in mm, inches are approximate. We reserve the right to alter specifications without notice.

Dovetail Connector

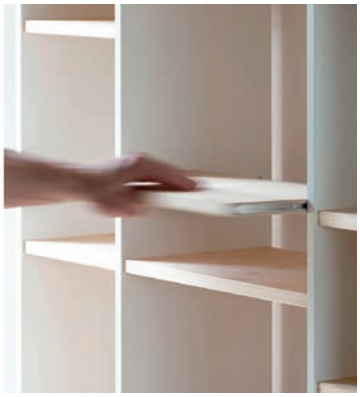

- > Concealed, tool-less installation for shelves
- > Provides solid reinforcing connections; self-reinforces if several shelves are used
- > Stabilizes high and protruding components
- > Easy to dismantle

Installation

1. Mill groove for rail in front edge of shelf, 10.5 x 12 mm (7/16" x 1/2") (H x W), insert rail and attach with screws. Use one flat countersunk head screw at approximately 200 mm (7 7/8") intervals.
2. Attach the dovetail sleeve with a flat countersunk head screw (head Ø < 6 mm (1/4") on opposite side. 6 sleeves per meter is recommended
3. Adjust push-in resistance of rail via tightening torque (screw connection strength) of dovetail sleeve.
4. Slide shelf onto side panel and slide rail onto sleeves.

Note

Set depth of shelf by tightening the rear sleeve more firmly.
Add a depth stop to the structure if necessary.
The tighter the dovetail sleeve screws are tightened, the more difficult it is to slide in and remove the shelves.

Edge or surface milling with profile milling cutter

Comparison of dovetail connector installation directly/with rail

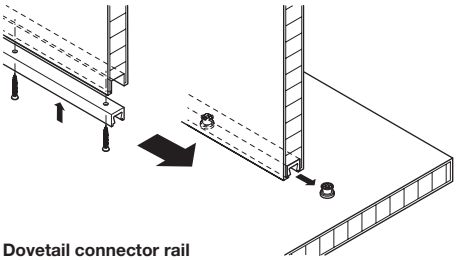

Dovetail connector rail

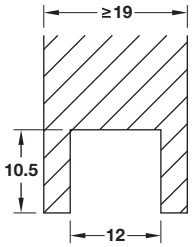

Routing dimensions

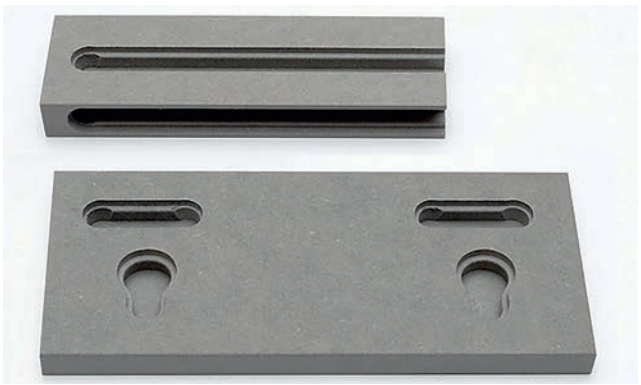

Options for surface connection or edge connection using biscuit jointer with profile groove function

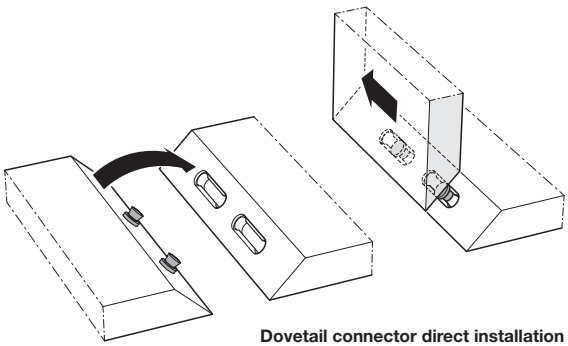

Dovetail connector direct installation

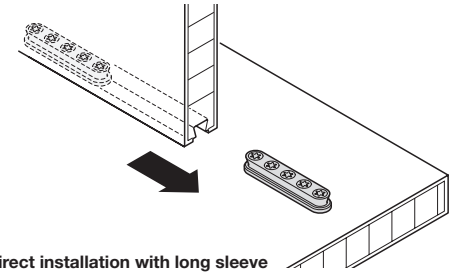

Dovetail connector direct installation with long sleeve

Dimensional data not binding. Dimensions in mm, inches are approximate. We reserve the right to alter specifications without notice.

Dovetail Connector

→ Rail with Dovetail Groove

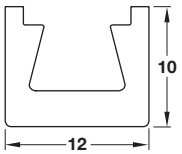

> Length: 3000 mm (118 1/8")
> Material: Aluminum, bright

Version	Item No.
Un-drilled	261.30.030
Pre-drilled, countersunk at 150 (5 7/8") intervals	261.30.031

Note
Special lengths available on request from an order quantity of 100 pcs.

→ Dovetail Sleeve

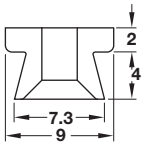

> Screw mounted
> Material: Plastic

Color	Item No.
white	261.30.790

→ Processing Aid Drilling Jig

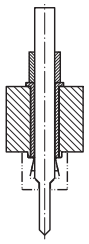

> Features countersink cutter with hardened insert
> Material: Plastic

	Item No.
	261.30.900

→ Long Sleeve for Screw Mounting

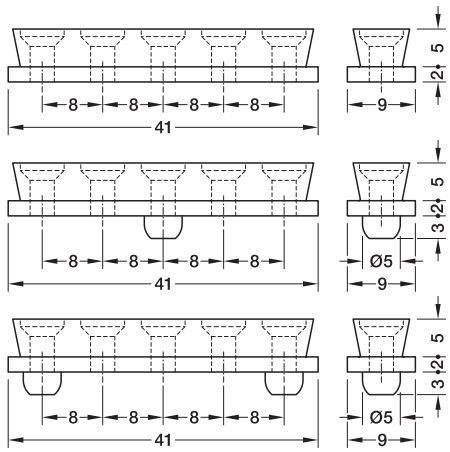

> Dovetail connector direct installation (with recessed mounting profile)
> Length: 41 mm (1 3/4")
> Material: Plastic; Color: white

Version	Item No.
Without positioning dowel	261.30.780
With 1 positioning dowel, central	261.30.781
With 2 positioning dowels 32 mm	261.30.782

→ Biscuit Jointer

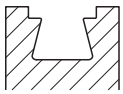

> For milling the groove for fixing profile for dovetail connector directly into the board material
> With profile groove for dovetail connector
> Shank Ø: 8 mm (5/16")
> Length: Total length: 46 mm (1 13/16")
Shank length: 37 mm (1 7/16")
> Material: Hard Metal

	Item No.
	001.60.000

Note
Board material must be verified in advance for respective application.

Flat head screws pages 12.7-12.8, 12.10, 12.13

Dimensional data not binding. Dimensions in mm, inches are approximate. We reserve the right to alter specifications without notice.

This page is left blank intentionally.

Dimensional data not binding. Dimensions in mm, inches are approximate. We reserve the right to alter specifications without notice.

Modular Connectors

→ Non-Locking Connectors

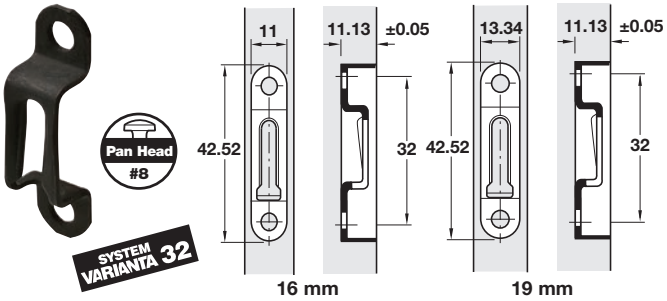

Modular screws
for single-sided installation in wood.

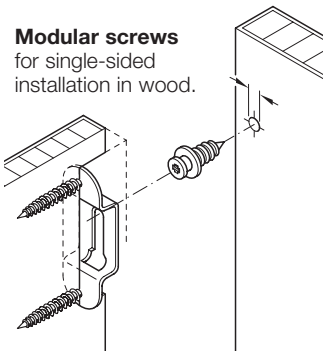

Modular screws
for installation in wood, in series-drilled holes.
Single-sided construction

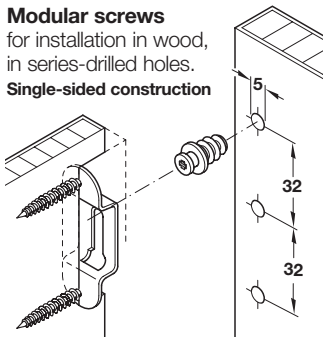

> 32 mm center to center
> Material: Steel; Finish: black phosphate

Panel thickness	Mfg. #	Item No.
16	4032-PH	262.47.313
19	5032-PH	262.47.343

→ Modular Screw

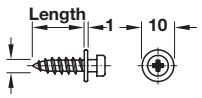

> With wood screw thread
> For installation in Ø4 and Ø5 mm holes
> Material: Steel, galvanized

Length	Hole Ø	Mfg. #	Item No.
12.7	4	1065	262.47.978
16	4	1165	262.47.987
25	4	5069	262.47.996
32	4	5068	262.47.870
16	5	2155	262.47.902

Pan head screws pages 12.9-12.10

→ Non-Locking Connectors

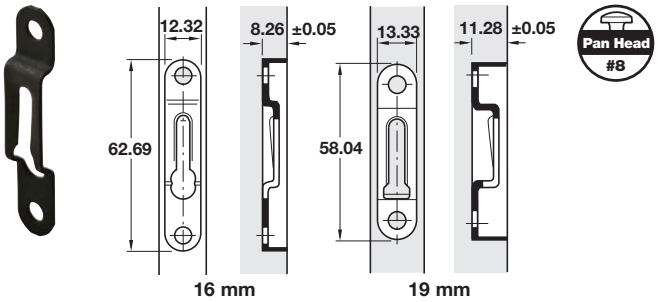

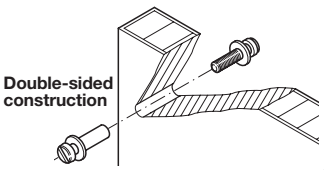

Modular screws
for installation in metal.

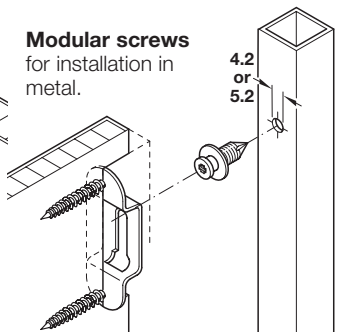

> Material: Steel; Finish: black phosphate

Panel thickness	Mfg. #	Item No.
16	4061-PH	262.47.048
19	5063-PH	262.47.022

→ Modular Screw

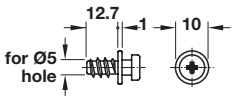

> With special thread
> For installation in Ø5 mm series-drilled holes
> Material: Steel, galvanized

Mfg. #	Item No.
2055	262.47.807

→ Modular Screw

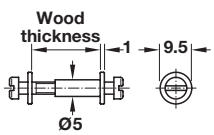

> With M4 thread
> For installation in Ø5 mm series-drilled holes
> Wood thickness: 16–24 mm
> Material: Female: Brass; Male: Steel, galvanized

Mfg. #	Item No.
2065/2066	262.47.923

Dimensional data not binding. Dimensions in mm, inches are approximate. We reserve the right to alter specifications without notice.

Modular Connectors

> For 22 mm panels
> Pan head screws used to attach bracket to panel

→ Non-Locking Connector

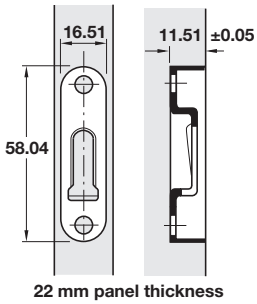

> Material: Steel

Finish	Mfg. #	Item No.
black phosphate	6063-PH	262.47.077

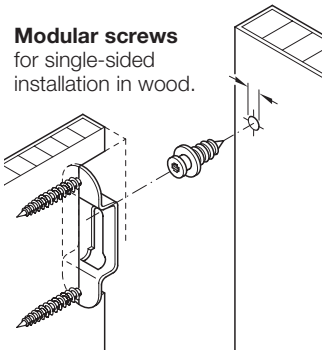

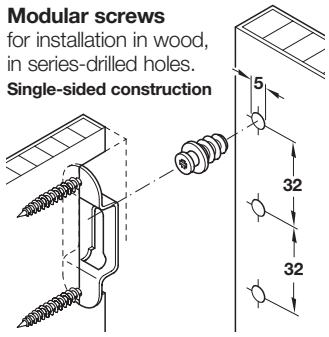

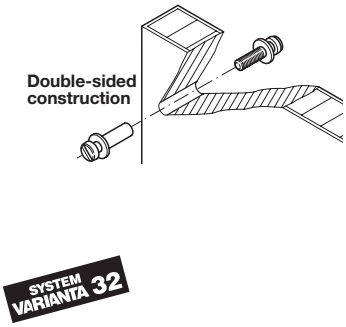

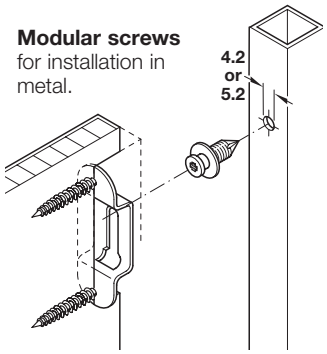

→ Modular Screw

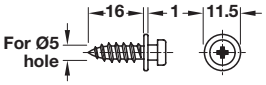

> With wood screw thread
> Material: Steel, galvanized

Mfg. #	Item No.
6165	262.47.889

Pan head screws pages 12.9-12.10

Dimensional data not binding. Dimensions in mm, inches are approximate. We reserve the right to alter specifications without notice.

Self-Clamping Connector

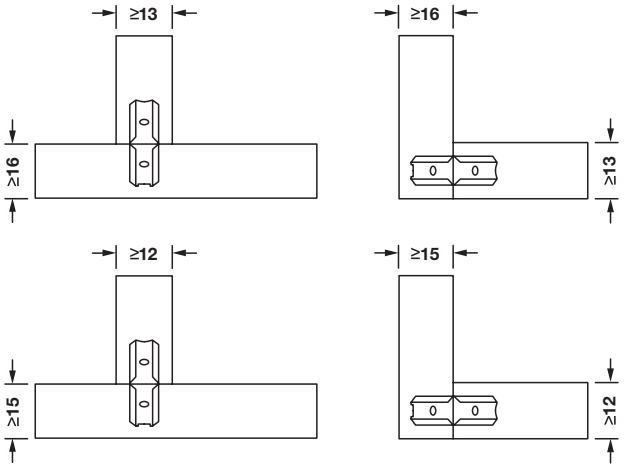

> With pre-loaded facility
> Joins and clamps during insertion for perfectly closed joints
> Insertion of shelves after transport for lower transport weight
> Efficient machining and installation with a Zeta based on the P-System
> Narrow element for the use in material of at least 13 mm thickness
> For use in furniture, store fixtures, exhibitions, book shelves, open room dividers, wine shelves, etc.

P-System

Note
The connector must always be used with glue. The connection cannot be separated after engagement. Lengthwise and system groove required. The Lamello Zeta P2 biscuit joiner or CNC machine required for installation.

→ Lamello Tenso P-14

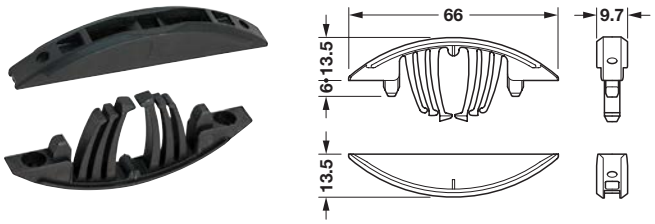

> Routing depth: 14 mm
> Tolerance specification: Lateral + 1 mm; Sliding tolerance: + 2 mm
> Material: Plastic, fiberglass reinforced

Version	Item No.	Packing
Starter Kit	267.91.151	80 pcs. connectors and pre-load clips, insertion tool
Connector	267.91.192	80 pcs.
Connector	267.91.152	300 pcs.
Connector	267.91.153	1000 pcs.

→ Lamello Tenso P-14 Pre-load Clips

> Material: Plastic, fiberglass reinforced

Item No.	Packing
267.91.159	300 pcs.
267.91.158	1000 pcs.

Supplied With
Installation tool

→ Lamello Tenso P-10

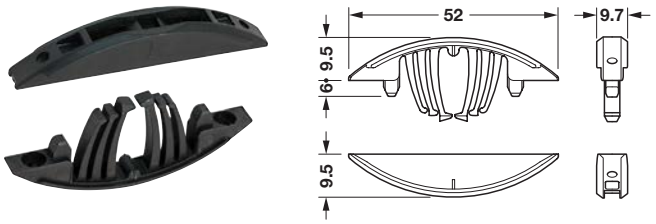

> Routing depth: 10 mm
> Tolerance specification: Lateral + 1 mm; Sliding tolerance: + 2 mm
> Pre-load clips and installation tool included in each box of connectors
> Material: Plastic, fiberglass reinforced

Item No.	Packing
267.91.220	80 pcs.
267.91.221	300 pcs.
267.91.222	1000 pcs.

→ Lamello Tenso Installation Tool

> Material: Plastic, fiberglass reinforced

	Item No.
	267.91.224

→ Lamello P-System Depth Adjuster

> Use for P8 depth slot on shared panel applications
> Material: Plastic, fiberglass reinforced

	Item No.
	267.91.223

Dimensional data not binding. Dimensions in mm, inches are approximate. We reserve the right to alter specifications without notice.

Detachable Connector

The three top reasons to use Clamex P-14 as a standard connector:
1. Nearly invisible, secure connections
2. Process advantages in production, transport and assembly
3. One connector for all connection applications and angles

> Quick and tool-less installation
> Connector can be removed and retightened as necessary
> The tensioning element makes high force transfer possible
> Laterally adjustable
> For corner, center panel and surface connections from 30°–180°

→ Lamello Clamex P-14 Flexus Connector

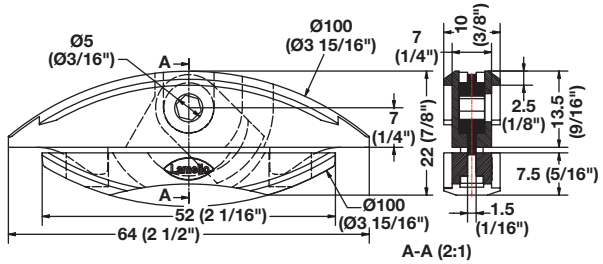

> Retractable positioning pins allow flexible assembly sequence
> Simple alignment and versatile assembly
> SW 4 hexagon drive
> For wood thickness: from 16 mm
> Material: Plastic; Bolt: Zinc Alloy

Item No.	Packing
267.91.302	80 pcs.
267.91.303	300 pcs.
267.91.304	1000 pcs.

Note
Join wood using Zeta P2 power tool: depth setting 14

→ Cover Caps

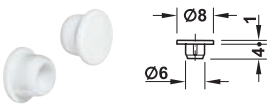

> For Ø6 mm (1/4") drill hole
> Material: Plastic

Color	Item No.
brown	045.00.110
dark brown	045.00.111
black	045.00.357
ivory	045.00.408
brown beige	045.00.409
blue gray	045.00.556
window gray	045.00.557
light gray	045.00.558
gray white	045.00.756
white	045.00.759

→ Lamello Clamex P Flexible Fitting Tool

> Material: Plastic, fiberglass reinforced

Item No.
001.26.607

→ Drilling Jig for Clamex P System

> For drilling hole for tightening screw, for 22.5°–108° angles
> Suitable for Clamex P-10, P-14, P-15 and Medius connectors
> Material: Plastic; Bolt: Zinc Alloy

Item No.
001.26.603

Supplied With
Drilling jig with twist drill bit

Dimensional data not binding. Dimensions in mm, inches are approximate. We reserve the right to alter specifications without notice.

Detachable Connector

The three top reasons to use Clamex P-14 as a standard connector:
1. Nearly invisible, secure connections
2. Process advantages in production, transport and assembly
3. One connector for all connection applications and angles

> Quick and tool-less installation
> Connector can be removed and retightened as necessary
> The tensioning element makes high force transfer possible
> Laterally adjustable
> For corner, center panel and surface connections from 30°–180°

P-System

Note
Lengthwise and system grooves required.
The Lamello Zeta P-2 biscuit joiner and HM biscuit joiner are required for installation. The profile groove can be milled with the HM biscuit joiner with a CNC machine for series manufacturing.

→ Lamello Clamex P-14 Connector

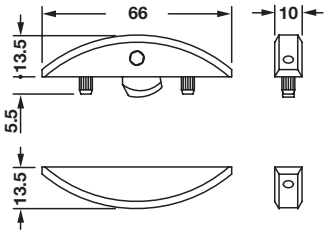

> SW 4 hexagon drive
> Lengthwise adjustment + 1.5 mm
> For wood thickness: from 16 mm
> Material: Plastic; Bolt: Zinc Alloy

Item No.	Packing
267.91.186	80 pcs.
267.91.136	300 pcs.
267.91.166	1000 pcs.

Note
Join wood using Zeta P2 power tool: depth setting 14

→ Cover Caps

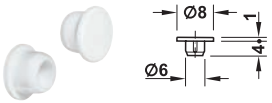

> For Ø6 mm (1/4") drill hole
> Material: Plastic

Color	Item No.
brown	045.00.110
dark brown	045.00.111
black	045.00.357
ivory	045.00.408
brown beige	045.00.409
blue gray	045.00.556
window gray	045.00.557
light gray	045.00.558
gray white	045.00.756
white	045.00.759

→ Lamello Clamex P-14/10 Medius Connector

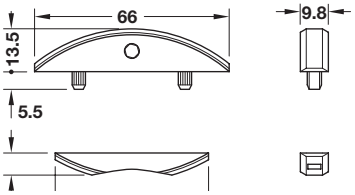

> For center panels
> SW 4 hexagon drive
> Lengthwise adjustment + 1 mm
> For wood thickness: from 12 mm
> Material: Plastic; Bolt: Zinc Alloy

Item No.	Packing
267.91.188	80 pcs.
267.91.138	300 pcs.

Note Join wood using Zeta P2 power tool: depth setting 14

→ Lamello Clamex P Flexible Fitting Tool

> Material: Plastic, fiberglass reinforced

	Item No.
	001.26.607

→ Drilling Jig for Clamex P System

> For drilling hole for tightening screw, for 22.5°–108° angles
> Suitable for Clamex P-10, P-14, P-15 and Medius connectors
> Material: Plastic; Bolt: Zinc Alloy

	Item No.
	001.26.603

Supplied With Twist drill bit

Dimensional data not binding. Dimensions in mm, inches are approximate. We reserve the right to alter specifications without notice.

Sliding Connector

> Pushes in effortlessly until tightening point is reached
> Shelves can be removed and retightened as necessary
> Quick, tool-less installation
> Concealed connection with evenly closed gaps

P-System

Note
Lengthwise and system grooves required. The Lamello Zeta P-2 biscuit joiner and HM biscuit joiner are required for installation. The profile groove can be milled with the HM biscuit joiner with a CNC machine for series manufacturing.

→ Lamello Divario P-18 Connector

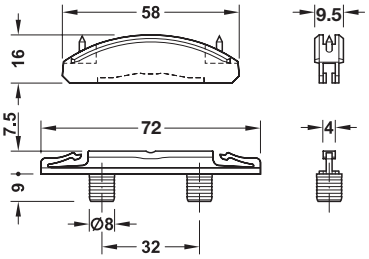

> Self-clamping, invisible fitting for slide insertion
> Material: Plastic, fiberglass reinforced

Version	Item No.	Packing
Starter Kit	267.91.128	80 pcs. connectors, marking jig and insertion tool
Connector	267.91.195	80 pcs.
Connector	267.91.155	300 pcs.
Connector	267.91.163	1000 pcs.

Note
1 pc. = 1 each male/female

→ Lamello Divario P-18 Installation Tool

> For knocking connector into workpiece

Item No.
001.26.700

→ Lamello Divario P-18 Marking Jig

> For manual, precise drilling of Divario bolt holes
> Includes drill bit with centering tip and depth gauge

Item No.
001.26.710

Installation

Mill lengthways groove for connector

Mill P-system groove

Push in connector

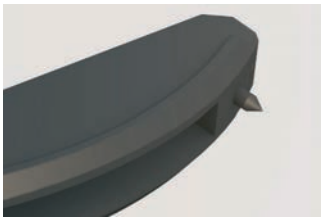

Knock in fixing pin using installation tool

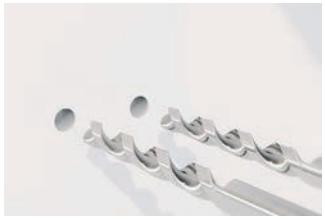

Drill Ø 8 mm hole for connecting bolt

Knock in connecting bolt

Insert shelf

Concealed, positive-fit connection

Dimensional data not binding. Dimensions in mm, inches are approximate. We reserve the right to alter specifications without notice.

P-System Starter Kits

P-System

→ Basic

	Item No.
	267.91.301

Supplied With
80 pcs. Clamex P-14
80 pcs. Tenso P-14 plus pre-loaded clips
60 pcs. Clamex P Medius
20 pcs. Bisco P-14
1 Sortainer® T-Loc box with divider

→ Professional

	Item No.
	267.91.300

Supplied With
120 pcs. Clamex P-14
30 pcs. Clamex P-14 Flexus
30 pcs. Clamex P-10
80 pcs. Tenso P-14 plus pre-loaded clips
30 pcs. Tenso P-10 plus pre-loaded clips
20 pcs. Bisco P-14
80 pcs. Divario P-18
1 Divario installation tool, drill bit with depth gauge, plastic marking jig
1 Clamex P installation tool
1 Sortainer® T-Loc with divider

Dimensional data not binding. Dimensions in mm, inches are approximate. We reserve the right to alter specifications without notice.

Divario Starter Kit

→ Divario

	Item No.
	002.18.051

Supplied With
Divario P-18 Installation Tool
Divario P-18 Marking Jig
Drill Bit with centering point and rotating depth collar
80 pcs. Divario P-18

Dimensional data not binding. Dimensions in mm, inches are approximate. We reserve the right to alter specifications without notice.

Lamello

→ Lamello Zeta P2 Biscuit Joiner

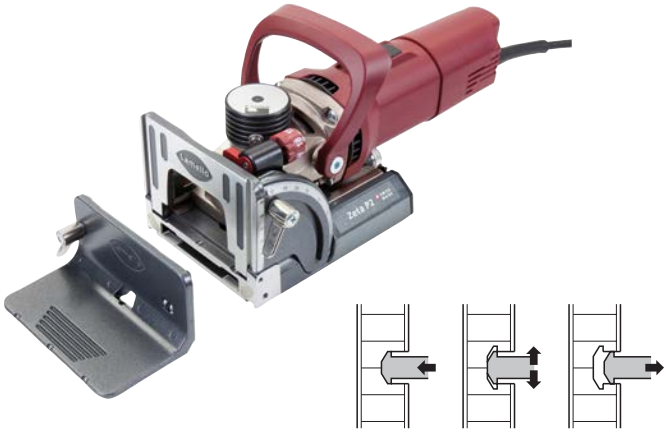

1 The cutter cuts into the workpiece until the pre-set depth is reached
2 The cutter moves minimally up and down cutting the profile groove
3 Removing the cutter

> For use in furniture and kitchen manufacturing, shop fixtures and booth construction
> Height-adjustable cutter is based on the tried-and-tested original
> With fixed, self-clamping and detachable connecting fittings, for the most complete and versatile wood joining system
> Top 21's Step Management System (SMS) uses a machined dial knob to micro-adjust the height of the cutter in 0.1 mm increments over a total range of 4 mm
> Multi-functional stop square, swiveling front stop with fixed pivot point and high-precision application surfaces
> Fixed or detachable connections with 10 different joining elements
> Power: 1,050 W; Voltage: 230 V or 120 V

Version	Item No.
With diamond blade	002.18.010
With HM blade	002.18.003

Supplied With
Case

→ P-System Cutter Blades

> For 7 mm profile grooves
> For use with Lamello Zeta P2 biscuit joiner

Description	Item No.
HM blade, 7 mm	002.18.009
Diamond blade, 7 mm	002.18.030

→ Lamello Classic X

> Base plate flush on both sides for efficient positioning
> Precision-machined guide and application surfaces
> Multi-functional stop square, swiveling front stop 0-90° with detents at 22.5°, 45°, 67.5°, 90°
> Slim, powerful motor
> Carbide tipped cutter
> Rotating depth adjuster with 6 standard depths; max. cutting depth: 20 mm
> Power: 750 W; Voltage: 230 V or 120 V

	Item No.
	002.18.040

Dimensional data not binding. Dimensions in mm, inches are approximate. We reserve the right to alter specifications without notice.

Lamello

→ Lamello Zeta P2 Cordless Biscuit Joiner

- > For use in furniture and kitchen manufacturing, shop fixtures and booth construction
- > Height-adjustable cutter is based on the tried-and-tested original
- > With fixed, self-clamping and detachable connecting fittings, for the most complete and versatile wood joining system
- > Top 21's Step Management System (SMS) uses a machined dial knob to micro-adjust the height of the cutter in 0.1 mm increments over a total range of 4 mm
- > Multi-functional stop square, swiveling front stop with fixed pivot point and high-precision application surfaces
- > Fixed or detachable connections with 10 different joining elements
- > With diamond blade
- > Power: 18V, LiHD 4.0 Ah battery

	Item No.
	002.18.065

Supplied With
Case
P-System drill jig
Spacers
Dust bag
Tool set
Stop square
2 Batteries
Charger

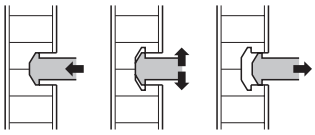

1 The cutter cuts into the workpiece until the pre-set depth is reached
2 The cutter moves minimally up and down cutting the profile groove
3 Removing the cutter

→ Lamello Classic X Cordless

- > Base plate flush on both sides for efficient positioning
- > Precision-machined guide and application surfaces
- > Multi-functional stop square, swiveling front stop 0-90° with detents at 22.5°, 45°, 67.5°, 90°
- > Slim, powerful motor
- > Carbide tipped cutter
- > Rotating depth adjuster with 6 standard depths; max. cutting depth: 20 mm
- > With diamond blade
- > Power: 18V, LiHD 4.0 Ah battery

	Item No.
	002.18.063

Supplied With
Case
Spacers
Dust bag
Tool set
Stop square
2 Batteries
Charger

→ Replacement Batteries and Charger

Description	Item No.
Battery charger ASC 55	002.18.033
Battery pack 18V, LiHD 4.0 Ah	002.18.034
Battery pack 18V, LiHD 5.5 Ah	002.18.035

Dimensional data not binding. Dimensions in mm, inches are approximate. We reserve the right to alter specifications without notice.

This page is left blank intentionally.

Dimensional data not binding. Dimensions in mm, inches are approximate. We reserve the right to alter specifications without notice.

Lamello

→ Lamello Top 21 with Case

> Premium biscuit joiner, for use in furniture and kitchen manufacturing, shop fixtures and booth construction
> Height-adjustable cutter is based on the tried-and-tested original
> With fixed, self-clamping and detachable connecting fittings, for the most complete and versatile wood joining system
> Top 21's Step Management System (SMS) uses a machined dial knob to micro-adjust the height of the cutter in 0.1 mm increments over a total range of 4 mm
> Multi-functional stop square, swiveling front stop with fixed pivot point and high-precision application surfaces
> Fixed or detachable connections with 10 different joining elements
> Power: 1,050 W; Voltage: 230 V or 120 V

	Item No.
	002.18.050

Supplied With
Systainer case

→ Carbide Cutter/Scorer for Wood Biscuits

	Item No.
	006.89.029

→ T-Groove Diamond Cutter for Clamex P

> For CNC
> 100.4 x 7 x 30 mm bore

	Item No.
	002.18.012

Note
Requires CNC Cutter Arbor.

Dimensional data not binding. Dimensions in mm, inches are approximate. We reserve the right to alter specifications without notice.

Biscuits/Panel Expansion Inserts

→ Wood Biscuits

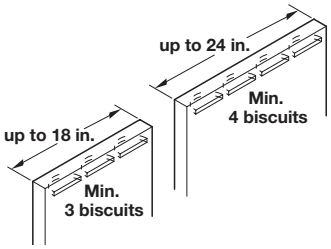

> Die-cut from beechwood blanks, these biscuit assemblers (or wood joining plates) are compressed for strength and cross-hatched to improve glue bonding
> When used with any water-based glue, the biscuit swells within the joint providing excellent holding power
> For all types of butt or miter joints

H x L	Groove depth	Groove thickness	Size	Item No.
15 x 47	8	4	0	267.90.000
19 x 53	10	4	10	267.90.010
23 x 56	12	4	20	267.90.020

→ Lamello K20 Clamping Element

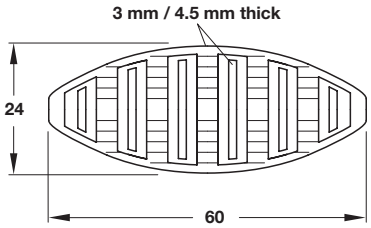

> Assembly aid for work pieces that are difficult to clamp
> Plastic element with lateral clamping ridges for anchoring in the groove
> Used in combination with wood biscuits
> Can be installed with any biscuit joiner
> Installs with cutter Ø100 × 4 × 22 mm (standard cutter)
> Material: Plastic

Color	Item No.
black	267.91.020

→ Lamello Alignment Bisco P-14

> Joins and clamps during insertion for perfectly closed joints
> A part of the Clamex P system, for alignment of grooves on separation walls, table tops or kitchen counters
> Used for the flush alignment of panels, as well as for gluing, stiffening and increasing shear strength
> Ideal for dry-fitting connections prior to final assembly with Clamex or Tenso
> Fits P-System grooves without changing the cutter
> L x W x H: 65 x 27 x 7 mm
> Material: Plastic, fiberglass reinforced

Item No.
267.91.183

Supplied With 80 pcs.

Note Installs with Zeta P-2.

→ Lamello Wood Biscuits

> Recessed, embossed surfaces for optimal glue distribution and strong connections
> Rounded, smooth edges for easy insertion into groove
> Diagonal fiber orientation for excellent strength
> Premium Swiss-made product

H x L	Groove depth	Groove thickness	Size	Item No.
15 x 47	8	4	0	267.91.400
19 x 53	10	4	10	267.91.410
23 x 56	12	4	20	267.90.112

→ Panel Expansion Inserts

> For interior doors
> Offers maximum expansion while centering the panels with minimal pressure on the door joint
> Oversized foam material fits tightly in the groove
> Installs easily in comparison to hard rubber balls
> Contains no oil or silicone to harm finishes
> W x D x L: 7 x 7 x 19 mm
> Material: Rubber

Color	Item No.	Bulk
black	037.90.000	037.90.010

Note Bulk quantity supplied with 10,000 pcs.

Dimensional data not binding. Dimensions in mm, inches are approximate. We reserve the right to alter specifications without notice.

Dowels

→ Wood Dowels (Fluted)

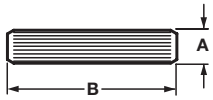

> Fluted dowels allow the glue to distribute evenly over the entire surface
> Suitable for non-glued applications in combination with mechanical fasteners
> Application:
– Glued case connections
– Non-glued connections in combination with mechanical fastener
> Material: Kiln-dried hardwood

mm				
A x B	**Item No.**	**Packing**	**Item No.**	**Bulk**
5 x 30	267.83.030	1,000	267.83.032	52,000
5 x 35	267.83.035	1,000	267.83.036	46,000
5 x 40	267.83.040	1,000	267.83.042	30,000
6 x 25	267.83.125	1,000	267.83.127	44,000
6 x 30	267.83.130	1,000	267.83.132	35,400
8 x 25	267.83.225	1,000	267.83.227	23,000
8 x 30	267.83.230	1,000	267.83.233	19,200
8 x 32	267.83.232	1,000	267.83.234	17,800
8 x 35	267.83.235	1,000	267.83.237	16,400
8 x 38	267.83.238	1,000	267.83.239	15,000
8 x 40	267.83.240	1,000	267.83.242	14,200
8 x 50	267.83.250	1,000	267.83.252	12,000
10 x 30	267.83.330	1,000	267.83.332	25,000
10 x 50	-	-	267.83.350	13,000

Inch				
A x B	**Item No.**	**Packing**	**Item No.**	**Bulk**
1/4" x 1"	267.80.102	1,000	267.80.103	38,700
1/4" x 1 1/4"	267.80.105	1,000	267.80.106	29,600
1/4" x 1 1/2"	-	-	267.80.107	24,000
5/16" x 1"	-	-	267.80.202	10,000
5/16" x 1 1/4"	267.80.205	1,000	267.80.206	17,800
5/16" x 1 1/2"	267.80.207	1,000	267.80.208	15,000
3/8" x 1 1/2"	267.80.307	1,000	267.80.308	13,000
3/8" x 2"	267.80.312	1,000	267.80.313	13,000
1/2" x 3"	267.80.719	1,000	267.80.720	5,000

→ Pre-Glued Multi-Grooved (Fluted) Wood Dowel

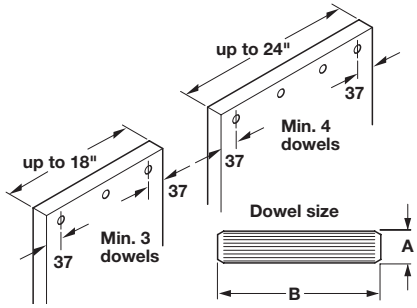

> 100% glue coverage creates superior holding strength
> Eliminates clean up time on your product during and after assembly
> Material: Kiln-dried hardwood

mm				
A x B	**Item No.**	**Packing**	**Item No.**	**Bulk**
6 x 25	267.84.125	1,000	267.84.126	44,000
6 x 30	267.84.130	1,000	267.84.131	35,000
8 x 25	267.84.225	1,000	267.84.226	23,000
8 x 30	267.84.230	1,000	267.84.231	20,000
8 x 32	267.84.232	1,000	267.84.233	20,000
8 x 35	267.84.235	1,000	267.84.236	20,000
8 x 38	267.84.238	1,000	267.84.239	15,000

Inch/mm		
A x B	**Item No.**	**Bulk**
5/16" x 35	267.84.237	20,000

Note
How to use a Pre-glued dowel:
> Simply replace your glue with water
> Fill approximately 1/3 of the hole with water and insert dowel
> A spray mist bottle can also be used by holding the nozzle next to the hole, and spraying 1 or 2 times before you insert the dowel

→ EXACT Dowel

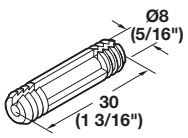

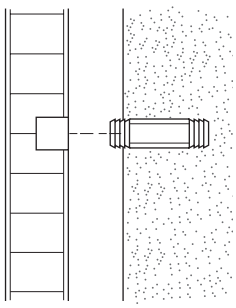

> For solid and detachable connections
> Made of high grade, high-impact plastic for invisible and corrosion proof connections
> The tooth-like grooves of the dowels guarantee a tight fit even without glue
> EXACT dowels save labor on ceiling, door and wall paneling as they can also be driven into brick and concrete
> Material: Plastic

Color	Item No.
white	267.70.700

Dimensional data not binding. Dimensions in mm, inches are approximate. We reserve the right to alter specifications without notice.

Connecting Brackets

→ Universal Brackets

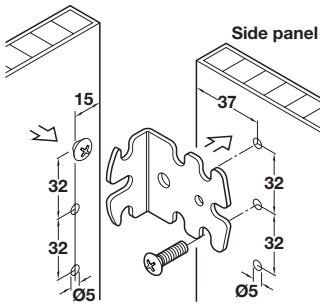

VARIANTA ⌀5

SYSTEM VARIANTA 32

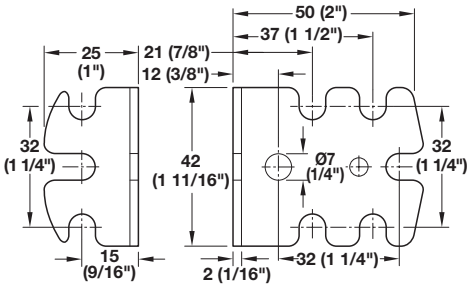

> For 32 mm series holes
> Material: Steel

Finish	Item No.
galvanized	264.25.909
white epoxy-coated	264.25.703

Varianta screws page 12.16

Dimensional data not binding. Dimensions in mm, inches are approximate. We reserve the right to alter specifications without notice.

Connecting Brackets

→ Rear Panel Bracket

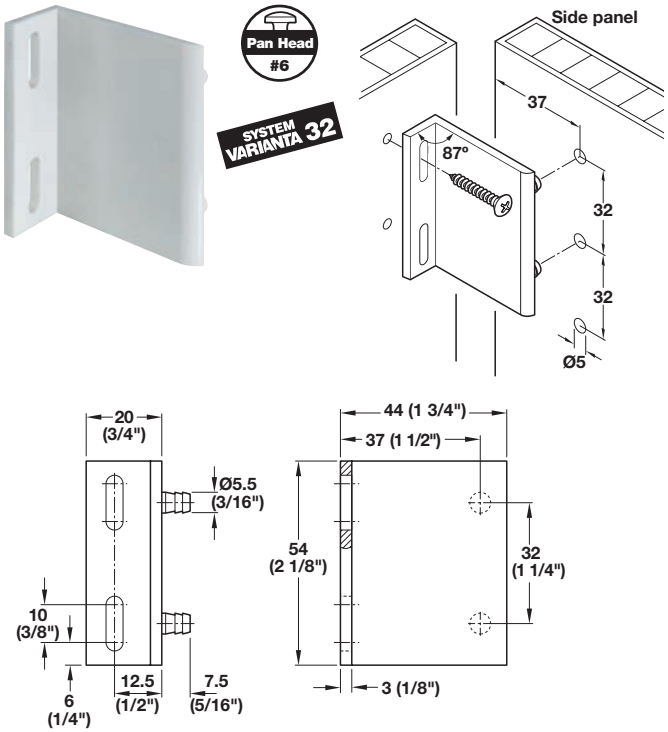

> Press-fit into Ø5 mm, 32 mm series holes
> Material: Plastic

Color	Item No.
white	260.12.706

Pan head screws pages 12.9-12.10

Dimensional data not binding. Dimensions in mm, inches are approximate. We reserve the right to alter specifications without notice.

Connecting Brackets

→ Topfix Angle Bracket

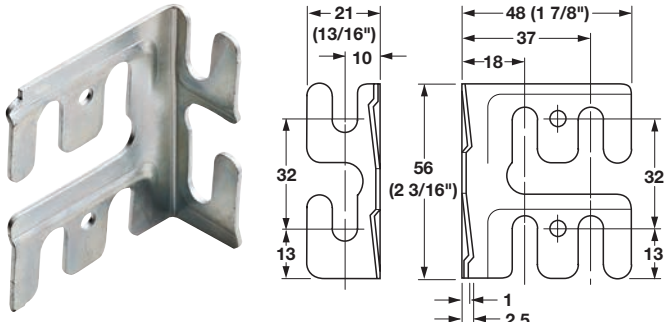

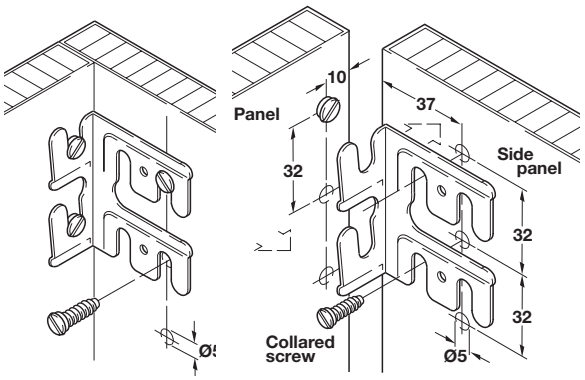

> Left and right hand
> Material: Steel, galvanized

Item No.
264.27.912

→ Special Collared Screw

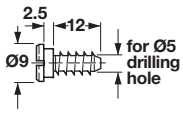

> For use with Topfix angle bracket
> With slotted drive
> Material: Steel, galvanized

Item No.
264.27.985

→ General Purpose Bracket

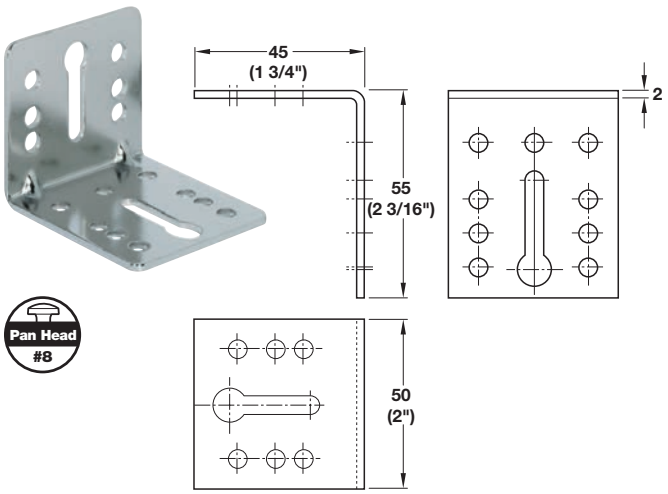

> With key hole slot
> Material: Steel

Finish	Item No.
nickel-plated	558.12.943

Pan head screws pages 12.9-12.10

Dimensional data not binding. Dimensions in mm, inches are approximate. We reserve the right to alter specifications without notice.

Connecting Brackets

→ Bracket

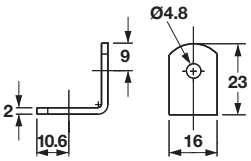

> 14 gauge
> Material: Steel

Finish	Item No.
unfinished	260.35.022
black oxide	260.35.322
zinc-plated	260.35.922

→ Bracket

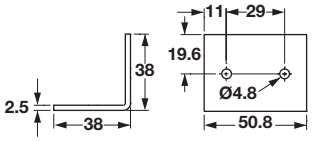

> 13 gauge
> Material: Steel

Finish	Item No.
unfinished	260.25.045
black oxide	260.25.345
zinc-plated	260.25.945

→ Bracket

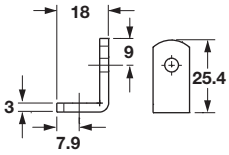

> 11 gauge
> Material: Steel

Finish	Item No.
unfinished	260.35.002
black oxide	260.35.302

→ Bracket

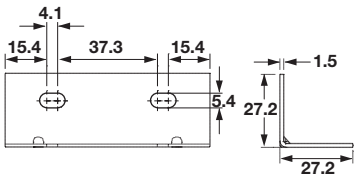

> Material: Steel

Finish	Item No.
unfinished	260.25.027
black oxide	260.25.327
zinc-plated	260.25.927

→ Bracket

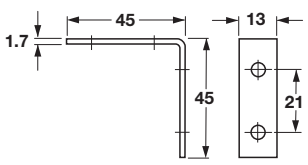

> 16 gauge
> Material: Steel

Finish	Item No.
unfinished	260.33.004
zinc-plated	260.33.904

Pan head screws pages 12.9-12.10

Dimensional data not binding. Dimensions in mm, inches are approximate. We reserve the right to alter specifications without notice.

Connecting Brackets

→ Table Plate

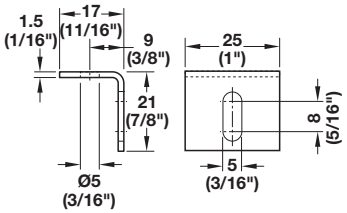

Pan Head #8

> With screw hole and slot
> Material: Steel

Finish	Item No.
nickel-plated	260.25.703

→ Table Plate

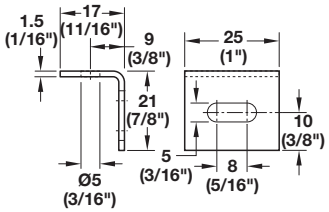

Pan Head #8

> With screw hole and slot
> Material: Steel

Finish	Item No.
nickel-plated	260.26.700

→ Corner Braces

Flat Head #8

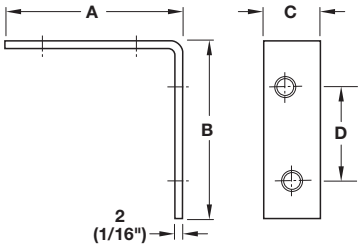

> With screw holes
> Material: Steel; Finish: blue galvanized

A x B	C	D	Item No.
25 x 25	15	10	260.28.902
40 x 40	15	20	260.28.904
50 x 50	15	25	260.28.905
60 x 60	18	32	260.28.906
80 x 80	18	46	260.28.908

→ Angle Bracket

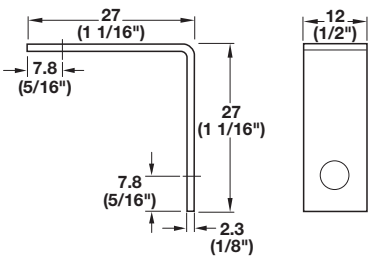

Flat Head #6

> Material: Steel, epoxy-coated

Finish	Item No.
white	260.35.740
brown	260.35.140

Flat head screws	pages 12.7-12.8, 12.10, 12.13
Pan head screws	pages 12.9-12.10

Dimensional data not binding. Dimensions in mm, inches are approximate. We reserve the right to alter specifications without notice.

Connecting Brackets

→ Bracket

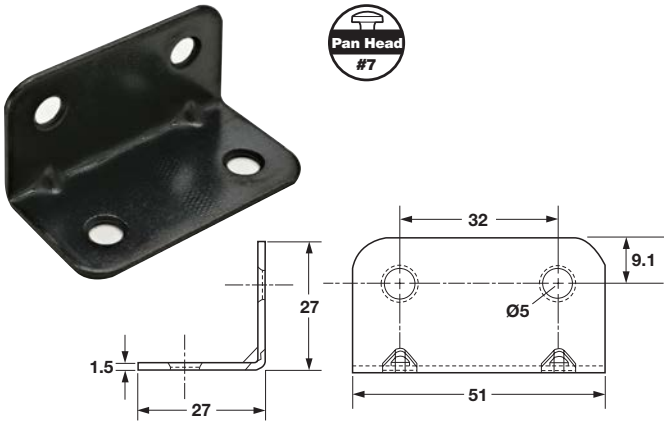

> Material: Steel

Finish	Item No.
unfinished	260.46.010
black oxide	260.46.310
zinc-plated	260.46.910

→ Bracket

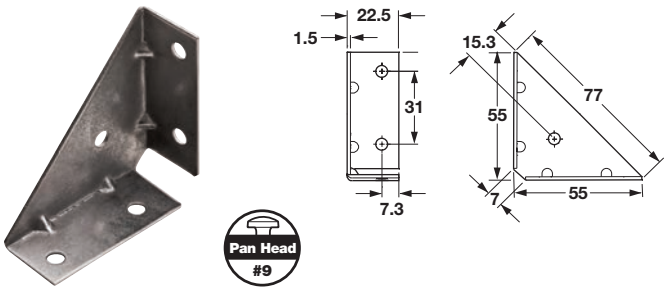

> 16 gauge
> Material: Steel

Finish	Item No.
unfinished	260.34.005
black oxide	260.34.305
zinc-plated	260.34.905

→ Bracket

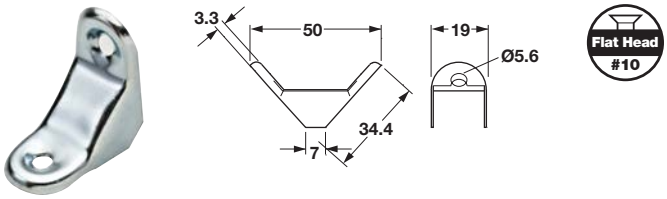

> 22 gauge
> Material: Steel

Finish	Item No.
unfinished	260.43.003
black oxide	260.43.303
zinc-plated	260.43.903

Flat head screws	pages 12.7-12.8, 12.10, 12.13
Pan head screws	pages 12.9-12.10

Dimensional data not binding. Dimensions in mm, inches are approximate. We reserve the right to alter specifications without notice.

Connecting Brackets

> Small and inconspicuous
> Allows easy screw mounting of various furniture components including back panels and rails
> Boring is not required due to surface mounting

→ Angle Bracket

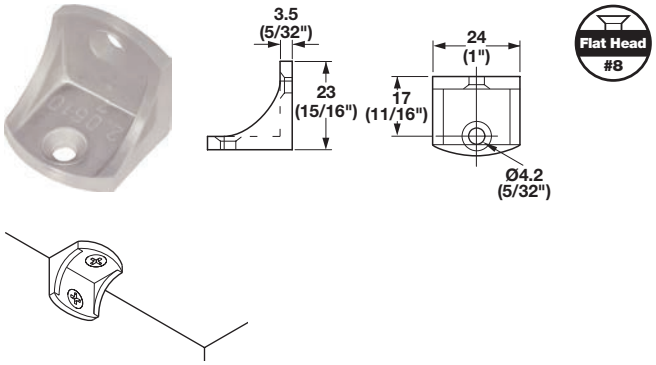

> For furniture assembly
> Material: Plastic

Color	Item No.
white	260.24.715
brown	260.24.117
transparent	260.24.415

→ Angle Bracket

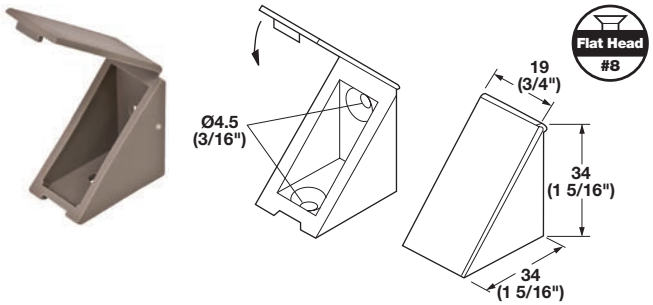

> With attached cover cap
> Material: Plastic

Color	Item No.
white	260.24.740
almond	260.24.440
brown	260.24.140
black	260.24.340
bronze	260.24.141
gray	260.24.541
ivory	260.24.741

→ Angle Bracket

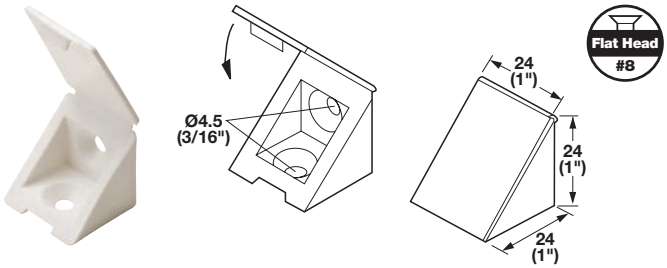

> With attached cover cap
> Material: Plastic

Color	Item No.
white	260.24.720

→ Corner Bracket

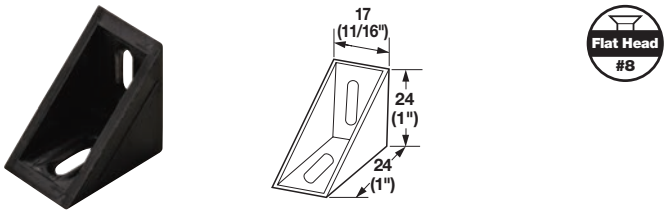

> Material: Plastic

Color	Item No.
white	260.47.700
black	260.47.300

→ Corner Bracket

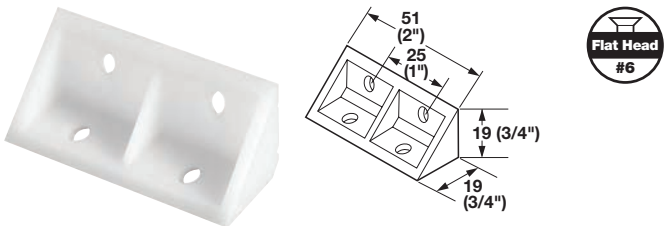

> Material: Plastic

Color	Item No.
white	260.48.700

Flat head screws pages 12.7-12.8, 12.10, 12.13

Dimensional data not binding. Dimensions in mm, inches are approximate. We reserve the right to alter specifications without notice.

Connecting Plates

→ Plate

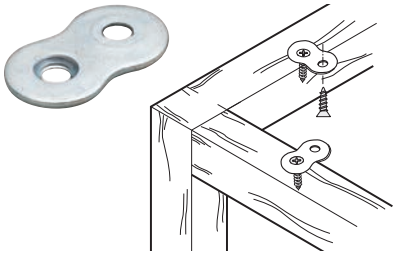

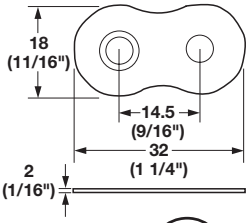

Flat Head #9

Can be used to connect table tops onto frames and panels.

> Material: Steel

Finish	Item No.
zinc-plated	260.22.930

→ Izzy Skirt Washer

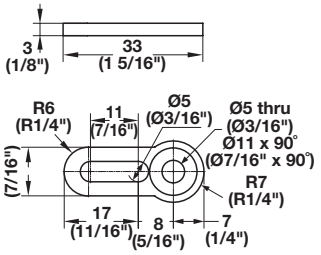

Flat Head #9

> Used to attach table tops and drawer fronts
> Slotted design offers adjustability
> Material: Steel

Finish	Item No.
zinc-plated	260.26.910

→ Plate

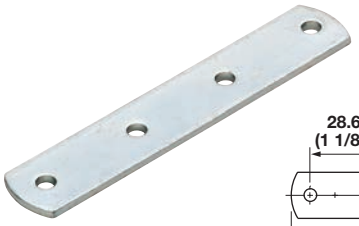

Pan Head #10

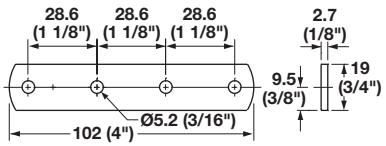

> 12 gauge
> Material: Steel

Finish	Item No.
zinc-plated	260.22.910

→ Plate

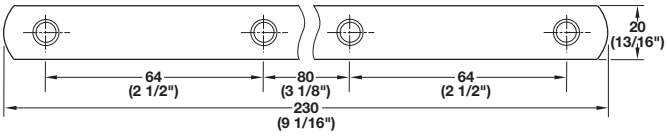

Flat Head #6

> 11 gauge
> Material: Steel

Finish	Item No.
zinc-plated	260.22.900

→ Bracket

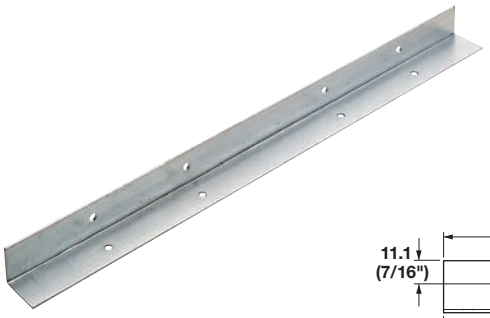

Pan Head #9

> 16 gauge
> Material: Steel

Finish	Item No.
black oxide	260.39.340
zinc-plated	260.39.940

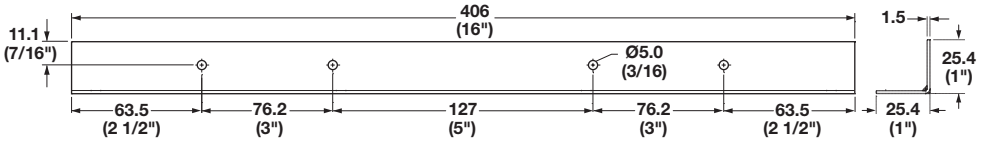

Flat head screws	pages 12.7-12.8, 12.10, 12.13
Pan head screws	pages 12.9-12.10

Dimensional data not binding. Dimensions in mm, inches are approximate. We reserve the right to alter specifications without notice.

Connecting Plates and Pins

→ Mending Plate

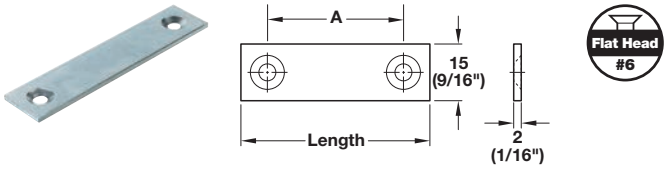

> Material: Steel, galvanized

Length	A	Item No.
50	35	260.21.509
70	55	260.21.705

→ Door Panel Connector

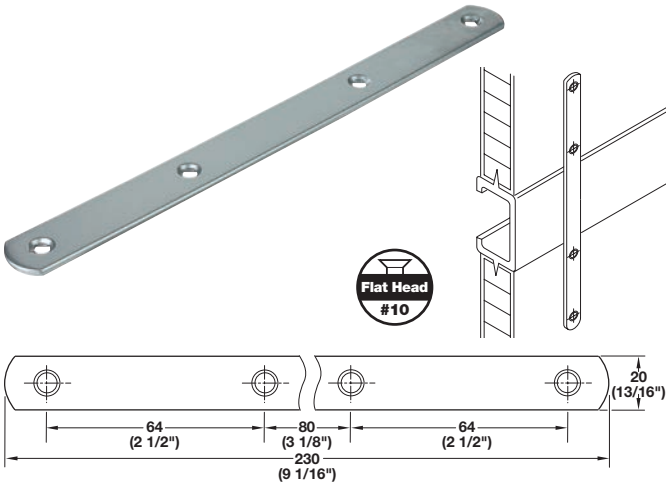

> Uniform front view
> Use in base cabinets without drawer door, in stacked panel installations
> Screw mounted
> Thickness: 3 mm
> Material: Steel, powder-coated

Finish	Item No.
white	260.22.700

→ Mending Plate

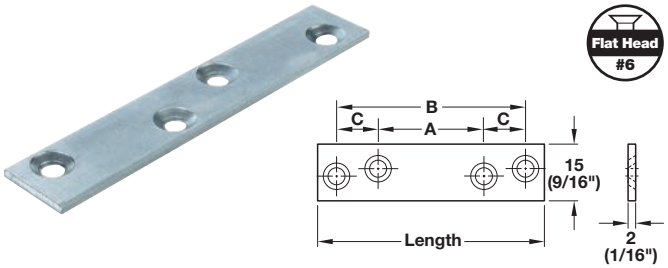

> Material: Steel, galvanized

Length	A	B	C	Item No.
60	27	49	11	260.20.011
80	17	64	24	260.20.020
100	27	85	29	260.20.039

→ Connecting Pin

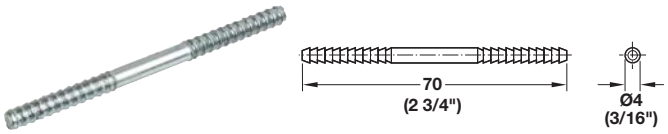

> Drilled-in
> Material: Steel, chromatized

	Item No.
	267.23.900

→ Spacer

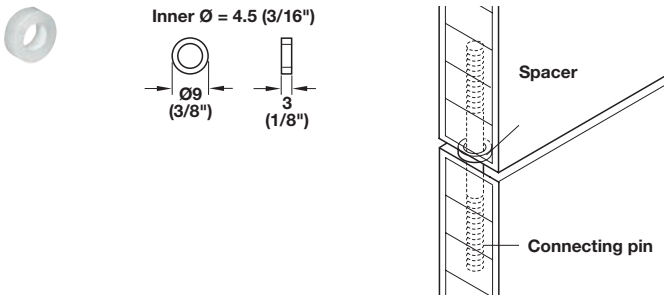

> Achieves desired gap between door and stacked panel
> Material: Plastic, opaque

	Item No.
	267.23.093

Flat head screws pages 12.7-12.8, 12.10, 12.13

Dimensional data not binding. Dimensions in mm, inches are approximate. We reserve the right to alter specifications without notice.

This page is left blank intentionally.

Dimensional data not binding. Dimensions in mm, inches are approximate. We reserve the right to alter specifications without notice.

Z Clips

> An easy and economical solution for installation of wall panels:
  - Mount clips on the back side of the wall panel
  - Mount rails horizontally on wall surface and fasten at stud locations
  - Hang panel on wall rail
> Interlocking profile of clips and rails provide a secure connection
> Mounted fittings are concealed
> Offered in either 3/8" or 5/8" lift-off profile
> Mount with #8 pan head screws

→ Z Clips

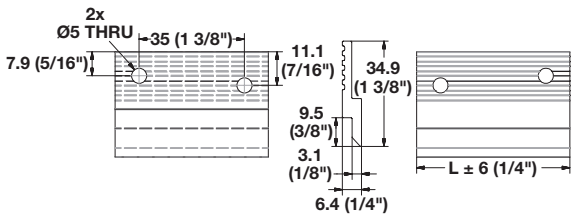

> 3/8" Lift-Off
> Screw mounted
> W x H: 35 x 6 mm (1 3/8" x 1/4")
> Material: Aluminum, mill finish

Length	Without holes	With holes	With holes 8" on center
50 (2")	–	290.11.060	–
1828 (72")	290.11.050	–	290.11.054
3657 (144")	290.11.051	–	290.11.055

→ Z Clips

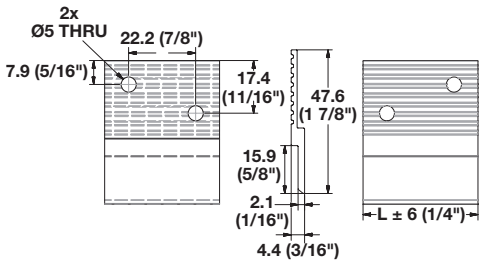

> 5/8" Lift-Off
> Screw mounted
> W x H: 35 x 4 mm (1 7/8" x .175")
> Material: Aluminum, mill finish

Length	Without holes	With holes	With holes 8" on center
38 (1 1/2")	–	290.11.061	–
1828 (72")	290.11.052	–	290.11.056
3657 (144")	290.11.053	–	290.11.057

Pan head screws pages 12.9-12.10

Dimensional data not binding. Dimensions in mm, inches are approximate. We reserve the right to alter specifications without notice.

This page is left blank intentionally.

Dimensional data not binding. Dimensions in mm, inches are approximate. We reserve the right to alter specifications without notice.

Connecting Brackets

→ Toe Kick Bracket

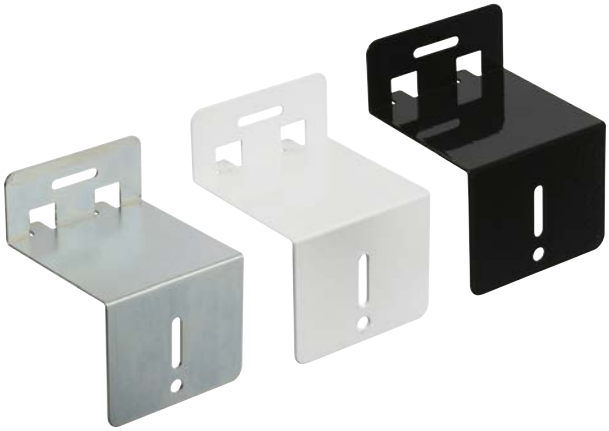

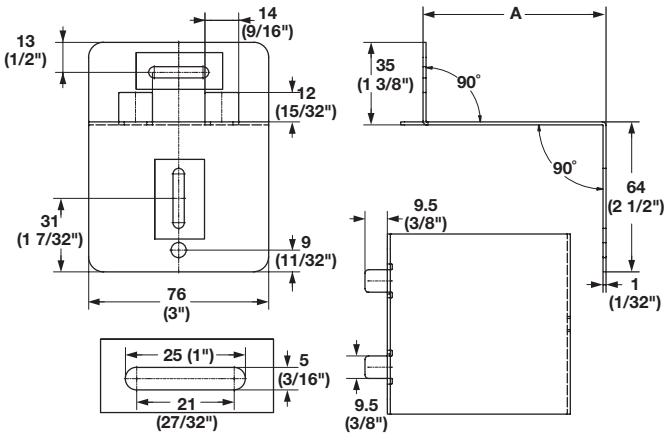

> Connects door to toe kick panel
> Designed for ADA cabinet applications
> Creates total accessibility of under counter space
> Allows for concealed storage of roll-away carts or equipment
> Slotted holes for adjustment
> Tabs for consistent alignment to bottom of door
> Material: 18 gauge Steel

A	Finish	Item No.	Packing
76 (3")	zinc-plated	260.25.050	10 sets
76 (3")	white	260.25.054	10 sets
76 (3")	black	260.25.058	10 sets
76 (3")	zinc-plated	260.25.052	25 sets
76 (3")	white	260.25.056	25 sets
76 (3")	black	260.25.060	25 sets
102 (4")	zinc-plated	260.25.051	10 sets
102 (4")	white	260.25.055	10 sets
102 (4")	black	260.25.059	10 sets

Supplied With
Mounting screws

Note
1 set = 4 brackets, 12 screws

Dimensional data not binding. Dimensions in mm, inches are approximate. We reserve the right to alter specifications without notice.

False Front Connector

> Secure, removable connection
> Allows for quick, easy access

→ Connector

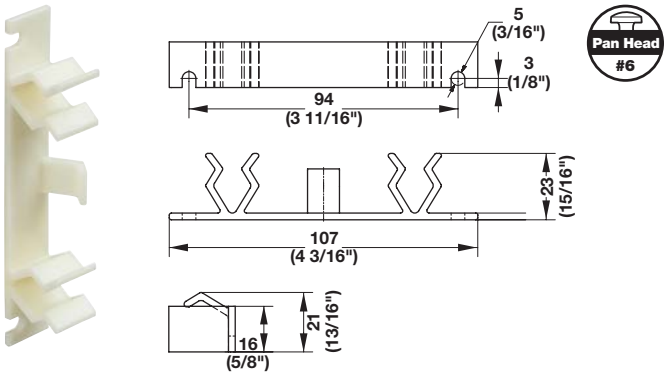

> Material: Plastic

Color	Item No.
white	422.59.025

→ Connector

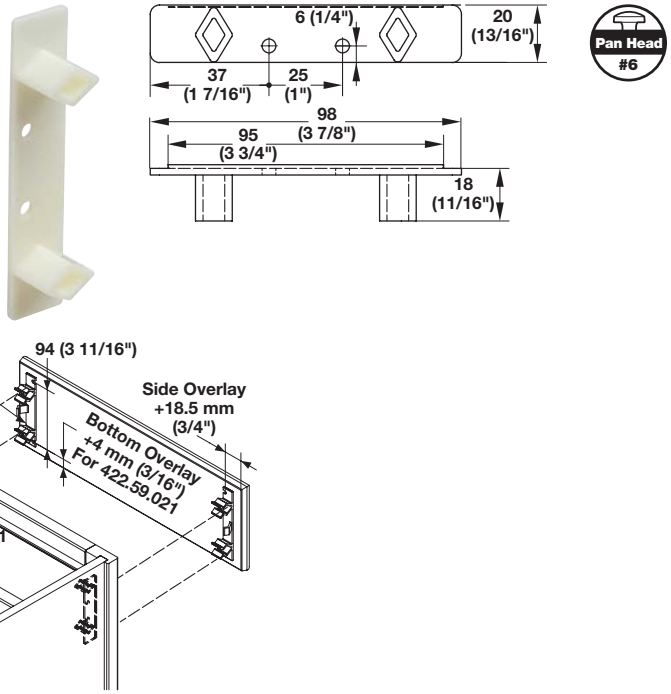

> Bottom overlay: + 4 mm
> Material: Plastic

Color	Item No.
white	422.59.021

→ Connector

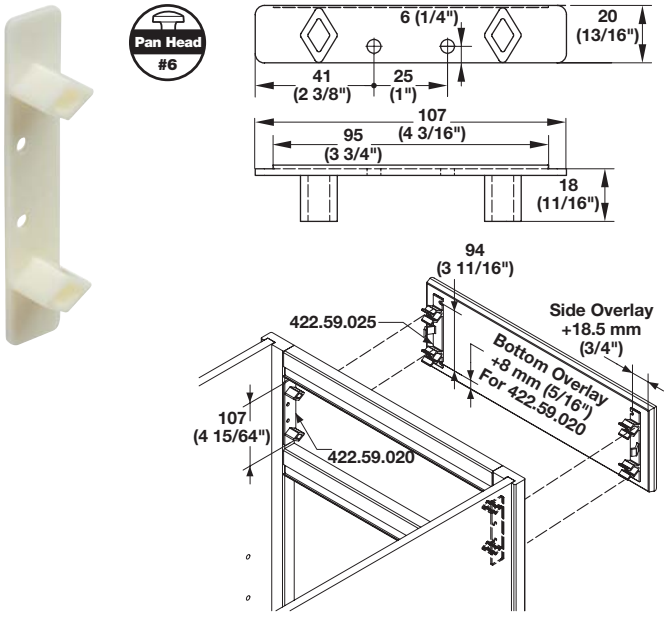

> Bottom overlay: + 8 mm
> Material: Plastic

Color	Item No.
white	422.59.020

Pan head screws pages 12.9-12.10

Dimensional data not binding. Dimensions in mm, inches are approximate. We reserve the right to alter specifications without notice.

False Front Connector

→ Connector

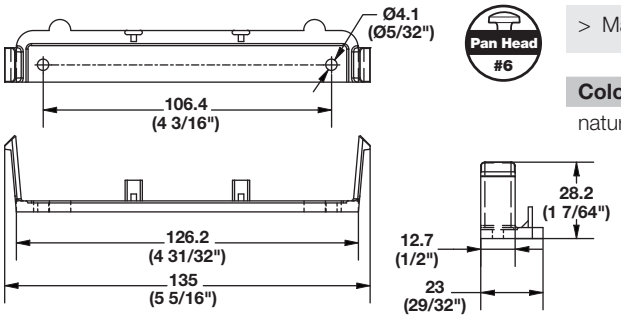

> Material: Plastic

Color	Item No.
natural	422.59.028

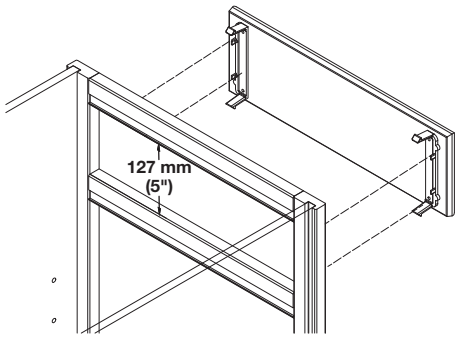

Corner Brackets

→ Brace

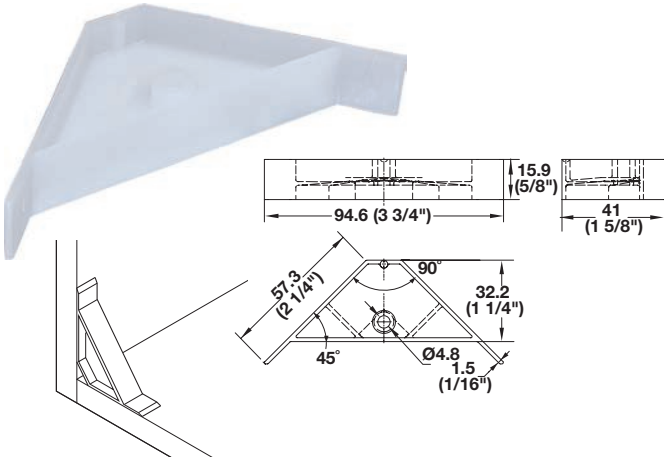

> Without reference tabs
> Provides stability to 90° corners
> Fasten with staples
> Boss hole for fixing countertops
> Material: Plastic/Polyethylene

Color	Item No.
white translucent	260.44.410

→ Brace

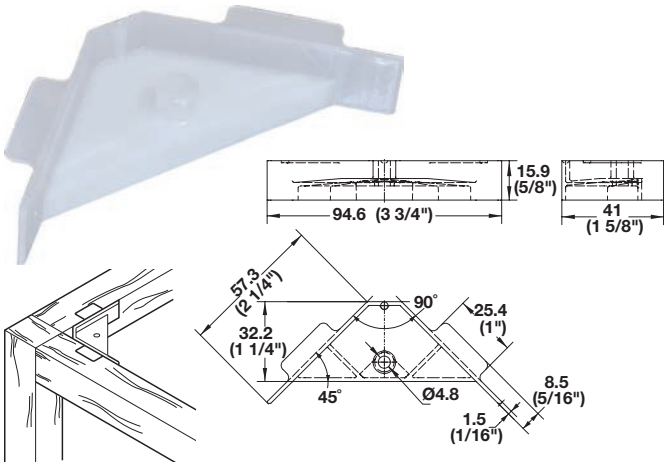

> With reference tabs on two sides
> Staples and glues on with one hole
> For any 90° corner, mainly used on kitchen base cabinets
> Material: Plastic/Polyethylene

Color	Item No.
white translucent	260.44.411

Pan head screws pages 12.9-12.10

Dimensional data not binding. Dimensions in mm, inches are approximate. We reserve the right to alter specifications without notice.

Zipbolt

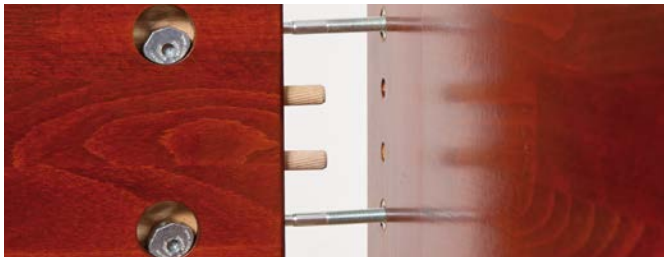

> Zipbolt connectors are ideal for use in: countertops, staircase assembly, furniture construction, millwork joinery and more
> Additional Zipbolts are available by request

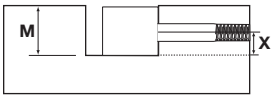

→ 13.500 ST Maxi – UT

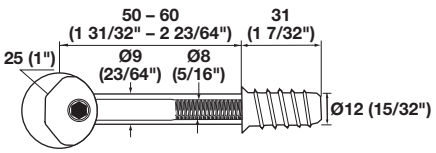

Note
A variation of bore size of 12.5–13 mm for insert screw may be required for hardwoods or when drilling into end grain.

> (X) Shaft center = 10 mm (25/64")
> (M) = Minimum bore depth: 20 mm (51/64")
> Material: Steel; Housing: Zinc

	Item No.
	262.96.873

Note
Requires 5 mm hex bit.

→ 10.500 Draw Bolt – UT

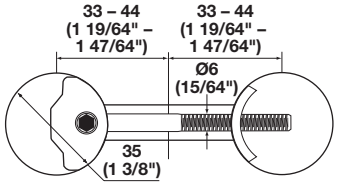

> (X) Shaft center = 10 mm (25/64")
> (M) = Minimum bore depth: 20 mm (51/64")
> Material: Steel; Housing: Zinc

	Item No.
	262.96.844

Note
Requires 5 mm hex bit.

→ 10.600 Draw Bolt – UT

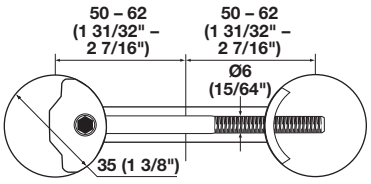

> (X) Shaft center = 10 mm (25/64")
> (M) = Minimum bore depth: 20 mm (51/64")
> Material: Steel; Housing: Zinc

	Item No.
	262.96.840

Note
Requires 5 mm hex bit.

Dimensional data not binding. Dimensions in mm, inches are approximate. We reserve the right to alter specifications without notice.

Zipbolt

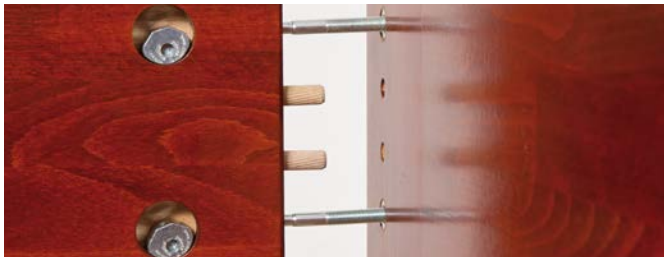

> Zipbolt connectors are ideal for use in: countertops, staircase assembly, furniture construction, millwork joinery and more
> Additional Zipbolts are available by request

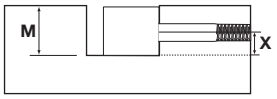

→ 10.700 Draw Bolt – UT

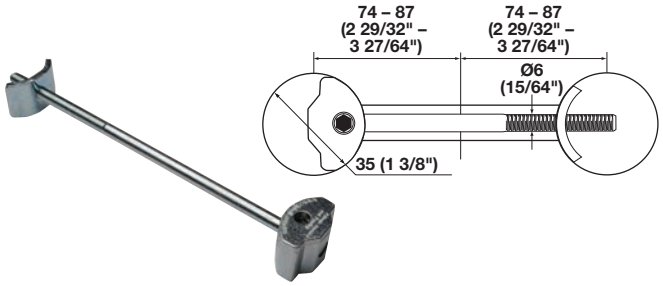

> (X) Shaft center = 10 mm (25/64")
> (M) = Minimum bore depth: 20 mm (51/64")
> Material: Steel; Housing: Zinc

Item No.
262.96.841

Note
Requires 5 mm hex bit.

→ 11.700 Mini Miter – UT

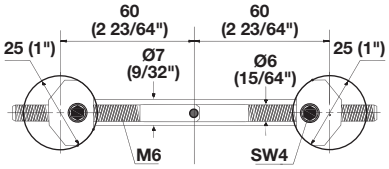

> (X) Shaft center = 5.5 mm (13/64")
> (M) = Minimum bore depth: 12.5 mm (31/64")
> Material: Steel; Housing: Zinc

Item No.
262.96.853

Note
Requires 5 mm hex bit.

→ Hex Bit

> Ø x L: 5 x 50 mm
> For use with ZIPBOLT – UT
> Material: Steel

Item No.
006.37.195

Dimensional data not binding. Dimensions in mm, inches are approximate. We reserve the right to alter specifications without notice.

Zipbolt

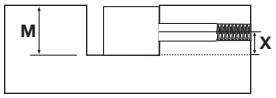

→ 10.900 Zipbolt Dogbone – UT

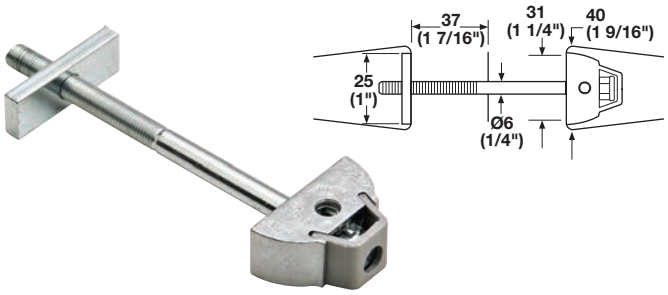

> (X) Shaft center = 5.5 mm (13/64")
> (M) = Minimum bore depth: 12.5 mm (31/64")
> Material: Steel; Clamps: Zinc/Plastic

	Item No.
	262.96.945

Note
Requires 4 mm hex driver.

→ 10.800 Zipbolt Mini – UT

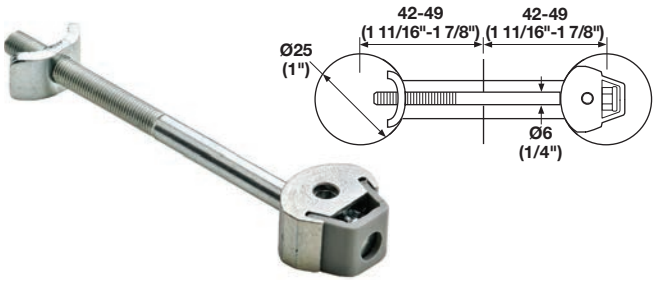

> (X) Shaft center = 5.5 mm (13/64")
> (M) = Minimum bore depth: 12.5 mm (31/64")
> Material: Steel; Clamps: Zinc/Plastic

	Item No.
	262.96.946

Note
Requires 4 mm hex driver.

→ Hex Key, 4 mm

> With hexagon socket head
> Material: Steel

Color	Item No.
black	008.28.044

→ Hex Socket Bit

> 4 mm
> Material: Hardened Tool Steel

	Item No.
	006.37.945

Supplied With
10 pcs.

Dimensional data not binding. Dimensions in mm, inches are approximate. We reserve the right to alter specifications without notice.

Worktop Connectors

→ Recessed Worktop Connector

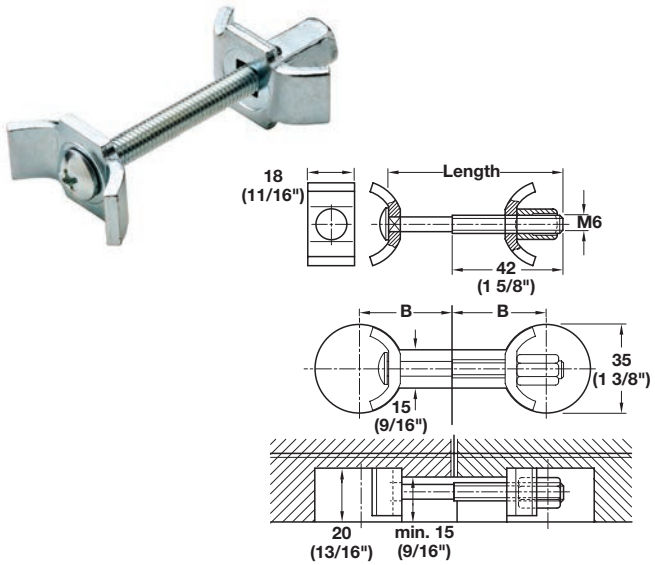

> Allow work surfaces to be connected rapidly and securely
> The semi-circular fastening elements are pressed against the recess walls as tension is applied
> Material: Steel; Finish: zinc-plated

Length	Drilling distance B	Item No.
65 (2 9/16")	from 32 to 41 (1 1/4" to 1 5/8")	262.96.211
150 (5 7/8")	from 75 to 84 (2 15/16" to 3 5/16")	262.96.220

→ Recessed Worktop Connector

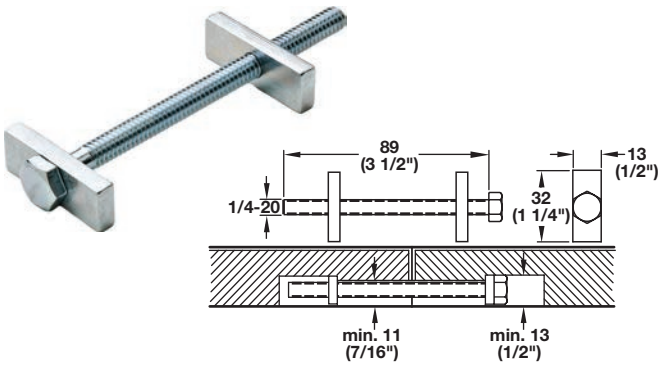

> Easily installed and quickly assembled for material from 16 mm (5/8")
> Provides even pressure between the surface joint pieces without glue
> The joint can be disassembled if necessary
> Length: 89 mm (3 1/2")
> Material: Steel

Finish	Item No.
zinc-plated	262.93.952

Dimensional data not binding. Dimensions in mm, inches are approximate. We reserve the right to alter specifications without notice.

QUICK Worktop Connector

> For joining two panel surfaces together
> Two-part assembly includes bolt with tightening mechanism, mating round cap
> Minimum material thickness: 25 mm (1")
> Drilling depth: 21 mm (13/16")

→ QUICK Ø30 Bolt

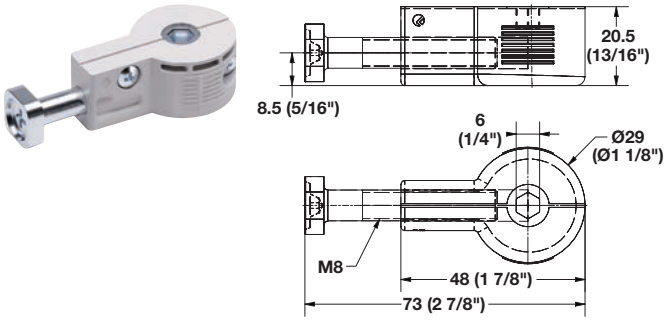

> Drilling distance: 26–38 mm
> Material: Zinc/Steel/Plastic

Item No.
262.96.250

→ QUICK Ø35 Bolt

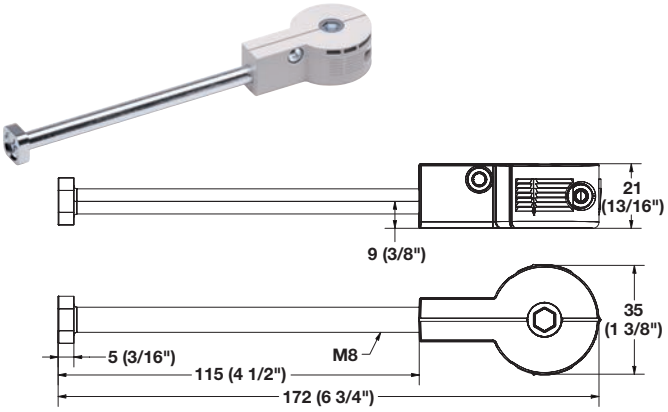

> Drilling distance: 75–81 mm
> Material: Zinc/Steel/Plastic

Item No.
262.96.231

→ QUICK Ø30 Cap

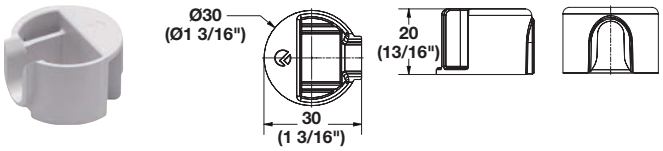

> Material: Plastic

Item No.
262.96.238

→ QUICK Ø35 Cap

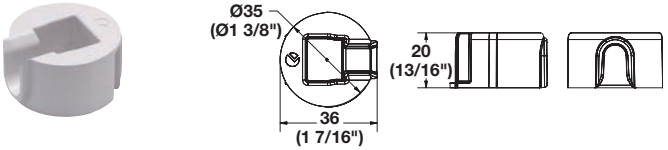

> Material: Plastic

Item No.
262.96.239

→ Hex Key, 6 mm

> Material: Steel

Finish	Item No.
zinc	008.28.260

Dimensional data not binding. Dimensions in mm, inches are approximate. We reserve the right to alter specifications without notice.

Worktop Connector

→ K Top Worktop Connector

- For joining two panel surfaces together
- Three-part assembly includes bolt with two mating round caps
- 3 mm Hex key required, order separately below
- Minimum material thickness: 10 mm
- Drilling depth: 7.5 mm
- Material: Zinc/Steel

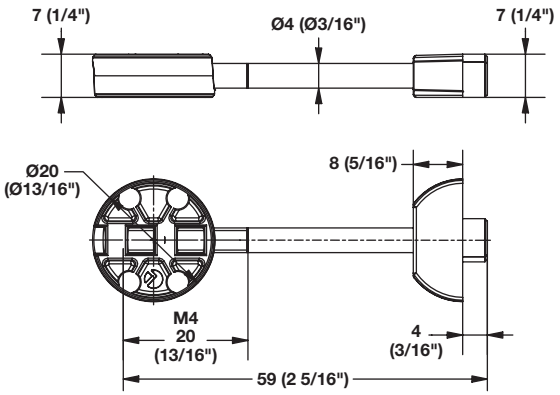

Finish	Item No.
zinc-plated	262.96.260

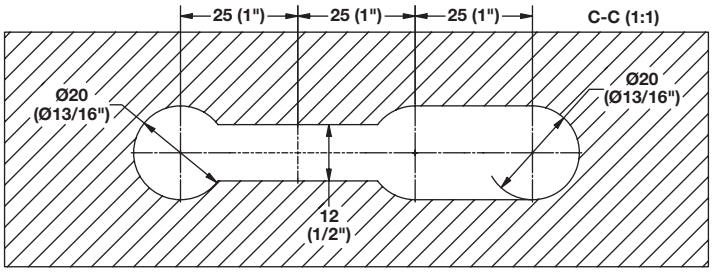

→ Hex Key, straight

- 3 mm
- Material: Steel

Finish	Item No.
black	008.28.035

Dimensional data not binding. Dimensions in mm, inches are approximate. We reserve the right to alter specifications without notice.

This page is left blank intentionally.

Dimensional data not binding. Dimensions in mm, inches are approximate. We reserve the right to alter specifications without notice.

Connectors

→ Flipbolt

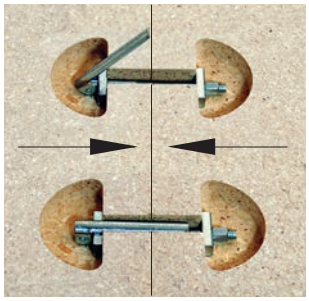

> No additional tools needed
> Fast and easy to use
> Material: Steel

Item No.
262.99.000

→ J-Hook

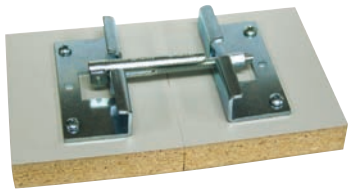

> Use to surface mount the flipbolt
> Material: Steel

Item No.
262.99.020

Supplied With
2 J-hooks

→ Flipbolt Template

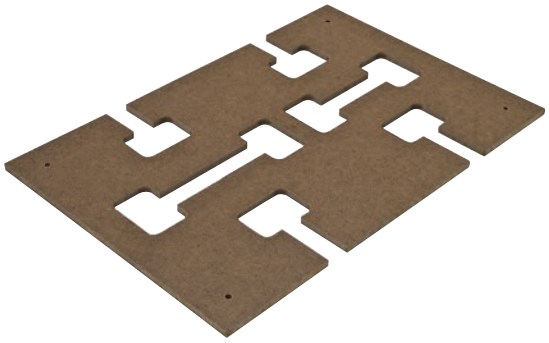

> Material: Hardboard

Item No.
262.99.001

Dimensional data not binding. Dimensions in mm, inches are approximate. We reserve the right to alter specifications without notice.

Häfele Keku System

Flat Head #8 | VARIANTA 3 | VARIANTA 5 | ixconnect

> For fastening panels to frames
> Temperature range: -100°C (-148°F) to +135°C (+275°F)
> Do not treat with chemical solutions or aggressive greases
> Do not adjust by hammering
> Not for suspended loads such as ceiling panels

→ AS Frame Component

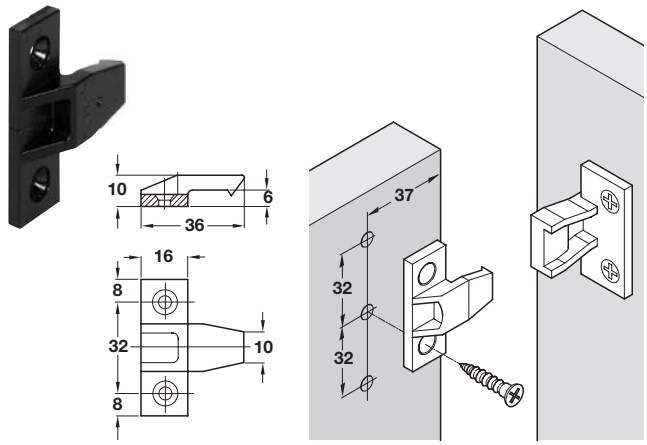

> Material: Plastic

Mounting	white	black
Wood screws	262.50.740	262.50.368
Varianta screws	-	262.50.377

→ ASR Frame Component

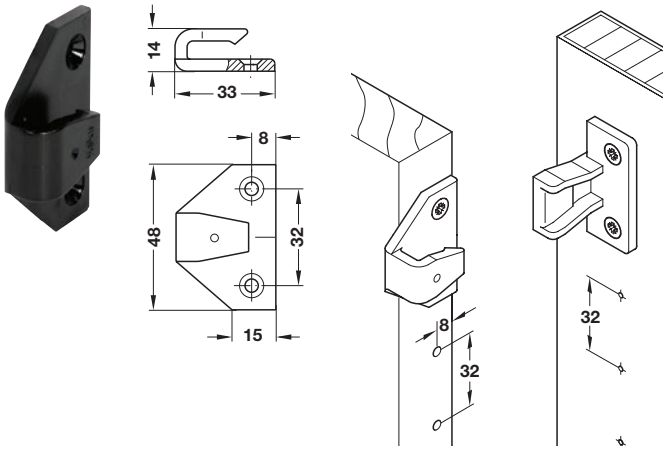

> Material: Plastic; Color: black

Mounting	Item No.
Wood screws	262.50.390
Varianta screws	262.50.391

→ AS Panel Component

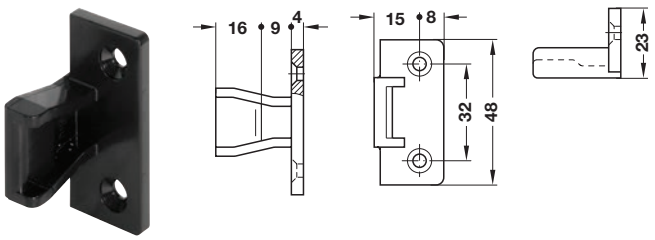

> Material: Plastic

Mounting	white	black
Wood screws	262.50.730	262.50.359
Varianta screws	-	262.50.358

Note
ASR and AS components must be ordered separately.

Varianta screws	page 12.16
Flat head screws	pages 12.7-12.8, 12.10, 12.13

Dimensional data not binding. Dimensions in mm, inches are approximate. We reserve the right to alter specifications without notice.

Häfele Keku System

ixconnect

> For fastening panels to frames
> Temperature range: -100°C (-148°F) to +135°C (+275°F)

→ EH Frame Component

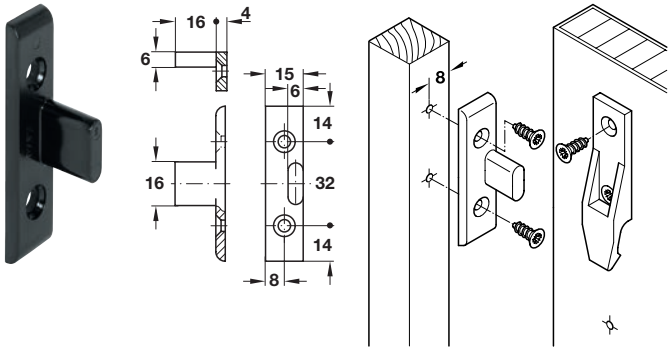

> Material: Plastic; Color: black

Mounting	Item No.
Wood screws	262.49.365
Varianta screws	262.49.366

Flat Head #8 · VARIANTA ⌀3 · VARIANTA ⌀5

Keku AD Double partition fitting

> Constructing cavity-type doors
> Double partitions on cabinet sides
> Connecting frame elements
> Linking elements
> Installing lightweight partitions
> Mounting wall elements (booth construction)

→ AD 15 Angled Component

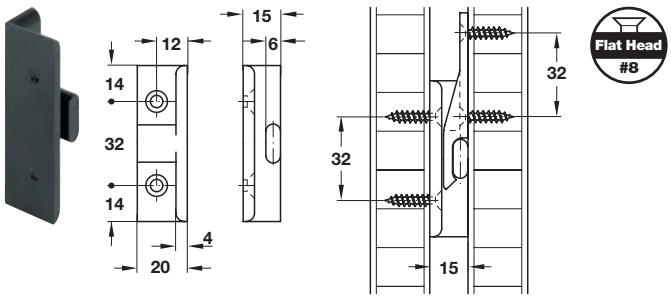

> For panel distance: 15 mm
> Material: Plastic; Color: black

Mounting	Item No.
Wood screws	262.51.380

→ AD 30 Angled Component

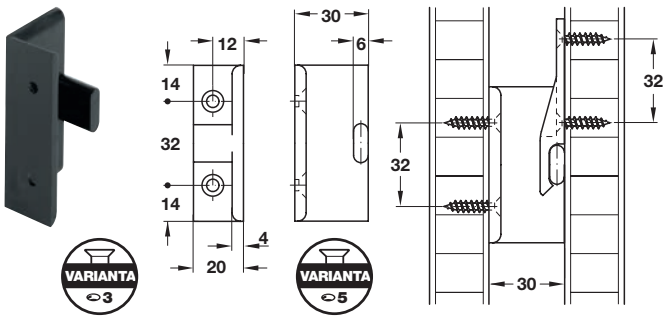

> For panel distance: 30 mm
> Material: Plastic; Color: black

Mounting	Item No.
Varianta screws	262.51.391

→ Panel Component

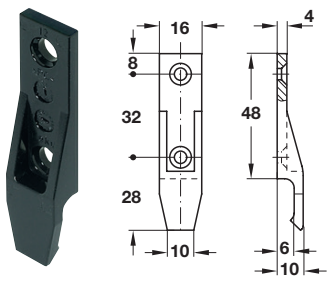

> Material: Plastic; Color: black

Mounting	Item No.
Wood screws	262.49.356
Varianta screws	262.49.357

Varianta screws	page 12.16
Flat head screws	pages 12.7-12.8, 12.10, 12.13

Dimensional data not binding. Dimensions in mm, inches are approximate. We reserve the right to alter specifications without notice.

Button-fix™ Panel Connecting Fittings

→ Type 1 Fix

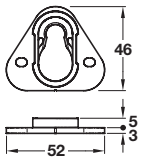

Flat Head #10 Pan Head #10

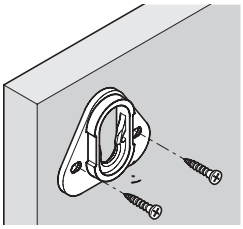

Ø 5 mm pan head screws for surface mounted option

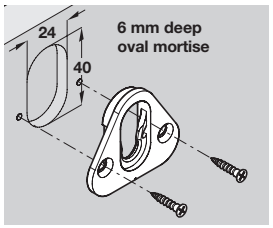

Ø 4.5 mm csk screws for mortised option

15 mm fall to engage panel

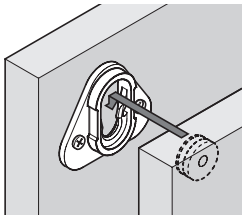

... or 15 mm slide to engage panel

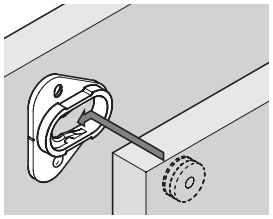

- > For parallel panels
- > Connects parallel panels and is ideal for applications where strength and security are crucial
- > Engage the buttons in the connector and slide the panel down by 15 mm until Button-fix™ goes 'click'
- > When surface mounted an 8 mm gap is created between the two attaching panels
- > Alternatively, you can mortise connector to reduce the gap between the two attaching panels to only 3 mm
- > Screw mounted
- > Material: Plastic

Color	Item No.
black	262.94.000

Note
Button must be ordered separately.

Varianta screws	page 12.16
Flat head screws	pages 12.7-12.8, 12.10, 12.13
Pan head screws	pages 12.9-12.10

→ Type 2 Fix

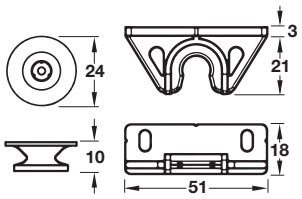

Pan Head #10 Flat Head #10 VARIANTA ⌀5

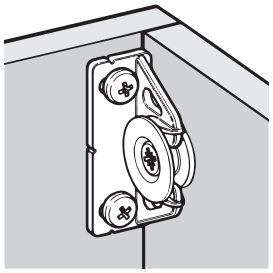

Ø 4.5 pan head wood screws for Fix connector

- > For 90° panels
- > Connects panels at 90° with a simple push/pull fit; ideal for applications where the emphasis is on ease of fit as opposed to strength
- > Does not require a 15 mm drop down engagement
- > Material: Plastic

Color	Item No.
black	262.94.024

→ Type 1 Flush Fix

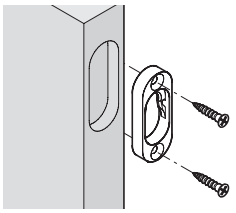

22 x 56 x 8 mm oval rebate
Ø 4.5 mm countersunk screws

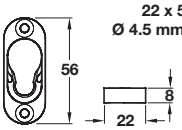

15 mm fall to engage panel

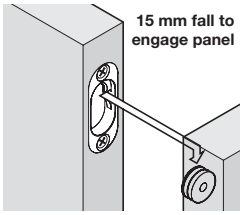

Flat Head #10

- > For parallel panels
- > For applications where panel to panel contact is required and fits a simple oval mortise
- > Can be mortised into the edge of a panel of at least 28 mm thick, in particular hollow core panels or the face of a panel of at least 18 mm thick
- > Allows you to fit panels together with no gap betwen, when fixing panels at least 18 mm thick (we recommend euro screws for fixing into panels 18–22 mm)
- > Suitable for secret fixing of drawer fronts or connecting work surfaces to carcasses, exhibition stands and peg rails
- > Material: Plastic

Color	Item No.
black	262.94.014

Note
Button must be ordered separately.

Dimensional data not binding. Dimensions in mm, inches are approximate. We reserve the right to alter specifications without notice.

Button-fix™ Panel Connecting Fittings

→ Type I Bonded Fix

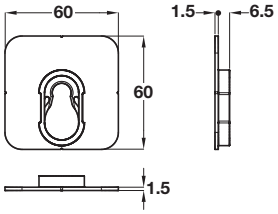

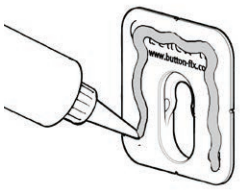

Clean surfaces with isopropyl alcohol before applying adhesive

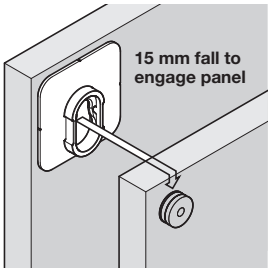

> For fitting parallel panels where screw mounting is not possible
> Suitable for decorative wall cladding using solid surface materials, compact laminate sheets less than 12 mm thick, honeycomb core panels, metal panels, glass panels, etc.
> Button-fix™ Type 1 Bonded Fix may be mortised for added strength
> Material: Nylon, glass filled

	Item No.
	262.94.012

Note
Button and self-adhesive Fix Pad must be ordered separately below.

→ Self-adhesive Fix-pad

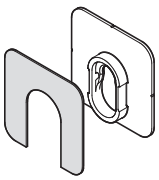

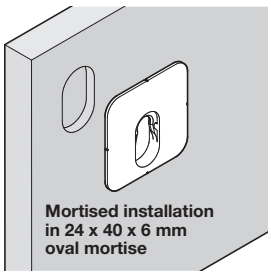

> For use with Button-fix™ Type 1 Bonded Fix when mortised
> Ideal when installation time is limited
> Material: Nylon, glass filled

	Item No.
	262.94.016

→ Type 1 Metal Fix

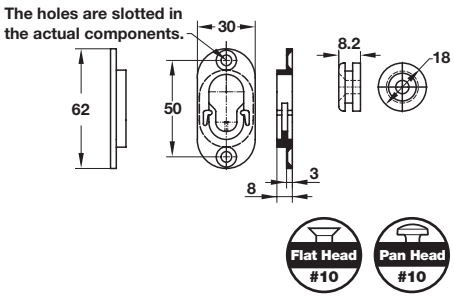

> Connects parallel panels and is ideal for applications where strength and security are critical
> Engage the buttons in the connector and slide the panel down by 15 mm until Button-fix goes 'click'
> When surface mounted an 8 mm gap is created between the two attaching panels
> Alternatively, you can mortise connector to reduce the gap between the two attaching panels to only 3 mm
> Screw mounted
> Ideal for use with fire-retardant materials
> Material: Zinc

Finish	Item No.
zinc-plated	262.94.019

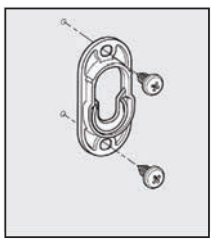

Ø5 mm pan head wood screws for surface mounted option

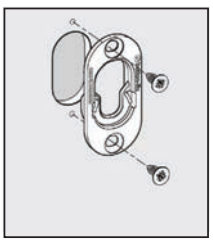

28 x 40 x 6 mm oval rebate Ø5 mm CSK wood screws for rebated option

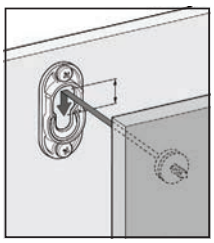

15 mm fall to engage panel...

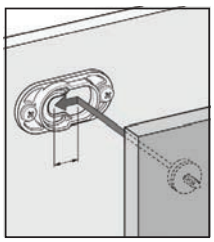

...or 15 mm slide to engage panel

Flat head screws	pages 12.7-12.8, 12.10, 12.13
Pan head screws	pages 12.9-12.10

Dimensional data not binding. Dimensions in mm, inches are approximate. We reserve the right to alter specifications without notice.

Button-fix™ Panel Connecting Fittings

→ Button

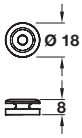

> To be used in conjunction with any of the Fixes
> Material: Plastic

Color	Mounting	Item No.
green	countersunk wood screw	262.94.030
orange	euro screw	262.94.031

Note Order screws separately.

→ Fix Marker Tool

> To be used in conjunction with Button-fix™ type 2
> Quickly and accurately align the Button-fix™ installation without measuring
> The marker will leave indents in the mating panel surface which can be used as a guide
> L x W: 50 x 25 mm
> Material: Plastic

Color	Item No.
red	002.84.751

→ Safety Cord

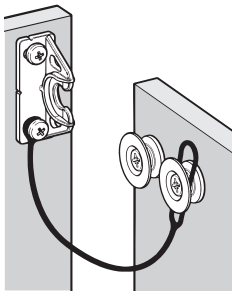

> To be used in conjunction with Button-fix™ type 2
> An additional button is used to capture the loop on the safety cord, installed adjacent to the fixing button
> The loop on the safety cord must be manually eased off the button to remove the panel
> Install 2 safety cords on a vertical panel
> Material: Plastic

Color	Item No.
black	262.94.025

Note Button must be ordered separately.

→ Button Marker Tool

> To be used in conjunction with Button-fix™ type 1
> Quickly and accurately align the Button-fix™ installation without measuring
> The marker will leave indents in the mating panel surface which can be used as a guide
> Ø: 18 mm
> Material: Plastic

Color	Item No.
red	002.84.750

→ Multi Jig

> Designed to help mortise Button-fix™ Type 1,Type 1 Bonded and Type 1 Flush Fix
> For use with a metric 12 mm cutter and a 30 mm guide brush
> Material: Plastic

	Item No.
	002.84.752

Supplied With
Magnetic steel plate – creates an oval mortise for Type 1 and Type 1 Bonded Fixes. Square plates can be oriented vertically or horizontally in the frame.
Magnetic steel plate – creates an oval mortise for Type 1 Flush Fix. Square plates can be oriented vertically or horizontally in the frame.

Varianta screws	page 12.16
Flat head screws	pages 12.7-12.8, 12.10, 12.13

Dimensional data not binding. Dimensions in mm, inches are approximate. We reserve the right to alter specifications without notice.

Fastmount® Panel Mounting System

> No visible fittings
> Self-aligning installation
> Perfect alignment and secure mounting
> Remove and refit panels multiple times
> Allows for panel flex and expansion
> Suitable for a variety of materials
> Self-tapping fittings for thinner materials

→ Low Profile, male

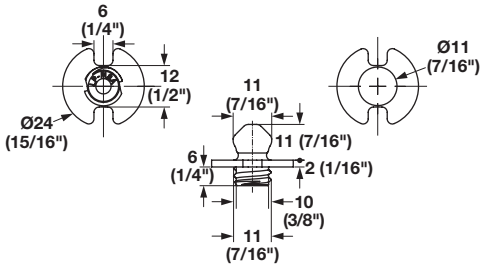

> Mounts into 10 mm drilled hole
> Pull-out weight capacity per clip: 5 kg+
> Material: Plastic

Color	Item No.
white	267.20.718

→ Low Profile, female

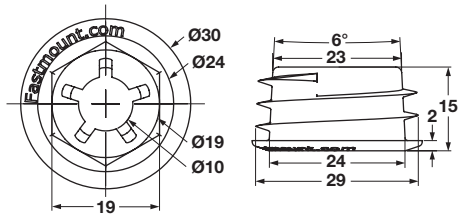

> Mounts into 25 mm drilled hole
> Pull-out weight capacity per clip: 5 kg+
> Material: Plastic

Color	Item No.
white	267.20.721

→ Installation Tool

> Use to install Fastmount self-tapping female fitting
> Material: Aluminum

Finish	Item No.
black	267.20.027

→ Installation Tool

> Use to install Fastmount self-tapping male fitting
> Material: Aluminum

Finish	Item No.
black	267.20.029

→ Low Profile, female

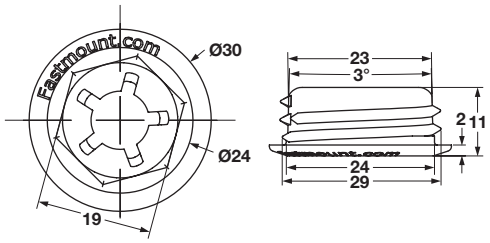

> Mounts into 25 mm drilled hole
> Pull-out weight capacity per clip: 5 kg+
> Material: Plastic

Color	Item No.
white	267.20.719

→ Installation Tool

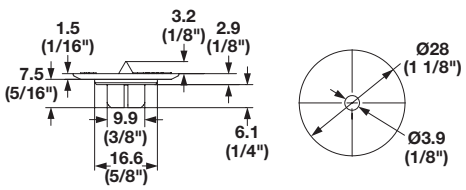

> Use to mark drilling location for Fastmount male fitting
> Material: Plastic; Center Point: Stainless Steel

Color	Item No.
red	267.20.943

Dimensional data not binding. Dimensions in mm, inches are approximate. We reserve the right to alter specifications without notice.

Fastmount® Panel Mounting System

> No visible fittings
> Self-aligning installation
> Perfect alignment and secure mounting
> Remove and refit panels multiple times
> Allows for panel flex and expansion
> Suitable for a variety of materials
> Self-tapping fittings

→ Standard Profile, heavy-duty, male

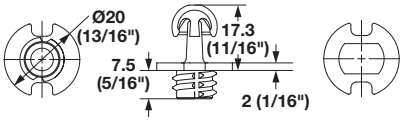

> Mounts into 10 mm drilled hole
> Pull-out weight capacity per clip: 10 kg+
> Material: Plastic

Color	Item No.
black	267.20.313

→ Standard Profile, male

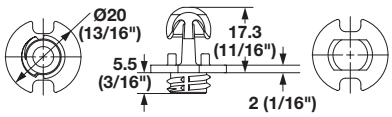

> Mounts into 10 mm drilled hole
> Pull-out weight capacity per clip: 5 kg+
> Material: Plastic

Color	Item No.
white	267.20.710

→ Standard Profile, female

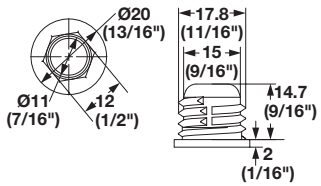

> Mounts into 16.8 mm drilled hole
> Pull-out weight capacity per clip: 5 kg+
> Material: Plastic

Color	Item No.
white	267.20.711

→ Complete Tool Kit

> For standard profile range

	Item No.
	267.20.028

→ Drill Bit

> Use to drill frame for Fastmount self-tapping female fitting
> 16.8 mm drilling diameter
> Material: Carbide-tipped

	Item No.
	267.20.032

→ Installation Tool

> Use to install Fastmount self-tapping male fitting
> Material: Aluminum

Finish	Item No.
black	267.20.029

→ Installation Tool

> Use to install Fastmount self-tapping female fitting
> Material: Aluminum

Finish	Item No.
black	267.20.040

→ Standard Profile, female

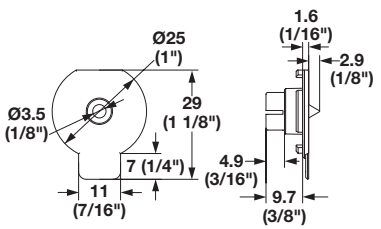

> Use to mark drilling location for Fastmount male fitting

	Item No.
	267.20.941

Dimensional data not binding. Dimensions in mm, inches are approximate. We reserve the right to alter specifications without notice.

Fastmount® Panel Mounting System

> No visible fittings
> Self-aligning installation
> Perfect alignment and secure mounting
> Remove and refit panels multiple times
> Allows for panel flex and expansion
> Suitable for a variety of materials
> Self-tapping fittings for thinner materials
> For thinner materials
> Screw or adhesive mounted
> Material: Plastic

→ Very Low Profile Standard Fittings

> Pull-out weight capacity per clip: 5 kg

Color	Item No.
gray	267.20.530

Supplied With
Female fitting
Male fitting
Stainless steel mounting screw

→ Very Low Profile Heavy-Duty Fittings

> Pull-out weight capacity per clip: 10 kg

Color	Item No.
black	267.20.331

Supplied With
Female fitting
Male fitting
Stainless steel mounting screw

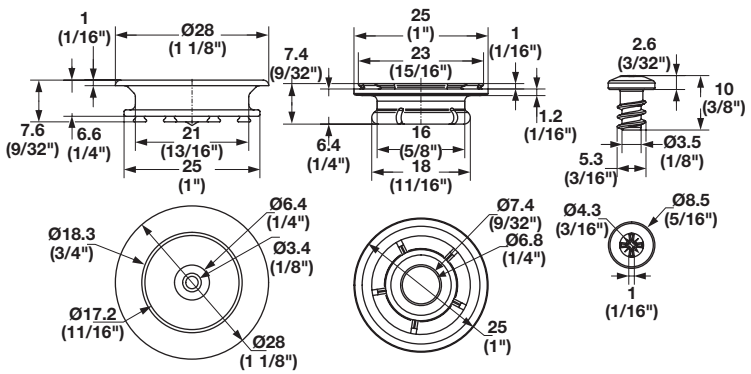

→ Installation Tool

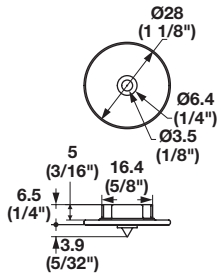

> Use to mark drilling location for Fastmount male fitting
> Material: Plastic; Center Point: Stainless Steel

Color	Item No.
red	267.20.930

Dimensional data not binding. Dimensions in mm, inches are approximate. We reserve the right to alter specifications without notice.

Uni-Connector

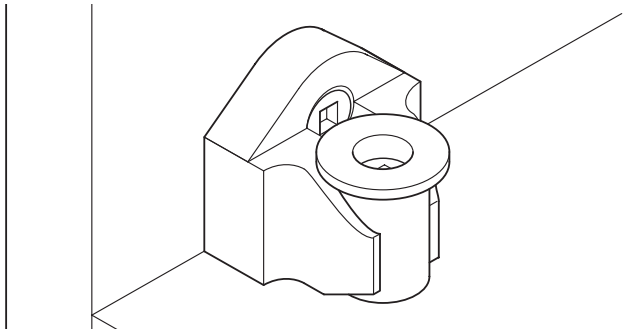

> Only vertical drilling is necessary
> Constructed of extremely durable material
> Easy to assemble & disassemble without tools
> An all-purpose connector for spacers/fillers, access panels and sink fronts
> Screws directly into wood or into a pre-drilled 5 mm hole if sleeves 042.98.051 are used, see page **11.12**
> Material: Plastic

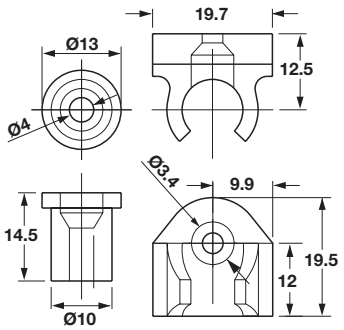

Color	Item No.
black	260.15.300

Supplied With
1 Male part
1 Female part

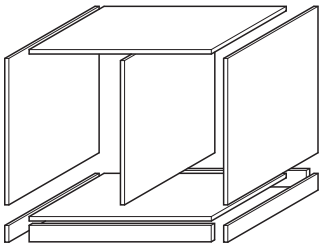

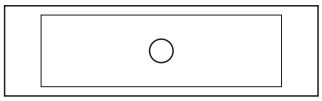

Note
For false drawer fronts or entire pieces of furniture.

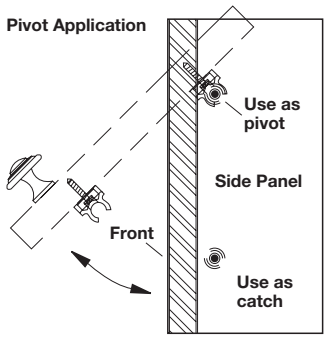

Note
Also may be used as a pivot.

→ Speaker Panel Connector

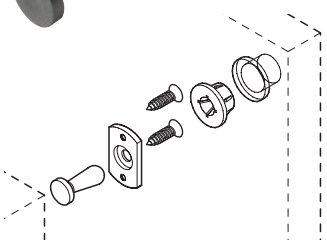

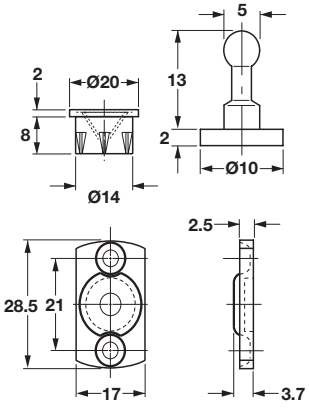

> To attach and remove panels, frames, etc. without tools
> Pin floats in mounting plate for flexible drilling tolerances
> Material: Plastic

Color	Item No.
black	260.71.303

Flat head screws pages 12.7-12.8, 12.10, 12.13

Dimensional data not binding. Dimensions in mm, inches are approximate. We reserve the right to alter specifications without notice.

Giro-bolt

→ Lock

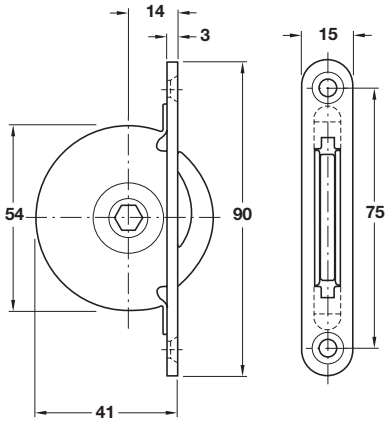

> With stop
> Provides quick yet exceptionally strong joints
> Unlimited applications for any situation requiring a strong, yet easily releasable joint
> Material: Steel

Finish	Item No.
zinc-plated	261.05.902

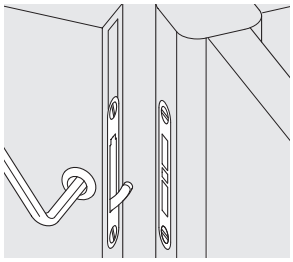

→ Strike Plate

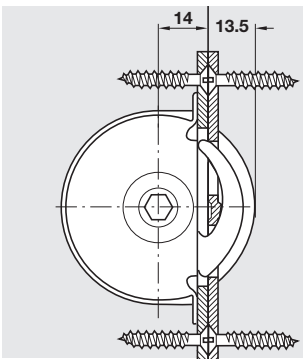

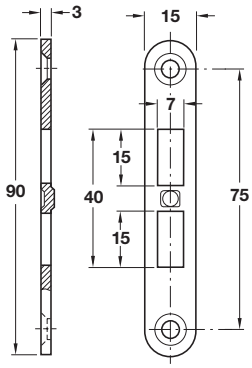

> For Giro-bolt lock
> Material: Steel

Finish	Item No.
zinc-plated	261.05.993

Flat Head #8

→ Sleeve

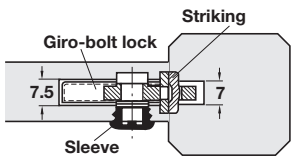

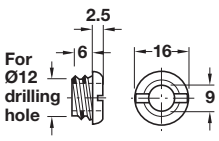

> For Giro-bolt lock
> With thread
> Material: Brass, unfinished

	Item No.
	261.05.984

→ Hex Key, 7 mm

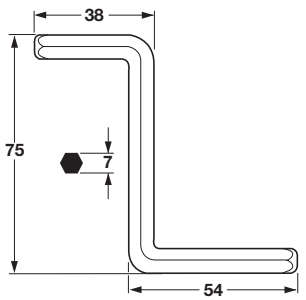

Flat Head #8

> Secures and releases the Giro-bolt lock
> Material: Steel

Finish	Item No.
zinc-plated	008.28.670

Flat head screws pages 12.7-12.8, 12.10, 12.13

Dimensional data not binding. Dimensions in mm, inches are approximate. We reserve the right to alter specifications without notice.

Connectors

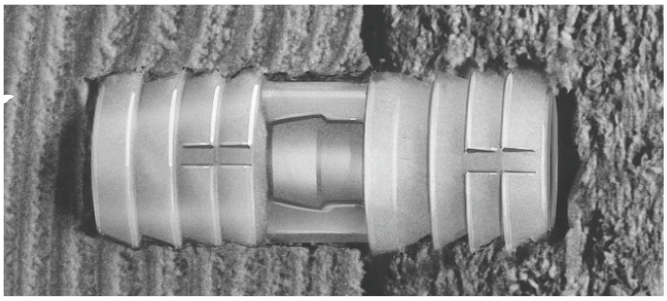

→ Two-Piece Connector

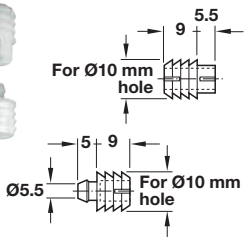

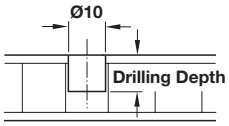

Drilling depth

for female	15 mm
for male	10 mm

> Press-fit
> Detachable
> Material: Nylon

Color	Item No.
natural	267.20.700

Supplied With
1000 pcs.

→ Miter Joint Connector

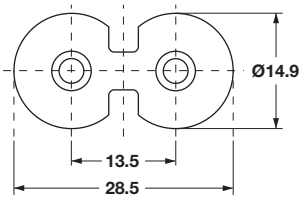

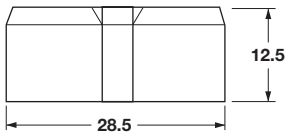

> W x H: 28.5 x 12.5 mm
> Material: Plastic

Color	Item No.
white	261.98.720

→ Two-Piece Connector

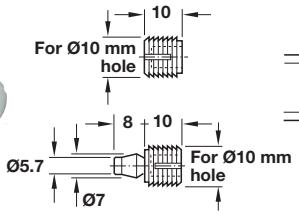

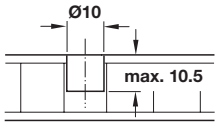

> Press-fit
> Detachable
> Material: Nylon

Color	Item No.
natural	267.21.720

Supplied With
1000 pcs.

→ Special Bit

> For press-fit connector
> Length: 63 mm (2 1/2")

Version	Item No.
HSS	006.47.012
HM-tipped	006.47.076

→ Dowel Center Point Marker

> Marking drilled holes for two-piece dowel connectors and dowels
> Diameter: 10 mm (3/8")
> Material: Steel, burnished

	Item No.
	006.47.068

Supplied With
10 pcs.

Installation
Push in dowel center point marker, mark drilling position, remove dowel center point marker.

Dimensional data not binding. Dimensions in mm, inches are approximate. We reserve the right to alter specifications without notice.

Connecting Brackets

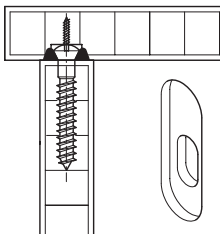

> Concealed hanger plates
> Extremely strong and invisible
> Components can be assembled or disassembled without tools
> Profiled plates for machined-recess installation
> For use as RTA fittings for beds or upholstered furniture
> Can also be inserted into a groove
> Dimensions of recesses should be taken directly from the fittings

→ Keyhole Plate

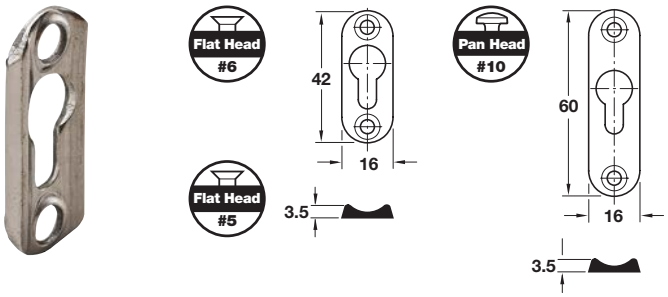

> For recessing
> Material: Steel, unfinished

Height	Item No.
42	273.55.004
60	271.52.003

→ Keyhole Fitting

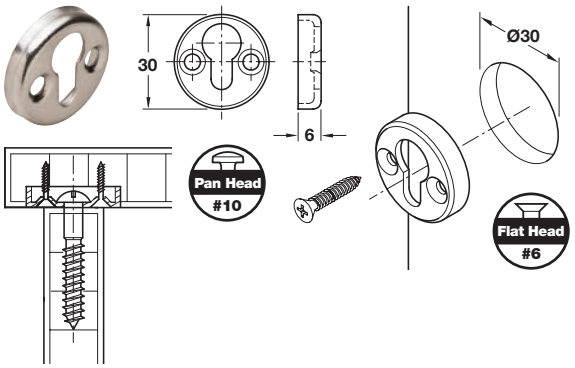

> For drilled holes
> Material: Steel, unfinished

	Item No.
	271.61.306

→ Mounting Plate

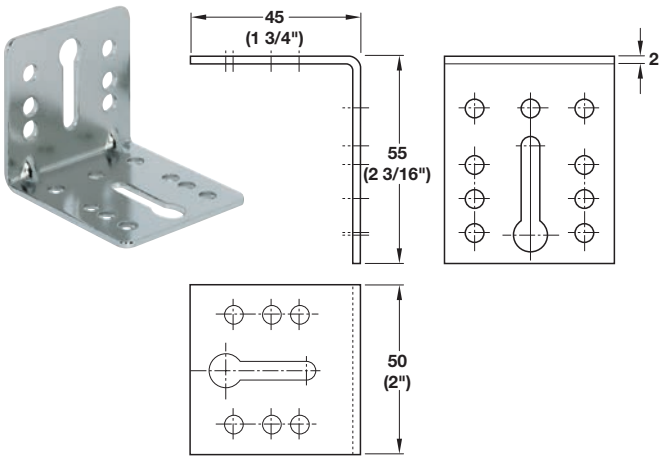

> Screw mounted with 2 slots and additional screw holes
> Material: Steel

Finish	Item No.
nickel-plated	558.12.943

Flat head screws	pages 12.7-12.8, 12.10, 12.13
Pan head screws	pages 12.9-12.10

Dimensional data not binding. Dimensions in mm, inches are approximate. We reserve the right to alter specifications without notice.

Bed Fittings

→ "Berliner"

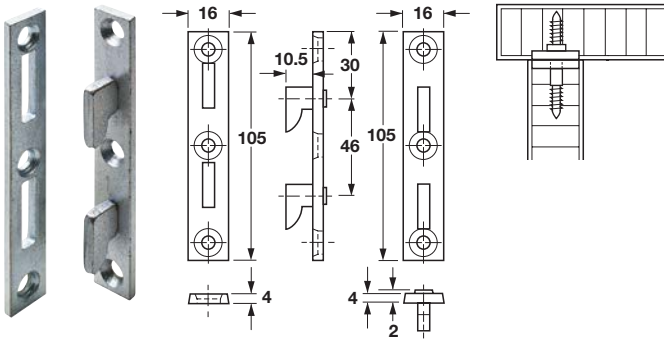

> For machined recess installation
> Material: Steel, unfinished

	Item No.
	271.33.008

Supplied With
4 Male parts
4 Female parts

→ "Berliner"

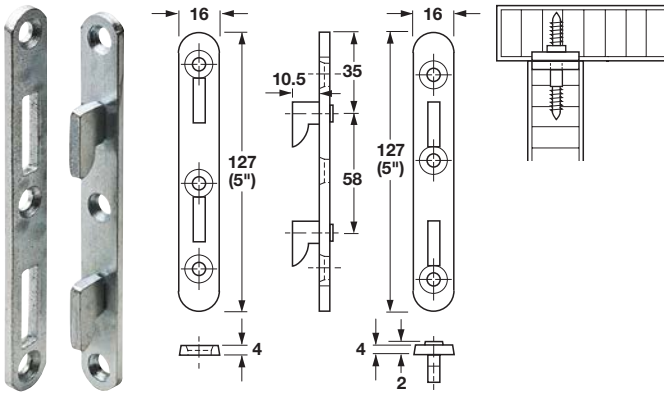

> Material: Steel, unfinished

	Item No.
	271.33.090

Supplied With
4 Male parts
4 Female parts

Dimensional data not binding. Dimensions in mm, inches are approximate. We reserve the right to alter specifications without notice.

Bed Fittings

→ Connecting Bracket

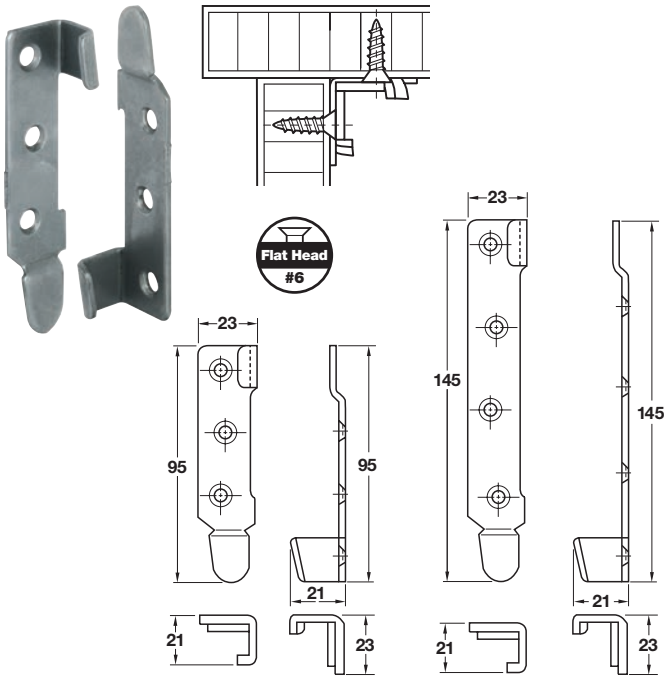

> Screw mounted
> Left or right use
> Hook-type fastening
> Sturdy design
> Material: Steel, galvanized

Length	Item No.
95	271.05.906
145	271.05.915

Supplied With
4 Left hand parts
4 Right hand parts

→ "Noval K"

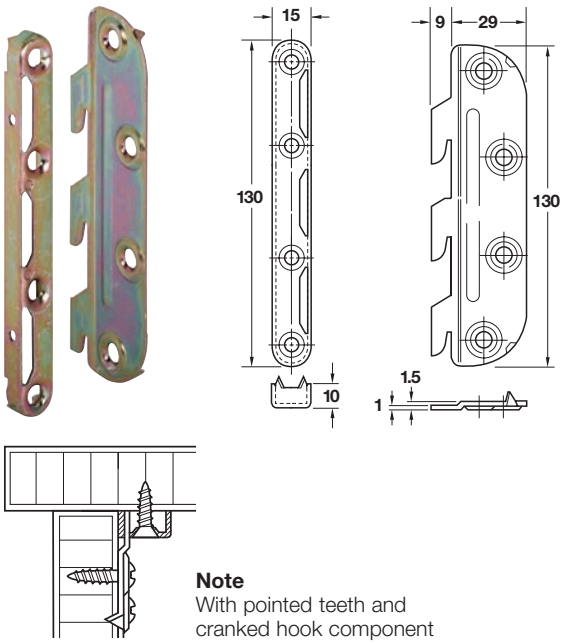

> Screw mounted
> Material: Steel

Finish	Item No.
silver chromated	271.03.930

Supplied With
4 Female parts
2 Left hooks
2 Right hooks

Note
1 set is required to connect 4 corners.

Note
With pointed teeth and cranked hook component

Flat head screws pages 12.7-12.8, 12.10, 12.13

Dimensional data not binding. Dimensions in mm, inches are approximate. We reserve the right to alter specifications without notice.

Bed Fittings

→ TOMMO

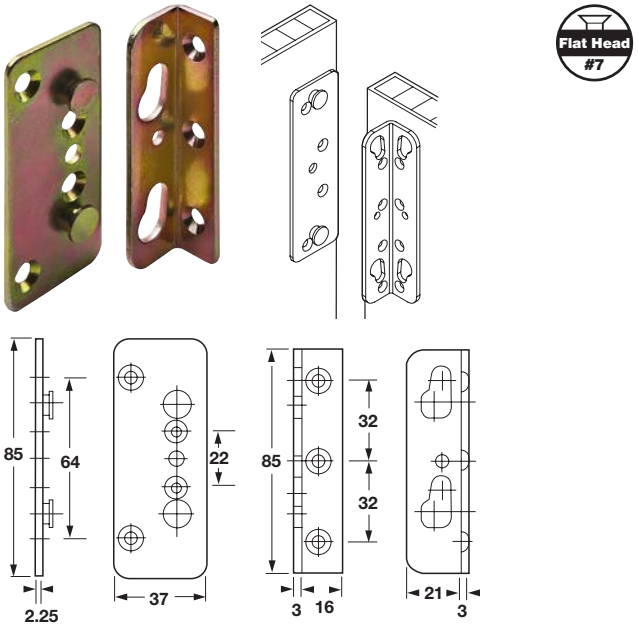

> Screw mounted
> Material: Steel

Finish	Item No.
yellow galvanized	271.09.910

Supplied With
2 Left hand brackets
2 Right hand brackets
4 Plates

→ TOMMO

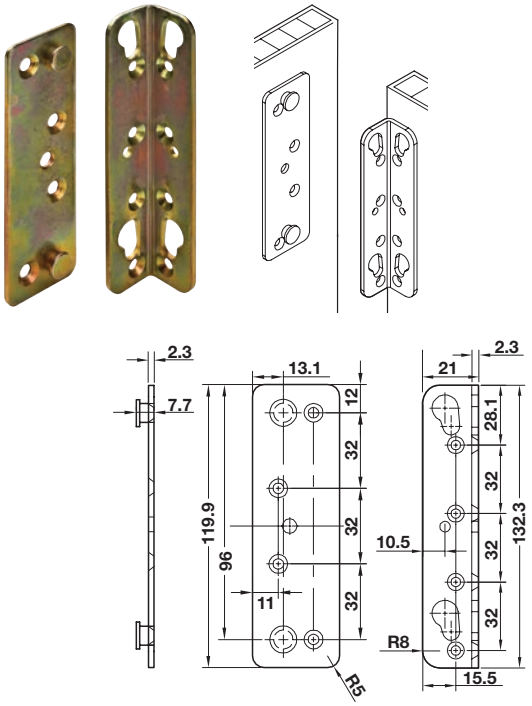

> Screw mounted
> Material: Steel

Finish	Item No.
yellow galvanized	271.09.930

Supplied With
4 Unhanded brackets; 4 Plates

→ Double

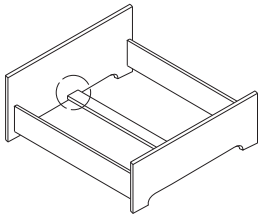

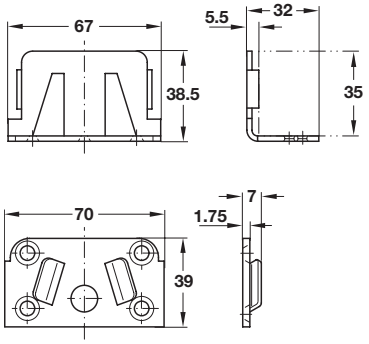

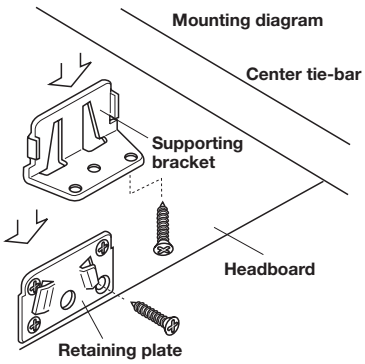

> Screw mounted
> For beds with a central tie-bar
> Capable of separation
> The supporting bracket is screwed to the tie-bar, the retaining plate to the head or foot
> The bed elements are securely held by the angled retaining flanges
> Material: Steel, galvanized

	Item No.
	273.03.515

Supplied With
1 Male part
1 Female part

Flat Head #6 Flat Head #8

Flat head screws pages 12.7-12.8, 12.10, 12.13

Dimensional data not binding. Dimensions in mm, inches are approximate. We reserve the right to alter specifications without notice.

Scissor Jacks

→ Head Section

Flat Head #6

Pan Head #10

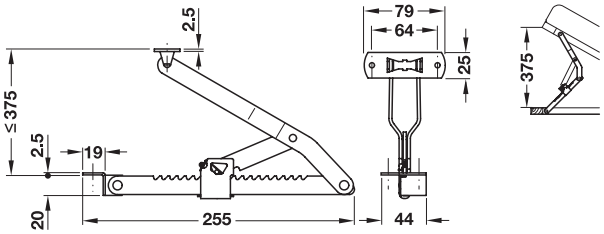

> Raising height: max. 375 mm in 19 steps
> Material: Steel

Finish	Item No.
blue galvanized	274.01.830

Supplied With
Mounting plates

Applications for head section scissor jacks include...

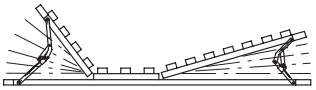

... adjustable head and foot sections of mattress frames ...

... or couches and French beds ...

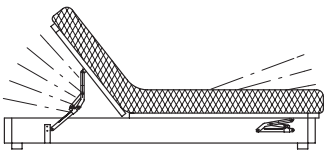

Lowering is achieved by lifting over the upper end position.

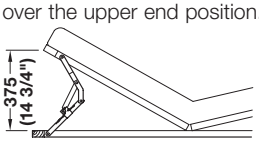

→ Foot Section

Flat Head #6

Pan Head #10

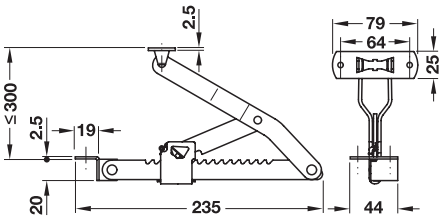

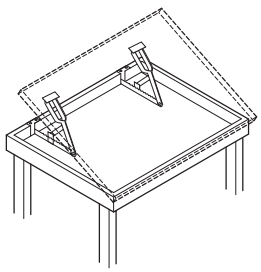

> Raising height: max. 300 mm in 18 steps
> Material: Steel

Finish	Item No.
blue galvanized	274.00.833

Supplied With
Mounting plates

Upper mounting plate
with quick-action catch

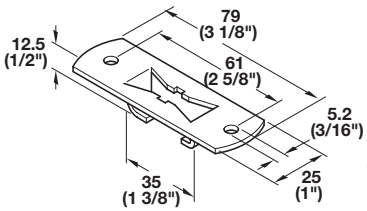

Lower mounting plate
riveted

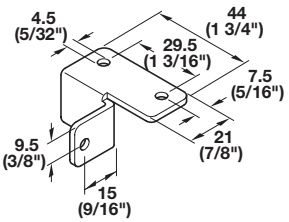

Lowering is achieved by lifting over the upper end position.

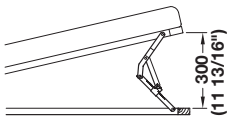

Flat head screws	pages 12.7-12.8, 12.10, 12.13
Pan head screws	pages 12.9-12.10

Dimensional data not binding. Dimensions in mm, inches are approximate. We reserve the right to alter specifications without notice.

Connectors

> Ideally suited for joining chair frames, sofa frames and other furniture frames
> The nylon pressure plate is forced against the threads of the stud bolt upon tightening, creating a very strong joint which never needs retightening
> Material: Steel, galvanized; Plate: Nylon; Color: white

→ Universal Connector

	Item No.
	260.52.906

Supplied With
4 M6 cross-nut bolts, with center thread
4 M6 stud bolts
4 Pressure plates
4 Washers
4 M6 hexagon nuts

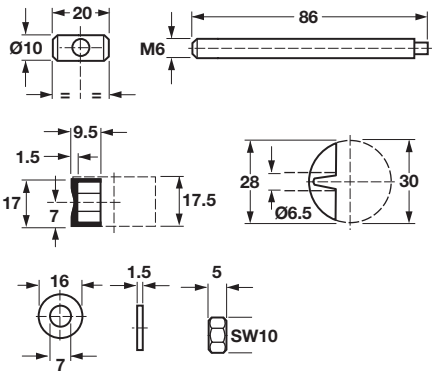

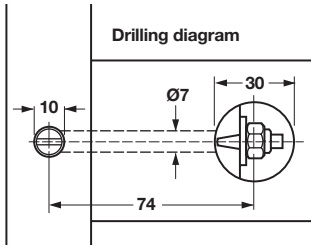

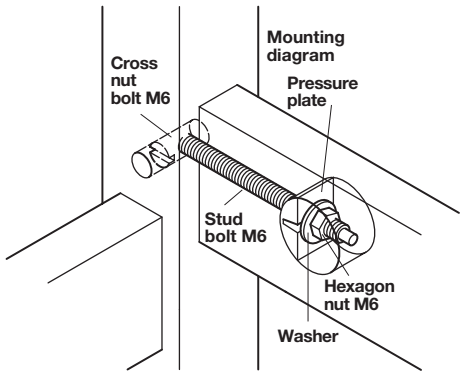

Dimensional data not binding. Dimensions in mm, inches are approximate. We reserve the right to alter specifications without notice.

Connectors

> Compact design
> High stability
> Ideal for box spring beds, slim-line frame construction, high-leg designs
> Quick and easy assembly
> Reduces transport expense
> Material: Steel/Plastic; Finish: zinc-plated/white

→ Rack Connector

	Item No.
	273.42.921

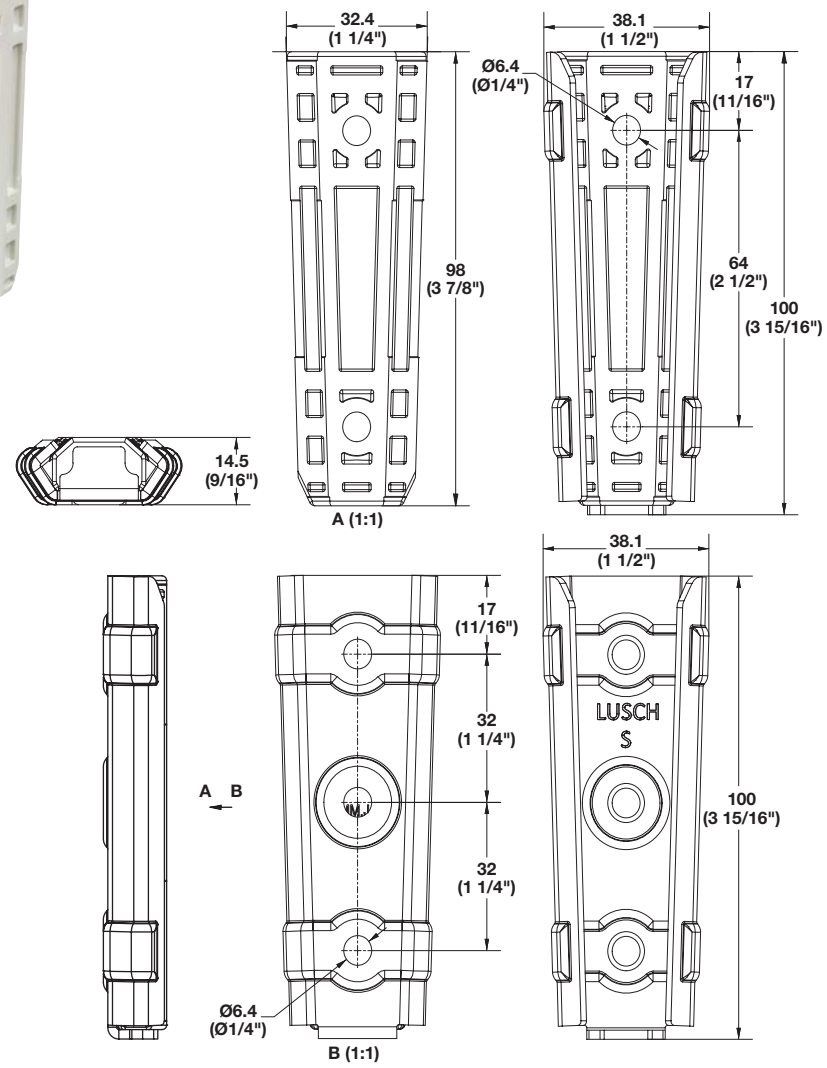

Dimensional data not binding. Dimensions in mm, inches are approximate. We reserve the right to alter specifications without notice.

Connectors

> High stability
> Ideal for box spring beds, slim-line frame construction, high-leg designs
> Quick and easy assembly
> Reduces transport expense
> Locking feature
> Material: Steel/Plastic; Finish: zinc-plated/white

→ Rack Connector

	Item No.
	273.42.922

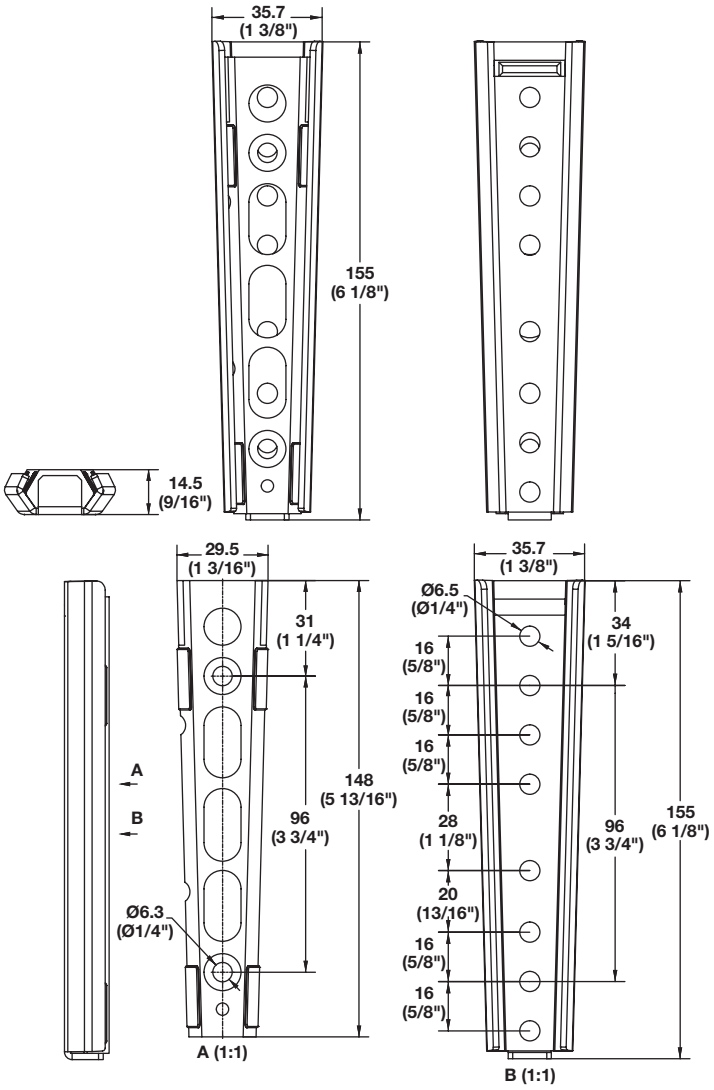

Dimensional data not binding. Dimensions in mm, inches are approximate. We reserve the right to alter specifications without notice.

Connectors

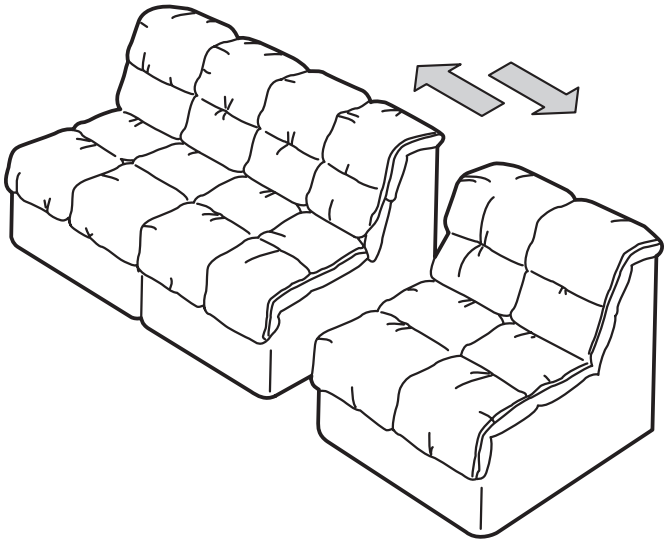

> Connects modular upholstered furniture to form seating rows or groups
> Easily attaches to the bottom of the upholstered pieces and connects to the corresponding angle bracket
> The catch fork is turned and the upholstered pieces are pushed together; the connection is released by lifting
> When not in use the device can be pivoted under the upholstery pieces
> Furniture should not be moved with the ganging device attached as it may cause damage to the mechanism
> Ganging devices attach furniture laterally and are not intended to support weight

→ Upholstery Ganging Device

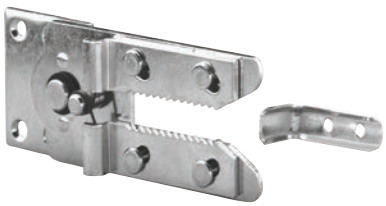

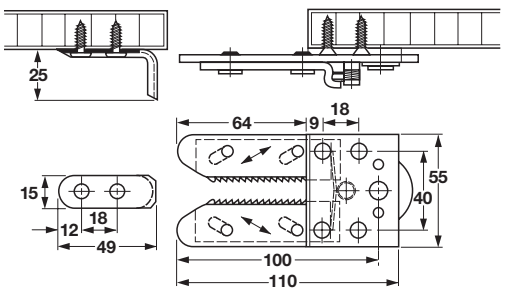

> With attachment plate for horizontal mounting
> Material: Steel; Finish: zinc-plated

Version	Item No.
Standard	635.88.910
Premium	635.88.911

Supplied With
Plate
Fork

→ Upholstery Ganging Device

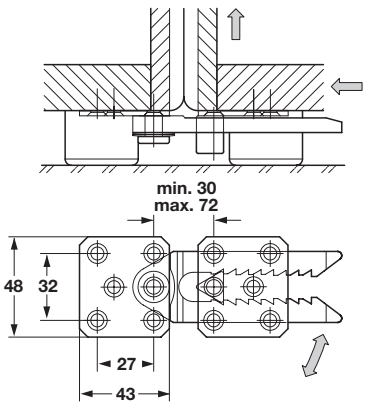

> With attachment plate for horizontal mounting on base
> Material: Plate: Steel; Finish: zinc-plated; Fork: Nylon

Version	Item No.
Standard	635.88.928
Premium	635.88.929

Supplied With
Plate
Fork

Flat head screws	pages 12.7-12.8, 12.10, 12.13
Pan head screws	pages 12.9-12.10

Dimensional data not binding. Dimensions in mm, inches are approximate. We reserve the right to alter specifications without notice.

Connectors

→ 1/4-20 Cross Dowel, Phillips

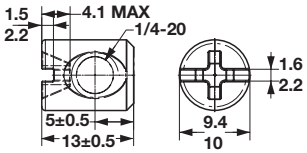

> Off-center thread
> Material: Zinc die-cast, galvanized

	Item No.
	264.86.913

→ 1/4-20 Joint Connector Bolt, Type JCB-B

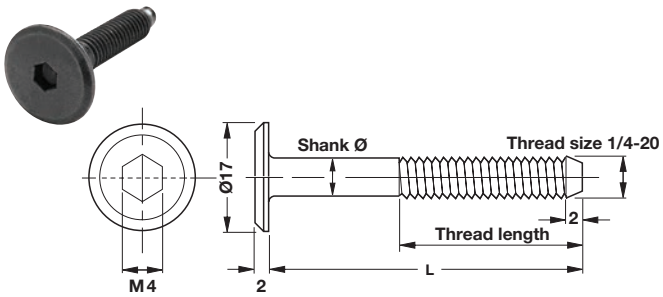

> Flat head Ø17 mm with M4 hexagon socket
> Material: Steel

Length	Thread length	antique bronze	black oxide	nickel-plated
30	20	264.76.130	264.76.330	264.76.730
35	25	264.76.135	264.76.335	264.76.735
40	30	264.76.140	264.76.340	264.76.740
45	35	264.76.145	-	264.76.745
50	40	264.76.150	264.76.350	264.76.750
55	40	264.76.155	-	264.76.755
60	40	264.76.160	-	264.76.760
70	40	264.76.170	264.76.370	264.76.770
80	40	264.76.180	-	264.76.780
100	40	264.76.200	-	-

→ 1/4-20 JCN Nut

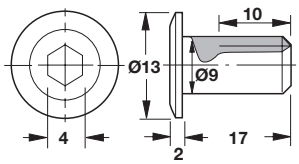

> Flat head Ø13 mm with M4 hexagon socket
> Material: Steel

Finish	Item No.
black oxide	267.10.306
nickel-plated	267.10.606

→ 1/4-20 Cross Dowel, Slotted

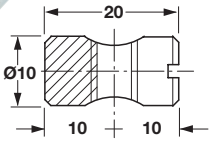

> Center thread
> Material: Steel

Finish	Item No.
zinc-plated	264.86.020

→ 1/4-20 JCN Nut

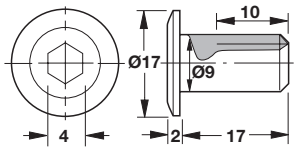

> Flat head Ø17 mm with M4 hexagon socket
> Material: Steel

Finish	Item No.
antique bronze	267.10.116
black oxide	267.10.316
nickel-plated	267.10.616
black	267.10.317

→ 1/4-20 Joint Connector Bolt, Type JCB-C

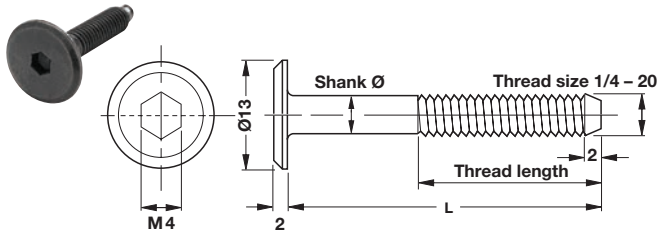

> Flat head Ø13 mm with M4 hexagon socket
> Material: Steel

Length	Thread length	nickel-plated	black oxide
30	20	264.88.630	264.88.330
35	25	264.88.635	264.88.335
40	30	264.88.640	264.88.340
50	40	-	264.88.350
55	40	-	264.88.355
60	40	-	264.88.360
70	40	264.88.670	-

→ Hex Key

> M4
> Material: Steel, unfinished

	Item No.
	008.28.044

Dimensional data not binding. Dimensions in mm, inches are approximate. We reserve the right to alter specifications without notice.

Connectors

→ M4 Sleeve

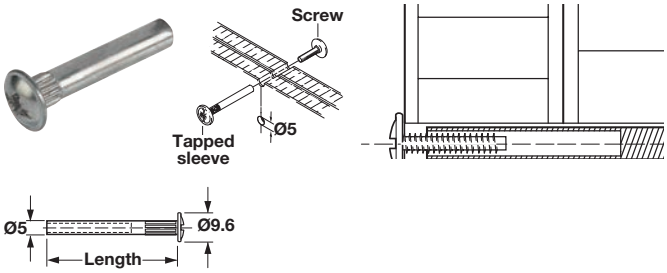

> With M4 internal thread and combination head for flat-blade, Phillips and cross-slot
> Material: Steel; Finish: nickel-plated

Clamping range	Length	Item No.
28–36 (1 1/8"–1 7/16")	27 (1 1/16")	267.01.715
37–45 (1 7/16"–1 3/4")	35 (1 3/8")	267.01.717

→ Fastening Screw

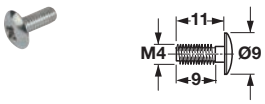

> M4 screw with raised head and cross-slot Z, size 2
> Material: Steel

Finish	Item No.
nickel-plated	267.00.720

→ M6 Connecting Screws

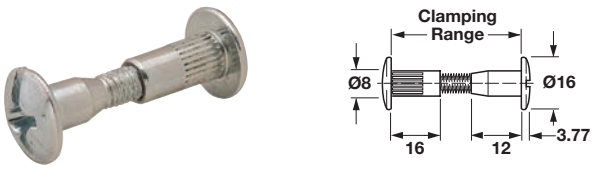

> Complete fitting
> For slotted or Phillips drive
> Female component has ribs
> Material: Steel, galvanized

Length	Item No.
32–38 (1 1/4"–1 1/2")	267.07.902
36–42 (1 7/16"–1 11/16")	267.07.903

→ M4 Screw

> With universal head for flat-blade, Phillips and cross-slot
> Material: Steel

Finish	Length	Item No.
nickel-plated	15 (9/16")	022.34.157
zinc	23 (7/8")	022.35.234

Supplied With
100 pcs.

→ Sleeves

> With M4 internal thread
> Material: Steel

Length	unfinished	zinc-plated
15 (9/16")	-	267.00.911
18 (11/16")	267.00.012	267.00.912
22 (7/8")	-	267.00.913
30 (1 3/16")	-	267.00.916

→ M6 Connecting Screws

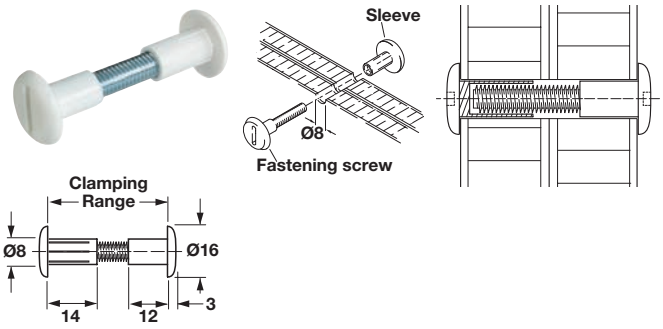

> Complete fitting
> With slotted drive
> Female component has ribs
> Material: Plastic; Color: white; Bolt: Steel, galvanized

Clamping range	Item No.
30–36 (1 3/16"–1 7/16")	267.25.701
34–40 (1 3/8"–1 9/16")	267.25.702

Dimensional data not binding. Dimensions in mm, inches are approximate. We reserve the right to alter specifications without notice.

Wall Anchors

→ Snaptoggle® Bolt

> Ideal for heavy loads in hollow walls, ceilings and floors
> Can install through hollow material from 10–92 mm (3/8"–3 5/8") thick
> Easy and clean to install, only requires a Ø1/2" hole
> Hangs up to 102 kg (225 lbs.) shear strength
> Requires a machine bolt for fixture attachment (sold separately, see below)
> Material: Steel; Straps: Nylon

1/4" - 20

Color	Item No.
white	051.17.952

3/16" - 24

Color	Item No.
white	051.17.951

Supplied With
100 pcs.

→ Snaptoggle® Bolt

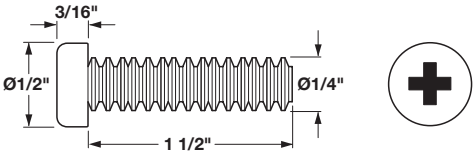

> Pan head with #2 Phillips Drive

1/4" - 20

Length	Item No.
38 (1 1/2")	020.42.275
51 (2")	020.42.277
64 (2 1/2")	020.42.280
76 (3")	020.42.282

3/16" - 24

Length	Item No.
38 (1 1/2")	020.44.275
64 (2 1/2")	020.44.278
76 (3")	020.44.280

Supplied With
50 pcs.

→ Furniture Anti-tip Kit

> Prevents furniture tip overs
> Attach to solid wood only
> Exceeds ASTM standard F 3096-14
> Weight capacity: 181 kg (400 lbs.)

	Item No.
	271.98.110

→ TV Anti-tip Kit

> Prevents TV tip overs
> Attach to wood wall stud
> Weight capacity: 181 kg (400 lbs.)

	Item No.
	271.98.111

Dimensional data not binding. Dimensions in mm, inches are approximate. We reserve the right to alter specifications without notice.

Glass Fittings

→ Mirror Holder

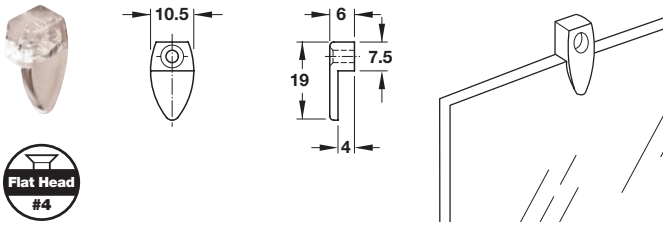

> Oval shaped
> Material: Plastic, transparent

Item No.
291.09.402

→ Glass Retainer Clip

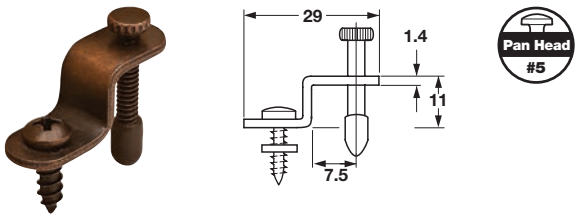

> Material: Steel

Finish	Item No.
bronzed	291.02.109

→ Glass Retainer Clip

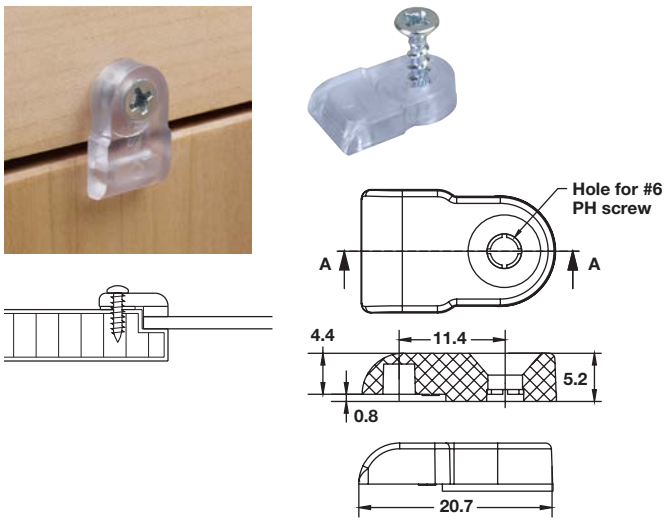

> Retainer clip includes pre-installed screw for easy installation
> Material: Plastic, transparent

Offset	Item No.
0.8 (1/32") retainer clip	291.03.451
4.0 (5/32") insert	291.03.457
7.0 (9/32") insert	291.03.453
8.0 (5/16") insert	291.03.455

Note
Must order retainer clip and insert separately.

291.03.457

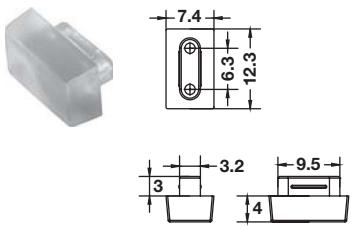

291.03.453

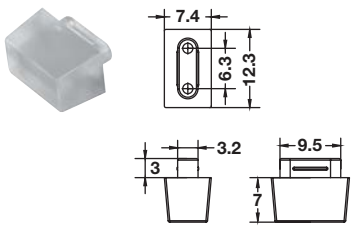

291.03.455

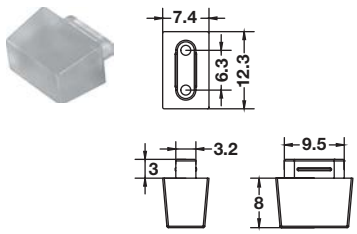

Pan head screws pages 12.9-12.10

Dimensional data not binding. Dimensions in mm, inches are approximate. We reserve the right to alter specifications without notice.

Multi-Purpose Connectors - Internal Thread 1/4-20

→ T-Nuts

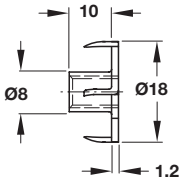

> Pronged
> Material: Steel

Finish	Item No.
zinc-plated	031.06.004

→ Screw-In Sockets

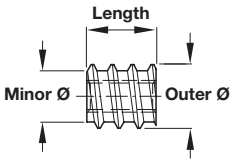

> Screwdriver slot
> Material: Steel, unfinished

Length	Minor Ø	Outer Ø	Item No.
12	7	10	030.12.031
15	9	12	030.12.034

→ Spreading Dowel

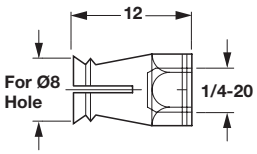

> Extremely high pull-out strength
> For press-fit installation in Ø8 mm holes
> Min. drill depth: 12.25 mm (13.5 mm recommended)
> Material: Brass

Version	Item No.
With nylon ball	039.01.068
Without nylon ball	039.01.160

→ Type E Insert

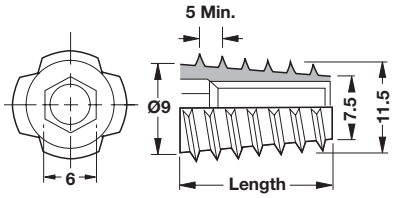

> Screw mounted
> 6 mm hexagonal socket
> Material: Zinc, die-cast

Finish	Length	Item No.
nickel-plated	13	030.06.166
zinc-plated	20	030.06.269

→ Type D Insert

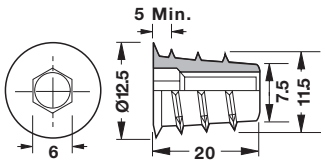

> Screw mounted
> 6 mm hexagonal socket
> Blind Hole size 9.0
> Material: Zinc, die-cast

	Item No.
	030.02.266

→ Type B Insert

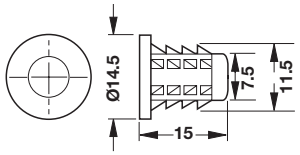

> Knock-in
> Blind Hole size 9.0
> Material: Zinc, die-cast

	Item No.
	039.03.062

Dimensional data not binding. Dimensions in mm, inches are approximate. We reserve the right to alter specifications without notice.

Multi-Purpose Connectors

→ T-Nuts

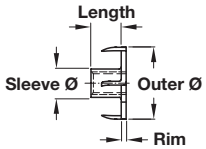

> Pronged
> Material: Steel, unfinished

Internal thread	Outer Ø	Sleeve Ø	Rim	Length	Item No.
M4	15	5.5	1	7.5	031.00.249
M6	19	7.5	1.3	8	031.00.267
M8	22.5	10	1.5	9.5	031.00.285
M10	26	11.5	2	11	031.00.301

→ Screw-in Sockets

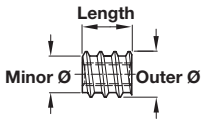

> Screwdriver slot
> Internal thread M4
> Material: Steel, unfinished

Outer Ø	Minor Ø	Length	Item No.
8	5.5	8	030.00.100

Supplied With
1000 pcs.

> Internal thread M6

Outer Ø	Minor Ø	Length	Item No.
10	7	12	030.00.351

Internal thread	Outer Ø	Minor Ø	Length	Item No.
M8	14	11.5	15	030.00.404
M10	18.5	15	15	030.00.502

Supplied With
100 pcs.

→ Glue-in Sockets

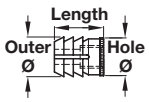

> Glue grooves
> Internal thread M4
> Material: Nylon; Color: natural

Outer Ø	Hole Ø	Length	Item No.
8.5	8	8	039.33.140
8.5	8	10	039.33.042

> Internal thread M6

Outer Ø	Hole Ø	Length	Item No.
8.5	8	11	039.33.462

> Internal thread M6

Outer Ø	Hole Ø	Length	Item No.
11	10	11	039.33.266

Supplied With
5000 pcs.

Dimensional data not binding. Dimensions in mm, inches are approximate. We reserve the right to alter specifications without notice.

Dowel Connectors

→ Spreading Dowel

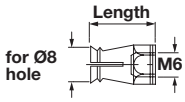

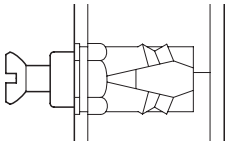

> With M6 internal thread for press-fit installation
> Extremely high pull-out strength
> Drill depth should be dowel length plus 2 mm
> Material: Brass, bright

Version	Length	Item No.
W/O nylon ball	9.5	039.00.267
W/nylon ball	12	039.00.061

→ Spreading Dowel

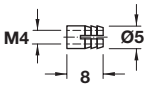

> With M4 internal thread
> Material: Brass, bright

	Item No.
	051.45.004

→ Spreading Dowel

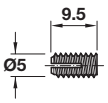

> Without collar
> Material: Nylon

Color	Item No.
natural	042.98.033

→ Spreading Dowel

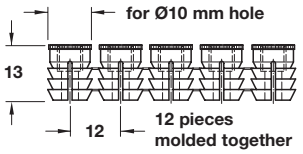

> With M6 internal thread
> Material: Nylon

Color	Item No.
natural	039.35.064

→ Spreading Sleeve

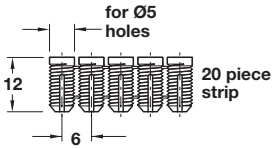

Strip of 20 spreading dowels integrally injection moulded.

> Without collar
> Material: Nylon

Color	Item No.
natural	042.98.051

Dimensional data not binding. Dimensions in mm, inches are approximate. We reserve the right to alter specifications without notice.

Supports for Wood Shelves

→ Ø3 mm

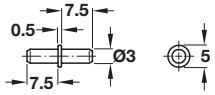

> Weight capacity: 60 kg (130 lbs.)
> Material: Steel, galvanized

	Item No.
	282.43.914

→ Ø3 mm

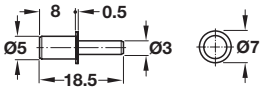

> Weight capacity: 60 kg (130 lbs.)
> Material: Steel

Finish	Item No.
nickel-plated	282.43.727

→ Ø3 mm

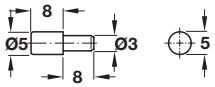

> Weight capacity: 60 kg (130 lbs.)
> Material: Steel

Finish	Item No.
nickel-plated	282.06.706

→ Ø3 mm

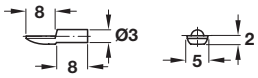

> Weight capacity: 60 kg (130 lbs.)
> Material: Steel

Finish	Item No.
nickel-plated	282.04.720

→ Ø4 mm

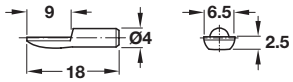

> Weight capacity: 60 kg (130 lbs.)
> Material: Steel

Finish	Item No.
nickel-plated	282.04.702

→ Ø3 mm

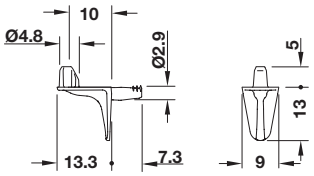

> Patented design assures minimum lowering of shelf under heavy weight
> With three wedged ribs and shelf fixing plug
> Weight capacity: 25 kg (55 lbs.)
> Material: Zinc die-cast

Finish	Item No.
nickel-plated	282.25.727

→ Ø3 mm

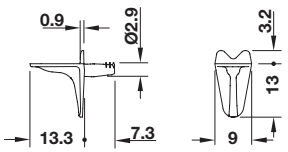

> Patented design assures minimum lowering of shelf under heavy weight
> With three wedged ribs
> Weight capacity: 37.6 kg (83 lbs.)
> Material: Zinc die-cast

Finish	Item No.
nickel-plated	282.25.717

Dimensional data not binding. Dimensions in mm, inches are approximate. We reserve the right to alter specifications without notice.

Supports for Wood Shelves

→ Ø5 mm

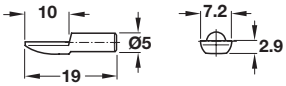

> Weight capacity: 80 kg (175 lbs.)
> Material: Steel

Finish	Item No.
nickel-plated	282.04.711
brass-plated	282.04.515
bronze	282.04.113

→ Ø5 mm

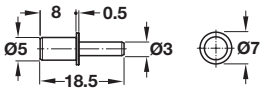

> Weight capacity: 60 kg (130 lbs.)
> Material: Steel

Finish	Item No.
nickel-plated	282.43.727

→ Ø5 mm

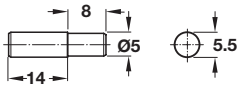

> Weight capacity: 80 kg (175 lbs.)
> Material: Steel

Finish	Item No.
nickel-plated	282.42.702

→ Ø5 mm

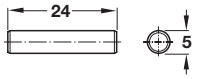

> Weight capacity: 80 kg (175 lbs.)
> Material: Steel

Finish	Item No.
nickel-plated	282.40.708
brass-plated	282.40.502

→ Ø5 mm

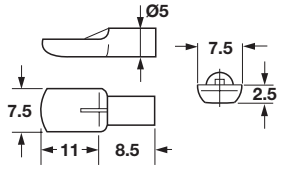

> With anti-slide feature
> Tap gently to prevent shelf movement
> The fin cuts itself into the shelf and prevents it from sliding
> Weight capacity: 80 kg (175 lbs.)
> Material: Steel

Finish	Item No.
nickel-plated	282.04.712
brass-plated	282.04.512

→ Ø5 mm

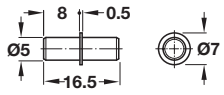

> Weight capacity: 34 kg (75 lbs.)
> Material: Steel

Finish	Item No.
bronzed	282.43.101
zinc-plated	282.43.905

→ Ø5 mm

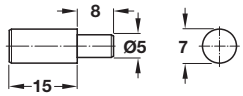

> Weight capacity: 80 kg (175 lbs.)
> Material: Steel

Finish	Item No.
nickel-plated	282.38.708
brass-plated	282.38.502

→ Ø5 mm

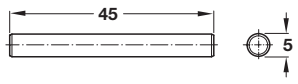

> Weight capacity: 80 kg (175 lbs.)
> Material: Steel

Finish	Item No.
nickel-plated	282.41.705

Dimensional data not binding. Dimensions in mm, inches are approximate. We reserve the right to alter specifications without notice.

Supports for Wood Shelves

→ Ø5 mm

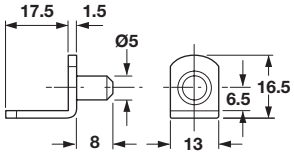

> Angular with riveted pin
> Material: Steel

Finish	Item No.
brass-plated	282.11.501
nickel-plated	282.11.707

→ Ø5 mm

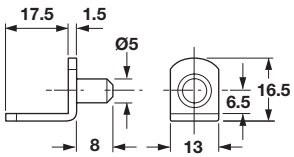

> Angular with riveted pin and securing screw hole
> Material: Steel

Finish	Item No.
brass-plated	282.11.510
nickel-plated	282.11.710
bronzed	282.11.110

→ Ø5 mm

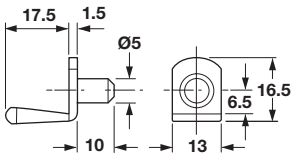

> Angular for glass shelves
> With riveted pin and protective cover
> Material: Steel; Cover: Plastic; Color: brown

Finish	Item No.
brass-plated	282.11.120

→ With M4 Thread

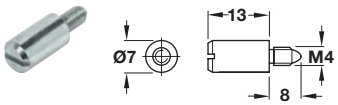

> Screw mounts in expanding sleeve
> Weight capacity: 80 kg (175 lbs.)
> Material: Steel

Finish	Item No.
nickel-plated	282.39.705

→ Swedish-type Shelf Support

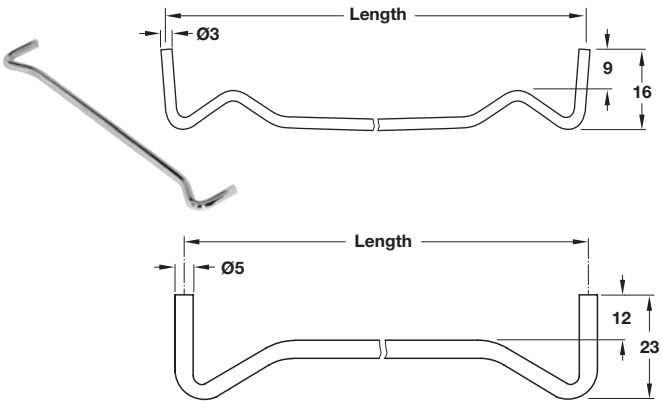

> Plugs into two drilled holes to provide invisible mounting for grooved shelf
> Material: Steel wire; Finish: nickel-plated

Length	Ø3	Ø5
160	282.71.703	282.73.707
224	282.71.712	282.73.716
320	-	282.73.725

→ Expanding Sleeve

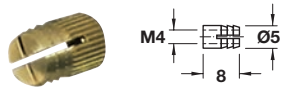

> With M4 internal thread
> For Ø5 mm drill hole
> Material: Brass, bright

	Item No.
	051.45.004

For inserting in drilled holes:

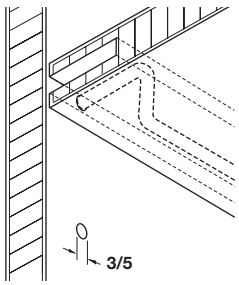

Dimensional data not binding. Dimensions in mm, inches are approximate. We reserve the right to alter specifications without notice.

Supports for Wood Shelves

→ Ø5 mm

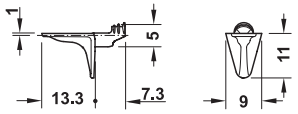

> Patented design assures minimum lowering of shelf under heavy weight
> With three wedged ribs
> Weight capacity: 37.6 kg (83 lbs.)
> Material: Zinc die-cast

Finish	Item No.
nickel-plated	282.24.717
black	282.24.307

→ Ø5 mm

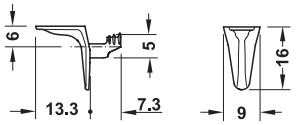

> Patented design assures minimum lowering of shelf under heavy weight
> With three wedged ribs
> Weight capacity: 37.6 kg (83 lbs.)
> Material: Zinc die-cast

Finish	Item No.
nickel-plated	282.24.718

→ Ex-Cellent H® Ø5 mm

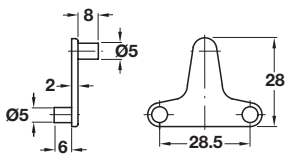

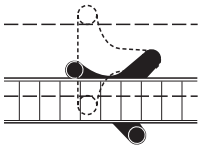

> Shelf clamp support for wood shelves from 16–22 mm
> Material: Zinc die-cast

Finish	Item No.
nickel-plated	282.23.725

→ K-Line Ø5 mm

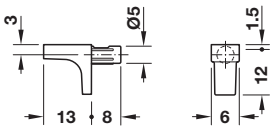

> Material: Zinc die-cast

Finish	Item No.
nickel-plated	282.84.710

→ Ø5 mm

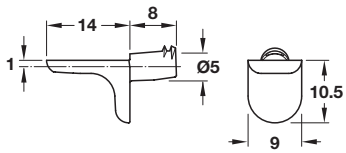

> Ø5 mm
> Wedged ribs with twin grooves
> Weight capacity: 12.5 kg (27.5 lbs.); 50 kg (110 lbs.) with 4 supports
> Material: Zinc die-cast

Finish	Item No.
nickel-plated	282.24.710

→ Ø5 mm

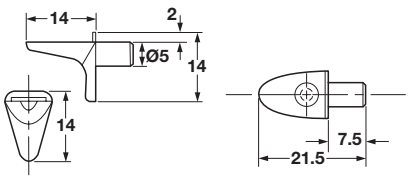

> Material: Zinc die-cast

Finish	Item No.
nickel-plated	282.24.711

Dimensional data not binding. Dimensions in mm, inches are approximate. We reserve the right to alter specifications without notice.

Supports for Wood Shelves

→ Ø5 mm

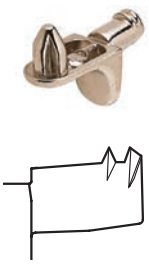

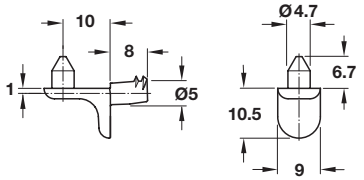

> With 2 wedged ribs and shelf-fixing plug
> Material: Zinc die-cast

Finish	Item No.
nickel-plated	282.24.720

Note
Ribs anchor themselves in the system holes due to pressure from the shelf, which is an important feature for areas prone to earthquakes.

→ Ø5 mm

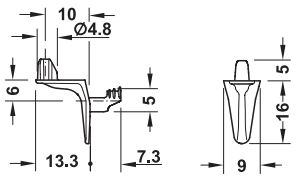

> Patented design assures minimum lowering of shelf under heavy weight
> With three wedged ribs and shelf fixing plug
> Weight capacity: 62.4 kg (137 lbs.)
> Material: Zinc die-cast

Finish	Item No.
nickel-plated	282.24.728

→ K-Line w/ plug Ø5 mm

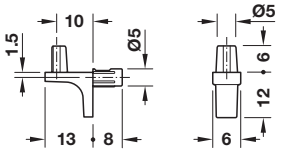

> Material: Zinc die-cast

Finish	Item No.
nickel-plated	282.84.720

→ Ø5 mm

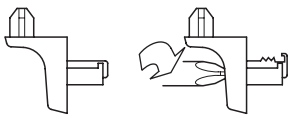

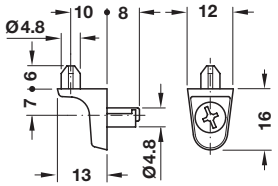

> For insertion and tightening into a drilled hole
> Weight capacity: 75 kg (165 lbs.)
> Material: Zinc alloy

Finish	Item No.
nickel-plated	282.26.715

→ Ø5 mm

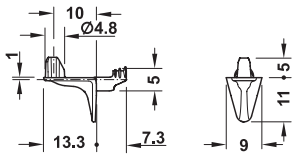

> Patented design assures minimum lowering of shelf under heavy weight
> With three wedged ribs and shelf fixing plug
> Weight capacity: 62.4 kg (137 lbs.)
> Material: Zinc die-cast

Finish	Item No.
nickel-plated	282.24.727

→ Ø5 mm

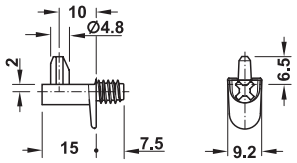

> Threaded pin for tightening into a drilled hole with Phillips #2 driver
> With shelf fixing plug
> Weight capacity: 125 kg (275 lbs.)
> Material: Zinc die-cast

Finish	Item No.
nickel-plated	282.26.706

Dimensional data not binding. Dimensions in mm, inches are approximate. We reserve the right to alter specifications without notice.

Supports

→ Ø1/4"

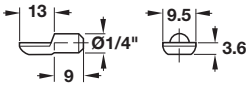

> Spoon-shaped with riveted pin
> Material: Steel

Finish	Item No.
black	282.04.337
nickel-plated	282.04.739
brass-plated	282.04.533

→ Ø1/4"

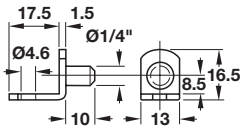

> Angular with riveted pin and securing screw hole
> Material: Steel

Finish	Item No.
brass-plated	282.11.556
nickel-plated	282.11.752
bronzed	282.11.154

→ Ø1/4"

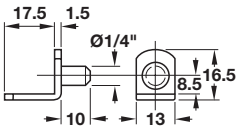

> Angular with riveted pin
> Material: Steel

Finish	Item No.	Packing
brass-plated	282.11.565	2,500 pcs.
nickel-plated	282.11.761	2,500 pcs.
bronzed	282.11.163	1,000 pcs.

→ Ø1/4"

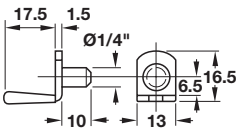

> For glass shelves
> Angular with riveted pin and protective cover
> Material: Steel

Finish	Item No.
brass-plated	282.11.574

Pan head screws pages 12.9-12.10

Dimensional data not binding. Dimensions in mm, inches are approximate. We reserve the right to alter specifications without notice.

Supports

> Weight capacity: 99 kg (220 lbs.)

→ Ø7 mm

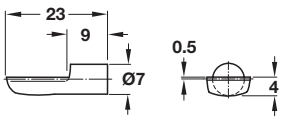

> Inserted into grommet below
> Material: Steel

Finish	Item No.
nickel-plated	282.01.701
brass-plated	282.01.505

→ Grommet

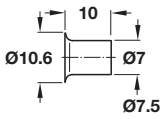

> For Ø7 mm shelf supports above
> Material: Steel

Finish	Item No.
nickel-plated	282.50.704
brass-plated	282.50.508

→ Twist Drill Bit

> For Ø7.5 mm grommet
> Material: Steel

	Item No.
	001.20.061

→ Grommet Insertion Tool

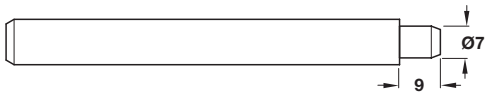

> Ø7.5 mm
> Material: Steel

	Item No.
	006.36.752

Dimensional data not binding. Dimensions in mm, inches are approximate. We reserve the right to alter specifications without notice.

Mullion Shelf Clip

> Multiple adjustment positions ensure proper alignment of shelving
> Two-part assembly allows for easy height adjustment
> Hold-down clips for 16 mm (5/8") and 19 mm (3/4") thick material
> Pin mounted in 5 mm (3/16") hole
> Bumper optional for glass shelf applications
> Material: Polyurethane, transparent

→ Ø5 mm

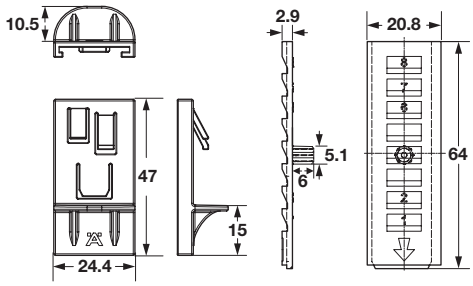

Item No.
282.28.490

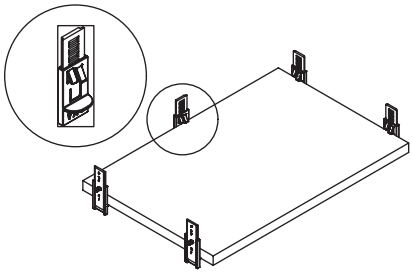

16 mm (5/8") material

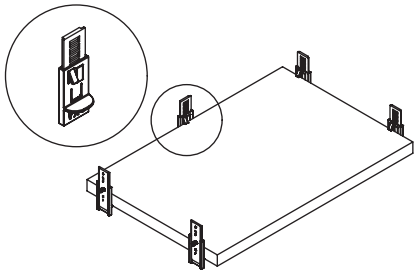

19 mm (3/4") material

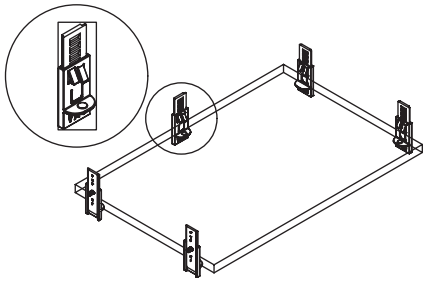

13 mm (1/2") glass

Dimensional data not binding. Dimensions in mm, inches are approximate. We reserve the right to alter specifications without notice.

KINTAI Shelf Support

> Spring-loaded pin for quick installation of shelf
> Easy relocation of shelf
> Material thickness: min. 16 mm
> Weight capacity: 70 kg (154 lbs.) per shelf
> Material: Zinc/Plastic

→ Support Ø5 mm

Color	Item No.
anthracite	282.84.313
white	282.84.713

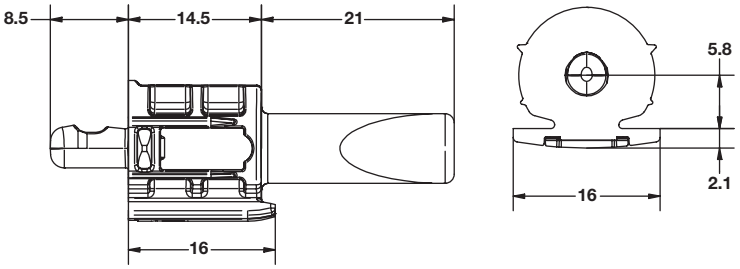

Dimensional data not binding. Dimensions in mm, inches are approximate. We reserve the right to alter specifications without notice.

Kintai Drilling Jig

→ Drilling Jig

> For material thickness 16 mm (5/8") and 18 mm (3/4")
> Material: Aluminum/Steel

Item No.
281.40.712

→ Drill Bit

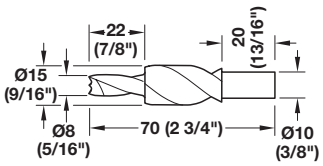

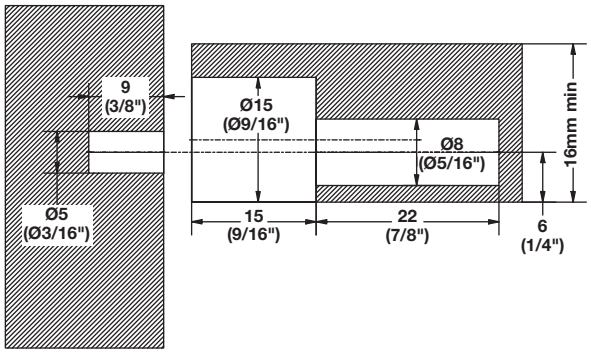

> Ø15 mm (19/32")
> Material: Carbide

Item No.
001.22.911

→ Drill Bit with Accessories

> Material: Steel, Carbide

Item No.
001.22.920

Supplied With
Stepped drill bit
Drill guide
Stop ring

Dimensional data not binding. Dimensions in mm, inches are approximate. We reserve the right to alter specifications without notice.

This page is left blank intentionally.

Dimensional data not binding. Dimensions in mm, inches are approximate. We reserve the right to alter specifications without notice.

Supports for Wood Shelves

→ Ø5 mm

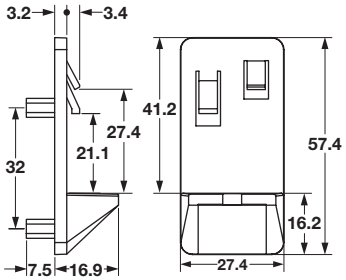

> Double pin Ø5 mm for 32 mm system
> Secures19 mm (3/4") or 25 mm (1") shelves
> Weight capacity with 4 supports: 227 kg (500 lbs.)
> Material: Plastic

Color	Item No.
white	282.47.703
transparent	282.47.403

→ Ø5 mm

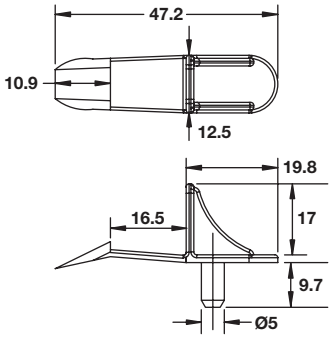

> With spring clip
> For wood shelves 16 mm (5/8") thick
> Material: Plastic

Color	Item No.
white	282.47.730

→ Bumper, optional

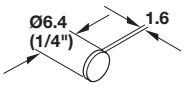

> Material: 100% Polyurethane, transparent

	Item No.
	356.25.445

→ Ø5 mm

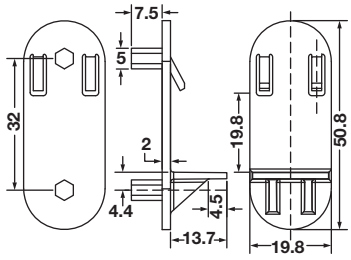

> Double pin Ø5 mm for 32 mm system
> Secures 19 mm (3/4") shelves
> Weight capacity with 4 supports: 227 kg (500 lbs.)
> Material: Plastic, transparent

	Item No.
	282.47.404

→ Ø5 mm

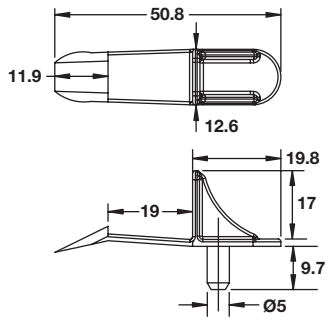

> With spring clip
> For wood shelves 19 mm (3/4") thick
> Material: Plastic

Color	Item No.
white	282.47.740
beige	282.47.140

→ Ø1/4"

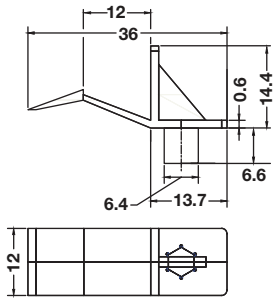

> With grooved plug and spring clip
> For wood shelves 12 mm (1/2") thick
> Material: Plastic

Color	Item No.
beige	282.47.150

Dimensional data not binding. Dimensions in mm, inches are approximate. We reserve the right to alter specifications without notice.

Supports

→ Ø3 mm

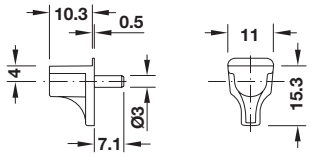

> With steel pin
> Weight capacity: 36 kg (80 lbs.)
> Material: Plastic, transparent; Pin: Steel, galvanized

	Item No.
	282.12.403

→ Ø5 mm

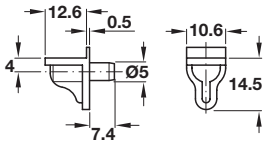

> With steel pin
> Material: Plastic; Pin: Steel, galvanized

Color	Item No.
white	282.12.705
brown	282.12.105
transparent	282.12.405

→ Ø5 mm

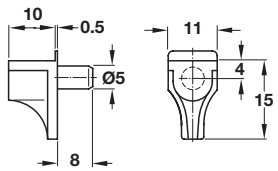

> With steel pin
> Material: Plastic; Pin: Steel, galvanized

Color	Item No.
beige	282.27.509
black	282.27.303

→ Ø5 mm

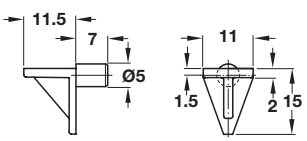

> Weight capacity: 75 kg (165 lbs.)
> Material: Plastic

Color	Item No.
white	283.63.715
beige	283.63.411

→ Ø5 mm

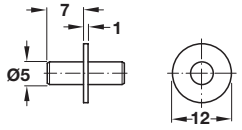

> Material: Plastic

Color	Item No.
white	282.36.704

→ Ø5 mm

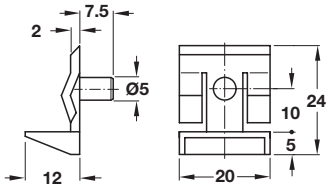

> With spring clip
> Material: Plastic

Color	Item No.
white	282.33.703
beige	282.33.409

→ Ø5 mm

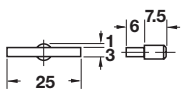

> Provides invisible mounting for grooved shelf
> Material: Plastic

Color	Item No.
white	282.21.703

→ Ø5 mm

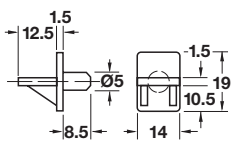

> Angular with collar
> Material: Plastic, transparent

	Item No.
	282.22.013

Dimensional data not binding. Dimensions in mm, inches are approximate. We reserve the right to alter specifications without notice.

Supports for Glass Shelves

→ Ø3 mm

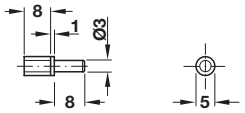

> With cap
> Material: Steel, galvanized; Cap: Plastic, transparent

	Item No.
	281.40.712

→ Ø3 mm

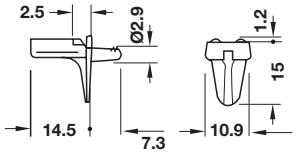

> Patented design assures minimum lowering of shelf under heavy weight
> With three wedged ribs
> Weight capacity: 37.6 kg (83 lbs.)
> Material: Zinc die-cast with transparent rubber pad

Finish	Item No.
nickel-plated	282.25.733

Dimensional data not binding. Dimensions in mm, inches are approximate. We reserve the right to alter specifications without notice.

Supports for Glass Shelves

→ Ø5 mm

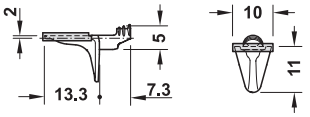

> Patented design assures minimum lowering of shelf under heavy weight
> With three wedged ribs
> Weight capacity: 25 kg (55 lbs.)
> Material: Zinc die-cast with transparent rubber pad

Finish	Item No.
nickel-plated	282.24.733

→ Ø5 mm

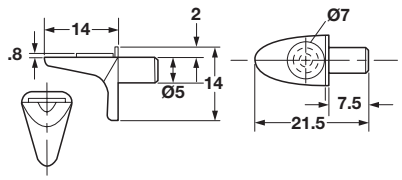

> Material: Zinc die-cast; Pad: Rubber, transparent

Finish	Item No.
nickel-plated	282.24.731

→ Ø5 mm

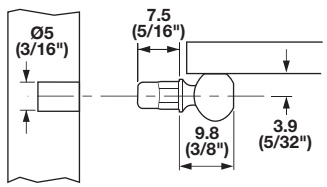

> Material: Zinc alloy; Cap: Plastic/Rubber, transparent

Finish	Item No.
nickel-plated	281.43.700

→ Ø5 mm

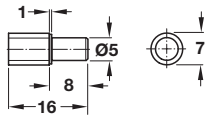

> With cap
> Material: Steel, galvanized; Cap: Plastic, transparent

	Item No.
	281.41.907

→ Ø5 mm

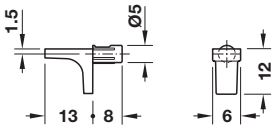

> Material: Zinc die-cast

Finish	Item No.
nickel-plated	282.84.721

→ Ø5 mm

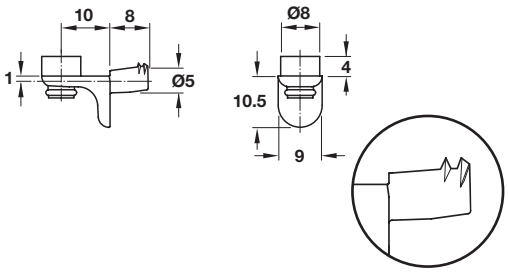

> With 2 wedged ribs
> Material: Zinc die-cast; Glass support: Plastic, transparent

Finish	Item No.
nickel-plated	282.24.730

Note
These ribs anchor themselves in the system holes due to pressure from the shelf. This is an important feature for areas prone to earthquakes.

→ Ex-Cellent H® Ø5 mm

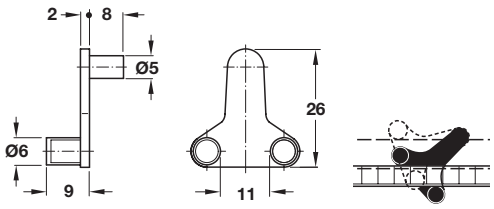

> Shelf clamp support
> For glass thickness: 6–10 mm
> Material: Zinc die-cast; Clamping pins: Plastic-coated

Finish	Item No.
nickel-plated	282.23.716

Dimensional data not binding. Dimensions in mm, inches are approximate. We reserve the right to alter specifications without notice.

Plastic Hold-Downs

→ Ø3 mm

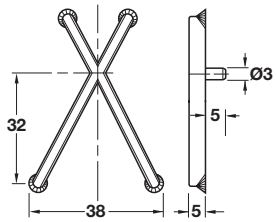

> 32 mm intervals
> Shelf thickness: variable
> Material: Plastic

Color	Item No.
white	282.28.711

→ Ø5 mm

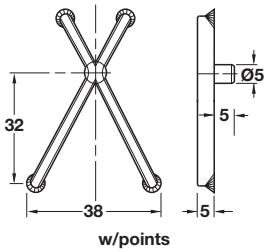

> With points
> 32 mm intervals
> Shelf thickness: variable
> Material: Plastic

Color	Item No.
white	282.28.702

→ Ø5 mm

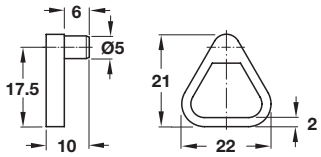

> For insertion in Ø5 mm system holes
> 32 mm intervals
> Shelf thickness: 16 mm
> Material: Plastic

Color	Item No.
white	282.28.727

→ Ø5 mm

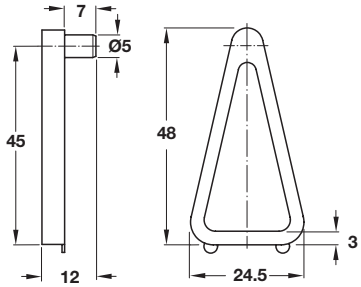

> 32 mm intervals
> Shelf thickness: 19 mm
> Material: Plastic

Color	Item No.
white	282.28.730
beige	282.28.739

Dimensional data not binding. Dimensions in mm, inches are approximate. We reserve the right to alter specifications without notice.

Supports for Glass Shelves

→ Ø5 mm

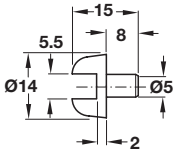

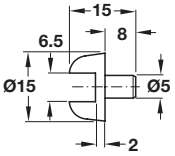

> Material: Plastic, transparent

Glass shelf thickness	Item No.
5	287.28.450
6	287.28.470

→ Ø5 mm

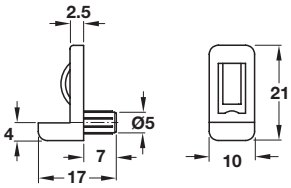

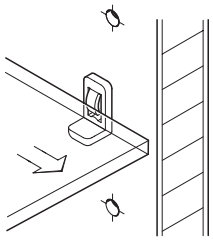

> With safety catch
> For glass shelf thickness max: 6 mm
> Material: Plastic, transparent

	Item No.
	281.42.403

→ Ø5 mm

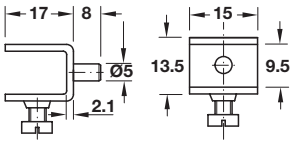

> With set screw
> For glass shelf thickness: 9 mm
> Material: Steel; Set screw: Plastic

Finish	Item No.
nickel-plated	282.20.715

→ Ø5 mm

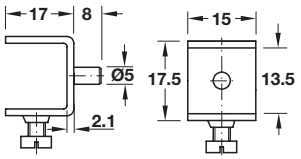

> For glass shelf thickness: 13 mm
> Material: Steel; Set screw: Plastic

Finish	Item No.
nickel-plated	282.20.724

Dimensional data not binding. Dimensions in mm, inches are approximate. We reserve the right to alter specifications without notice.

Supports for Glass Shelves

> Shelf width must be 6–7 mm less than the inside cabinet width

→ Ø5 mm

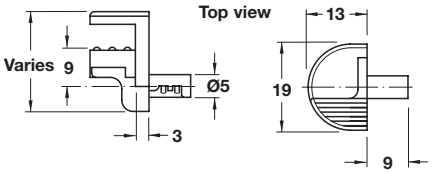

> For insertion and tightening in a drilled hole
> Variable for different glass thickness: 6/8/10 mm
> Material: Zinc Alloy; Glass rest: Plastic, transparent

Finish	Item No.
nickel-plated	282.13.711

→ Ø5 mm

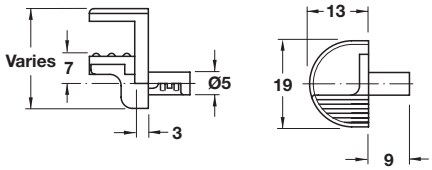

> Variable for different glass thickness: 8/10/12 mm

Finish	Item No.
nickel-plated	282.13.712

Tightening in drilled hole Ø5 mm

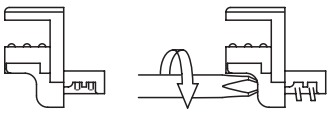

After the shelf support has been tightened in the side panel the glass shelf is put into place…

…then the tightening element is inserted.

Pressing down on the tightening element fixes the glass shelf in position. The shelf support prevents it from tipping as well as being unintentionally lifted and removed.

Dimensional data not binding. Dimensions in mm, inches are approximate. We reserve the right to alter specifications without notice.

PEKI Shelf Support

> Two-part clamping assembly
> Integrated locking screw pin to secure 4–10 mm glass shelf
> 5 mm pin
> Weight capacity: 25 kg (55 lbs.) per shelf
> Material: Zinc/Plastic; Finish: nickel-plated

→ Support

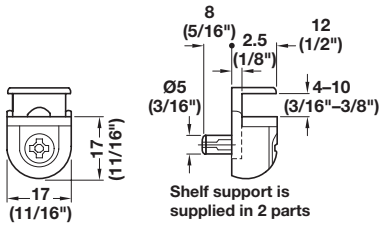

	Item No.
	284.04.611

KUBIC Shelf Support

> Two-part clamping assembly
> Integrated locking clip clicks to secure 4–8 mm glass shelf
> Easy installation and relocation of shelf without tools
> Weight capacity: 25 kg (55 lbs.) per shelf
> Material: Zinc/Plastic; Finish: nickel-plated

→ Support

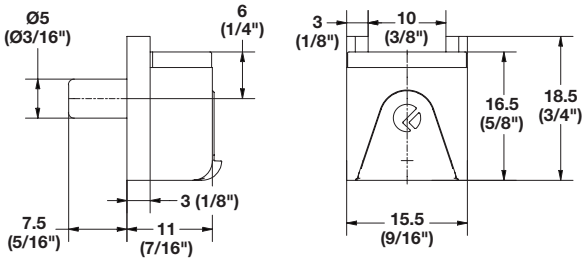

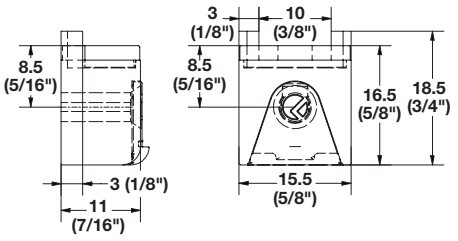

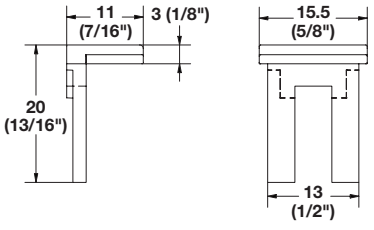

Component	Mounting	Item No.
Lower element	pin	284.04.641
Lower element	screw	284.04.644
Upper element	-	284.04.643

VARIANTA ⌀3 VARIANTA ⌀5

Varianta screws page 12.16

Dimensional data not binding. Dimensions in mm, inches are approximate. We reserve the right to alter specifications without notice.

KRISTAL Shelf Support

> Integrated set screw secures 5-6 mm glass shelf
> Screw mount or 5 mm pin mount versions
> Quick and easy installation and relocation of shelf
> PZ2 driver required to adjust set screw
> Weight capacity: 25 kg (55 lbs.) per shelf
> Material: Zinc; Finish: nickel-plated

→ Support

VARIANTA ⌀3 VARIANTA ⌀5

Mounting	Item No.
Screw	284.04.650
Pin	284.04.654

screw mount

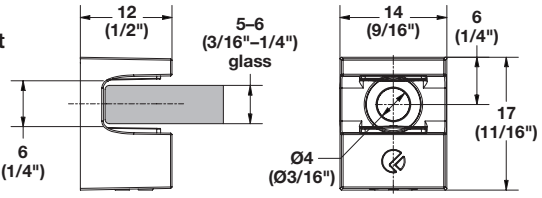

pin mount

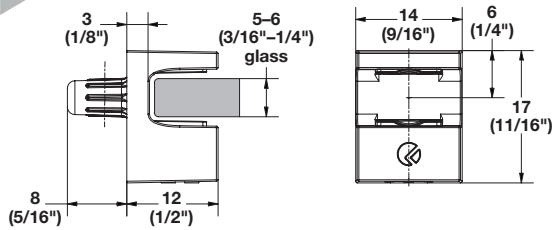

Varianta screws page 12.16

Dimensional data not binding. Dimensions in mm, inches are approximate. We reserve the right to alter specifications without notice.

Shelf Supports

→ Support for Glass Shelves

- > Distance between supports: max. 700 mm (27 9/16")
- > For wall thickness: 1.5 mm (1/16")
- > Weight capacity: up to 85 kg (187 lbs.) per m² by evenly distributed loading on the shelf
- > Material: Support and base: Stainless Steel
  Countersunk screw: Steel, galvanized
  Wall anchor: Plastic
  O-ring: Rubber; Color: black

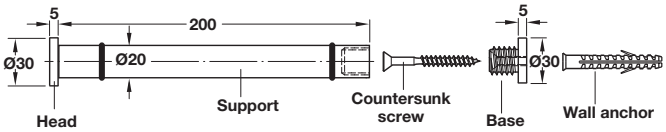

Finish	Item No.
matt, brushed	283.38.020

Supplied With
Support, Ø20 mm; Base
2 O-rings
Countersunk screw M6 x 60 mm
Wall anchor
Assembly instructions

Note
2 sets needed for one shelf.

→ 12 mm Support for Wood Shelves

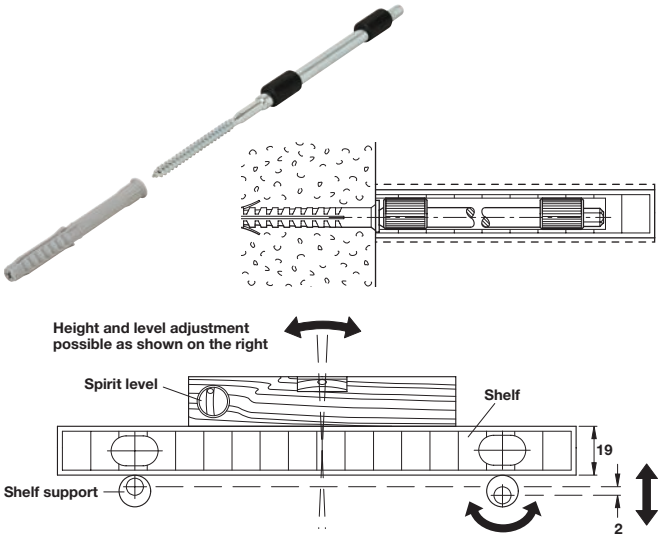

- > For invisible fastening of shelves with a 19 mm (3/4") thickness or greater
- > Adjustment without tools by turning the plastic sleeve
- > The hexagonal end on the shelf support permits installation with 6 mm (1/4") bit using a cordless drill or a 6 mm (1/4") open end or box-end wrench
- > Can be installed directly into masonry walls or woodwork
- > To make adjustments possible, the insertion hole must be laterally elongated, with a slot drilling machine or a chain mill
- > Adjust height and level, set the shelf on the shelf supports mounted in the wall and then adjust by turning the plastic sleeves
- > Press-fit type
- > Material: Steel, galvanized; Sleeves: Plastic/Polyamide

	Item No.
	283.32.014

Supplied With
Support bolt with wood thread
2 Sleeves, pre-mounted
Washer
Fischer structural wall anchor S 8H 80 R

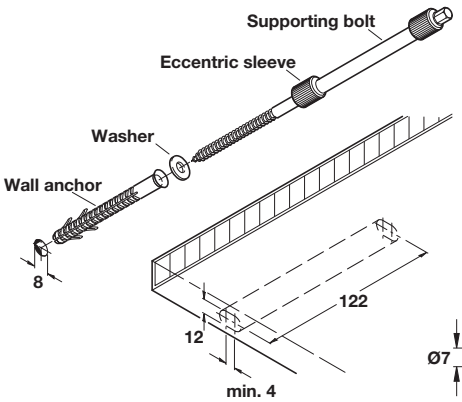

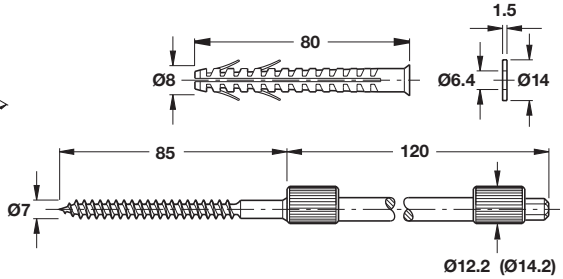

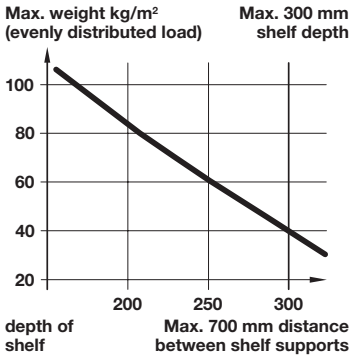

Dimensional data not binding. Dimensions in mm, inches are approximate. We reserve the right to alter specifications without notice.

Shelf Supports

> For concealed installation with screw mount plate and adjustment
> For shelf thickness: ≥24 mm
> Inclination adjustment: Via support bolt
Height adjustment: Via slots in screw mount plate
Side adjustment: Via support bolt
> For screw mounting to support element; for mounting in drilled hole in shelf
> Material: Steel, galvanized; Wall plugs: Plastic

→ Shelf Support with Inclination Adjustment

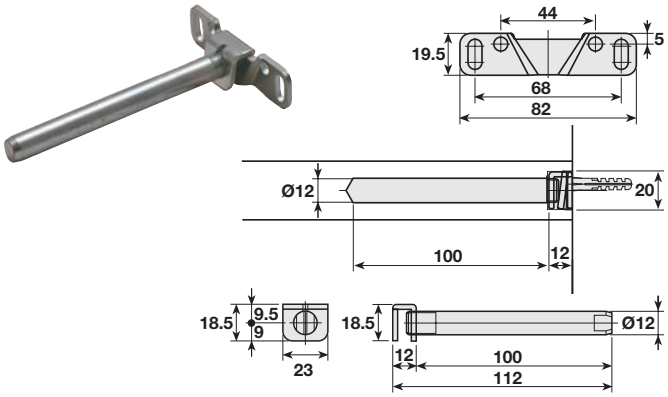

Weight capacity (with two supports on 900 mm shelf, adding one support for every 450 mm increase in length)

Shelf Depth	Max. weight capacity
175	20 kg (44 lbs.)
200	17 kg (37 lbs.)
225	15 kg (33 lbs.)
250	14 kg (31 lbs.)
275	13 kg (29 lbs.)
300	12 kg (26 lbs.)

	Item No.
	283.33.941

Supplied With 4 Plastic wall plugs, 4 Screws

Drilling and routing dimensions in shelf

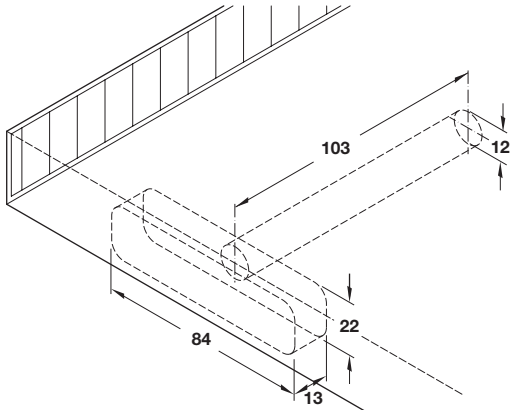

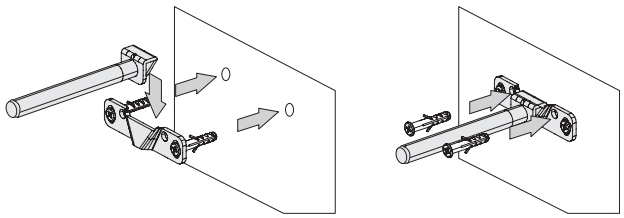

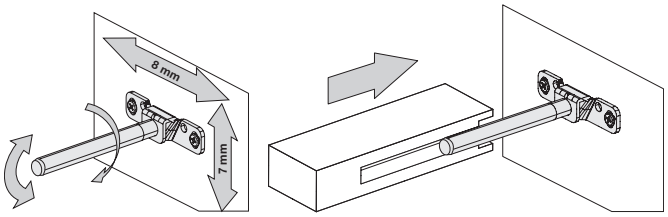

→ Floating Shelf Extrusion Rail

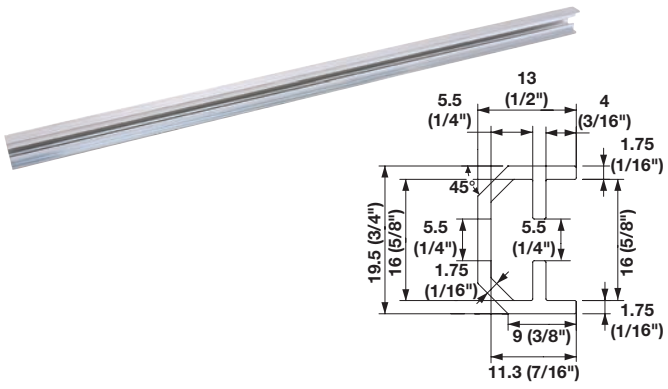

> Ideal for floating shelves combined with shelf support above
> Provides strength and stability over long spans
> Attaches to stud walls with #10 Pan head screws
> Can be cut and drilled
> L x W x H: 2500 x 13 x 19.5 mm
> Material: Aluminum, unfinished

	Item No.
	833.74.894

→ Hardware for Floating Shelf System

> For attaching shelf support to rail
> Material: Steel

	Item No.
	020.92.761

Supplied With
4 – M5 x 12 mm screws
4 – M5 weld nuts

Dimensional data not binding. Dimensions in mm, inches are approximate. We reserve the right to alter specifications without notice.

Shelf Supports

→ TRIADE MINI Shelf Support

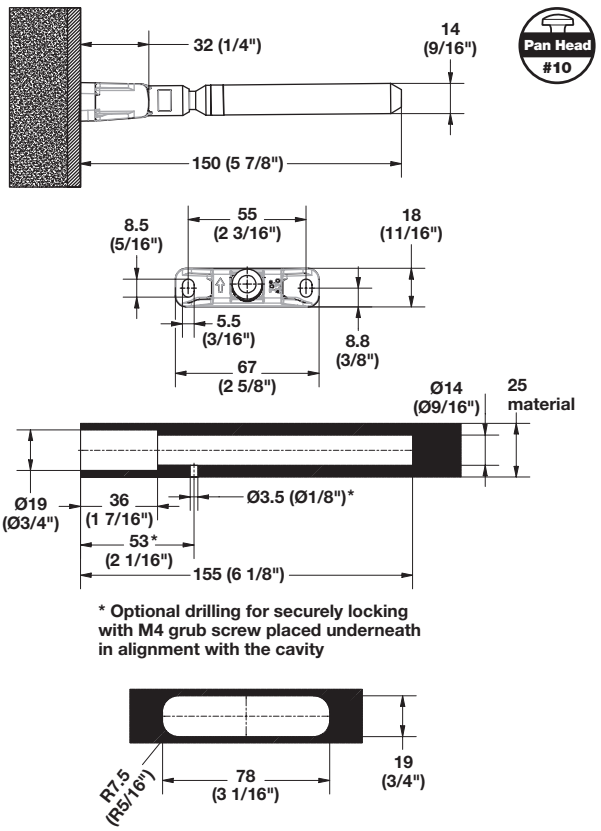

> Concealed mounting for floating shelf
> For material thickness: 25–30 mm
> Inclination adjustment: -6 to 13 mm via 10 mm spanner
Height adjustment: +/- 2.5 mm via slotted plate
Side adjustment: +/- 2.5 mm via locking screw
> Weight capacity: 4.5 kg per support for 165–200 mm shelf depth
> Material: Zinc/Steel

	Item No.
	283.39.011

Pan head screws pages 12.9-12.10

→ TRIADE Shelf Support - Mini Bracket

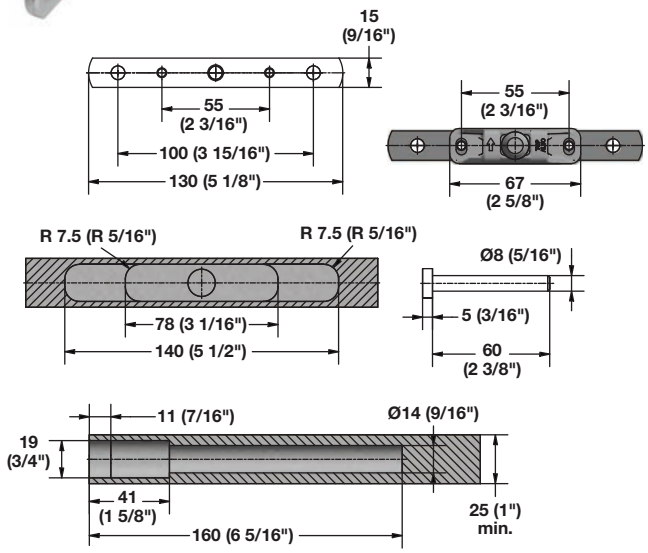

> Provides extra support to TRIADE shelf supports by providing 3 fixing points via Ø8 mm pin and screw fix
> Material: Steel

Finish	Item No.
zinc-plated	283.39.022

Supplied With
M5 x 12 mm screws

Dimensional data not binding. Dimensions in mm, inches are approximate. We reserve the right to alter specifications without notice.

→ TRIADE Shelf Support

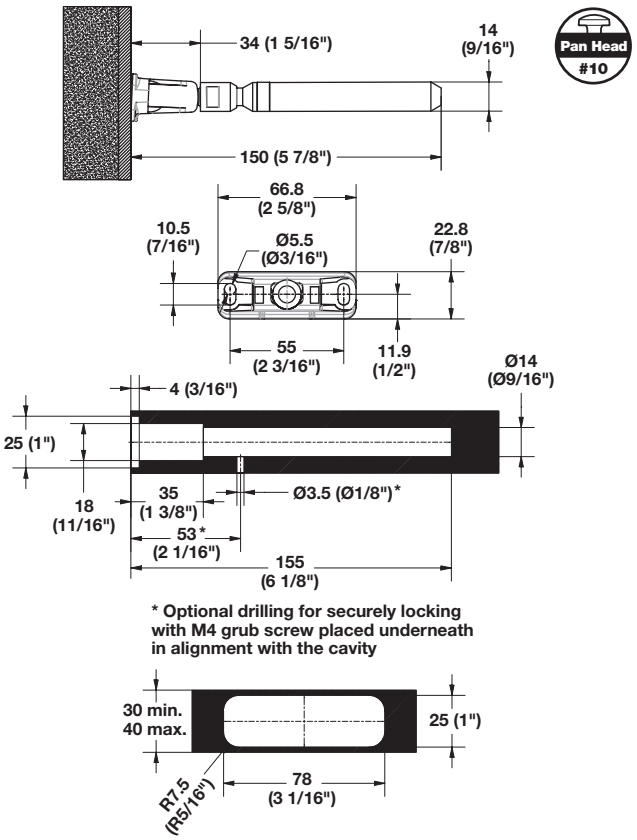

> Concealed mounting for floating shelf
> For material thickness: 30–40 mm
> Inclination adjustment: -6 to 13 mm via 10 mm spanner
Height adjustment: +/- 2.5 mm via slotted plate
Side adjustment: +/- 2.5 mm via locking screw
> Weight capacity: 15 kg per support for 165–300 mm shelf depth
> Material: Zinc/Steel

	Item No.
	283.39.010

→ TRIADE Shelf Support - Bracket

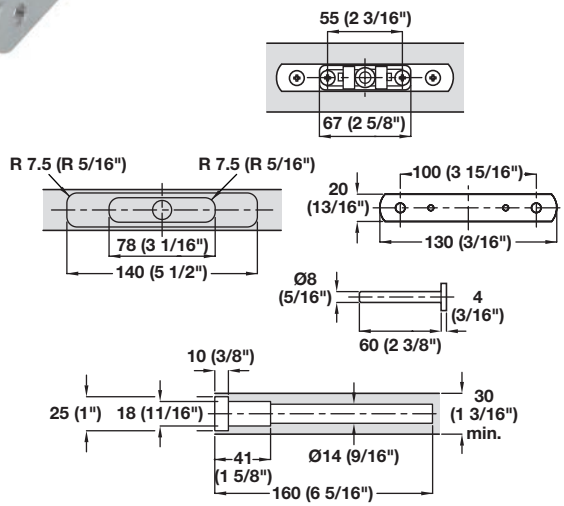

> Provides extra support to TRIADE shelf supports by providing 3 fixing points via Ø8 mm pin and screw fix
> Material: Steel, zinc-plated

Finish	Item No.
zinc-plated	283.39.019

Supplied With
M5 x 12 mm screws

Dimensional data not binding. Dimensions in mm, inches are approximate. We reserve the right to alter specifications without notice.

Shelf Supports

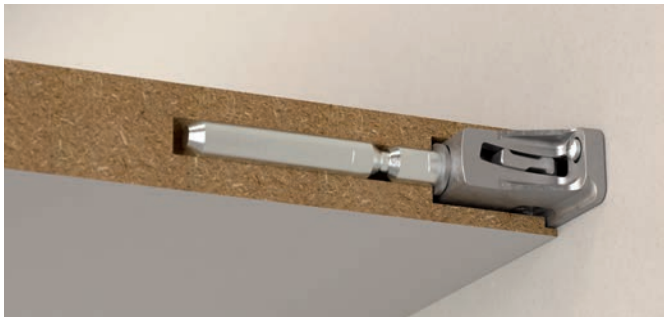

> Concealed mounting for floating shelf
> For material thickness: 40 mm
> Inclination adjustment: -8 to 20 mm via 10 mm spanner
Height adjustment: +/- 2.5 mm via slotted plate
Side adjustment: +/- 2.5 mm via locking screw
> Weight capacity: 20 kg per support for 200–400 mm shelf depth
> Material: Zinc/Steel

→ TRIADE MAXI Shelf Support

Pan Head #10

Item No.
283.39.012

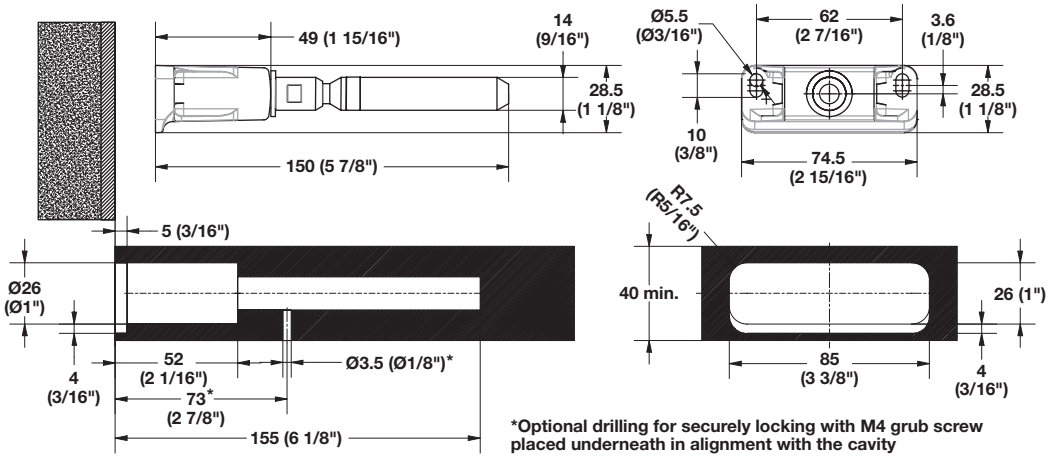

*Optional drilling for securely locking with M4 grub screw placed underneath in alignment with the cavity

→ TRIADE Shelf Support - Maxi Bracket

> Provides extra support to TRIADE shelf supports by providing 3 fixing points via Ø8 mm pin and screw fix
> Material: Steel

Finish	Item No.
zinc-plated	283.39.021

Supplied With
M5 x 12 mm screws

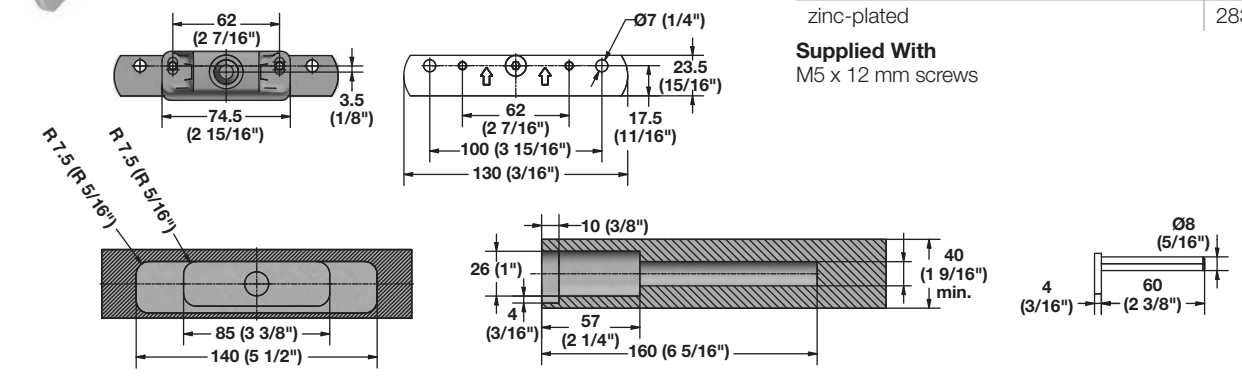

Pan head screws pages 12.9-12.10

Dimensional data not binding. Dimensions in mm, inches are approximate. We reserve the right to alter specifications without notice.

Shelf Supports

> Optional solution for mounting on drywall surfaces with framework
> Use with TRIADE or TRIADE Mini supports
> Can be cut and drilled
> Attaches to framework with #10 Pan head screw
> Material: Aluminum

→ TRIADE/TRIADE Mini Aluminum Profile

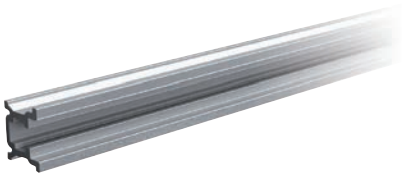

Pan Head #10

Length	Item No.
2400	283.39.030

Drilling for the application with Triade Mini

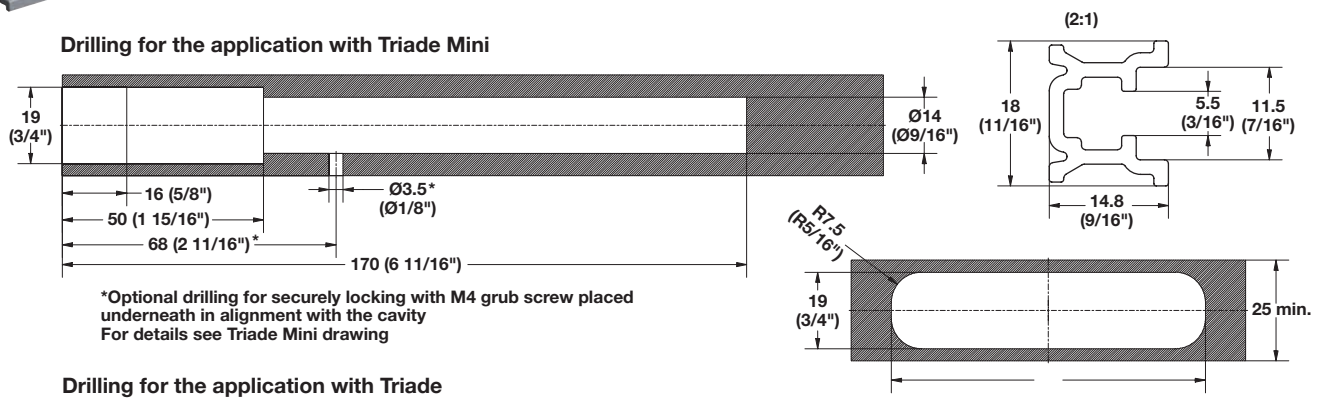

*Optional drilling for securely locking with M4 grub screw placed underneath in alignment with the cavity
For details see Triade Mini drawing

Drilling for the application with Triade

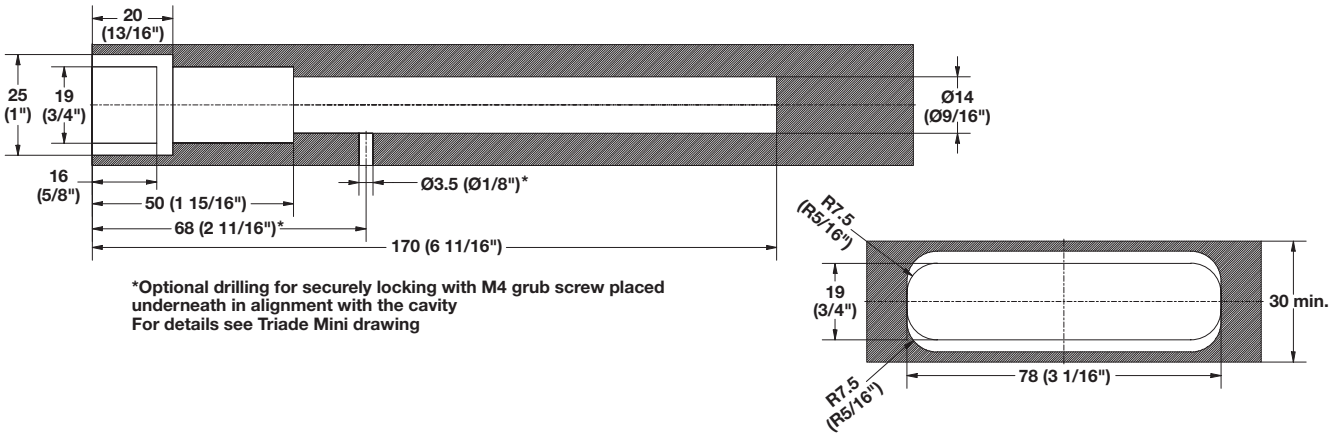

*Optional drilling for securely locking with M4 grub screw placed underneath in alignment with the cavity
For details see Triade Mini drawing

→ Hardware for TRIADE Shelf Supports

> For attaching any TRIADE shelf support to aluminum profile
> Material: Steel

	Item No.
	283.39.032

Supplied With
4 - M5 x 20 mm screws
4 - M5 square nuts

Pan head screws pages 12.9-12.10

Dimensional data not binding. Dimensions in mm, inches are approximate. We reserve the right to alter specifications without notice.

Shelf Supports

> Optional solution for mounting on drywall surfaces with framework
> Use with TRIADE Maxi supports
> Can be cut and drilled
> Attaches to framework with #10 Pan head screw
> Material: Aluminum

→ TRIADE Maxi Aluminum Profile

Pan Head #10

Length	Item No.
2400	283.39.031

Drilling for the application with Triade Maxi

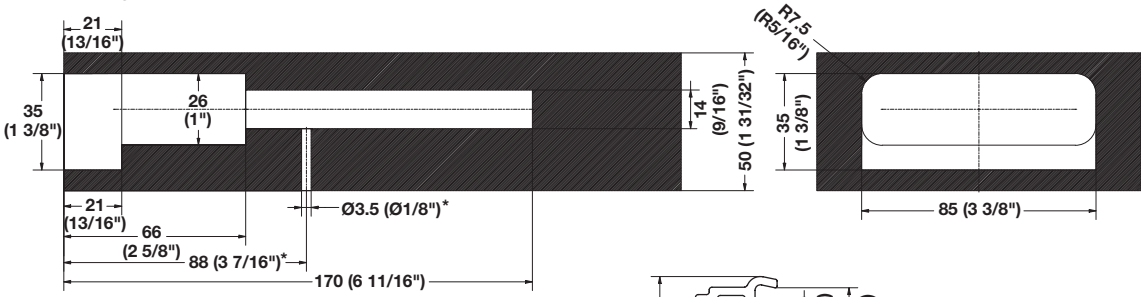

*** Optional drilling for securely locking with M4 grub screw placed underneath in alignment with cavity**
For details see Triade Maxi drawing

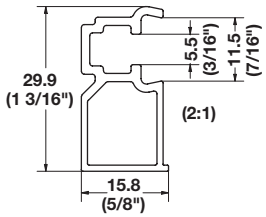

→ Hardware for TRIADE Shelf Supports

> For attaching any TRIADE shelf support to aluminum profile
> Material: Steel

	Item No.
	283.39.032

Supplied With
4 - M5 x 20 mm screws
4 - M5 square nuts

Pan head screws pages 12.9-12.10

Dimensional data not binding. Dimensions in mm, inches are approximate. We reserve the right to alter specifications without notice.

This page is left blank intentionally.

Dimensional data not binding. Dimensions in mm, inches are approximate. We reserve the right to alter specifications without notice.

Shelf Supports

→ TRIADE Drilling Jig Kit

> Complete kit for TRIADE Mini, TRIADE and TRIADE Maxi

	Item No.
	356.12.091

Supplied With
Plastic case
TRIADE drilling jig
14 mm drill bit
Drilling jig for security locking
Template and spacer for TRIADE Mini, TRIADE and TRIADE Maxi
Aluminum profile
3.5 mm drill bit
Instruction book
4 mm hex key
Mounting screws

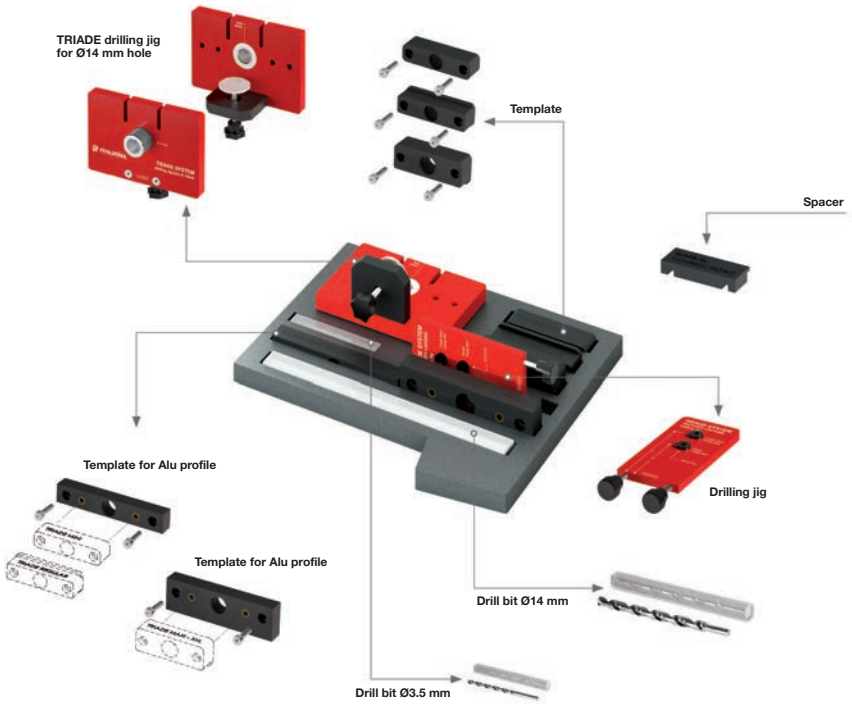

→ TRIADE Drill Bit

> Ø14 mm for shelf drilling
> Material: Steel

	Item No.
	001.41.364

Dimensional data not binding. Dimensions in mm, inches are approximate. We reserve the right to alter specifications without notice.

Shelf Supports

→ Clamping Bracket

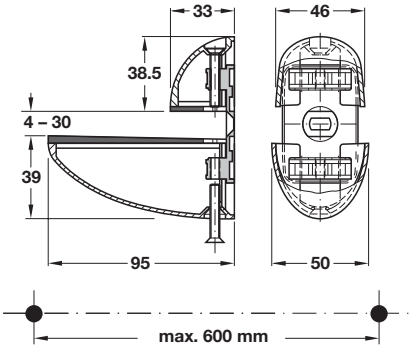

> For 4–30 mm (3/16"–1 3/16") shelf thickness
> Maximum shelf depth: 250 mm (9 7/8")
> Vertically and horizontally adjustable
> Weight capacity: up to 30 kg (66 lbs.) per pair
> Material: Zinc Alloy/Plastic

Finish	Item No.
stainless steel color/black	287.59.000

Supplied With
Mounting hardware

Note
Must order 2 pcs. for each shelf.

Dimensional data not binding. Dimensions in mm, inches are approximate. We reserve the right to alter specifications without notice.

Shelf Supports

→ KALABRONE MINI Glass Shelf Support

Flat Head #7

> Adjustable for 5–10 mm glass thickness
> Wall mounted
> Soft rubber inserts on clamping surfaces
> Weight capacity: 6 kg (13 lbs.) for 150 mm deep shelf
> Material: Zinc

Finish	Item No.
silver, RAL 9006	284.09.930

Supplied With
Clamping screw
Plastic cover
Mounting instructions

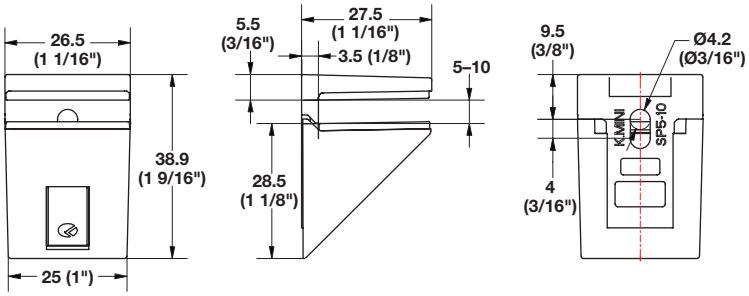

→ KALABRONE Glass Shelf Support

Flat Head #10

> Adjustable for 8–30 mm glass thickness
> Adjustment screw for inclination of shelf
> Wall mounted
> Soft rubber inserts on clamping surfaces
> Weight capacity: 25 kg (55 lbs.) for 320 mm deep shelf
> Material: Zinc

Finish	Item No.
silver, RAL 9006	284.09.980

Supplied With
Clamping screw
Plastic cover
Mounting instructions

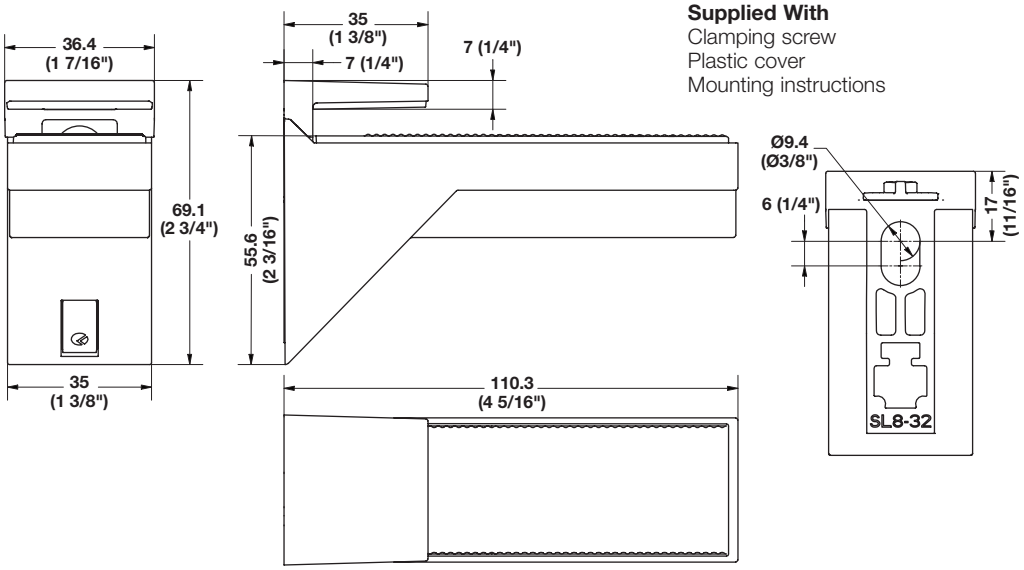

Flat head screws pages 12.7-12.8, 12.10, 12.13

Dimensional data not binding. Dimensions in mm, inches are approximate. We reserve the right to alter specifications without notice.

Centerline Countertop Support Brackets

> Designed to create a floating countertop effect
> Provides support for overhanging granite and stone countertop surfaces
> Made in USA from domestically-sourced steel

→ Front Mounting Bracket

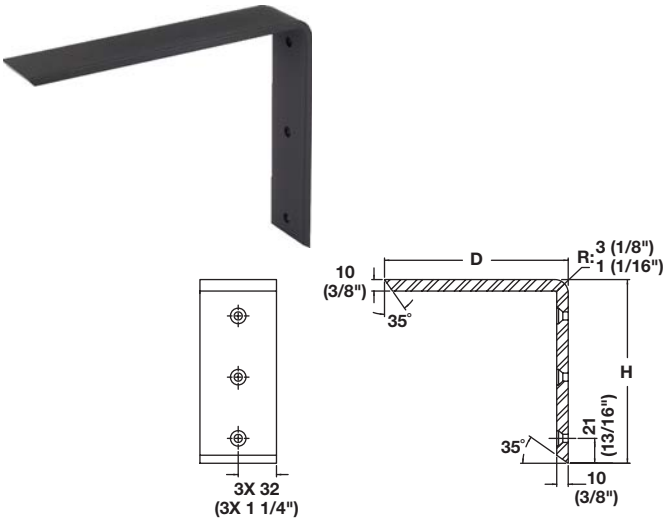

> Surface mount in vertical plate at stud location
> Supports overhang to 406 mm (16")
> Width x Thickness: 63 x 10 mm (2 1/2" x 3/8")
> Material: Steel, powder-coated; Finish: black

D x H	Finish	Item No.
254 x 203 (10" x 8")	black	287.75.332
305 x 254 (12" x 10")	black	287.75.333
356 x 254 (14" x 10")	black	287.75.334
356 x 254 (14" x 10")	white	287.75.734

Supplied With
Mounting screws

→ Front Mounting Plus Bracket

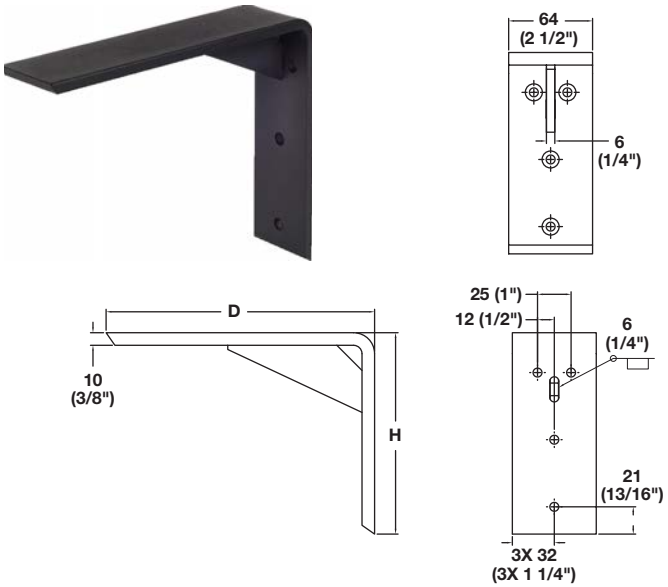

> For floating countertops, vanities, shelves, benches and work surfaces
> Surface mount in vertical plate at stud location
> Low-profile gusset feature for additional support
> Supports overhang to 610 mm (24")
> Width x Thickness: 63 x 10 mm (2 1/2" x 3/8")
> Material: Steel, powder-coated

D x H	Finish	Item No.
356 x 254 (14" x 10")	black	287.75.313
406 x 305 (16" x 12")	black	287.75.314
467 x 305 (18" x 12")	black	287.75.315
508 x 356 (20" x 14")	black	287.75.316
508 x 356 (20" x 14")	white	287.75.716
559 x 356 (22" x 14")	black	287.75.317
610 x 406 (24" x 16")	black	287.75.318

Supplied With
Mounting screws

Dimensional data not binding. Dimensions in mm, inches are approximate. We reserve the right to alter specifications without notice.

Centerline Countertop Support Brackets

> Designed to create a floating countertop effect
> Provides support for overhanging granite and stone countertop surfaces
> Made in USA from domestically-sourced steel

→ Floating Wall Mounting Bracket

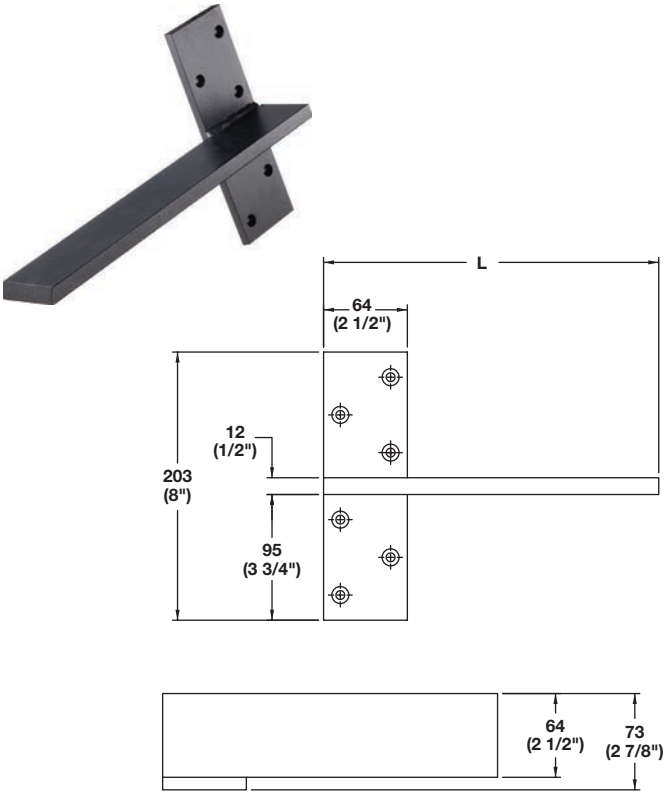

> Designed for floating countertops, vanities, shelves, benches and work surfaces
> Concealed mount to stud behind drywall
> 76 mm (3") of bracket length is hidden inside wall
> Non-handed
> Material: Steel, powder-coated; Finish: black

L	Item No.
305 (12")	287.75.352
356 (14")	287.75.354
457 (18")	287.75.357
508 (20")	287.75.358
559 (22")	287.75.360

Supplied With
Mounting screws

→ Island Bracket

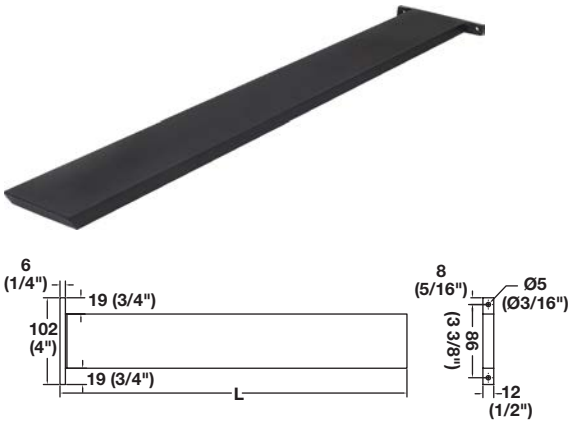

> Designed for cantilever support of island or peninsula countertops
> 102 mm (4") flange for attachment to inside of cabinet face frame
> Notch cabinet for flush fit
> Width x Thickness: 63 x 13 mm (2 1/2" x 1/2")
> Material: Steel, powder-coated; Finish: black

L	Item No.
762 (30")	287.75.380
813 (32")	287.75.382
864 (34")	287.75.384
914 (36")	287.75.386

Supplied With
Mounting screws

Dimensional data not binding. Dimensions in mm, inches are approximate. We reserve the right to alter specifications without notice.

SpeedBrace

- 19 x 38 mm (3/4" x 1 1/2") notching system for fast and easy alignment after installing a level wall cleat
- Two different sized arm lengths, which allow for one brace to be used for two different sized countertops
- Heavy-duty folded steel design for strength
- Two conduit holes, which are designed for running power and communication cables independently
- Countersunk screw holes allow screws to be mounted flush, recommended screw size is a #8 with a countersunk head
- Weight capacity: 454 kg (1,000 lbs.) per pair when mounted on 16" centers
- Material: Steel, epoxy or stainless steel

→ Brackets

Flat Head #8

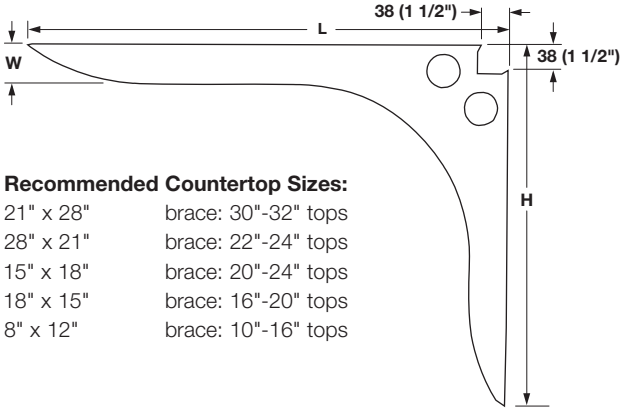

Recommended Countertop Sizes:

21" x 28"	brace: 30"-32" tops
28" x 21"	brace: 22"-24" tops
15" x 18"	brace: 20"-24" tops
18" x 15"	brace: 16"-20" tops
8" x 12"	brace: 10"-16" tops

Finish	L x W x H	Item No.
stainless steel	711 x 45 x 533 (28" x 1 3/4" x 21")	287.77.003
black	711 x 45 x 533 (28" x 1 3/4" x 21")	287.74.307
white	711 x 45 x 533 (28" x 1 3/4" x 21")	287.74.707
black	610 x 45 x 533 (24" x 1 3/4" x 21")	287.74.305
white	610 x 45 x 533 (24" x 1 3/4" x 21")	287.74.705
stainless steel	457 x 38 x 381 (18" x 1 1/2" x 15")	287.77.002
black	457 x 38 x 381 (18" x 1 1/2" x 15")	287.74.304
white	457 x 38 x 381 (18" x 1 1/2" x 15")	287.74.704
stainless steel	305 x 38 x 203 (12" x 1 1/2" x 8")	287.77.001
black	305 x 38 x 203 (12" x 1 1/2" x 8")	287.74.301
white	305 x 38 x 203 (12" x 1 1/2" x 8")	287.74.701

Flat head screws	pages 12.7-12.8, 12.10, 12.13
Snaptoggle® bolts	page 11.106

Dimensional data not binding. Dimensions in mm, inches are approximate. We reserve the right to alter specifications without notice.

SpeedBrace

> Supports overhanging countertops without visible cleats or expensive corbels
> Material: Steel; Finish: black

→ Stealth, 307 mm Long

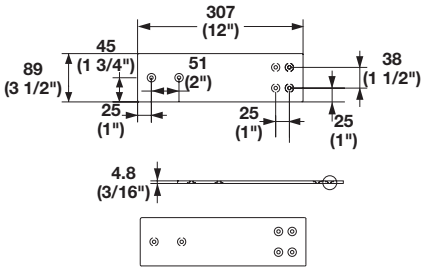

> L × W × H: 307 × 89 × 4.8 mm (12" × 3 1/2" × 3/16")
> Weight capacity: up to 300 lbs./pair

Item No.
287.74.310

→ Stealth, 406 mm Long

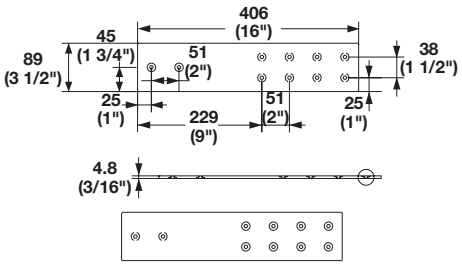

> L × W × H: 406 × 89 × 4.8 mm (16" × 3 1/2" × 3/16")
> Weight capacity: up to 300 lbs./pair

Item No.
287.74.311

→ Stealth, 610 mm Long

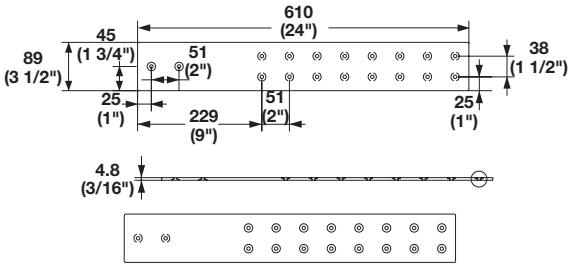

> L × W × H: 610 × 89 × 4.8 mm (24" × 3 1/2" × 3/16")
> Weight capacity: up to 300 lbs./pair

Item No.
287.74.312

→ Stealth, 762 mm Long

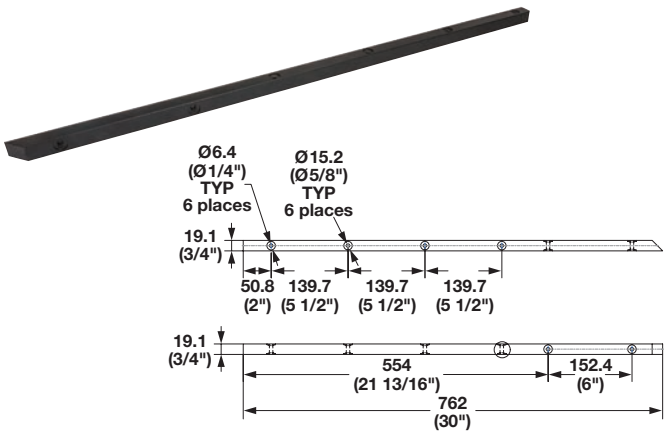

> L × W × H: 762 × 19 × 19 mm (30" × 3/4" × 3/4")
> Weight capacity: up to 1,000 lbs./pair

Item No.
287.74.313

Dimensional data not binding. Dimensions in mm, inches are approximate. We reserve the right to alter specifications without notice.

SpeedBrace

> Supports overhanging countertops without visible cleats or expensive corbels
> Material: Steel; Finish: black

→ Stealth HD, 307 mm Long

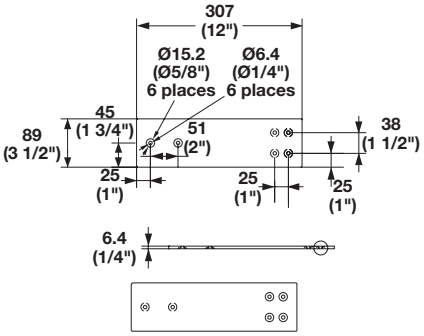

> L × W × H: 307 × 89 × 6.4 mm (12" × 3 1/2" × 1/4")
> Weight capacity: up to 500 lbs./pair

	Item No.
	287.74.315

→ Stealth HD, 406 mm Long

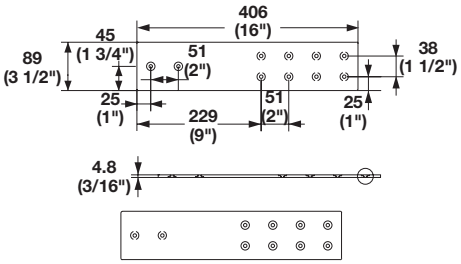

> L × W × H: 406 × 89 × 9.5 mm (16" × 3 1/2" × 3/8")
> Weight capacity: up to 500 lbs./pair

	Item No.
	287.74.342

→ Stealth HD, 610 mm Long

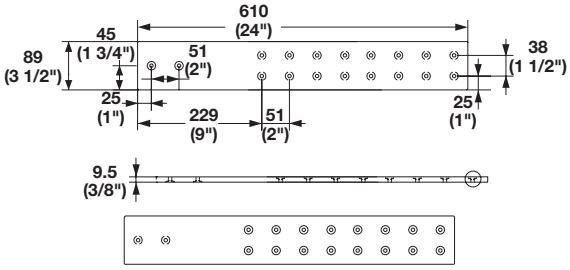

> L × W × H: 610 × 89 × 9.5 mm (24" × 3 1/2" × 3/8")
> Weight capacity: up to 500 lbs./pair

	Item No.
	287.74.317

→ Stealth HD, 762 mm Long

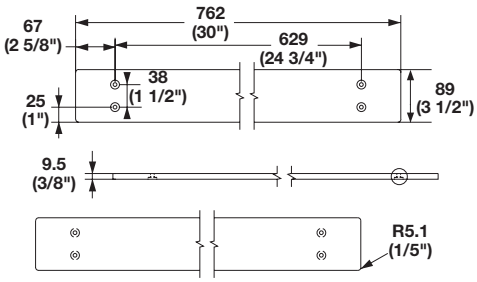

> L × W × H: 762 × 89 × 4.8 mm (30" × 3 1/2" × 3/8")
> Weight capacity: up to 500 lbs./pair

	Item No.
	287.74.318

Dimensional data not binding. Dimensions in mm, inches are approximate. We reserve the right to alter specifications without notice.

SpeedBrace T-Brace

- > Provides support for floating shelves
- > Reversible for LH/RH attachment
- > Width: 19 mm (3/4")
- > Weight capacity: up to 300 lbs./pair
- > Material: Steel; Finish: black

Length	Item No.
279 (11")	287.74.360
406 (16")	287.74.362

Supplied With
Mounting screws
Driver bit

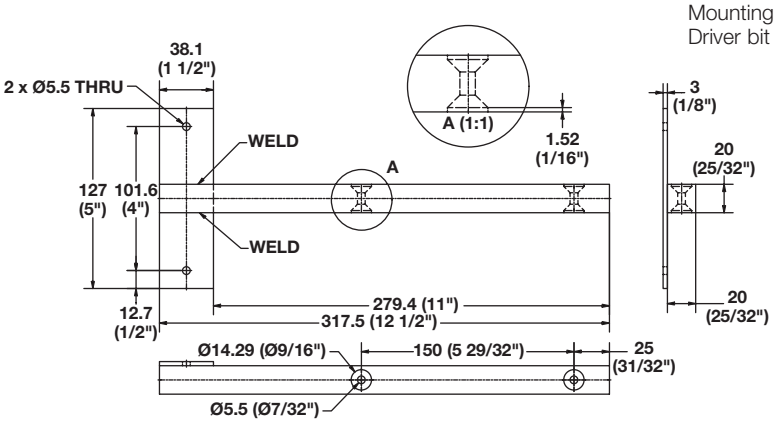

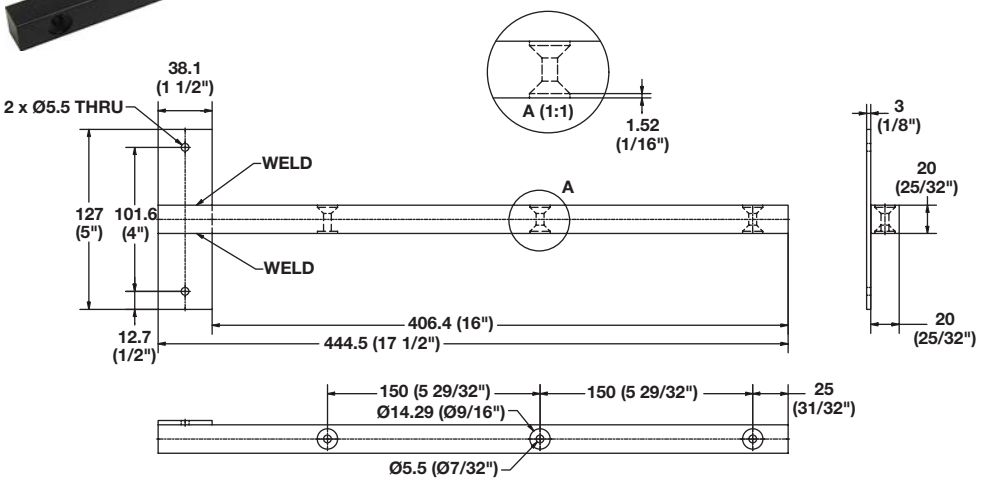

Dimensional data not binding. Dimensions in mm, inches are approximate. We reserve the right to alter specifications without notice.

Rigid Brackets

> Larger sizes feature cut-outs for wire management
> Thickness: 3 mm (1/8")
> Weight capacity: over 454 kg (1,000 lbs.) per pair
> Material: Steel, epoxy-coated or Stainless Steel

→ Brackets

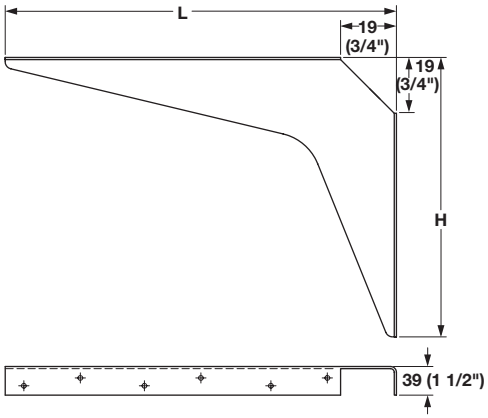

For Item No. 287.74.320, 287.74.720, 287.74.321 and 287.74.721

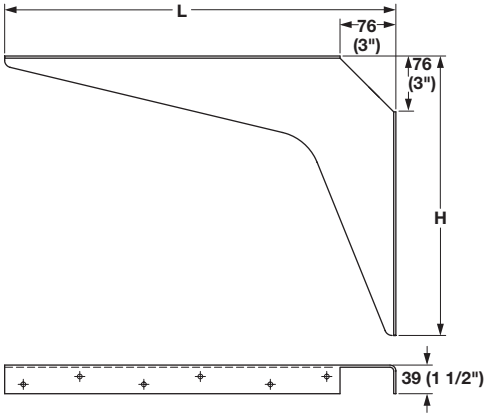

All additional sizes

L x H	black	white	almond	gray
127 x 203 (5" x 8")	287.74.320	287.74.720	-	-
203 x 305 (8" x 12")	287.74.321	287.74.721	-	-
305 x 457 (12" x 18")	287.74.322	287.74.722	-	-
381 x 533 (15" x 21")	287.74.323	287.74.723	287.74.423	287.74.523
457 x 457 (18" x 18")	287.74.324	287.74.724	287.74.424	287.74.524
457 x 610 (18" x 24")	287.74.325	287.74.725	287.74.425	287.74.525
610 x 610 (24" x 24")	287.74.326	287.74.726	-	-
610 x 737 (24" x 29")	287.74.327	287.74.727	-	-

Supplied With
2 pcs. (1 left and 1 right)

Dimensional data not binding. Dimensions in mm, inches are approximate. We reserve the right to alter specifications without notice.

Concealed Design Brackets

> Concealed bracket design for attachment to wall studs
> Mounts with 3/8-16 x 4" carriage bolts
> Thickness: 3 mm and 6 mm (1/8" and 1/4")
> Weight capacity: 454 kg (1,000 lbs.) per pair
> Material: Steel

→ Brackets

L x H	black	white
305 x 305 (12" x 12")	287.74.331	287.74.731
457 x 457 (18" x 18")	287.74.332	287.74.732
609 x 457 (24" x 18")	287.74.333	287.74.733

Supplied With
Mounting hardware

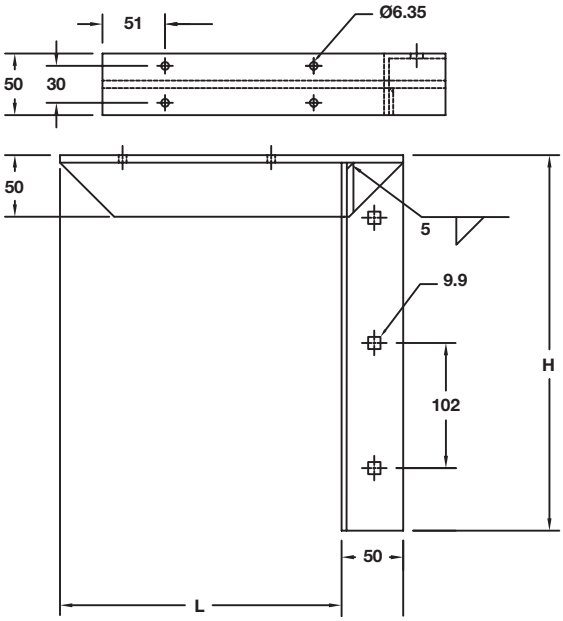

Dimensional data not binding. Dimensions in mm, inches are approximate. We reserve the right to alter specifications without notice.

Countertop Support Brackets

→ Brackets

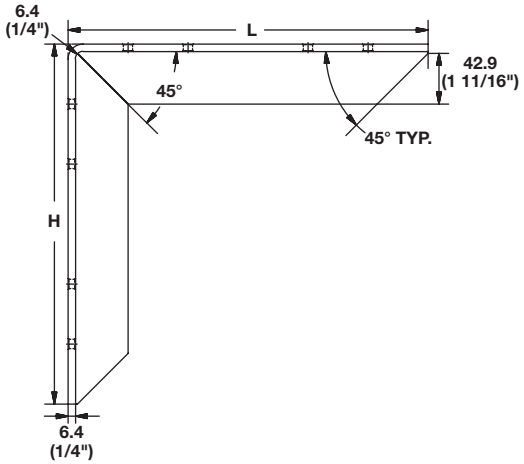

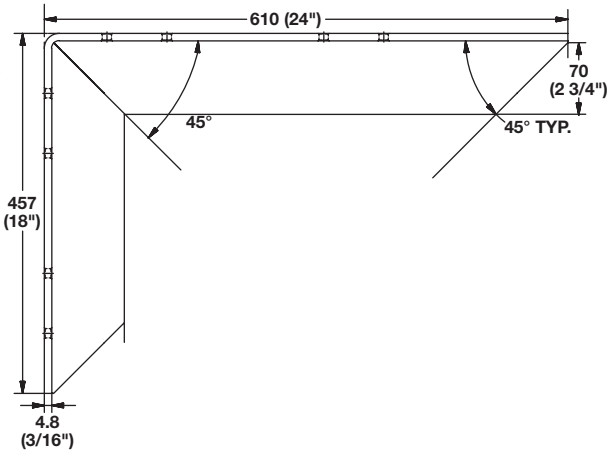

> Practical alternative to full-height, laminated panel supports
> Provides accessibility for vanity applications
> Supports counter depths from 457–762 mm (18"–30")
> Advantages of aluminum:
- Recyclable: more sustainable than steel
- Corrosion resistance: non-ferrous metal
- Lightweight: reduced transportation cost
> Material: Aluminum

L x H	Weight capacity	Thickness	powder white	powder chrome	unfinished
305 x 305 (12" x 12")	295 kg (650 lbs.)/bracket	6 (1/4")	–	–	287.74.050
457 x 457 (18" x 18")	204 kg (450 lbs.)/bracket	6 (1/4")	287.74.751	287.74.451	287.74.051
457 x 610 (18" x 24")	204 kg (450 lbs.)/bracket	4.8 (3/16")	287.74.752	287.74.452	287.74.052

Note
Fastens to single stud, double studs and blocking are not required. Offset hole provides greater stability.
Brackets may also be attached with Snaptoggle® bolts.

Supplied With
2 brackets

Pan head screws	pages 12.9-12.10
Snaptoggle® bolts	page 11.106

Dimensional data not binding. Dimensions in mm, inches are approximate. We reserve the right to alter specifications without notice.

ADA Vanity Bracket

> Designed for installation of lavatory basin with plumbing
> Corrosion-resistant, lightweight aluminum construction
> 19 mm (3/4") wood strips for mounting fascia panels
> Weight capacity: 204 kg (450 lbs.)
> L X H: 559 x 457 mm (22" x 18")
> Material: Aluminum, unfinished

→ Bracket

	Item No.
	287.74.053

Note
Using double studs or blocking provides greater stability.

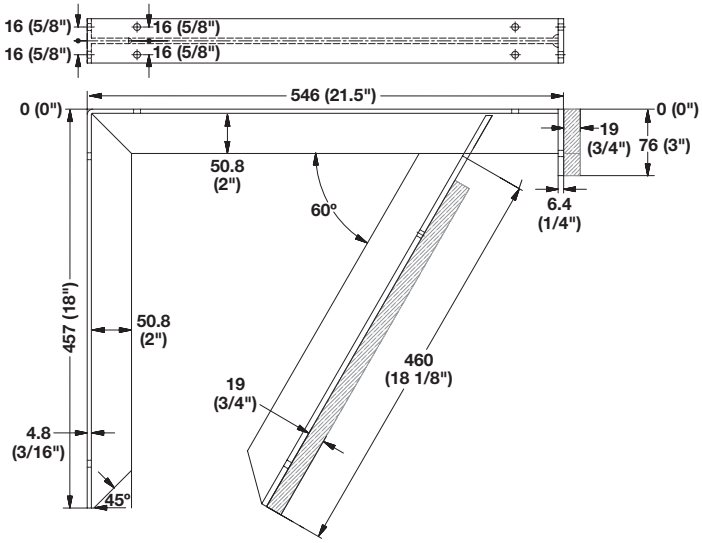

Pan head screws pages 12.9-12.10

Dimensional data not binding. Dimensions in mm, inches are approximate. We reserve the right to alter specifications without notice.

Brackets

Note
Weight capacities are approximate figures can change depending on application. These figures were determined by static testing distributing the weight evenly over the surface, but not extending the length of the bracket.

→ Shelf Support Bracket

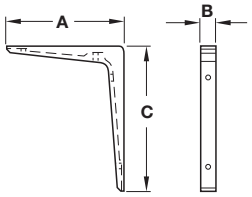

> Material: Aluminum, lacquered; Color: white

A	C	B	Screw hole	Weight capacity	Item No.
150	200	20	5.0	120 kg (265 lbs.)	287.35.741
200	250	24	5.0	130 kg (285 lbs.)	287.35.750
200	300	26	6.0	150 kg (330 lbs.)	287.35.759

→ Hebgo Bracket

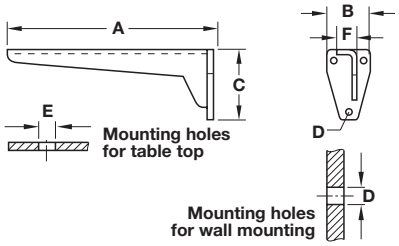

> Material: Steel

Weight capacity per pair	A	B	C	D	E	F	gray primed	galvanized
150 kg (330 lbs.)	200	46	80	8	5	20	287.44.416	-
	240	46	80	8	5	20	287.44.425	-
	280	53	100	8	6	22	287.44.434	-
	330	53	100	8	6	22	287.44.443	287.44.943
	380	65	130	10	6	25	287.44.452	287.44.952
	480	65	130	10	6	25	287.44.461	287.44.961
	580	82	170	10	6	30	287.44.470	287.44.970
	680	82	170	10	6	30	287.44.489	-
500 kg (1100 lbs.)	380	80	180	12	6	32	287.45.459	-
	480	80	180	12	6	32	287.45.468	287.45.968
	580	100	220	15	6	40	287.45.477	-
	680	100	220	15	6	40	287.45.486	-
	780	100	220	15	6	40	287.45.495	-

→ Performance Bracket

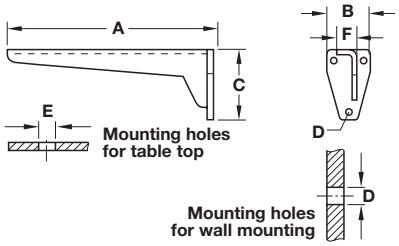

> Heavy duty design
> Made in the USA
> Weight capacity per pair: 150 kg (330 lbs.)
> Material: Steel; Finish: gray primed

A	B	C	D	E	F	Item No.
380	65	130	8	5	25	287.73.501
480	65	130	8	5	25	287.73.502
580	82	170	8	5	30	287.73.503

Dimensional data not binding. Dimensions in mm, inches are approximate. We reserve the right to alter specifications without notice.

Brackets

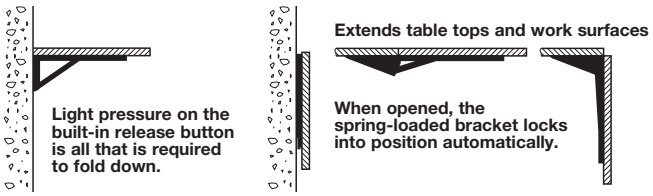

Note
Weight capacities are approximate figures and can change depending on application. These figures were determined by static testing distributing the weight evenly over the surface, but not extending the length of the bracket.

→ Bracket

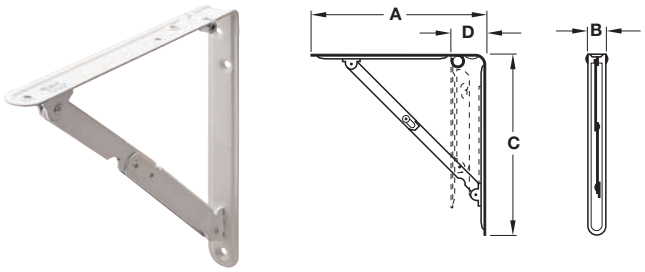

> Folding with locking devices
> Screw hole: 5 mm
> Maximum distance between brackets: 600 mm
> Material: Steel, enameled; Finish: white

A	C	D	B	Weight capacity per pair	Item No.
210	200	40	24	30 kg (66 lbs.)	287.40.740
320	310	45	30	50 kg (110 lbs.)	287.40.741
430	410	55	30	60 kg (132 kbs.)	287.40.742

→ Hinged Spring Bracket

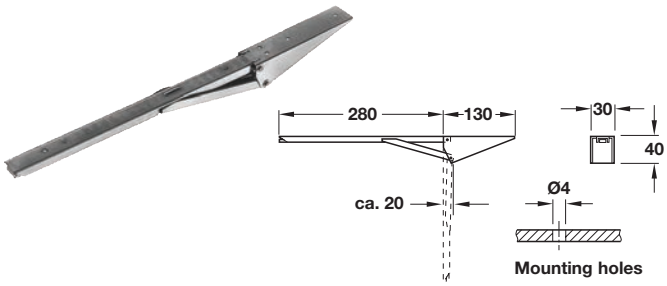

> Screw mounted, for horizontal installation
> Weight capacity: 30 kg (66 lbs.) per pair
> Material: Steel

Finish	Item No.
yellow chromated	287.41.951

→ Hinged Spring Bracket

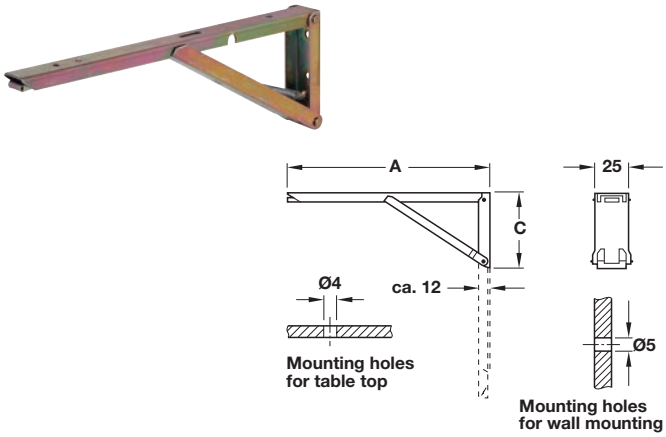

> Screw mounted, for vertical installation
> Weight capacity: 40 kg (88 lbs.) per pair
> Material: Steel; Finish: yellow chromated

A	C	Item No.
250	85	287.41.906
380	120	287.41.915

→ Bracket

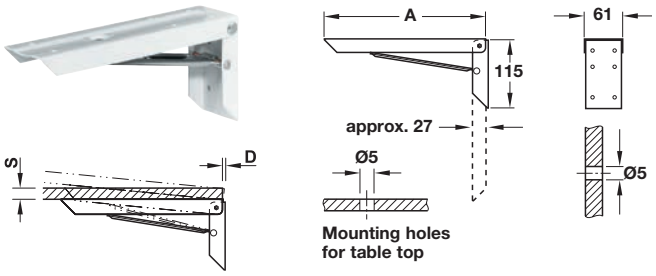

S mm	≤10	≤15	≤20	≤25	≤30
D mm	≥2.2	≥2.6	≥3.1	≥3.6	≥4.1

> Folding with locking device
> Weight capacity: 100 kg (220 lbs.) per pair
> Material: Steel; Finish: white lacquer; Support: galvanized

A	Item No.
200	287.54.721
250	287.54.726
300	287.54.731

Dimensional data not binding. Dimensions in mm, inches are approximate. We reserve the right to alter specifications without notice.

KV Brackets

→ 208 Series Ultimate L-Brackets, Super Duty

Pan Head #10

Pan Head #8

> Weight capacity: up to 544 kg (1,200 lbs.)/pair*
> For 305–610 mm (12"–24") deep shelving
> Material: Steel

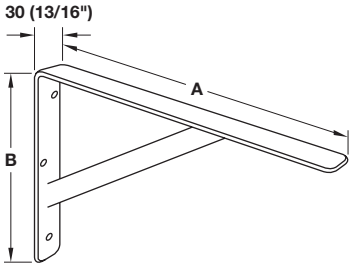

Size	Finish	A	B	KV Model No.	Item No.
300 (12")	black	300 (12")	203 (8")	208 BLK 300	287.55.361
300 (12")	white	300 (12")	203 (8")	208 WH 300	287.55.761
406 (16")	black	400 (15 3/4")	254 (10")	208 BLK 400	287.55.362
406 (16")	white	400 (15 3/4")	254 (10")	208 WH 400	287.55.762
508 (20")	black	500 (19 11/16")	333 (13 1/8")	208 BLK 500	287.55.363
508 (20")	white	500 (19 11/16")	333 (13 1/8")	208 WH 500	287.55.763
559 (22")	black	550 (21 5/8")	361 (14 3/16")	208 BLK 550	287.55.364
559 (22")	white	550 (21 5/8")	361 (14 3/16")	208 WH 550	287.55.764

***Note**
Proper installation and mounting required. Tested to meet or exceed ANSI/BHMA 156.9-2003 performance standards. Weight limits are based on standards mounted on 16" centers and are intended for use as general guidelines only. No warranty, expressed or implied, supplied by Häfele.

KV Brackets

→ 206 Series Folding Bracket, Heavy Duty

Pan Head #10

Pan Head #8

> For 300–610 mm (12"–24") deep shelving
> Adjustable to 4 positions: 90°, 80°, 70° and 0° (closed position)
> Spring-loaded release lever allows work surface to be quickly and easily folded out of the way when no longer needed
> One-hand adjustment makes bracket easy to open, close and adjust
> Material: Steel

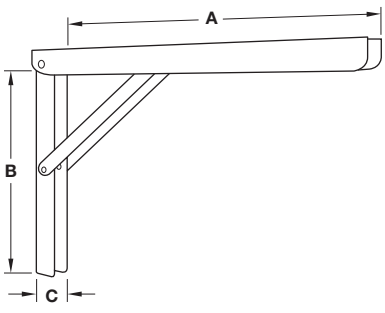

Size	Weight capacity	Gauge	A	B	C	KV Model No.	Item No.
300 (12")	340 kg (750 lbs.)/pair*	16	300 (12")	200 (7 7/8")	15 (9/16")	206 WH 12	287.31.741
406 (16")	399 kg (880 lbs.)/pair*	14	400 (15 3/4")	270 (10 5/8")	20 (13/16")	206 WH 16	287.31.742

Pan head screws pages 12.9-12.10

Dimensional data not binding. Dimensions in mm, inches are approximate. We reserve the right to alter specifications without notice.

Folding Brackets

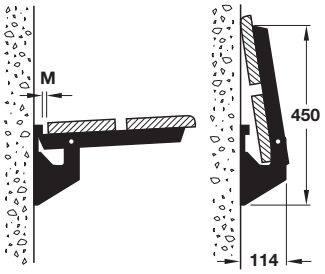

When folded up the bracket requires the space specified at left. It is pre-drilled for the seat, which can be up to 40 mm thick.

Seat thickness	Minimum gap M
25 mm	17 mm
30 mm	17 mm
35 mm	22 mm
40 mm	28 mm

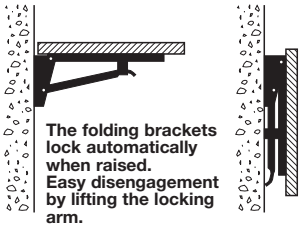

The folding brackets lock automatically when raised. Easy disengagement by lifting the locking arm.

Note
Weight capacities are approximate figures and can change depending on application. These figures were determined by static testing distributing the weight evenly over the surface, but not extending the length of the bracket.

→ Hebgo Folding Bench Bracket

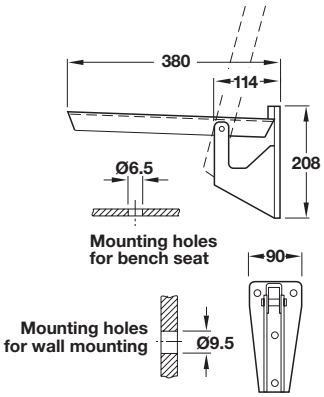

> Heavy duty model for outdoor use
> Weight capacity: 500 kg (1100 lbs.) per pair
> Material: Steel, galvanized

Item No.
287.47.917

Note
Maximum distance between 2 shelf supports is 700 mm (27 9/16").

→ Hebgo Table Bracket

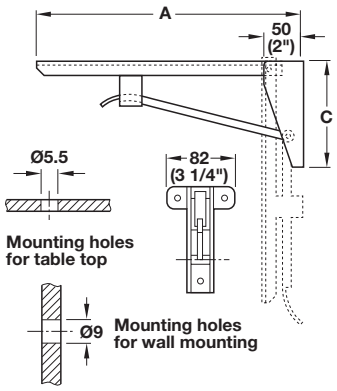

> Light duty
> Weight capacity: 150 kg (330 lbs.) per pair
> Material: Steel; Color: gray primed

A	C	Item No.
330	134	287.42.403
380	134	287.42.412
480	152	287.42.421
580	178	287.42.430
680	178	287.42.449

→ Hebgo Table Bracket

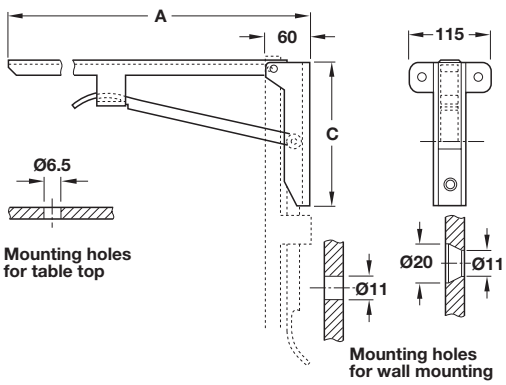

> Heavy duty
> Weight capacity: 500 kg (1100 lbs.) per pair
> Material: Steel; Color: gray primed

A	C	Item No.
420	180	287.43.400
480	180	287.43.419
580	220	287.43.428
680	220	287.43.437
780	220	287.43.446

Pan head screws pages 12.9-12.10

Dimensional data not binding. Dimensions in mm, inches are approximate. We reserve the right to alter specifications without notice.

Folding Brackets

Note
Weight capacities are approximate figures and can change depending on application. These figures were determined by static testing distributing the weight evenly over the surface, but not extending the length of the bracket.

→ Tikla Table Bracket

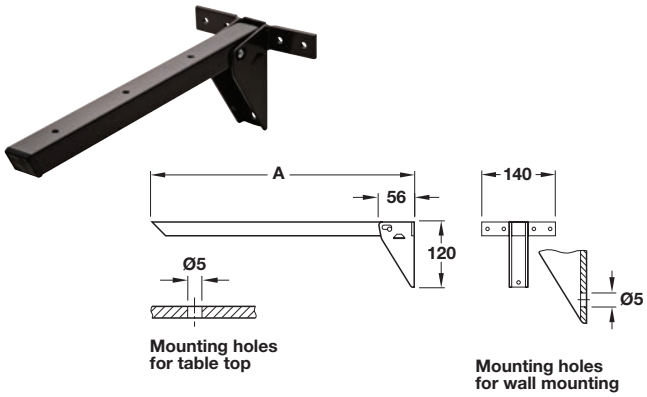

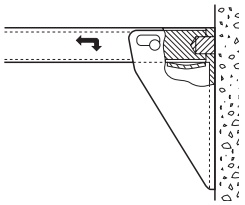

To fold down: lift and pull out the supporting arm.
To raise: lift and press the supporting arm down on the locking pin.

> Medium duty
> Weight capacity: 100 kg (220 lbs.) per pair
> Material: Steel; Color: brown lacquer

A	Item No.
360	287.48.110
460	287.48.129
560	287.48.138
660	287.48.147

→ Folding Bracket

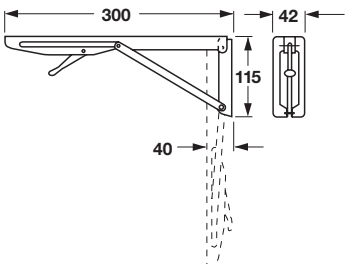

To fold, lift slightly (to release the safety device). Press the release lever and the bracket will fold down.

For table top

For wall mounting

> With locking device in supporting arm
> Weight capacity: 50 kg (110 lbs.)
> Material: Steel, bright galvanized

Finish	Item No.
black	287.49.322
white	287.49.724

Pan head screws pages 12.9-12.10

Dimensional data not binding. Dimensions in mm, inches are approximate. We reserve the right to alter specifications without notice.

12

HÄFELE

CONSUMABLES AND TOOLS

HÄFELE

Screws

Guide 12.4–12.6
Zip-R Screws 12.7–12.9
Spax® Premium Screws 12.10
Cabinet Installation Screws 12.11
Special Application Screws 12.12–12.15
Varianta Screws 12.16
Screws for Decorative Hardware 12.17–12.18
Wall Anchors 12.19
Cover Caps 12.20–12.23
Flushmount Drilling System 12.23
Famowood® 12.24
Senco®
Nails, Pins and Staples 12.25–12.33

Abrasives

Aluminum Oxide Paper Discs 12.34–12.35
Sioux Pneumatic Sanders 12.36
Aluminum Oxide FilmBac Discs 12.37–12.38
Premier Red Discs 12.39
Silicon Carbide Discs 12.40
Fabramesh and Fabrafoam Discs and Pads 12.41
Portable Belts 12.42–12.43
Aluminum Oxide Wide Belts 12.43
Aluminum Oxide Dri-Lube Sheet Rolls 12.44
Aluminum Oxide Dri-Lube Sheets 12.45
Silicon Carbide Dri-Lube Sheets 12.46
Sponge Hand Pads 12.46
Sanding Sponges 12.47
FilmBac Gold Sanding Pad Roll 12.47

Adhesives

Häfele Premium Grade Adhesive 12.48
Titebond®
Original Wood Glue 12.49
Premium Wood Glue 12.49
Doweling/Doweling LV Glue 12.50
Extend Wood Glue 12.51
Ultimate Wood Glue 12.52
Fluorescent Wood Glue 12.52
Dark Wood Glue 12.53
White Glue 12.53
No Run, No Drip Glue 12.54
Polyurethane Glue 12.54
Melamine Glue 12.55
Liquid Hide Glue 12.55
Instant Bond Glue 12.56
Construction Adhesive 12.57
Weathermaster Sealant 12.57
Silicone Sealant 12.57
Painter's Plus Caulk 12.58
Cold Press Veneer 12.59
UA 920 Sealant 12.59
GreenChoice Construction Adhesive 12.60
Glue Bottles/Accessories 12.61

Safety Equipment

Gloves 12.62–12.65
Coveralls, Vests, Back Support and Cooling Towel 12.66
Respirator and Dust Masks 12.67
Ear Plugs 12.68
Shoe Covers 12.68
Eye Wash 12.68
First Aid Kit 12.68
Glasses and Goggles 12.69–12.70

Dimensional data not binding. Dimensions in mm, inches are approximate. We reserve the right to alter specifications without notice.

Drilling Jigs

Euro Bit Self-Centering Tool 12.71
Jigs for Puck Lights 12.72
Häfele Drilling Jig 12.72
Cabinet Hardware Jigs 12.73–12.74

Measuring Materials

3rd and Little Hand 12.75–12.76
Laser Line Level, Lino and Tripod 12.77
Leica Lasers 12.78
Tape Measures 12.79

Support Materials

Clip Strip/Winbag 12.80
Systainer® Tool Boxes 12.81–12.85
Batteries 12.86

Drill Bits and Hand Tools

Drill Bits 12.87
Screwdrivers 12.88–12.89
Wrench Set 12.90
Laminate Trimming Bits/Bit Sets 12.90
Machine Bits/Bit Sets 12.91
Brad Point and Twist Bits 12.92
Speciality Bits 12.93
Calculator 12.94
Speed Clip 12.94
Pro-Hold 12.94
AccuScriberPro/Parallel Scriber 12.94
Electric Trim Ring 12.95
Utility Knife, Trimmers and Scissors 12.95
FastBreak 12.95
Fastwrap, Tapenix and Kaizen Foam 12.96
Softwax Kit 12.97

Shop Supplies

Wiping Cloths 12.98–12.99
Tapes 12.100–12.101
Speed Tape 12.101
FrogTape® 12.102
Stretch Wrap 12.103
Extension Cords 12.104
Worklight 12.104
HR2 Panel Rack 12.105
Handle on Demand 12.105
Moving Blankets 12.105
Lateral Parts Cart 12.106
ProDrying™ Rack 12.106

Dimensional data not binding. Dimensions in mm, inches are approximate. We reserve the right to alter specifications without notice.

Screw Guide

→ Flat Countersunk Head with Phillips Drive

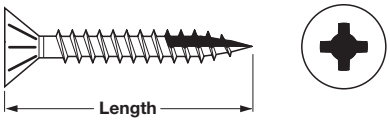

> Type 17 threads
> With nibs

→ Pan Head with Square Drive

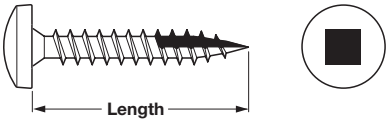

> Type 17 threads

→ Flat Countersunk Head with Phillips Drive

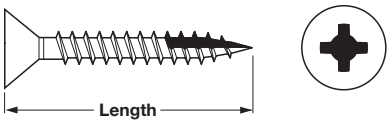

> Type 17 threads

→ Trim Head Screw with Square Drive

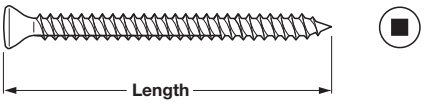

> Fine threads

→ Flat Countersunk Head with Square Drive

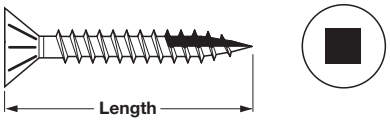

> Type 17 threads
> With nibs

→ Face Frame Pocket Hole Screw with Square Drive

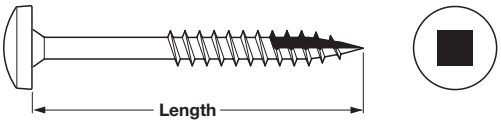

> Type 17 threads

→ Flat Countersunk Head with Square Drive

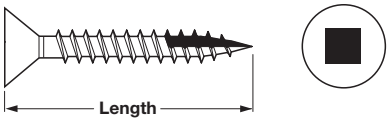

> Type 17 threads

→ Spax® Flat Countersunk Head with Uni-drive

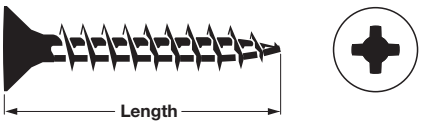

> Serrated cutting threads

→ Flat Countersunk Head with Central Hole

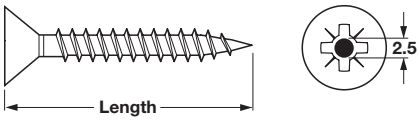

> For plastic caps
> With Pozi Drive

→ Spax® Pan Head with Uni-drive

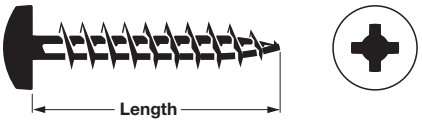

> Serrated cutting threads

→ Pan Head with Phillips Drive

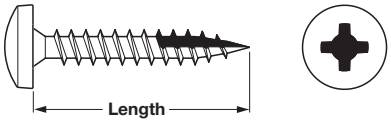

> Type 17 threads

Dimensional data not binding. Dimensions in mm, inches are approximate. We reserve the right to alter specifications without notice.

Screw Guide

→ Powerhead Cabinet Hanging Screw with Square Drive

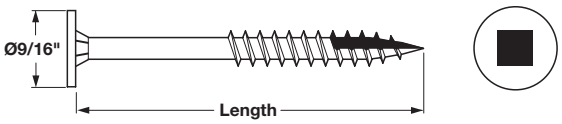

> Type 17 threads

→ Special Pan Head Screw with Phillips Drive

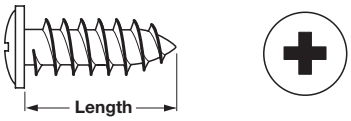

> For ball bearing slides

→ Special Undercut Flat Head Screw with Phillips Drive

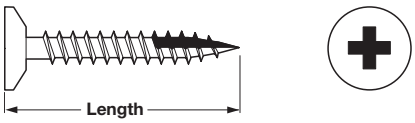

> For expoxy slides
> Type 17 threads

→ Round Washer Head Screw with Pozi Drive

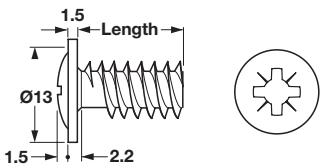

> For 5 mm system holes

→ Modified Truss Head Screw with Pozi Drive

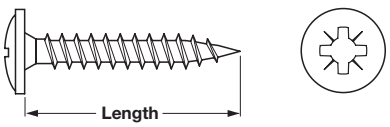

> For back panel attachment

→ Round Washer Head Screw with Phillips Drive

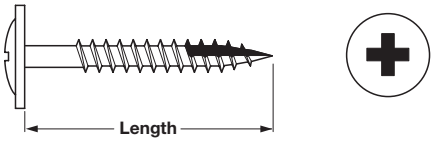

> Type 17 threads

→ Raised Countersunk Head with Pozi Drive

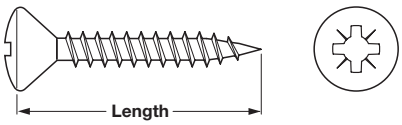

→ Modified Truss Head Screw with Combi Cross/slot Drive

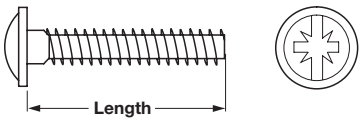

> For attaching decorative hardware

→ Flat Head Countersunk Wood Screw with Phillips Drive

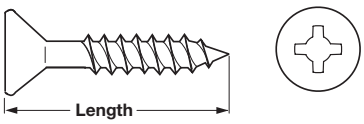

→ Round Head Metal Brad

Dimensional data not binding. Dimensions in mm, inches are approximate. We reserve the right to alter specifications without notice.

Screw Guide

→ Varianta Euro Screw with Special Countersunk Head

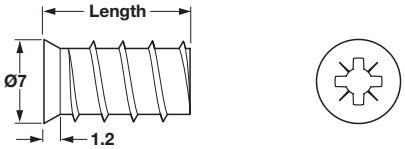

> For drawer slides with pozi drive

→ Varianta Euro Screw with Special Countersunk Head

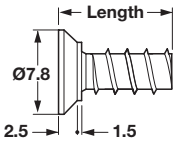

For Ø3 mm hole

> For hinge mounting plates, TAB and KEKU connectors with pozi drive

→ Varianta Euro Screw with Special Countersunk Head

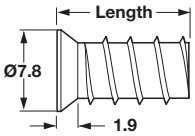

For Ø5 mm hole

> For hinge mounting plates, TAB and KEKU connectors with pozi drive

→ Varianta Euro Screw with Special Cylinder Head

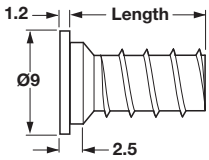

> For Rasant tab connectors, universal and back panel brackets with pozi drive

Dimensional data not binding. Dimensions in mm, inches are approximate. We reserve the right to alter specifications without notice.

Zip-R Screws

→ Flat Countersunk Head Screws

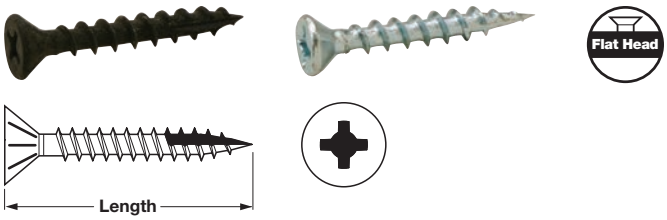

> #2 Phillips drive
> Type 17 self-drilling point
> With nibs under head for self-countersinking
> Coarse thread for fast drive time and maximum holding power
> Case hardened for added strength
> Material: Steel

Ø x Length	Thread type	black oxide	zinc-plated	Packing
#6 x 1/2"	full	010.73.041	010.73.941	1,000 pcs.
#6 x 5/8"	full	010.73.043	010.73.943	1,000 pcs.
#6 x 3/4"	full	010.73.045	010.73.945	1,000 pcs.
#6 x 1"	full	010.73.046	010.73.946	1,000 pcs.
#6 x 1 1/4"	partial	010.73.048	010.73.948	1,000 pcs.
#6 x 1 1/2"	partial	010.73.049	010.73.949	1,000 pcs.
#6 x 1 3/4"	partial	010.73.050	010.73.950	1,000 pcs.
#6 x 2"	partial	010.73.051	010.73.951	1,000 pcs.
#8 x 5/8"	full	010.73.063	010.73.963	1,000 pcs.
#8 x 3/4"	full	010.73.065	010.73.965	1,000 pcs.
#8 x 1"	full	010.73.066	010.73.966	1,000 pcs.
#8 x 1 1/4"	partial	010.23.150	010.23.160	5,000 pcs.
#8 x 1 3/8"	partial	–	010.23.979	5,000 pcs.
#8 x 1 1/2"	partial	010.23.151	010.23.161	4,500 pcs.
#8 x 1 5/8"	partial	010.23.080	010.23.162	4,000 pcs.
#8 x 1 3/4"	partial	010.23.152	010.23.163	3,500 pcs.
#8 x 2"	partial	010.23.153	010.23.164	3,000 pcs.
#8 x 2 1/4"	partial	010.23.154	010.23.165	3,000 pcs.
#8 x 2 1/2"	partial	010.23.155	010.23.166	2,500 pcs.
#8 x 3"	partial	010.23.156	010.23.167	2,000 pcs.

→ Flat Countersunk Head Screws

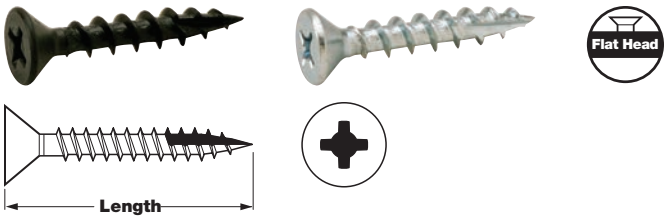

> #2 Phillips drive
> Type 17 self-drilling point
> Material: Steel

Ø x Length	Thread type	black oxide	zinc-plated	Packing
#6 x 1/2"	full	010.71.041	010.71.941	1,000 pcs.
#6 x 5/8"	full	010.71.043	010.71.943	1,000 pcs.
#6 x 3/4"	full	010.71.045	010.71.945	1,000 pcs.
#6 x 1"	full	010.71.046	010.71.946	1,000 pcs.
#6 x 1 1/4"	partial	010.71.048	010.71.948	1,000 pcs.
#8 x 5/8"	full	–	010.71.963	1,000 pcs.
#8 x 3/4"	full	010.71.065	010.71.965	1,000 pcs.
#8 x 1"	full	010.71.066	010.71.966	1,000 pcs.
#8 x 1 1/4"	partial	010.23.170	010.23.180	5,000 pcs.
#8 x 1 1/2"	partial	010.23.171	010.23.181	4,500 pcs.
#8 x 1 3/4"	partial	010.23.172	010.23.182	3,500 pcs.
#8 x 2"	partial	010.23.173	010.23.183	3,000 pcs.
#8 x 2 1/2"	partial	010.23.174	010.23.184	2,500 pcs.
#8 x 3"	partial	010.23.175	010.23.185	2,000 pcs.

→ Cup Washer

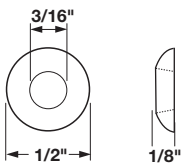

> Used when hanging cabinets to keep screw head from pulling through panel
> Material: Steel; Finish: nickel-plated

Version	Item No.
For #6 countersunk screw	045.17.711
For #8 countersunk screw	045.17.739

Supplied With
1000 pcs.

Dimensional data not binding. Dimensions in mm, inches are approximate. We reserve the right to alter specifications without notice.

Zip-R Screws

→ Flat Countersunk Head Screws

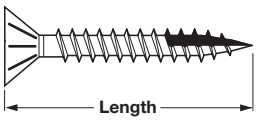

> #2 square drive
> Type 17 self-drilling point
> With nibs under head for self-countersinking
> Coarse thread for fast drive time and maximum holding power
> Case hardened for added strength
> Material: Steel

Ø x Length	Thread type	black oxide	zinc-plated	Packing	zinc-plated	Bulk
#6 x 1/2"	full	010.72.041	010.72.941	1,000 pcs.	010.22.941	30,000 pcs.
#6 x 5/8"	full	010.72.043	010.72.943	1,000 pcs.	010.22.943	30,000 pcs.
#6 x 3/4"	full	010.72.045	010.72.945	1,000 pcs.	010.22.952	11,000 pcs.
#6 x 1"	full	010.72.046	010.72.946	1,000 pcs.	010.22.953	9,000 pcs.
#6 x 1 1/4"	partial	010.72.048	010.72.948	1,000 pcs.	010.22.954	7,000 pcs.
#6 x 1 1/2"	partial	010.72.049	010.72.949	1,000 pcs.	010.22.955	6,000 pcs.
#6 x 1 3/4"	partial	010.72.050	010.72.950	1,000 pcs.	010.22.956	5,000 pcs.
#6 x 2"	partial	010.72.051	010.72.951	1,000 pcs.	010.22.957	4,000 pcs.
#8 x 5/8"	full	–	010.72.963	1,000 pcs.	–	–
#8 x 3/4"	full	010.72.065	010.72.965	1,000 pcs.	010.22.987	8,000 pcs.
#8 x 1"	full	010.72.066	010.72.966	1,000 pcs.	010.22.988	6,000 pcs.
#8 x 1 1/4"	partial	010.22.980	010.23.120	5,000 pcs.	–	–
#8 x 1 1/2"	partial	010.22.981	010.23.121	4,500 pcs.	–	–
#8 x 1 5/8"	partial	010.22.095	010.22.995	6,000 pcs.	–	–
#8 x 1 3/4"	partial	010.22.982	010.23.122	3,500 pcs.	–	–
#8 x 2"	partial	010.22.983	010.23.123	3,000 pcs.	–	–
#8 x 2 1/4"	partial	010.22.984	010.23.124	3,000 pcs.	–	–
#8 x 2 1/2"	partial	010.22.985	010.23.125	2,500 pcs.	–	–
#8 x 3"	partial	010.22.986	010.23.126	2,000 pcs.	–	–

→ Flat Countersunk Head Screws

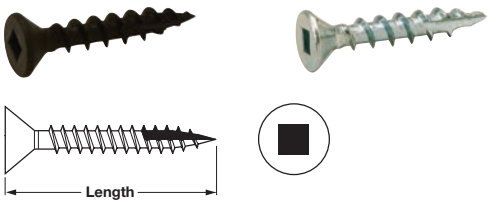

> #2 square drive
> Type 17 self-drilling point
> Material: Steel

Ø x Length	Thread type	black oxide	zinc-plated	Packing
#6 x 1/2"	full	–	010.70.941	1,000 pcs.
#6 x 5/8"	full	010.70.043	010.70.943	1,000 pcs.
#6 x 3/4"	full	010.70.045	010.70.945	1,000 pcs.
#6 x 1"	full	–	010.70.946	1,000 pcs.
#6 x 1 1/4"	partial	010.70.048	010.70.948	1,000 pcs.
#6 x 1 1/2"	partial	–	010.70.949	1,000 pcs
#6 x 1 3/4"	partial	010.70.050	–	1,000 pcs.
#6 x 2"	partial	–	010.70.951	1,000 pcs.
#8 x 1/2"	full	–	010.70.961	1,000 pcs.
#8 x 5/8"	full	–	010.70.963	1,000 pcs.
#8 x 3/4"	full	010.70.065	010.70.965	1,000 pcs.
#8 x 1"	full	010.70.066	010.70.966	1,000 pcs.
#8 x 1 1/4"	partial	010.23.130	010.23.140	5,000 pcs.
#8 x 1 1/2"	partial	010.23.131	010.23.141	4,500 pcs.
#8 x 1 3/4"	partial	010.23.132	010.23.142	3,500 pcs.
#8 x 2"	partial	010.23.133	010.23.143	3,000 pcs.
#8 x 2 1/2"	partial	010.23.134	010.23.144	2,500 pcs.
#8 x 3"	partial	010.23.135	010.23.145	2,000 pcs.

→ Cup Washer

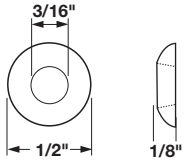

> Used when hanging cabinets to keep screw head from pulling through panel
> Material: Steel; Finish: nickel-plated

Version	Item No.
For #6 countersunk screw	045.17.711
For #8 countersunk screw	045.17.739

Supplied With
1000 pcs.

Dimensional data not binding. Dimensions in mm, inches are approximate. We reserve the right to alter specifications without notice.

Zip-R Screws

→ Pan Head Screws

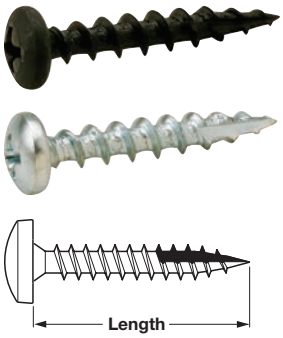

> #2 Phillips drive
> Coarse thread for fast drive time and maximum holding power
> Case hardened for added strength
> Type 17 self-drilling point
> Material: Steel

Ø x Length	Thread type	black oxide	zinc-plated	nickel-plated	Packing
#6 x 1/2"	full	010.83.041	010.83.941	–	1,000 pcs.
#6 x 5/8"	full	010.83.043	010.83.943	–	1,000 pcs.
#6 x 3/4"	full	010.83.045	010.83.945	–	1,000 pcs.
#6 x 1"	full	–	010.83.946	–	1,000 pcs.
#8 x 1/2"	full	010.83.061	010.83.961	–	1,000 pcs.
#8 x 5/8"	full	010.83.063	010.83.963	–	1,000 pcs.
#8 x 3/4"	full	010.83.065	010.83.965	–	1,000 pcs.
#8 x 1"	full	010.83.066	010.83.966	–	1,000 pcs.
#8 x 1 1/4"	partial	010.83.068	010.83.968	–	1,000 pcs.
#8 x 1 1/2"	partial	010.83.069	010.83.969	–	500 pcs.
#8 x 1 3/4"	partial	–	010.83.970	–	500 pcs.
#8 x 2"	partial	–	010.83.971	–	500 pcs.
#10 x 5/8"	partial	–	–	015.85.990	1,000 pcs.
#10 x 3/4"	partial	–	–	015.85.991	1,000 pcs.

→ Pan Head Screws

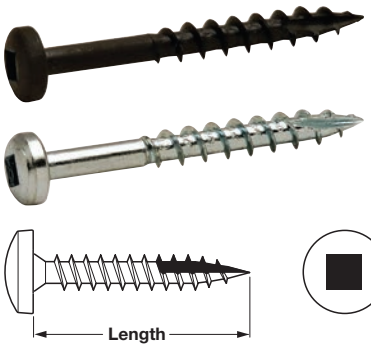

> #2 Square drive
> Type 17 self-drilling point
> Material: Steel

Ø x Length	Thread type	black oxide	zinc-plated	Packing
#6 x 1/2"	full	010.82.041	010.82.941	1,000 pcs.
#6 x 5/8"	full	010.82.043	010.82.943	1,000 pcs.
#6 x 3/4"	full	010.82.045	010.82.945	1,000 pcs.
#6 x 1"	full	010.82.046	010.82.946	1,000 pcs.
#6 x 1 1/4"	partial	010.82.048	010.82.948	1,000 pcs.
#6 x 1 1/2"	partial	010.82.049	–	1,000 pcs.
#8 x 1/2"	full	010.82.061	010.82.961	1,000 pcs.
#8 x 5/8"	full	010.82.063	010.82.963	1,000 pcs.
#8 x 3/4"	full	010.82.065	010.82.965	1,000 pcs.
#8 x 1"	full	–	010.82.966	1,000 pcs.
#8 x 1 1/4"	partial	010.82.068	010.82.968	1,000 pcs.
#8 x 1 1/2"	partial	–	010.82.969	500 pcs.

Dimensional data not binding. Dimensions in mm, inches are approximate. We reserve the right to alter specifications without notice.

Spax® Premium Screws

→ Flat Countersunk Head Screws

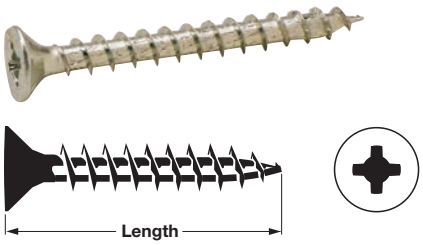

Flat Head

> With Uni-drive
> Serrated cutting threads
> No pre-drilling required
> Square and Phillips combination
> Synthetic coating
> Thread type: Full
> Material: Steel; Finish: zinc-plated

Ø x Length	Item No.	Packing
#6 x 1/2"	015.80.140	50 pcs.
#6 x 5/8"	015.80.141	50 pcs.
#6 x 3/4"	015.80.142	45 pcs.
#6 x 1"	015.80.143	40 pcs.
#6 x 1 1/4"	015.80.144	35 pcs.
#6 x 1 1/2"	015.80.145	30 pcs.
#8 x 5/8"	015.80.146	405 pcs.
#8 x 3/4"	015.80.147	350 pcs.
#8 x 1"	015.80.148	75 pcs.
#8 x 1 1/4"	015.80.149	240 pcs.
#8 x 1 1/2"	015.80.150	197 pcs.
#8 x 1 3/4"	015.80.151	20 pcs.
#8 x 2"	015.80.152	161 pcs.
#8 x 2 1/2"	015.80.153	133 pcs.
#10 x 3/4"	015.80.154	25 pcs.
#10 x 1"	015.80.155	20 pcs.
#10 x 1 1/4"	015.80.156	20 pcs.
#10 x 1 1/2"	015.80.157	130 pcs.
#10 x 2"	015.80.158	105 pcs.
#10 x 2 1/2"	015.80.159	88 pcs.
#10 x 3"	015.80.160	72 pcs.
#10 x 3 1/2"	015.80.161	57 pcs.

→ Pan Head Screws

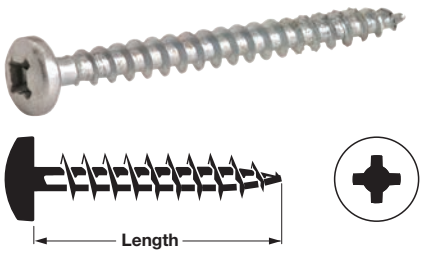

Pan Head

> With Uni-drive
> Serrated cutting threads
> Thread type: Full
> Material: Steel; Finish: zinc-plated

Ø x Length	Item No.	Packing
#6 x 1/2"	015.80.162	500 pcs.
#6 x 5/8"	015.80.163	445 pcs.
#6 x 3/4"	015.80.164	280 pcs.
#8 x 5/8"	015.80.165	320 pcs.
#8 x 3/4"	015.80.166	280 pcs.
#8 x 1"	015.80.167	225 pcs.
#8 x 1 1/4"	015.80.168	300 pcs.
#8 x 1 1/2"	015.80.169	180 pcs.
#8 x 2"	015.80.170	140 pcs.
#10 x 5/8"	015.80.171	175 pcs.
#10 x 3/4"	015.80.172	160 pcs.
#10 x 1"	015.80.173	135 pcs.

Dimensional data not binding. Dimensions in mm, inches are approximate. We reserve the right to alter specifications without notice.

Cabinet Installation Screws

> Case hardened for added strength

→ Square Drive

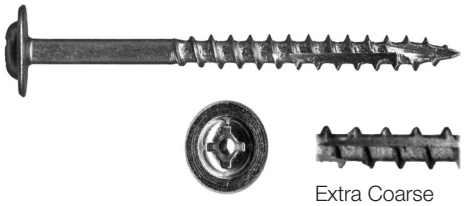

Combi Drive

Extra Coarse Thread

Type 17 Self-drilling Point

> Patented Double Type 17 self-drilling point provides quicker starting, minimizes the need to pre-drill, and reduces torque while preventing splitting
> Extra coarse thread for fast drive time and maximum holding power
> Thread type: Partial

> Material: Steel; Finish: zinc-plated

Ø x Length	Item No.	Packing
#10 x 2 1/2"	010.89.901	1,500 pcs.
#10 x 3"	010.89.902	1,500 pcs.
#10 x 3 1/2"	010.89.903	1,000 pcs.
#10 x 4"	010.89.904	1,000 pcs.
#10 x 2 1/2"	010.89.911	500 pcs.
#10 x 3"	010.89.912	500 pcs.
#10 x 3 1/2"	010.89.913	250 pcs.
#10 x 4"	010.89.914	250 pcs.

Note
Use a #2 drive bit.

> Material: Steel; Finish: white

Ø x Length	Item No.	Packing	Item No.	Bulk
#10 x 2 1/2"	010.89.711	500 pcs.	010.89.701	1,500 pcs.
#10 x 3"	010.89.712	500 pcs.	010.89.702	1,500 pcs.
#10 x 3 1/2"	010.89.713	250 pcs.	010.89.703	1,500 pcs.
#10 x 4"	010.89.714	250 pcs.	010.89.704	1,500 pcs.

Note
Use a #2 drive bit.

→ Phillips Round Washer Head

Phillips Drive

Hi-Lo Thread

Self-piercing Sharp Point

> Designed to work in both wood and metal studs
> Self-piercing sharp point allows for instant starting, quicker penetration and faster drive speeds
> Hi-Lo thread provides greater holding power and eliminates binding in metal studs
> Thread type: Partial
> Material: Steel; Finish: zinc-plated

Ø x Length	Item No.	Packing	Item No.	Bulk
#14 x 2 1/2"	–	100 pcs.	010.88.901	1,500 pcs.
#14 x 3"	–	100 pcs.	010.88.902	1,200 pcs.

Note
Use a #3 drive bit.

→ Phillips Truss Head

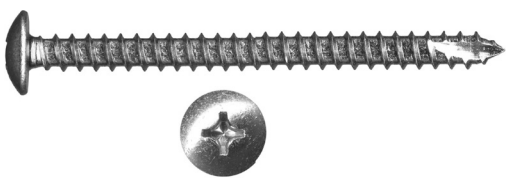

Phillips Drive

Type 17 Self-drilling Point

> Type 17 self-drilling point provides quicker starting, minimizes the need to pre-drill, and reduces torque and splitting
> Thread type: Full
> Material: Steel; Finish: zinc-plated

Ø x Length	Item No.	Packing
#14 x 3"	010.87.902	1,000 pcs.

Note
Use a #2 drive bit.

Dimensional data not binding. Dimensions in mm, inches are approximate. We reserve the right to alter specifications without notice.

Special Application Screws

→ Face Frame Pocket Hole Screw

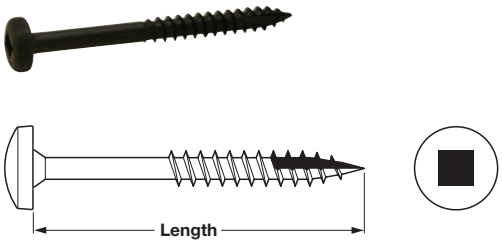

> #2 Square Drive
> Type 17 Self-drilling point
> Fine threads are typically used for hardwoods
> Course threads are typically used for softwoods
> Material: Steel; Finish: black oxide

Length	Thread type	Item No.
#6 x 1 1/4"	partial/fine	015.15.680
#6 x 1 1/2"	partial/fine	015.15.706
#6 x 1 1/4"	partial/coarse	010.82.048
#6 x 1 1/2"	partial/coarse	010.82.049

Supplied With
1000 pcs.

→ Face Frame Pocket Hole Screw

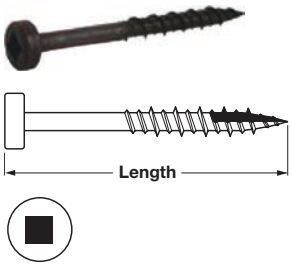

> #2 square drive
> Type 17 Self-drilling point
> Combination of fine/coarse threads for a wider range of applications
> Material: Steel; Finish: black oxide

Length	Item No.
#6 x 1 1/4"	010.92.301
#6 x 1 1/2"	010.92.302
#7 x 1 1/4"	010.85.314
#8 x 1 1/4"	010.85.324

Supplied With
5000 pcs.

→ Flat Countersunk Head

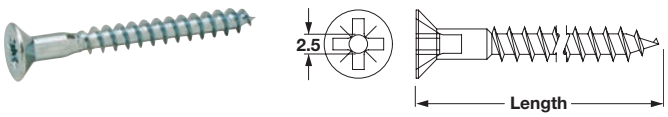

> #2 Pozi drive
> With 2.5 mm internal central hole to accept cover caps
> Material: Steel; Finish: zinc-plated

Length	Item No.	Packing
#9 x 1 1/8"	015.01.944	1,000 pcs.
#9 x 1 3/8"	015.01.953	500 pcs.
#9 x 1 1/2"	015.01.962	500 pcs.
#9 x 2"	015.01.980	500 pcs.
#9 x 2 3/8"	015.02.003	200 pcs.

→ PowerHead Screws for Wood

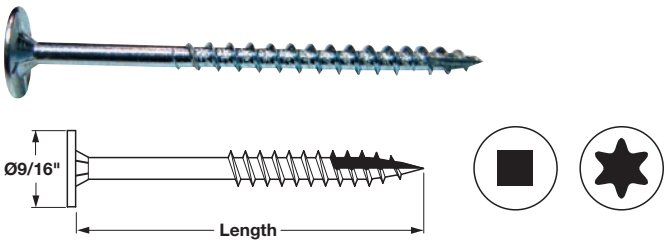

> Type 17 threads
> Flat head can be covered with capfix
> With nibs to help countersink head flush
> Thread type: Partial
> Material: Steel; Finish: zinc-plated

Øx Length	Torx drive	Square drive	Packing
#10 x 1 1/4"	–	264.67.905	200 pcs.
#10 x 1 1/4"	–	264.67.915	2,000 pcs.
#10 x 1 1/2"	–	264.67.906	200 pcs.
#10 x 1 1/2"	–	264.67.916	2,000 pcs.
#10 x 2 1/2"	–	264.67.900	150 pcs.
#10 x 2 1/2"	–	264.67.910	1,500 pcs.
#10 x 3"	264.67.801	264.67.901	150 pcs.
#10 x 3"	–	264.67.911	1,500 pcs.

→ Trim Head Screw

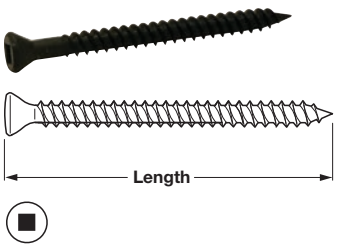

> #1 square drive recess
> Finishing screw, with very small head for fastening without the obvious appearance of the fastener head
> Requires a #1 square drive bit
> Material: Steel
Finish: black oxide

Length	Item No.
#6 x 1 5/8"	015.16.349
#6 x 2 1/4"	015.16.353

Supplied With
1000 pcs.

→ Cover Cap

> Press-fit
> For screw with central hole
> Material: Plastic

Color	Item No.
white	045.18.709
light brown	045.18.101
black	045.18.307
pine	045.18.209
almond	045.18.450

Supplied With
5000 pcs.

Dimensional data not binding. Dimensions in mm, inches are approximate. We reserve the right to alter specifications without notice.

Special Application Screws

→ Flat Head Countersunk Wood Screws

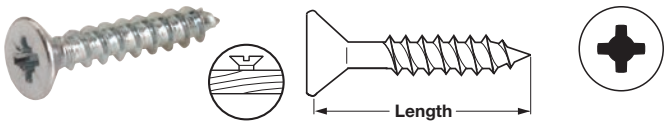

> With Pozi drive
> Length: #5 x 5/8"
> Material: Steel

Finish	Item No.
zinc-plated	015.31.540

Supplied With
100 pcs.

→ Round Head Metal Brads

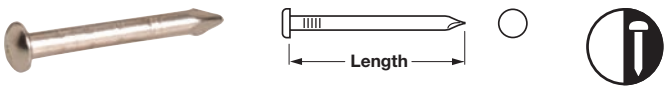

> Length: 1.6 x 15 mm
> Material: Steel

Finish	Item No.
nickel-plated	076.40.299

Supplied With
2000 pcs.

→ Pan Head Screws

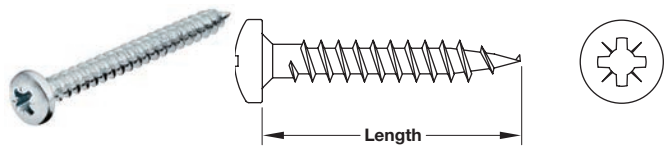

> With Pozi drive
> Length: #4 x 1/2"
> Material: Steel

Finish	Item No.
zinc-plated	015.71.526

Supplied With
1000 pcs.

→ Pan Head Screws

> #2 Phillips Drive
> #4 x 1/2"
> Material: Steel

Finish	Item No.
bronzed	020.45.040

Supplied With
1,000 pcs.

→ Flat Head Countersunk Wood Screws

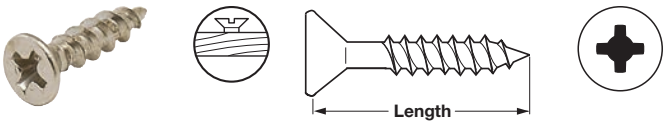

> With Phillips drive
> Deep thread design provides maximum holding power in a variety of different woods and man-made materials
> With extra-deep Phillips recess to help minimize bit slippage
> Material: Steel, plated

Finish	Length	Item No.
zinc	#4 x 1/2"	010.77.901
polished brass	#4 x 5/8"	010.77.502
zinc	#4 x 5/8"	010.77.902
antique english	#5 x 1/2"	010.77.103
zinc	#5 x 1/2"	010.77.903
polished brass	#5 x 5/8"	010.77.836
antique brass	#5 x 5/8"	010.77.136
antique english	#5 x 5/8"	010.77.104
oil-rubbed bronze	#5 x 5/8"	010.77.536
copper bronze	#5 x 5/8"	010.77.036
polished chrome	#5 x 5/8"	010.77.236
satin chrome	#5 x 5/8"	010.77.436
black	#5 x 5/8"	010.77.336
pewter	#5 x 5/8"	010.77.936
satin nickel	#5 x 5/8"	010.77.636
zinc	#5 x 5/8"	010.77.904
polished nickel	#5 x 5/8"	010.77.604
nickel	#6 x 1/2"	010.77.605
zinc	#6 x 1/2"	010.77.905
polished brass	#6 x 5/8"	010.77.846
antique brass	#6 x 5/8"	010.77.146
antique english	#6 x 5/8"	010.77.106
oil-rubbed bronze	#6 x 5/8"	010.77.546
copper bronze	#6 x 5/8"	010.77.046
polished chrome	#6 x 5/8"	010.77.246
satin chrome	#6 x 5/8"	010.77.446
black	#6 x 5/8"	010.77.346
pewter	#6 x 5/8"	010.77.946
satin nickel	#6 x 5/8"	010.77.646
zinc	#6 x 5/8"	010.77.906
nickel	#6 x 3/4"	010.77.610
nickel	#6 x 1"	010.77.612
nickel matt	#6 x 5/8"	010.77.607
polished nickel	#6 x 5/8"	010.77.606

Supplied With
1000 pcs.

Dimensional data not binding. Dimensions in mm, inches are approximate. We reserve the right to alter specifications without notice.

Special Application Screws

→ Raised Countersunk Head Screws

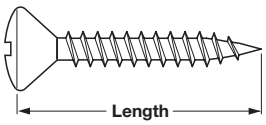

> #2 Pozi drive
> For mounting European hinges and mounting plates
> Thread type: full
> Material: Steel; Finish: nickel-plated

Length	Item No.	Packing
#6 x 9/16"	015.55.639	1,000 pcs.
#6 x 5/8"	015.55.648	1,000 pcs.
#6 x 3/4"	015.55.657	1,000 pcs.
#8 x 3/4"	015.55.844	1,000 pcs.
#8 x 1"	015.55.853	1,000 pcs.
#8 x 1 1/2"	015.55.880	500 pcs.

→ Round Washer Head Screws

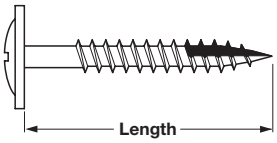

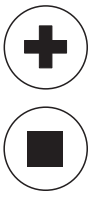

> For attachment of drawer faces to drawer box, allows for adjustment
> For attachment of hardware such as universal brackets and casters
> For cabinet installation
> With #2 Phillips drive or #2 Square drive
> Type 17 threads
> Material: Steel; Finish: nickel-plated

Length	#2 Phillips Drive	#2 Square Drive
#8 x 9/16"	013.28.901	013.32.901
#8 x 3/4"	013.28.902	013.32.902
#8 x 1"	013.28.903	013.32.904
#8 x 1 1/8"	013.28.904	013.32.905
#8 x 1 1/4"	013.29.904	013.32.906
#8 x 1 3/8"	013.28.905	013.32.907
#8 x 1 1/2"	013.29.906	013.32.908
#8 x 1 7/8"	013.28.906	013.32.910
#8 x 2 1/2"	013.28.908	–
#8 x 3"	–	013.32.915

Supplied With
500 pcs.

→ Pan Head Screws

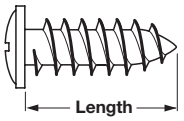

> Shallow head for ball bearing slides
> #2 Phillips drive
> Thread type: full
> #8 x 7/16"
> Material: Steel

Finish	Item No.	Packing
black	013.09.300	200 pcs.
zinc-plated	013.09.901	1,000 pcs.

Dimensional data not binding. Dimensions in mm, inches are approximate. We reserve the right to alter specifications without notice.

Special Application Screws

→ Truss Head Screws

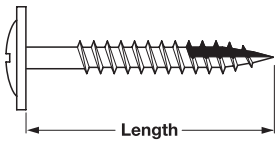

> Ø x Length: #8 x 1"
> Material: Steel; Finish: zinc-plated

	Item No.	Packing	Item No.	Bulk
	013.13.935	1,000 pcs.	012.13.935	9,000 pcs.

→ Undercut Flat Head Screws

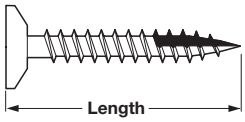

> For epoxy slides
> #2 Phillips drive
> Type 17 threads
> Thread type: full
> Material: Steel; Finish: zinc-plated

Length	Item No.
#6 x 7/16"	010.79.511
#6 x 1/2"	010.79.512
#6 x 5/8"	010.79.513
#6 x 3/4"	010.79.514

Supplied With
1,000 pcs.

→ Euro Screw Square Head

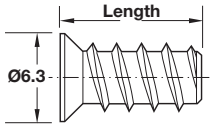

> Material: Steel; Finish: zinc-plated

Ø x Length	Item No.	Packing	Item No.	Bulk
6.3 x 10	013.23.911	1,000 pcs.	013.23.910	10,000
6.3 x 13	013.23.921	1,000 pcs.	013.23.920	10,000

→ Euro Screw

> With #2 Pozi drive
> For 5 mm system holes
> Length x Ø: 15 x 6.3 mm (9/16" x 1/4")
> Material: Steel

Finish	Item No.
zinc-plated	013.02.904

Dimensional data not binding. Dimensions in mm, inches are approximate. We reserve the right to alter specifications without notice.

Varianta Screws

→ Varianta Euro Screw

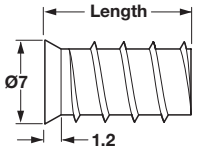

> With #2 Phillips drive
> With special countersunk head
> For drawer slides
> For 5 mm system holes
> Material: Steel; Finish: nickel-plated

Length	Item No.	Packing	Item No.	Bulk
10.5 (13/32")	013.50.718	500 pcs.	012.50.718	5,000 pcs.
13.5 (17/32")	013.50.727	500 pcs.	012.50.727	5,000 pcs.
16 (5/8")	013.50.736	500 pcs.	012.50.736	5,000 pcs.

> With #2 Pozi drive
> Material: Steel; Finish: nickel-plated

Length	Item No.	Bulk
15 (9/16")	012.14.727	5,000 pcs.

→ Varianta Euro Screw

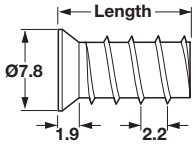

> With #2 Phillips drive
> With special countersunk head
> For hinge mounting plates, Tab, Tab-V, and Keku connectors
> For 5 mm system holes
> Material: Steel; Finish: nickel-plated

Length	Item No.	Packing	Item No.	Bulk
10.5 (13/32")	013.51.715	500 pcs.	012.51.715	5,000 pcs.
13.5 (17/32")	013.51.724	500 pcs.	012.51.724	5,000 pcs.
16 (5/8")	013.51.733	500 pcs.	012.51.733	5,000 pcs.

→ Varianta Euro Screw

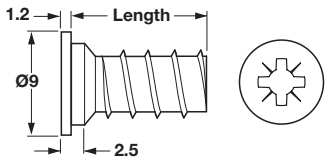

> With #2 Pozi drive
> With special cylinder head
> For Rasant-Tab connectors, universal and back panel brackets
> For 5 mm system holes
> Material: Steel; Finish: zinc-plated

Length	Item No.	Packing	Item No.	Bulk
11 (7/16")	013.20.912	500 pcs.	012.20.912	5,000 pcs.
15 (9/16")	013.20.930	500 pcs.	012.20.930	2,500 pcs.
16 (5/8")	013.20.949	500 pcs.	012.20.949	2,500 pcs.

> Material: Steel; Finish: nickel-plated

Length	Item No.	Packing	Item No.	Bulk
11 (7/16")	013.20.716	500 pcs.	012.20.716	5,000 pcs.
16 (5/8")	013.20.743	500 pcs.	012.20.743	2,500 pcs.

→ Varianta Euro Screw

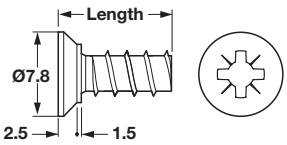

> With #2 Pozi drive
> For 3 mm system holes
> Material: Steel; Finish: nickel-plated

Length	Item No.	Packing	Item No.	Bulk
10.5 (13/32")	013.15.617	1000 pcs.	–	–
13.5 (17/32")	013.15.626	500 pcs.	012.15.626	5,000

→ Round Washer Head Screws

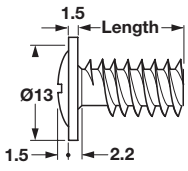

> For 5 mm system holes with #2 Pozi drive
> For attachment of hardware in system holes, universal brackets, accessories, etc.
> Material: Steel; Finish: zinc-plated

Length	Item No.	Packing
15 (9/16")	013.10.149	1000 pcs.
28 (1 1/8")	013.10.283	500 pcs.

Dimensional data not binding. Dimensions in mm, inches are approximate. We reserve the right to alter specifications without notice.

Modified Truss Head Screws with Combi Cross/slot Drive

→ Screw, M4

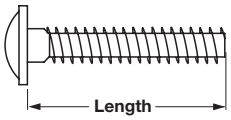

> With combi cross/slot drive
> Material: Steel; Finish: zinc-plated

Length	Item No.	Packing	Item No.	Bulk
M4 x 10 (13/32")	022.35.109	100 pcs.	022.45.109	1,000 pcs.
M4 x 12 (1/2")	022.35.127	100 pcs.	022.45.127	1,000 pcs.
M4 x 15 (5/8")	022.35.154	100 pcs.	022.45.154	1,000 pcs.
M4 x 18 (11/16")	022.35.181	100 pcs.	022.45.181	1,000 pcs.
M4 x 20 (13/16")	022.35.207	100 pcs.	022.45.207	1,000 pcs.
M4 x 22 (7/8")	022.35.225	100 pcs.	022.45.225	1,000 pcs.
M4 x 23 (15/16")	022.35.234	100 pcs.	022.45.234	1,000 pcs.
M4 x 25 (1")	022.35.252	100 pcs.	022.35.253	1,000 pcs.

→ Screw, 8-32

> With combi cross/slot drive
> Material: Steel; Finish: yellow zinc

Length	Item No.	Packing	Item No.	Bulk
8-32 x 10 (13/32")	022.24.100	100 pcs.	022.25.100	1,000 pcs.
8-32 x 15 (5/8")	022.24.150	100 pcs.	022.25.150	1,000 pcs.
8-32 x 20 (13/16")	022.24.200	100 pcs.	022.25.200	1,000 pcs.
8-32 x 25 (1")	022.24.256	100 pcs.	022.25.256	500 pcs.
8-32 x 25 (1")	–	–	022.25.258	5,000 pcs.
8-32 x 38 (1 1/2")	022.24.381	100 pcs.	022.25.381	500 pcs.
8-32 x 45 (1 3/4")	022.24.452	100 pcs.	022.25.452	500 pcs.
8-32 x 45 (1 3/4")	–	–	022.25.454	3,000 pcs.
8-32 x 75 (3")	022.24.750	100 pcs.	–	–

→ Screw, 8-32

> With combi cross/slot drive
> Material: Steel; Finish: zinc-plated

Length	Item No.	Packing	Item No.	Bulk
8-32 x 22 (7/8")	022.24.229	100 pcs.	022.25.229	1,000 pcs.
8-32 x 32 (1 1/4")	022.24.327	100 pcs.	022.25.327	500 pcs.
8-32 x 35 (1 3/8")	022.25.350	100 pcs.	–	–
8-32 x 42 (1 21/32")	022.24.410	100 pcs.	022.25.410	500 pcs.
8-32 x 48 (1 7/8")	022.24.470	100 pcs.	–	–
8-32 x 51 (2")	022.24.500	100 pcs.	–	–

→ Screw, M4

> With combi cross/slot drive
> Install with a #2 Pozi drive or #2 Phillips screwdriver
> Material: Steel; Finish: nickel-plated

Length	Item No.	Packing	Item No.	Bulk
M4 x 15 (5/8")	022.34.157	100 pcs.	022.44.157	1,000 pcs.
M4 x 25 (1")	022.34.255	100 pcs.	022.44.255	1,000 pcs.

> Material: Steel; Finish: zinc-plated

Length	Item No.	Packing	Item No.	Bulk
M4 x 28 (1 1/8")	022.35.289	100 pcs.	022.45.289	500 pcs.
M4 x 30 (1 3/16")	022.35.305	100 pcs.	022.45.305	500 pcs.
M4 x 35 (1 3/8")	022.35.350	100 pcs.	022.45.350	500 pcs.
M4 x 38 (1 1/2")	022.35.387	100 pcs.	022.45.387	500 pcs.
M4 x 40 (1 9/16")	022.35.403	100 pcs.	022.45.403	500 pcs.
M4 x 45 (1 3/4")	022.35.458	100 pcs.	022.35.457	500 pcs.
M4 x 45 (1 3/4")	–	–	022.45.458	3,000 pcs.
M4 x 50 (2")	022.35.501	100 pcs.	022.45.501	500 pcs.
M4 x 60 (2 3/8")	–	100 pcs.	022.45.609	500 pcs.
M4 x 70 (2 3/4")	022.35.700	100 pcs.	022.45.700	300 pcs.
M4 x 75 (3")	022.35.750	100 pcs.	–	–

→ Screw, cut off

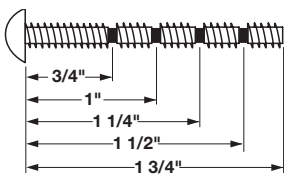

> Install with a #2 Phillips screwdriver
> Cut to length by using wire snips
> Length options: 19–45 mm (3/4"–1 3/4")

8-32

> Material: Steel; Finish: yellow zinc

Length	Item No.	Packing	Item No.	Bulk
8-32 x 19–45 (3/4–1 3/4")	022.24.881	100 pcs.	022.25.881	500 pcs.

M4

> Material: Steel; Finish: zinc-plated

Length	Item No.	Packing	Item No.	Bulk
M4 x 19–45 (3/4–1 3/4")	022.35.887	100 pcs.	022.45.887	500 pcs.

Dimensional data not binding. Dimensions in mm, inches are approximate. We reserve the right to alter specifications without notice.

Large Pan Head Screws and Hangar Bolts

→ Screw, M6

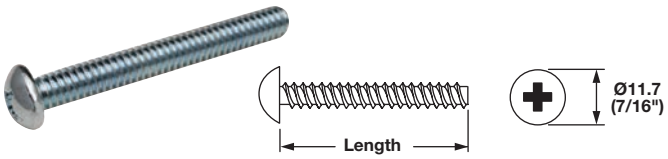

> With #2 Phillips Drive
> Material: Steel; Finish: zinc-plated

Length	Item No.
M6 x 20 (13/16")	020.43.271
M6 x 25 (1")	020.43.272
M6 x 30 (1 3/16")	020.43.273
M6 x 40 (1 9/16")	020.43.275
M6 x 45 (1 3/4")	020.43.276
M6 x 50 (2")	020.43.277

Supplied With
50 pcs.

→ Screw, 1/4-20

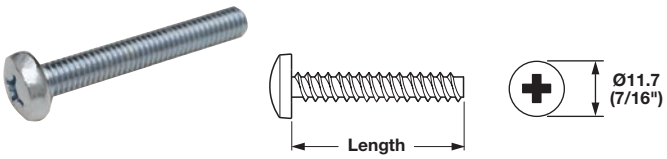

> With #2 Phillips Drive
> Material: Steel; Finish: zinc-plated

Length	Item No.
1/4-20 x 3/4"	020.42.271
1/4-20 x 1"	020.42.272
1/4-20 x 1 1/4"	020.42.273
1/4-20 x 1 1/2"	020.42.275
1/4-20 x 2 1/2"	020.42.280
1/4-20 x 3"	020.42.282

Supplied With
50 pcs.

→ Washer

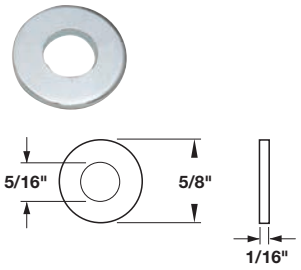

> For decorative screws
> Material: Steel

Finish	Item No.
zinc-plated	037.05.934

Supplied With
50 pcs.

→ Cup Washer

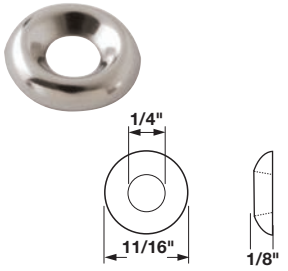

> Used when hanging cabinets to keep screw head from pulling through panel
> For #12 Countersunk Screws
> Material: Steel

Finish	Item No.
nickel-plated	045.17.760

Supplied With
1000 pcs.

→ Dowel Screw, 1/4-10

> Length: 76 mm (3")
> Material: Steel

Finish	Item No.
zinc-plated	026.13.923

Supplied With
1500 pcs.

→ Hangar Bolt

M4

> Length: 25 mm (1")
> Material: Steel

Finish	Item No.	Packing	Item No.	Bulk
zinc-plated	026.11.902	100 pcs.	026.11.922	1,000 pcs.

8-32

> Length: 25 mm (1")
> Material: Steel

Finish	Item No.	Packing	Item No.	Bulk
yellow chromate	026.11.942	100 pcs.	026.11.962	1,000 pcs.

M8

> Length: 25 mm (1")
> Material: Steel

Finish	Item No.
yellow chromate	026.12.944

Supplied With
100 pcs.

Dimensional data not binding. Dimensions in mm, inches are approximate. We reserve the right to alter specifications without notice.

Wall Anchors

→ Self-Drilling Drywall Anchors

> Installs quickly and easily with Phillips or Square drive screwdriver
> Self-driving, pre-drills own small precise hole in gypsum wallboard
> Deep thread design provides strong engagement in 10, 13 and 16 mm (3/8", 1/2", 5/8") wallboard
> Removable, can be easily backed out
> Accepts #8 screw size
> Weight capacity: 50 lbs. shear strength
> Nylon version is non-conductive and corrosion resistant
> Material: Steel or Nylon

Finish	Item No.	Packing	Item No.	Bulk
Steel/zinc	051.18.027	100 pcs.	051.18.028	2,500 pcs.
Nylon/white	051.18.036	100 pcs.	–	–

→ SnapSkru® Self-Drilling Drywall Anchors

> Unique “Snap Lock” feature provides the positive behind-the-wall locking and holding power of a toggle bolt
> Creates only a 6 mm (1/4") hole
> Drywall thickness: min. 10 mm (3/8"); max. 16 mm (5/8")
> Material: Injection Molded Nylon

→ SPM Mini

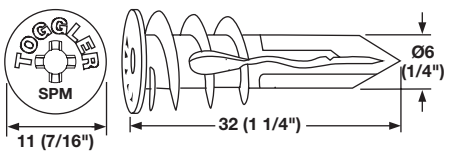

> Weight capacity: 95 lbs. in 16 mm (5/8") drywall
> Screw Ø: #6 (preferred), #7 and #8
> Screw length: min. 25 mm (1") plus item thickness
> Clearance behind wall for anchor: min. 16 mm (5/8") behind 13 mm (1/2") drywall; 13 mm (1/2") behind 16 mm (5/8") drywall
> Color: white

	Item No.	Packing	Item No.	Bulk
	051.18.040	100 pcs.	051.18.041	10,500 pcs.

→ SP Regular

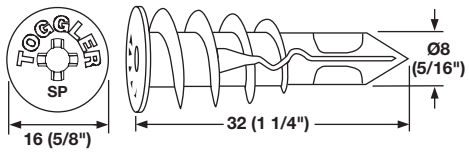

> Weight capacity: 135 lbs. in 16 mm (5/8") drywall
> Screw Ø: #8 (preferred), #6 and #10
> Screw length: min. 32 mm (1 1/4") plus item thickness
> Clearance behind wall for anchor: min. 42 mm (1 5/8") minus wall thickness

Color	Item No.
white	051.18.051

Supplied With
5,500 pcs.

Dimensional data not binding. Dimensions in mm, inches are approximate. We reserve the right to alter specifications without notice.

Cover Caps

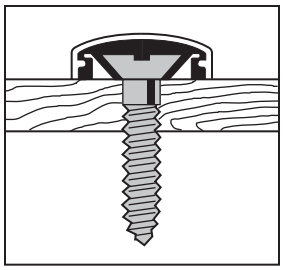

Installation of countersunk screw with washer and snap cap.

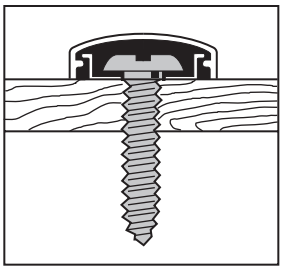

Installation of panhead screw with washer and snap cap.

→ Snap Caps

> With washers
> For screws up to Ø4 mm (5/32")
> Material: Plastic

Version	Item No.	Packing
Flat head	045.06.030	10,000 pcs.
Pan head	045.08.034	1,000 pcs.

→ Cover Caps

> For washers
> Material: Plastic

Color	Item No.
white	045.06.709
beige	045.06.405
brown	045.06.101
black	045.06.307

Supplied With
5000 pcs.

→ Cover Caps

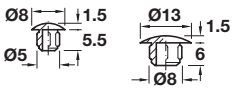

> Ribbed or slightly tapered for tighter grip
> Material: Plastic

Color	Item No.	Item No.
white RAL 9010	045.10.712	045.00.789
dark brown RAL 8014	–	045.00.181
black RAL 9005	045.10.310	045.00.387

Supplied With
5000 pcs.

→ Cover Caps

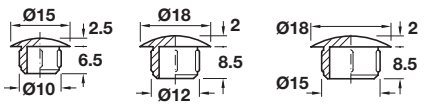

> Ribbed or slightly tapered for tighter grip
> Material: Plastic

Color		Item No.	
white RAL 9010	045.00.743	045.00.734	045.00.798
black RAL 9005	045.00.341	–	045.00.396
Supplied With	5000 pcs.	500 pcs.	3000 pcs.

Dimensional data not binding. Dimensions in mm, inches are approximate. We reserve the right to alter specifications without notice.

Capfix

> Can be cut to fit
> Same texture, color and appearance of industry standard sheet goods
> Provides durable, attractive coverage

→ Self-Adhesive

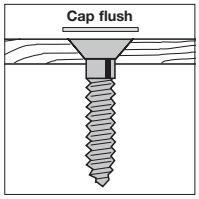

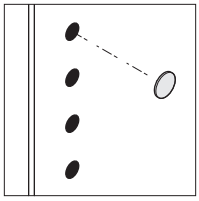

> Thickness: 0.90 mm
> Peel-28.3 N/2.5 cm
> Ultimate Peels-36.2 N/2.5 cm
> Hold: 13.8 KPQ
> Temperature resistance: 40-121 C
> Application temperature: 12.5 C
> Release liner: 98 GSM
> Material: Polyvinyl

Finish	Item No.
white	045.23.700
antique white	045.23.710
almond	045.23.400
black	045.23.300
folkstone gray	045.23.500
fog gray	045.23.510
hard rock maple	045.24.110
manitoba maple	045.23.110
light maple	045.23.112
clear maple	045.23.113
american maple	045.23.114
red mahogany	045.23.210
dark red mahogany	045.23.211
natural cherry	045.23.610
bourbon cherry	045.23.613
presidential walnut	045.23.213
imperial walnut	045.23.702
mahogany on walnut	045.23.701
beech	045.23.310

→ Sampler Box

	Item No.
	045.23.990

Supplied With
1 Sheet (52 caps) of each wood shown above

Dimensional data not binding. Dimensions in mm, inches are approximate. We reserve the right to alter specifications without notice.

Capfix

> Real wood, can be cut to fit
> Easy to apply without caulking or extra glue
> Same texture, color and appearance of industry standard sheet goods
> Provides durable, attractive coverage
> Can be sanded, stained and finished to match hard and softwood case goods

→ Self-Adhesive

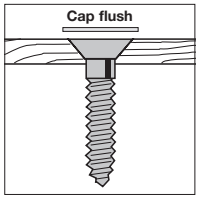

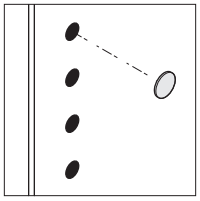

> Thickness: 0.90 mm
> Peel-28.3 N/2.5 cm
> Ultimate Peels-36.2 N/2.5 cm
> Hold: 13.8 KPQ
> Temperature resistance: 40-121 C
> Application temperature: 12.5 C
> Release liner: 98 GSM
> Material: Wood Veneer

Unfinished

white oak

maple

walnut

Finished

birch

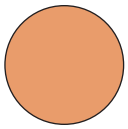
maple

Finish	Item No.
Unfinished	
white oak	045.24.400
maple	045.24.100
walnut	045.24.700
Finished	
birch	045.24.801
maple	045.24.101

→ Wood Sampler Box

> Unfinished

	Item No.
	045.24.990

Supplied With
1 Sheet (52 caps) of each wood shown above

Dimensional data not binding. Dimensions in mm, inches are approximate. We reserve the right to alter specifications without notice.

Drillbit System

→ Flushmount System

> Fits into small spaces
> Ball bearing stop collar
> Adjustable 1/8" (3 mm) pilot bit
> Carbide bit
> 14 mm (9/16")
> Material: Housing: Steel; Bit: Carbide

	Item No.
	001.24.210

Custom Capfix

→ Custom Color Punch Kit

> Create a custom Capfix

	Item No.
	001.32.770

Supplied With
Flushmount drillbit

Note
Not intended for plastic laminate.

→ Replacement Dies

> Material: Metal

Size	Item No.
14.29 (9/16")	001.32.773
18 (11/16")	001.32.774
9.5 (3/8")	001.32.775

Dimensional data not binding. Dimensions in mm, inches are approximate. We reserve the right to alter specifications without notice.

FAMOWOOD®

→ Latex Wood Filler

> Size: 16 oz. (1 pint)
> Dries in 15 minutes; Won't crack or shrink
> Can be sanded, drilled or planed; Stainable and paintable
> Interior/exterior use
> Solvent free — low odor and easy water cleanup
> Use FAMOWOOD on cabinets, doors, moulding and furniture. Great for repairing nail holes, screw holes, cracks, dents, knot holes and gouges.

INSTRUCTIONS FOR SAFE USE
1: For best adhesion, cracks or defects should be clean and dry.
2: Press firmly into defect by hand or putty knife.
3: A thin film will dry within minutes. Lower temperatures require longer drying periods.
4: When dry, sand flush with surrounding surfaces.
5: Surfaces may be painted, varnished, lacquered, waxed, or shellacked after FAMOWOOD application.
6: FAMOWOOD can be drilled, nailed, planed or sawed like ordinary wood.
7: Clean tools, while still wet, with water or soap and water. If product has dried on tools, use chlorinated solvent or steam.
8: Close container after each use.

FAQs
Is FAMOWOOD latex wood filler easy to use?
Yes, requires no mixing; spreads smoothly and evenly into small or large holes, cracks and defects in unfinished wood.

How long does it take FAMOWOOD latex wood filler to dry?
Dries in 15 minutes. Once dry, it acts just like real wood and is ready to sand, saw, stain, nail paint or plane.

What makes FAMOWOOD latex wood filler unique?
Has a high solid content of wood flour and takes stains and paints like real wood because it is made of real wood.

Will FAMOWOOD latex wood filler shrink or crack?
Shows no signs of shrinkage, cracking or crumbling and can be used indoors or outside, making it ideal for any custom projects.

Color	Item No.
natural	007.39.520
oak	007.39.530
red oak	007.39.540
walnut	007.39.550
cherry/dark mahogany	007.39.570
fir/maple	007.39.580

→ Original Wood Filler

> Size: 24 oz. (1.5 pint)
> Dries in 15 minutes; Won't crack or shrink
> Can be sanded, drilled or planed; Stainable and paintable
> Interior/exterior use
> The choice of professional woodworkers for over 70 years!
> Whether you are masking small or large defects, FAMOWOOD can handle the job. Spreads smoothly into cracks and holes, takes stains and paints evenly and resists cracking. Perfect for any type of custom wood project

INSTRUCTIONS FOR SAFE USE
1: Test small area before use.
2: Surface must be clean and dry.
3: Allow contents to dry thoroughly before sanding (15 minutes)
4: Accepts most water-based and oil-based stains.
5: TEST STAIN COMPATIBILITY BEFORE USE
6: For deep repairs, allow 1st layer to dry before applying subsequent layers Replace lid tightly.
7: Use FAMOWOOD Wood Filler Thinner to restore.

FAQs
Is FAMOWOOD Wood Filler easy to use?
Yes, requires no mixing; Spreads smoothly and evenly into small or large defects in unfinished wood.

How long does it take for FAMOWOOD Wood Filler to dry?
Dries in 15 minutes. Once dry, it acts just like real wood and is ready to sand, saw, stain, nail, paint or plane.

What makes FAMOWOOD Wood Filler unique?
It has a high solid content of wood flour and is made of real wood.

Will FAMOWOOD Wood Filler shrink or crack?
No, shows no signs of shrinkage, cracking or crumbling and can be used indoors or outside.

Will FAMOWOOD Wood Filler match the existing color?
Yes, available in 18 colors to match any unfinished wood species.

Color	Item No.
ash	007.39.201
alder	007.39.202
fir	007.39.203
mahogany	007.39.204
birch	007.39.211
natural/tupelo	007.39.221
oak/teak	007.39.231
red oak	007.39.241
walnut	007.39.251
cedar	007.39.261
maple	007.39.281

→ Wood Filler Thinner

> Outstanding UV protection
> Tough – designed for use on hardwood floors, floor boards, boats and other high traffic surfaces
> Abrasion and scratch resistant
> Fast drying – dries in half the time varnishes require
> Easy-to-use – no mixing required
> Designed to keep FAMOWOOD Original wood filler in top working condition. Restores wood filler to its original consistency and workability and eliminates waste while extending the life of the filler.

Size	Item No.
1 gallon	007.39.208

Dimensional data not binding. Dimensions in mm, inches are approximate. We reserve the right to alter specifications without notice.

SENCO® Finish Nails

→ 15 Ga. 34° Angled Strip Finish Nails

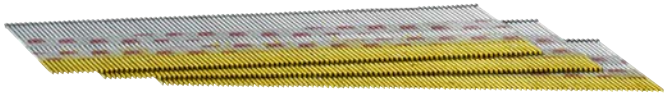

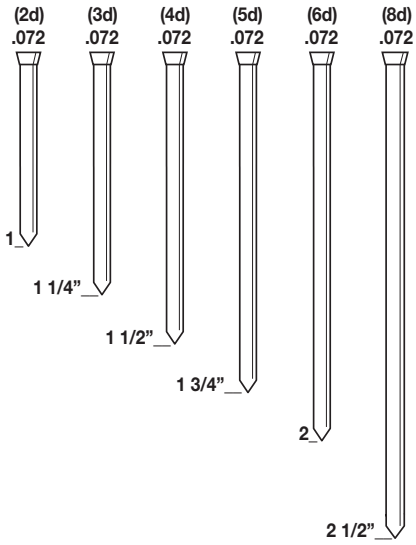

> For furniture and cabinets, mouldings and trims, baseboards, chair rails, window casings and upholstery trim panels
> Chisel point; Collation: tape
> Material: Steel; Coating: Sencote

Length	Senco No.	Finish	Item No.
1 1/4"	DA15EPBN	bright	006.50.893
1 1/2"	DA17EPBN	bright	006.50.890
1 3/4"	DA19EPBN	bright	006.50.895
2"	DA21EPBN	bright	006.50.891
2 1/2"	DA25EPB	bright	006.50.892
1 1/2"	DA17EABN	galvanized	006.50.700
2"	DA21EABN	galvanized	006.50.701
2 1/2"	DA25EAB	galvanized	006.50.702

Box Supplied With
1 1/4" – 2" – 4,000 Nails
2 1/2" – 3,000 Nails

→ 16 Ga. Straight Strip Finish Nails

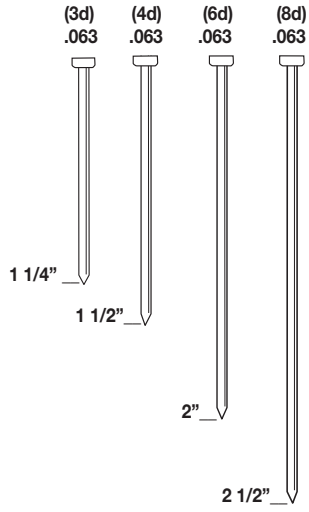

> For furniture and cabinets, mouldings and trims, baseboards, chair rails, window casings and upholstery trim panels
> Chisel point; Collation: glue
> T-head
> Material: Steel, galvanized: Coating: Sencote

Length	Senco No.	Item No.
1 1/4"	M001002	006.50.883
1 1/2"	M001003	006.50.880
2"	M001005	006.50.881
2 1/2"	M001007	006.50.882

Box Supplied With
2,000 Nails

Dimensional data not binding. Dimensions in mm, inches are approximate. We reserve the right to alter specifications without notice.

SENCO® Finish Nails

→ 18 Ga. Straight Strip Brad Nails

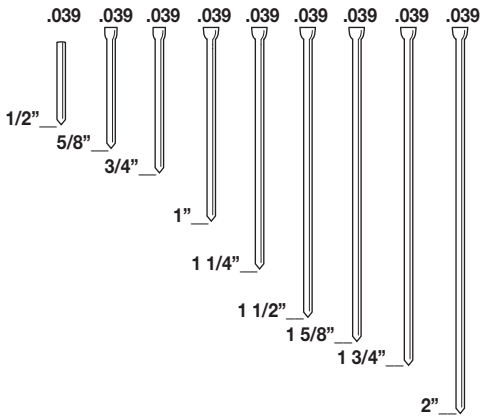

> For cabinets, decorative trim, picture frames and ornamentals
> Chisel point; Collation: glue
> Medium head size
> Material: Steel, galvanized

Length	Senco No.	Head	Item No.
1/2"	AZ08EAA	headless	006.50.040
5/8"	AY10EAA	slight	006.50.030
3/4"	AY11EAA	slight	006.50.031
1"	AY13EAA	slight	006.50.643
5/8"	AX10EAA	medium	006.50.874
3/4"	AX11EAA	medium	006.50.875
1"	AX13EAA	medium	006.50.876
1 1/4"	AX15EAA	medium	006.50.870
1 1/2"	AX17EAA	medium	006.50.871
1 5/8"	AX18EAA	medium	006.50.872
1 3/4"	AX19EAA	medium	006.50.877
2"	AX21EAAN	medium	006.50.873

Box Supplied With
5,000 Nails

→ 23 Ga. Headless Straight Strip Pins

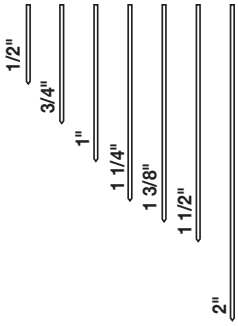

> Fasten the smallest of trim securely leaving an almost invisible hole
> Material: Steel, galvanized

Length	Senco No.	Item No.
1/2"	A100509	006.50.721
5/8"	A100629	006.50.722
3/4"	A100759	006.50.720
1"	A101009	006.50.723
1 1/4"	A101259	006.50.735
1 3/8"	A101379	006.50.724
1 1/2"	A101509	006.50.726
2"	A102009	006.50.727
*1/2–1"	A109809	006.50.730

Clamshell Pack Supplied With
2,600 Pins
* 2,500 Pins

→ 21 Ga. Medium Head Pins

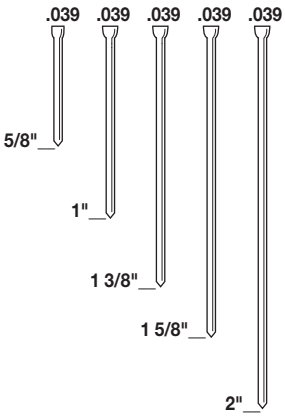

> Offers significant holding power while leaving a much smaller indent than an 18 gauge brad
> Material: Steel, galvanized

Length	Senco No.	Item No.
5/8"	ZX10EAA	006.50.050
1"	ZX13EAA	006.50.052
1 3/8"	ZX16EAA	006.50.053
1 5/8"	ZX18EAA	006.50.054
2"	ZX21EAA	006.50.055

Box Supplied With
5,000 Pins

Dimensional data not binding. Dimensions in mm, inches are approximate. We reserve the right to alter specifications without notice.

SENCO®

→ 2 1/2" Finish Nailer, Finish Pro®

> For 16 gauge fastener series MO
> Adjustable depth-of-drive
> EZ-Clear™ latch to clear jams fast
> 360° adjustable exhaust
> Comfort grip
> Belt hook
> No-mar pad
> W x L x H: 3" x 12.16" x 10.88"
> Material: Magnesium

Senco No.	Item No.
32	006.50.225

Supplied With
Case

→ 2 1/2" Angled Finish Nailer, Finish Pro®

> For 15 gauge fastener series DA
> 360° adjustable exhaust
> Durable and ultra-light
> Rugged internal engine design
> High-strength driver with threaded connection, metal cylinder wand and robust piston
> EZ-Clear™ latch and clear jams fast
> Two no-mar pads protect woodwork
> Over-molded grip reduces vibration and fatigue
> Never-Lube® design for oil-free operation
> Belt hook
> Adjustable depth-of-drive for precise fastener placement
> W x L x H: 3 1/2" x 13" x 11 1/4"
> Material: Magnesium

Senco No.	Item No.
42XP	006.50.215

→ Cordless 2 1/8" Brad Nailer

> For 18 gauge fastener series AY or AX
> Patented Instant-Shot design
> Robust aluminum drive cylinder
> Rugged aluminum magazine
> Eco-friendly 18v Li-ion battery
> Selectable drive switch
> Nose mounted LED light
> Adjustable belt hook
> Thumbwheel depth-of-drive
> Innovative EZ-Clear™ feature
> W x L x H: 3" x 11" x 13"
> Material: Aluminum

Senco No.	Item No.
FN55AX	006.50.220

Supplied With
Storage bag and charger

Dimensional data not binding. Dimensions in mm, inches are approximate. We reserve the right to alter specifications without notice.

SENCO®

→ 2 1/8" Brad Nailer, Finish Pro®

> For 18 gauge fastener series AY or AX
> Durable and ultra-light
> Metal cylinder for increased durability
> Oil-free design
> Adjustable depth-of-drive
> Rotatable rear exhaust and belt hook
> Swivel air plug
> Over-mold rubber comfort grip
> W x L x H: 2.5" x 10.5" x 9.75"
> Material: Magnesium

Senco No.	Item No.
F1P18MG	006.50.280

Supplied With
Case and wrench

→ 2 1/8" Brad Nailer, Finish Pro®

> For 18 gauge fastener series AY or AX
> Drives both slight and medium-headed brads
> Never-Lube® design
> Comfort grip
> Belt hook
> No-mar pad
> Adjustable depth-of-drive
> W x L x H: 2.2" x 9.8" x 9.9"
> Material: Magnesium

Senco No.	Item No.
25XP	006.50.320

Supplied With
Case and wrench

→ 1 5/8" Brad Nailer

> For 18 gauge fastener series AY or AX
> Drives both slight and medium-headed brads
> Minimum maintenance required
> Muffler ensures quieter operation
> Never-Lube® design
> W x L x H: 2" x 9.5" x 8.25"
> Material: Magnesium

Senco No.	Item No.
SLP20XP	006.50.290

Supplied With
Case and wrench

Dimensional data not binding. Dimensions in mm, inches are approximate. We reserve the right to alter specifications without notice.

SENCO®

→ 1 3/8" Headless Pinner, Finish Pro®

> For 23 gauge fastener series A1 or CZ
> Extra power ensures complete drives into hard substrates
> Automatically adjusts for different fastener lengths
> Ergonomic handle
> Reversible belt hook
> Last nail lockout prevents dry-fitting
> Ultra narrow nose for tight corners
> W x L x H: 1.85" x 7.87" x 7.56"
> Material: Magnesium

Senco No.	Item No.
TN11G1	006.50.246

→ 2" Medium Head Pinner, Finish Pro®

> For 21 gauge fastener series ZX
> Extra power ensures complete drives into hard substrates
> Automatic adjustable magazine
> Ergonomic handle
> Reversible belt hook
> Last nail lockout prevents dry-fitting
> W x L x H: 1.85" x 7.87" x 8.89"
> Material: Magnesium

Senco No.	Item No.
TN21L1	006.50.247

→ 2" Headless Pinner, Finish Pro®

> For 23 gauge fastener series A1 or CZ
> Extra power ensures complete drives into hard substrates
> Automatic adjustable magazine
> Rear exhaust with embedded muffler
> Ergonomic handle
> Reversible belt hook
> Last nail lockout prevents dry-fitting
> W x L x H: 2.38" x 7.87" x 8.89"
> Material: Magnesium

Senco No.	Item No.
TN11L1	006.50.210

Dimensional data not binding. Dimensions in mm, inches are approximate. We reserve the right to alter specifications without notice.

SENCO®

→ 16 Ga. 7/16" Crown Heavy Wire

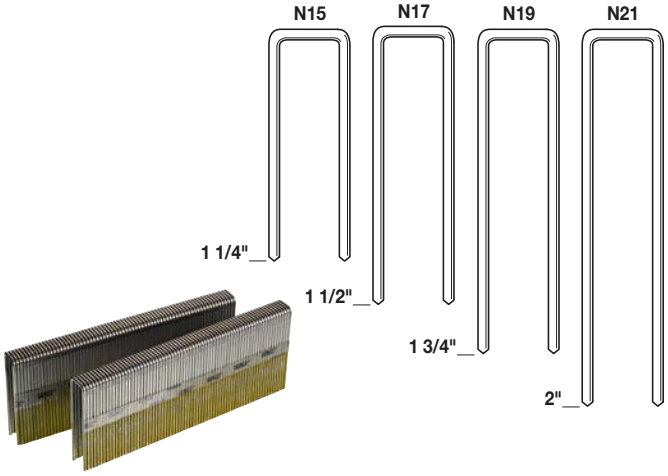

> For cabinets, casebacks, drawers, upholstery, soffits, underlayment, lattice and sheathing
> Chisel point; Collation: tape
> Width: .062; Thickness: .055
> Material: Steel; Coating: Sencote

Length	Senco No.	Finish	Item No.
1 1/4"	N15BAB	galvanized	006.50.090
1 1/4"	N15BRB	bright	006.50.111
1 1/2"	N17BRB	bright	006.50.110
1 3/4"	N19BRB	bright	006.50.170

Box Supplied With
10,000 Staples

→ 18 Ga. 1/4" Crown Medium Wire

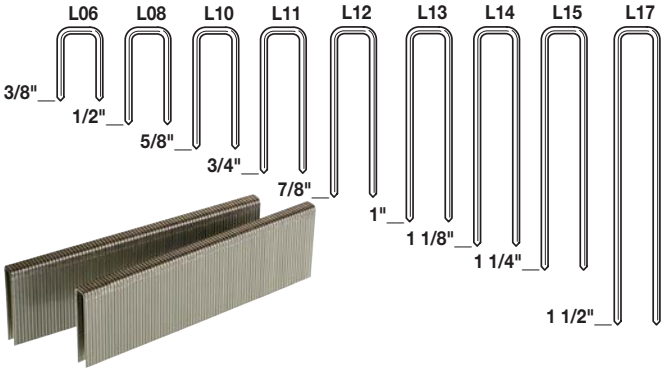

> For cabinets, casebacks, drawers, upholstery, soffits, underlayment, lattice and insulative sheathing
> Chisel point; Collation: glue
> Width: .050; Thickness: .044
> Material: Steel; Coating: Sencote

Length	Senco No.	Finish	Item No.	Packing
3/4"	L11BRB	bright	006.50.715	5,000 pcs.
1"	L13BRBN	bright	006.50.130	5,000 pcs.
1 1/8"	L14BRB	bright	006.50.140	5,000 pcs.
1 1/4"	L15BRB	bright	006.50.180	5,000 pcs.
1/2"	L08BAB	galvanized	006.50.716	10,000 pcs.
3/8"	L06BAB	galvanized	006.50.719	10,000 pcs.
5/8"	L10BABN	galvanized	006.50.717	5,000 pcs.
3/4"	L11BAB	galvanized	006.50.710	5,000 pcs.
7/8"	L12BAB	galvanized	006.50.718	5,000 pcs.
1"	L13BABN	galvanized	006.50.711	5,000 pcs.
1 1/8"	L14BAB	galvanized	006.50.712	5,000 pcs.
1 1/4"	L15BAB	galvanized	006.50.713	5,000 pcs.
1 1/2"	L17BAB	galvanized	006.50.714	5,000 pcs.

→ 18 Ga. 3/8" Crown Medium Wire

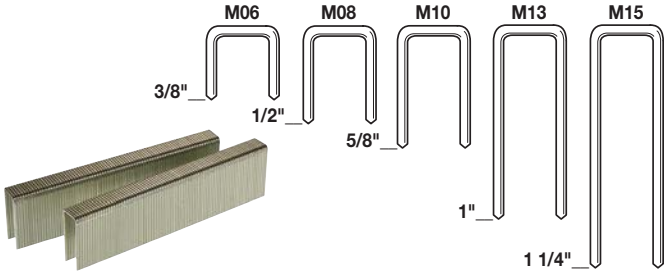

> For cabinets, casebacks, drawers, upholstery, soffits, underlayment, lattice and insulative sheathing
> Chisel point; Collation: glue
> Width: .058; Thickness: .044
> Material: Steel, galvanized: Coating: Sencote

Length	Senco No.	Item No.	Packing
5/8"	M10BABN	006.50.190	5,000 pcs.
1"	M13BAB	006.50.100	5,000 pcs.
1 1/4"	M15BAB	006.50.101	10,000 pcs.

Dimensional data not binding. Dimensions in mm, inches are approximate. We reserve the right to alter specifications without notice.

SENCO®

→ 22 Ga. 3/8" Crown Fine Wire

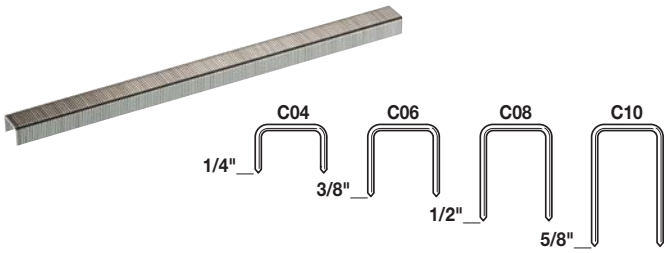

> Chisel point
> Width: .030; Thickness: .0215
> Material: Steel, galvanized: Coating: Sencote

Length	Senco No.	Item No.	Packing
1/4"	C04BAAP	006.50.081	35,000 pcs.
1/2"	C08BAAP	006.50.012	35,000 pcs.
5/8"	C10BAAP	006.50.014	27,000 pcs.
3/8"	C06BAAP	006.50.070	50,000 pcs.

→ 25 Ga. 1" Crown Corrugated Fastener

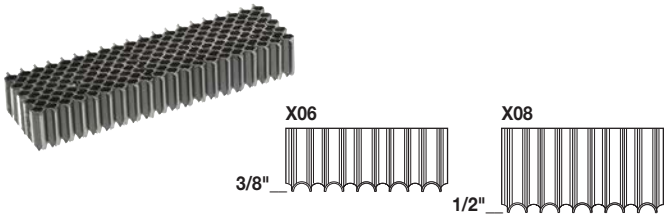

> Chisel point
> Thickness: .020
> Material: Steel, bright

Length	Senco No.	Item No.	Packing
3/8"	X06NRA	006.50.160	5,000 pcs.
1/2"	X08NRA	006.50.161	4,000 pcs.

Dimensional data not binding. Dimensions in mm, inches are approximate. We reserve the right to alter specifications without notice.

SENCO®

→ 1/4" Crown, 1 5/8" Medium Wire Stapler

> For fastener series 18 gauge L wire
> Durable and ultra-light
> Metal cylinder
> Oil-free design
> Selective actuation trigger
> Rotatable rear exhaust
> Swivel air plug
> Over-mold rubber comfort grip
> Adjustable depth-of-drive and belt hook
> L x H: 9 1/4" x 6"
> Material: Magnesium

Senco No.	Item No.
SLS18MG	006.50.250

Supplied With
Case and wrench

→ 1/4" Crown, 1 1/2" Fine and Medium Wire Stapler

> For fastener series 18 gauge L wire
> Ergonomically designed comfort grip
> Never-Lube® design means easier maintenance
> No-mar pad
> Heavy-duty components
> Adjustable depth-of-drive
> Ultra-light (2.5 lbs.)
> L x H: 12" x 8 1/2"
> Material: Magnesium

Senco No.	Item No.
SLS20XP-L	006.50.260

→ 1/4" Crown, 1 1/2" Medium-Heavy Wire Stapler

> For fastener series 18 gauge L wire
> Easy-load, easy-clear system
> Quiet operation
> 1" lip to get into tight spaces
> Never-Lube® design means easier maintenance
> Heavy-duty components
> Adjustable depth-of-drive
> L x H: 12 3/8" x 9 1/2"
> Material: Magnesium

Senco No.	Item No.
SKSXP-L	006.50.270

→ 3/8" Crown Fine Wire Stapler

> For fastener series 22 gauge C wire
> Heavy-duty steel cap
> Short trigger stroke
> Real exhaust keeps oil off fabric
> Automatic models have adjustable speed triggers
> L x H: 8 9/16" x 6 9/16"
> Material: Magnesium

Senco No.	Item No.
SFT10XP	006.50.330

Dimensional data not binding. Dimensions in mm, inches are approximate. We reserve the right to alter specifications without notice.

SENCO®

→ Industrial Air Hose

> Handles up to 250 psi working pressure
> 4 to 1 working pressure
> Oil resistant nitrile tube
> Tough, flexible neoprene cover
> Braided textile reinforcing for maximum strength and kink resistance
> Temperature range: -40° F–200° F
> Hose size: 1/4" x 50'
> Material: Rubber; Color: gray

Senco No.	Item No.
PC0064	006.50.971

→ Proflex™ Air Hose

> Flexible in cold weather
> Temperature range: -40° F – 150° F
> Oil and fuel resistant
> Working pressure: 250 psi
> With MPT threaded ends
> Hose size: 1/4" x 50'
> Material: Polyurethane; Color: red

Senco No.	Item No.
PC0977	006.50.970

→ Pneumatic Tool Oil

> Premium grade oil formulated with high-quality paraffin distillate stocks
> Contains a carefully balanced rust and oxidation inhibitor with an anti-foaming additive

Size	Item No.
8 oz.	006.50.980

Dimensional data not binding. Dimensions in mm, inches are approximate. We reserve the right to alter specifications without notice.

5" Aluminum Oxide Paper Discs

> Individual tabbed discs include release paper liner which stops grit or dust contamination for improved shelf life
> Discs are open coat and include a stearate coating to resist loading
> C weight backing is strong, durable and tough PSA for improved edge wear
> Ideal for sanding paint, primer, metal, wood, fiberglass and plastic
> Fast cut, long life and consistent finish
> Pres-Loc hook and loop fastening system allows for quick changes and decreased downtime

Supplied With
100 discs/pkg.

→ PSA

Grit	Rolls 5" - No Holes	Tabbed 5" - No Holes	5" - 5 Holes	5" - 8 Holes	5" - 9 Holes	Cloth Back 5" - No Holes
80	005.32.081	005.33.160	005.33.170	005.33.250	005.33.320	–
100	005.32.082	005.33.161	005.33.171	005.33.251	–	–
120	005.32.083	005.33.162	005.33.172	005.33.252	005.33.322	005.33.352
150	005.32.084	005.33.163	005.33.173	005.33.253	005.33.323	–
180	005.32.085	005.33.164	–	005.33.254	005.33.324	–
220	005.32.086	005.33.165	–	005.33.255	005.33.325	–
240	005.32.087	–	–	–	–	–
320	005.32.088	005.33.168	–	–	–	–
400	005.32.089	–	005.33.176	–	–	–

→ Hook-N-Loop

Grit	5" - No Holes	5" - 5 Holes	5" - 8 Holes	5" - 9 Holes
60	–	005.33.199	005.33.889	–
80	005.33.180	005.33.190	005.33.890	005.33.340
100	005.33.181	005.33.191	005.33.891	005.33.341
120	005.33.182	005.33.192	005.33.892	005.33.342
150	005.33.183	005.33.193	005.33.893	005.33.343
180	005.33.184	005.33.194	005.33.894	005.33.344
220	005.33.185	005.33.195	005.33.895	005.33.345
240	–	–	005.33.896	–
280	005.33.187	–	–	–
320	005.33.188	005.33.198	005.33.898	005.33.348
400	005.32.268	–	–	–

Dimensional data not binding. Dimensions in mm, inches are approximate. We reserve the right to alter specifications without notice.

6" Aluminum Oxide Paper Discs

> Individual tabbed discs include release paper liner which stops grit or dust contamination for improved shelf life
> Discs are open coat and include a stearate coating to resist loading
> C weight backing is a strong, durable and tough PSA for improved edge wear
> Ideal for sanding paint, primer, metal, wood, fiberglass and plastic
> Fast cut, long life and consistent finish
> Pres-Loc hook and loop fastening system allows for quick changes and decreased downtime

Supplied With
100 discs/pkg.

→ PSA

Grit	Rolls 6" - No Holes	Tabbed 6" - No Holes	6" - 6 Holes	6" - 9 Holes
80	005.32.091	005.33.450	–	005.33.360
100	005.32.092	005.33.451	–	005.33.361
120	005.32.093	005.33.452	005.33.442	005.33.362
150	005.32.094	005.33.453	005.33.443	005.33.363
180	005.32.095	005.33.454	005.33.444	005.33.364
220	005.32.096	005.33.455	005.33.445	005.33.365
240	–	–	005.33.446	005.33.366
320	005.32.098	–	005.33.447	005.33.368
400	005.32.099	–	–	–

→ 4 1/2" Alumnum Oxide PSA Rolls

> C weight paper backing
> Designed for sanding wood, metal, paint, fiberglass and plastic
> For use with hand blocks, jitterbug sanders or body files
> Special stearate coating resists loading

Grit	Item No.
80	005.32.670
100	005.32.671
120	005.32.672
150	005.32.506
220	005.32.673

Supplied With
1-10 yard roll

→ Hook-N-Loop

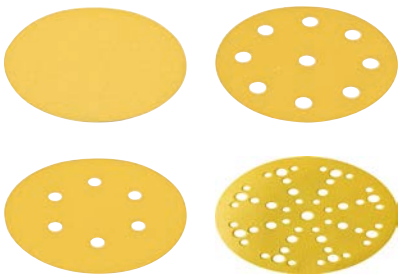

Grit	6" - No Holes	6" - 6 Holes	6" - 9 Holes	6" - 49 Holes
60	–	–	–	005.34.580
80	005.32.270	–	005.33.370	005.34.581
100	005.32.271	005.33.431	005.33.371	005.34.582
120	005.32.272	005.33.432	005.33.372	005.34.583
150	005.32.273	005.33.433	005.33.373	005.34.584
180	005.32.274	005.33.434	005.33.374	005.34.585
220	005.32.275	005.33.435	005.33.375	005.34.586
240	–	–	–	005.34.587
280	–	–	005.33.377	005.34.588
320	005.32.277	005.33.437	005.33.378	005.34.589
400	–	–	–	005.34.590
500	–	–	–	005.34.591
600	–	–	–	005.34.592
800	–	–	–	005.34.593
1000	–	–	–	005.34.594
1200	–	–	–	005.34.595

Dimensional data not binding. Dimensions in mm, inches are approximate. We reserve the right to alter specifications without notice.

Sioux Pneumatic Random Orbit Sanders

> Premium “Signature Line” series sander engineered for user comfort and reduced fatigue
> One-piece motor is precision machined with counter-balance and dual vibration dampers for dramatically reduced vibration
> Asymmetrical palm-shaped soft textured grip rotates through 24 positions in 15° increments so any user (small or large hands / left or right-handed) can adjust to a comfortable working position
> Naturally contoured power lever fits more comfortably in the palm
> One of the easiest motors to install and service
> Specifications: Power: 0.25 hp
Free Speed: 12,000 RPM
Air Consumption: 13 SCFM
Sound Level: 81 dBA
Spindle Thread: 5/16" – 24
Orbit Diameter: 3/16"

→ Palm Sander

> Size: 5
> Material: Foam

Type	Item No.
Hook-N-Loop	005.32.635
PSA	005.32.636

→ Interface Pads

> Size: 5
> Material: Foam

Type	# of Holes	Item No.
Hook-N-Loop	5	005.33.261
PSA	0	005.33.265

→ Conversion Pads

> PSA to Hook-N-Loop
> Material: Foam

Size	# of Holes	Item No.
5	0	005.33.840
5	5	005.33.841
5	8	005.33.842
6	0	005.33.850

→ 5” for PSA Adhesive Discs

Version	Item No.
Without holes	005.18.050
With holes and hose connection	005.18.051

→ 5” for Hook-N-Loop Discs, Without Holes

	Item No.
	005.18.056

→ Back-Up Pads, PSA

> 15/16-24 Shank

Size	# of Holes	Item No.
5	0	005.32.131
6	0	005.32.132

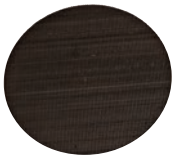

> Hook-N-Loop

Size	# of Holes	Item No.
5	0	005.32.620
5	40	005.32.622

Dimensional data not binding. Dimensions in mm, inches are approximate. We reserve the right to alter specifications without notice.

5" Premium Aluminum Oxide FilmBac Discs

> Individual tabbed discs include release paper liner which stops grit or dust contamination for improved shelf life
> Discs are open coat and include a sterate coating to resist loading
> C weight backing is a strong, durable and tough PSA for improved edge wear
> Ideal for sanding paint, primer, metal, wood, fiberglass and plastic
> Fast cut, long life and consistent finish
> Pres-Loc hook and loop fastening system allows for quick changes and decreased downtime

Supplied With
100 discs/pkg.

→ PSA

Grit	5" - No Holes	5" - 5 Holes	5" - 9 Holes
80	005.33.220	005.33.230	–
100	005.33.221	005.33.231	005.33.311
120	005.33.222	005.33.232	–
150	005.33.223	005.33.233	005.33.313
180	005.33.224	005.33.234	005.33.314
220	005.33.225	005.33.235	005.33.315
320	005.33.227	005.33.237	–
400	005.33.630	005.33.640	005.33.660
500	–	–	–
600	005.33.631	–	–
800	005.33.632	–	–
1000	005.33.633	–	–
1200	005.33.634	–	–
1500	005.33.635	–	–
2000	005.33.636	–	–

→ Hook-N-Loop

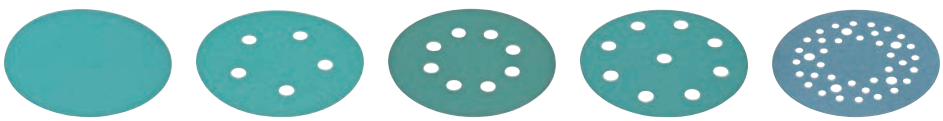

Grit	5" - No Holes	5" - 5 Holes	5" - 8 Holes	5" - 9 Holes	5" - 40 Holes
40	–	–	–	–	005.34.500
60	–	–	005.33.298	–	005.34.501
80	005.33.200	005.33.210	005.33.290	005.33.330	005.34.502
100	005.33.201	005.33.211	005.33.291	005.33.331	005.34.503
120	005.33.202	005.33.212	005.33.292	005.33.332	005.34.504
150	005.33.203	005.33.213	005.33.293	005.33.333	005.34.505
180	005.33.204	005.33.214	005.33.294	005.33.334	005.34.506
220	005.33.205	005.33.215	005.33.295	005.33.335	005.34.507
240	005.33.206	–	005.33.296	005.33.336	005.34.508
320	005.33.207	005.33.217	005.33.297	005.33.337	005.34.509
400	005.33.460	005.33.470	005.33.480	005.33.490	005.34.510
500	–	–	–	–	005.34.511
600	005.33.461	005.33.471	005.33.481	005.33.491	005.34.512
800	005.33.462	005.33.472	–	–	005.34.513
1000	005.33.463	005.33.473	005.33.483	–	005.34.514
1200	005.33.464	005.33.474	005.33.484	–	005.34.515
1500	005.33.465	–	005.33.485	–	005.34.516
2000	–	005.33.476	–	005.33.496	005.34.517

Dimensional data not binding. Dimensions in mm, inches are approximate. We reserve the right to alter specifications without notice.

6" Premium Aluminum Oxide FilmBac Discs

> Individual tabbed discs include release paper liner which stops grit or dust contamination for improved shelf life
> Discs are open coat and include a sterate coating to resist loading
> Ideal for sanding paint, primer, metal, wood, fiberglass and plastic
> Fast cut, long life and consistent finish
> Pres-Loc hook and loop fastening system allows for quick changes and decreased downtime
> FilmBac is a tough, polyester film backing that is strong and durable lasting 3 to 4 times longer than standard paper discs
> Ultimate tear resistance and sanding uniformity for consistent sand scratch depth throughout the life of the disc

Supplied With
100 discs/pkg.

→ PSA

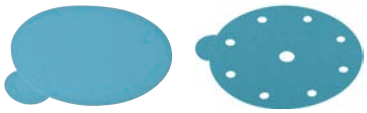

Grit	6" - No Holes	6" x 9 Holes
80	005.33.410	005.33.380
100	005.33.411	005.33.381
120	005.33.412	005.33.382
150	005.33.413	005.33.383
180	005.33.414	005.33.384
220	005.33.415	005.33.385
240	–	005.33.386
320	005.33.417	005.33.388
400	005.33.670	–

→ Hook-N-Loop

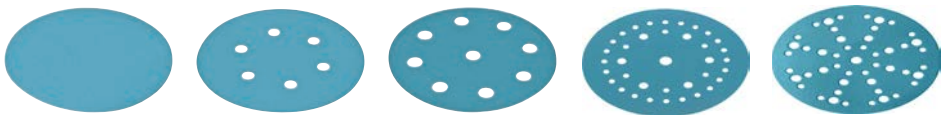

Grit	6" - No Holes	6" - 6 Holes	6" - 9 Holes	6" - 36 Holes	6" - 49 Holes
80	005.33.420	005.33.300	005.33.390	005.34.551	005.34.560
100	005.33.421	005.33.301	005.33.391	005.34.552	005.34.561
120	005.33.422	005.33.302	005.33.392	005.34.553	005.34.562
150	005.33.423	005.33.303	005.33.393	005.34.554	005.34.563
180	005.33.424	–	005.33.394	005.34.555	005.34.564
220	005.33.425	005.33.305	005.33.395	005.34.556	005.34.565
240	005.33.426	–	005.33.396	005.34.557	005.34.566
320	005.33.427	–	005.33.397	005.34.558	005.34.567
400	–	–	005.33.620	–	005.34.568
600	–	–	005.33.621	–	005.34.569
800	–	–	005.33.622	–	005.34.570
1000	–	–	–	–	005.34.571
1200	–	–	005.33.624	–	005.34.572
1500	–	–	005.33.625	–	005.34.573
2000	–	–	005.33.626	–	005.34.574

Dimensional data not binding. Dimensions in mm, inches are approximate. We reserve the right to alter specifications without notice.

Premiere Red

> P-graded, heat-treated aluminum oxide abrasive
> Superior bond system
> B-weight PSA paper backing
> Special undyed stearate oversize
> Link disc roll design

Benefits
> 30% to 50% faster cut rate than other paper discs
> Uniform scratch pattern
> Improved grain adhesion
> Industry's longest disk life
> Superior resistance to delamination and tearing
> Easy application and removal from pad
> No pigment transfer
> Easy dispensing
> Minimizes storage space
> Reduces cardboard waste
> Protects individual rolls
> Superior load resistance

Application
Best choice for sanding all paints, primers, plastics and fiberglass. Also suited for sealer and wash coats in wood furniture.

Supplied With
100 discs/pkg.; 4 per polybag

→ PSA

Grit	Rolls 5" - No Holes	Rolls 5" - 5 Holes	Tabbed 5" - No Holes	Rolls 6" - No Holes
80	005.32.310	005.32.180	–	005.32.330
100	005.32.311	005.32.181	005.33.931	005.32.331
120	005.32.312	005.32.182	005.33.932	005.32.332
150	005.32.313	005.32.183	005.33.933	005.32.333
180	005.32.314	005.32.184	005.33.934	005.32.334
220	005.32.315	005.32.185	005.33.935	005.32.335
240	005.32.316	–	–	–
280	005.32.317	–	–	–
320	005.32.318	–	–	–
400	005.32.319	–	–	–

→ Hook-N-Loop

Grit	5" - No Holes	5" - 5 Holes	5" - 8 Holes	6" - No Holes	6" - 6 Holes
80	005.32.220	005.32.280	005.32.192	–	005.32.290
100	005.32.221	005.33.141	005.32.193	005.32.241	005.32.291
120	005.32.222	005.32.281	005.32.194	005.32.242	005.32.292
150	005.32.223	005.33.143	005.32.195	005.32.243	005.32.293
180	005.32.224	005.32.282	–	005.32.244	005.32.294
220	005.32.225	005.32.283	005.32.197	005.32.245	005.32.295
240	–	–	–	–	–
320	005.32.228	005.32.284	–	–	–

Dimensional data not binding. Dimensions in mm, inches are approximate. We reserve the right to alter specifications without notice.

Silicon Carbide

> Durable A, B & C weight paper allows for good grain retention and moderate flexibility
> Tough bond system with an Anti-Load top coat providing properties and resultant fast cut rates and long life
> Special water resistant resins allow for tough bond and excellent grain retention
> 80–400 grit for PSA discs

Application
> Excellent for whitewood sanding between wash, sealer and lacquer coats
Machine sanding metal primer coats and between finish coats

Benefits
Why Silicon Carbide Products?
> Primarily used where finish sanding is needed between sealer coats
> The sharp nature of the silicon carbide mineral allows for fast cut rates and fine finish results but not necessarily the longest life
> Cuts quickly through painted surfaces and plastics

Supplied With
100 discs per roll/pkg.

→ PSA

Grit	5" - No Holes Rolls	5" - No Holes Tabbed	5" - 9 Holes Tabbed	6" - 9 Holes Tabbed
80	005.32.350	005.33.700	005.33.730	005.33.760
100	005.32.351	005.33.701	005.33.731	005.33.761
120	005.32.352	005.33.702	005.33.732	005.33.762
150	005.32.353	005.33.703	005.33.733	005.33.763
180	005.32.354	005.33.704	005.33.734	005.33.764
220	–	005.33.705	005.33.735	005.33.765
240	–	–	005.33.736	005.33.766
320	005.32.357	005.33.708	005.33.738	005.33.768
400	–	–	005.33.739	005.33.769

→ Hook-N-Loop

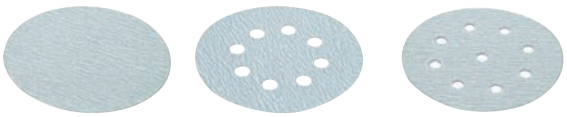

Grit	5" - No Holes	5" - 8 Holes	5" - 9 Holes
80	005.33.770	–	005.33.800
100	005.33.771	005.33.791	005.33.801
120	005.33.772	005.33.792	005.33.802
150	005.33.773	005.33.793	005.33.803
180	005.33.774	005.33.794	–
220	005.33.775	005.33.795	005.33.805
280	005.33.777	–	–
320	005.33.778	005.33.798	005.33.808
400	005.33.779	005.33.799	–

→ Hook-N-Loop

Grit	6" - No Holes	6" - 6 Holes	6" - 9 Holes
80	–	005.33.820	–
100	–	005.33.821	005.33.831
120	–	005.33.822	005.33.832
150	–	–	005.33.833
320	–	005.33.828	–
400	005.33.819	–	005.33.839

Dimensional data not binding. Dimensions in mm, inches are approximate. We reserve the right to alter specifications without notice.

Discs, Pads and Sheets

→ Aluminum Oxide Fabramesh Discs

Grit	5" - No Holes	6" - No Holes
80	005.33.540	005.33.560
100	005.33.541	005.33.561
120	005.33.542	005.33.562
150	005.33.543	005.33.563
180	005.33.544	005.33.564
220	005.33.545	005.33.565
240	005.33.546	005.33.566
320	005.33.547	005.33.567
400	005.33.548	005.33.568
600	005.33.550	005.33.570

Supplied With
25 discs / pkg.

→ Aluminum Oxide Fabrafoam Pads

Grit	5" - No Holes	6" - No Holes
240	005.33.500	–
360	005.33.501	005.33.521
500	005.33.502	005.33.522
800	005.33.503	005.33.523
1000	005.33.504	005.33.524
1500	005.33.506	005.33.526
2000	005.33.508	005.33.528
2500	005.33.509	005.33.529
3000	005.33.510	005.33.530

Supplied With
25 discs / pkg.

→ Ceramic Blue Aluminum Oxide Discs

> Our “cool blue” discs provide amazing performance while generating less heat than competing products
> Tough ceramic aluminum abrasive provides improved cut and performance rates exceeding 30–50%
> C weight backing is strong and durable

	PSA	Hook-N-Loop	
Grit	5" x 5 Holes	5" x 5 Holes	6" x 49 Holes
80	005.34.400	005.34.410	005.34.600
100	005.34.401	005.34.411	005.34.601
120	005.34.402	005.34.412	005.34.602
150	–	–	005.34.603
180	–	–	005.34.604
220	–	–	005.34.605
240	–	–	005.34.606
320	–	–	005.34.607
400	–	–	005.34.608
600	–	–	005.34.609

Supplied With
100 discs/pkg.

→ Delta Hook N’ Loop Vacuum Sheets

> Aluminum Oxide, gold
> B weight
> 7 holes

Grit	
60	005.32.900
80	005.32.880
100	005.32.881
120	005.32.882
150	005.32.883
180	005.32.884
220	005.32.885
240	005.32.886
280	005.32.887
320	005.32.888
400	005.32.889
600	005.32.890
800	005.32.901
1000	005.32.902
1200	005.32.903

Supplied With
200 sheets/pkg.

Dimensional data not binding. Dimensions in mm, inches are approximate. We reserve the right to alter specifications without notice.

Portable Belts

→ Resin Cloth Open

> Zirconia alumina abrasive
> Y-weight cotton backing
> Open coat
> Butt tape joint
> PSA backing
> Packaged in convenient, durable contractor packs

Benefits
> Aggressive, rapid cut rate
> Extended life
> Reduced loading
> Reversible, excellent durability
> Job specific labeling; easy product identification

Application
> Excellent for finishing wood and non-metallic materials

Note
Special sizes available upon request.

> 3" × 21"

Grit	Item No.
36	005.32.650
50	005.32.651
60	005.32.655
80	005.32.652
120	005.32.653

> 3" × 24"

Grit	Item No.
36	005.32.540
50	005.32.541
60	005.32.654
80	005.32.542
120	005.32.543

> 4" × 24"

Grit	Item No.
36	005.32.530
50	005.32.531
60	005.32.656
80	005.32.532
100	005.32.534
120	005.32.533

Supplied With
5 pcs./pkg.

→ Aluminum Oxide Resin Cloth

> Aluminum oxide abrasive
> Full resin bond system
> X-weight poly/cotton tap splice backing
> Butt tape joint

Benefits
> Aggressive, rapid cut rate
> Extended life
> Reduced loading
> Reversible, excellent durability
> Job specific labeling; easy product identification

Application
> Ideal for operation on sanders requiring a belt specification that does not generate heat, but is capable of sanding a variety of materials
> Open coat for fast stock removal and reduced loading

> 4" × 24"

Grit	Item No.
40	005.32.041
50	005.32.042
60	005.32.043
80	005.32.044
100	005.32.045
120	005.32.046
150	005.32.047
220	005.32.048

Grit	3" x 18"	3" x 21"	3" x 24"
40	–	005.32.021	005.32.031
50	005.32.012	005.32.022	005.32.032
60	005.32.013	005.32.023	005.32.033
80	–	005.32.024	005.32.034
100	005.32.015	005.32.025	005.32.035
120	–	005.32.026	005.32.036
150	–	005.32.027	005.32.037
220	–	–	005.32.038

Supplied With
10 pcs./pkg.

Dimensional data not binding. Dimensions in mm, inches are approximate. We reserve the right to alter specifications without notice.

Portable Belts

> Zirconia alumina abrasive
> Y-weight cotton backing
> Open coat
> Resists loading

→ Resin Cloth Open

> 3" × 21"

Grit	Item No.
60	005.32.028
80	005.32.029
120	005.32.030

> 3" × 24"

Grit	Item No.
60	005.32.056
80	005.32.057
100	005.32.058
120	005.32.059

> 4" × 24"

Grit	Item No.
60	005.32.008
80	005.32.009

Supplied With 5 pcs./pkg.

→ Stationary Belts

> K35 narrow belts
> For general purpose wood sanding
> Aluminum oxide
> X weight resin cloth
> Open coat

Grit	Size	Item No.
120	6" x 245"	005.32.704
120	6" x 280"	005.32.702
150	6" x 280"	005.32.703

Supplied With 10 pcs./pkg.

Aluminum Oxide Wide Belts

> P-graded light brown aluminum oxide abrasive
> Full resin bond system
> X-weight poly/cotton backing

Benefits
> Uniform scratch pattern
> Increased strength
> Resists loading

Application
> Applications include finishing of wood and non-ferrous metals

Note
Special size wide belts available. Please inquire.

→ Resin Cloth Open

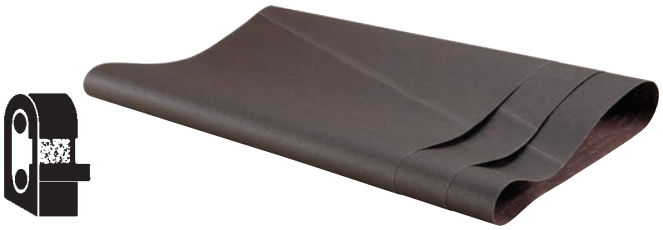

> 37" × 60"

Grit	Item No.	Belts/Pkg.
60	005.32.061	3
80	005.32.062	3
100	005.32.063	5
120	005.32.064	5
150	005.32.065	5
180	005.32.066	5

> 37" × 75"

Grit	Item No.	Belts/Pkg.
60	005.32.071	3
80	005.32.072	3
100	005.32.073	5
120	005.32.074	5
150	005.32.075	5
180	005.32.076	5
220	005.32.078	5
320	005.32.080	5

> 43" × 75"

Grit	Item No.	Belts/Pkg.
24	005.32.960	3
36	005.32.961	3
50	005.32.962	3
60	005.32.963	3
80	005.32.964	3
100	005.32.965	5
120	005.32.966	5
150	005.32.967	5
180	005.32.968	5
220	005.32.969	5

Dimensional data not binding. Dimensions in mm, inches are approximate. We reserve the right to alter specifications without notice.

Aluminum Oxide Dri-Lube Resin Paper

> P-graded, heat-treated aluminum oxide abrasive
> Resin bond
> Heavy B-weight paper backing
> Unique anti-loading agent
> PSA backing

Benefits
> Unequalled cut and life with consistent finish
> No pigment transfer
> Excellent pliability and tear resistance
> Superior load resistance
> Easy application and removal

Application
> Best choice for paint, primers, plastics, fiberglass, wood, and sealer sanding

PREMIER RED

→ Open Stick-On Sheet Rolls

> 4 1/2" × 10 Yards

Grit	Item No.
80	005.32.510
120	005.32.512
150	005.32.513
180	005.32.514
220	005.32.515
320	005.32.516

→ Open Stick-On Sheet Rolls

> 2 3/4"

Grit	Length	Item No.
80	25 Yards	005.32.101
100	30 Yards	005.32.102
120	30 Yards	005.32.103
150	45 Yards	005.32.104
180	45 Yards	005.32.105
220	45 Yards	005.32.106
240	45 Yards	005.32.107
400	45 Yards	005.32.109

Dimensional data not binding. Dimensions in mm, inches are approximate. We reserve the right to alter specifications without notice.

Aluminum Oxide Dri-Lube Sheets

→ Resin Paper Open

> P-graded, heat-treated aluminum oxide abrasive
> Resin bond system
> B-weight paper backing
> Special undyed stearate oversize

Benefits
> 30% to 50% faster cut rate
> Uniform scratch pattern
> No pigment transfer
> Excellent grain adhesion
> Superior resistance to delamination and tearing
> Superior load resistance

Application
> Ultimate choice for machine and hand sanding of paints, primers, light metals, and basecoat/clear coat paints

PREMIER RED

> 9" × 11"

Grit	Item No.	Sheets/Pkg.
80	005.32.400	50
100	005.32.401	100
120	005.32.402	100
150	005.32.403	100
180	005.32.404	100
220	005.32.405	100
240	005.32.406	100
280	005.32.407	100
320	005.32.408	100
400	005.32.409	100
600	005.32.410	100
1000	005.32.412	100

→ Paper Open

> Gold aluminum oxide abrasive
> Stearated

Benefits
> Fast cut, long life with consistent finish
> Improved load resistance
> Increased flexibility

Application
> For hand and machine sanding of paint, primer, plastics and fiberglass, as well as whitewood, clean-up, and repair

GOLD

> 9" × 11"

Grit	Weight	Item No.	Sheets/Pkg.
80	C	005.32.420	50
100	C	005.32.421	100
120	C	005.32.422	100
150	B	005.32.423	100
180	B	005.32.424	100
220	B	005.32.425	100
240	B	005.32.426	100
280	B	005.32.427	100
320	B	005.32.428	100
400	B	005.32.429	100
600	B	005.32.430	100
800	B	005.32.431	100
1000	B	005.32.432	100

Dimensional data not binding. Dimensions in mm, inches are approximate. We reserve the right to alter specifications without notice.

Silicon Carbide Dri-Lube Sheets and Hand Pads

→ Paper Open Sheets

> Silicon carbide abrasive
> Stearated
> Heavy A or B weight paper

Benefits
> Sharp cut, excellent finish
> Strong, minimum edge wear
> Tear resistant

Application
> For hand and machine sanding paint and primer, as well as whitewood clean-up and sealer sanding.

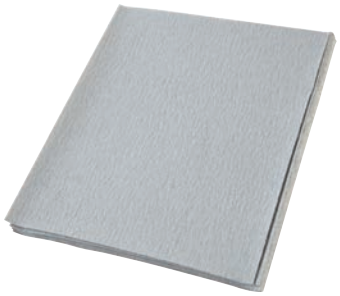

Grit	Weight	Item No.	Sheets/Pkg.
100	A	005.32.111	100
120	A	005.32.112	100
150	A	005.32.113	100
180	A	005.32.114	100
220	A	005.32.115	100
240	A	005.32.116	100
280	A	005.32.117	100
320	A	005.32.118	100
400	B	005.32.119	100

→ Sponge Hand Pad

> Non-woven nylon, low density product impregnated with abrasive grain
> Numerous applications

Benefits
> Excellent conformability and flexibility
> Replacement for steel wool and wire brushes
> Easy to fold

W × H × D: 6" × 9" × 1/4"

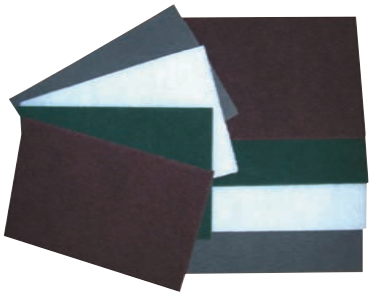

> For general clean-up, light primer rub down and paint overspray removal

Grit/Abrasive	white
Non-abrasive	005.32.161

> For denibbing between finish coats as well as lacquer rubbing

Grit/Abrasive	gray
Ultra fine (600 grit) silicon carbide	005.32.163

> For cleaning, deburring, corrosion and oxidation removal

Grit/Abrasive	maroon
Very fine aluminum oxide fast cut	005.32.166

> For heavy-duty cleaning and for removal of paint, rust and corrosion

Grit/Abrasive	green
General purpose	005.32.167

Supplied With
20 pads/pkg.

Dimensional data not binding. Dimensions in mm, inches are approximate. We reserve the right to alter specifications without notice.

Sponges and Pads

→ EZ Touch Sanding Sponge

> Comfortable design
> Washable
> Long lasting
> Can be used wet or dry
> For use on wood, metal, fiberglass, composites, and plastic
> Works on primed stained, sealed, or painted surfaces
> W × H × D: 4 1/2" × 5 1/2" × 3/16"
> Material: Medium, fine, and super fine: Aluminum Oxide
Ultra fine and micro fine: Silicon Carbide

Grading	Grit	Item No.
Medium	60	005.32.175
Fine	100	005.32.176
Super fine	180	005.32.177
Ultra fine	220	005.32.178
Micro fine	280	005.32.179
Micro fine	320	005.32.150

→ Four-Sided Foam Sanding Sponge

> High cutting power and long lifespan
> Coated on 4 sides
> Ideal for surfaces and profiles
> Uniform surface finishing
> High quality foam provides a flexible, non-cracking pad
> W × H × D: 2 5/8" × 3 3/4" × 1"
> Material: Aluminum Oxide

Grit	Item No.
60	005.32.144
80	005.32.145
100	005.32.146
120	005.32.147
180	005.32.148
220	005.32.149

→ Flexible Sanding Sponge

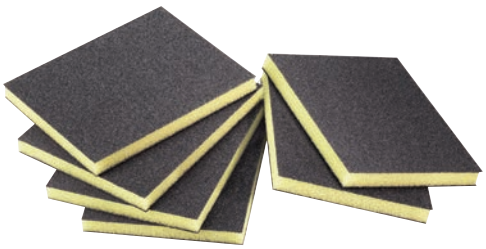

> Ideal for sanding sealer and wash coats in wood furniture and cabinets, and for touch-up or repair of primer
> W × H × D: 4 3/4" × 3 3/4" × 1/2"
> Material: Silicon Carbide

Grading	Grit	Item No.
Fine	220	005.32.173
Medium	150	005.32.172
Coarse	100	005.32.171

→ FoamBac Gold Sanding Pad Roll

> Premium Gold Resin paper
> Durable and flexible
> Perfect for hand sanding without leaving marks
> Use on wood, metal, composites, primers, sealers and top coats
> Great cut and life
> W x L: 4 1/2" x 82' perforated every 5 1/2"
> Material: Aluminum Oxide; Backing: Urethane Foam; Color: gold

Grit	Item No.
80	005.32.370
100	005.32.371
120	005.32.372
150	005.32.373
180	005.32.374
220	005.32.375
240	005.32.376
280	005.32.377
320	005.32.378
400	005.32.379
500	005.32.380
600	005.32.381
800	005.32.382
1000	005.32.383

Supplied With
178 sheets per roll

Note
Specially designed dispenser box for protection and easy sheet removal.

Dimensional data not binding. Dimensions in mm, inches are approximate. We reserve the right to alter specifications without notice.

Häfele

→ Premium Grade, PVA Adhesive

> Type 2 is a 50% solids polyvinyl acetate emulsion containing reactive groups
> A specially designed adhesive with increased water resistance, good heat resistance, good resistance to static load and very fast curing on RF machines
> Works well on hot and cold-press applications
> Excellent storage stability and easy clean up
> Passes Type II water-resistance specification
> FDA approved for indirect food contact
> Higher Viscosity: Most wood workers prefer these higher viscosities with minimal run and drip

Special Features
> Excellent Water Resistance
> Good Heat Resistance
> Excellent Cleanup
> Fast Setting

Typical Physical Properties	
Appearance	white liquid
Solids, %	50
Viscosity, cps	6000*
pH	2.5-3.5
Freeze-Thaw Stable	protect from freezing

Adhesive Application Properties	
Water Resistance	excellent
Heat Resistance	good
Cleanup	excellent
Resistance to Static Load	good

Size	Item No.
1 gallon (2 per case)	003.00.252
5 gallon	003.00.253
55 gallon	003.00.254

Note Meets ASTM D 4236

→ Empty Glue Bottle and Cap with Control Tip

Description	Item No.
16 oz. bottle	003.48.000
Cap with control tip	003.48.090

→ High Performance, Wood Adhesive

> High performance adhesive designed for assembly use where high wet tack and quick grab is needed
> Offers excellent storage stability and easy clean up
> Fast setting, bonds that are stronger than the wood
> Works well on wood, leather, MDF, particle board and most other porous materials
> Higher Viscosity: Most wood workers prefer these higher viscosities with minimal run and drip

Special Features
> Good Water Resistance
> Excellent Heat Resistance
> High Shear Strength
> Excellent Storage Stability
> Excellent Cleanup
> Excellent Mechanical Stability

End Uses
> General Assembly Work
> Clamp Carriers
> Cold Pressing

Typical Physical Properties	
Appearance	white liquid
Solids, %	45
Viscosity, cps	7600 - 8100*
pH	4.5
Weight/Gallon, lbs.	9.2
VOC	10.8 g/L
Freeze - Thaw Stable	fair
Chalk Point (F)	55 degrees

*Brookfield RVF #4 spindle, 20 RPM, 25 C

Adhesive Application Properties	
Water Resistance	good
Heat Resistance	excellent
Assembly Time	15 min
Wet Tack	excellent
Storage Stability	excellent
Cleanup	excellent
Shear Strength	high

Size	Item No.
1 gallon (2 per case)	003.00.250
5 gallon	003.00.251
55 gallon	003.00.256

Note
Meets ASTM D 4236

Dimensional data not binding. Dimensions in mm, inches are approximate. We reserve the right to alter specifications without notice.

Titebond®

→ Original Wood Glue

> Fast set shortens clamp time
> Excellent heat and solvent-resistance
> Excellent sandability
> Water clean-up
> Bonds wood, hardwood, high pressure laminates and particleboard

APPLICATION GUIDELINES
Application temperature: Above 50˚F.
Assembly time after glue application: 5 minutes (70˚F/50% RH)
Minimum required spread: 7 mils (typical)
Required clamping pressure: Enough to bring joints tightly together (generally, 30-80 psi for HPL, 100-150 psi for softwoods, 125-175 psi for medium woods and 175-250 psi for hardwoods).
Methods of application: Easily spread with a roller spreader or brush, or may be transferred to plastic bottles for finer gluing applications.
Cleanup: Damp cloth while glue is wet. Scrape off dried excess.

LIMITATIONS
Not intended for exterior use or where moisture is likely. For exterior applications use Titebond II Premium Wood Glue. Freezing may not affect the function of the product, but may cause it to thicken. Agitation should restore product to original form.
KEEP FROM FREEZING.

BOND STRENGTH ASTM D-905 (On Hard Maple)

Temperature	Strength psi	% wood failure
Room Temperature	3,600	77
150˚F Overnight	1,600	10

Size	Item No.
1 gallon	003.15.001
2.15 gallons	003.15.004
5 gallons	003.15.002

→ Premium Wood Glue

> Designed for exterior use
> Excellent heat and solvent-resistance
> Water clean-up
> Ideal for radio frequency (R-F) and hot press gluing systems
> FDA approved for indirect food contact (i.e. cutting boards)

APPLICATION GUIDELINES
Application temperature: Above 55˚F.
Assembly time after glue application: 5 minutes (70˚F/50% RH)
Minimum required spread: 7 mils (typical)
Required clamping pressure: Enough to bring joints tightly together (generally, 30-80 psi for HPL, 100-150 psi for softwoods, 125-175 psi for medium woods and 175-250 psi for hardwoods).
Methods of application: Easily spread with a roller spreader or brush, or may be transferred to plastic bottles for finer gluing applications.
Cleanup: Damp cloth while glue is wet. Scrape off dried excess.

LIMITATIONS
Passes ANSI/HPVA Type II water-resistance tests. Do not use for joints below the waterline or continuous submersion. Freezing may not affect the function of the product but may cause it to thicken. Agitation should restore product to original form. Because of variances in the surfaces of treated lumber, it is a good idea to test for adhesion.
KEEP FROM FREEZING.

BOND STRENGTH ASTM D-905 (On Hard Maple)

Temperature	Strength psi	% wood failure
Room Temperature	3,750	72
150˚F Overnight	1,750	6

Size	Item No.
1 gallon	003.15.011
2.15 gallons	003.15.016
5 gallons	003.15.012

Note
Chalk temperature indicates the lowest approximate temperature at which the glue, air or materials to be bonded may be to assure a good bond.

→ Empty Glue Bottle and Cap with Control Tip

Description	Item No.
16 oz. bottle	003.48.000
Cap with control tip	003.48.090

Dimensional data not binding. Dimensions in mm, inches are approximate. We reserve the right to alter specifications without notice.

Titebond®

→ Doweling L.V.

> For use with automatic doweling equipment
> Very low viscosity for better flow
> Excellent flow characteristics
> Fast setting

APPLICATION GUIDELINES
Application temperature: Above 45˚F.
Assembly time after glue application: 0–5 minutes (70˚F/50% RH)
Methods of application: Compatible with most European-made automatic doweling machines. See your machine's owner manual for details.
Cleanup: Damp cloth while glue is wet. Scrape off and sand dried excess.

LIMITATIONS
Titebond Doweling Glue L.V. is specifically formulated for use with European-made doweling equipment. Because of its extreme low viscosity, it is not well suited for other assembly applications. THIS PRODUCT SHOULD BE USED AS SUPPLIED AND NOT DILUTED. Not recommended for exterior use or where moisture is likely. Do not use when temperature, glue or materials are below 45°F. This product is NOT freeze/thaw stable. Read MSDS before use.
NOTE: STIR PRODUCT BEFORE USE TO ENSURE UNIFORMITY. KEEP FROM FREEZING.

→ Doweling Glue

> For use with American-made doweling equipment
> Excellent strength
> Fast setting
> Low viscosity for better flow
> Dries translucent

APPLICATION GUIDELINES
Application temperature: Above 50˚F.
Assembly time after glue application: 0–5 minutes (70˚F/50% RH)
Methods of application: Compatible with most American-made doweling machines. See your machines manual for details.
Cleanup: Damp cloth while glue is wet. Scrape off and sand dried excess.

LIMITATIONS
Titebond Doweling Glue is specifically formulated for use with American-made doweling equipment. Because of its low viscosity it is not well suited for other assembly applications. This product may be used as supplied or diluted with water by as much as 5% to improve flow. Not recommended for exterior use or where moisture is likely. Do not use when temperature, glue or materials are below 50°F. Freezing may not affect the function of the product but may cause it to thicken. Read MSDS before use.
NOTE: STIR PRODUCT BEFORE USE TO ENSURE UNIFORMITY. KEEP FROM FREEZING.

BOND STRENGTH ASTM D-905 (On Hard Maple)

Temperature	Strength psi	% wood failure
Room Temperature	2,711	32
150˚F Overnight	1,890	0

Size	Item No.
5 gallons	003.15.092

Size	Item No.
5 gallons	003.15.132

Dimensional data not binding. Dimensions in mm, inches are approximate. We reserve the right to alter specifications without notice.

Titebond®

→ Titebond® II Extend Wood Glue

> Passes Type II water-resistance testing
> Slower speed of set for longer open time
> Hot press and R-F compatible
> Heat and solvent-resistant
> Excellent sandability

APPLICATION GUIDELINES
Application temperature: Above 50˚F.
Assembly time after glue application: 15 minutes (70˚F/50% RH)
Minimum required spread: 7 mils (typical)
Required clamping pressure: Enough to bring joints tightly together (generally, 30–80 psi for HPL, 100–150 psi for softwoods, 125–175 psi for medium woods and 175–250 psi for hardwoods).
Methods of application: Easily spread with a roller spreader or brush, or may be transferred to plastic bottles for finer gluing applications.
Cleanup: Damp cloth while glue is wet. Scrape off dried excess.

LIMITATIONS
Do not use for joints below the waterline or continuous submersion. Freezing may not affect the function of the product but may cause it to thicken. Agitation should restore product to original form. Because of variances in the surfaces of treated lumber, it is a good idea to test for adhesion.
NOTE: STIR PRODUCT BEFORE USE TO ENSURE UNIFORMITY. KEEP FROM FREEZING.

BOND STRENGTH ASTM D-905 (On Hard Maple)

Temperature	Strength psi	% wood failure
Room Temperature	3,844	48
150˚F Overnight	1,820	6

Size	Item No.
1 gallon	003.15.031
5 gallons	003.15.032

→ Extend Wood Glue

APPLICATION GUIDELINES
Application temperature: Above 40˚F.
Assembly time after glue application: 15 minutes (70˚F/50% RH)
Minimum required spread: 7 mils (typical)
Required clamping pressure: Enough to bring joints tightly together (generally, 30–80 psi for HPL, 100–150 psi for softwoods, 125–175 psi for medium woods and 175–250 psi for hardwoods).
Methods of application: Easily spread with a roller spreader or brush, or may be transferred to plastic bottles for finer gluing applications.
Cleanup: Damp cloth while glue is wet. Scrape off dried excess.

LIMITATIONS
Not intended for exterior use or where moisture is likely. For exterior applications use Titebond II Premium Wood Glue. Freezing may not affect the function of the product but may cause it to thicken. Agitation should restore product to original form. It is recommended that Titebond Extend Wood Glue not be stored for extended periods at temperatures lower than 40º.
NOTE: KEEP FROM FREEZING.

BOND STRENGTH ASTM D-905 (On Hard Maple)

Temperature	Strength psi	% wood failure
Room Temperature	3,510	81
150˚F Overnight	3,120	61

Size	Item No.
1 gallon	003.15.021
5 gallons	003.15.022

Dimensional data not binding. Dimensions in mm, inches are approximate. We reserve the right to alter specifications without notice.

Titebond®

→ Titebond® III, Ultimate Wood Glue

> Waterproof – Passes ANSI/HPVA Type I Specification
> Superior strength
> Longer open time
> Lower application temperature
> Resists solvents, heat and mildew
> Unaffected by finishes
> Water clean-up & non-toxic
> FDA approved for indirect food contact
> Sands easily without softening
> Safer than traditional waterproof glues

APPLICATION GUIDELINES
Application temperature: Above 47°F.
Open assembly time: 8–10 minutes (70°F/50% RH)
Total assembly time: 20–25 minutes (70°F/50% RH)
Minimum required spread: Approximately 6 mils or 250 square feet per gallon.
Required clamping pressure: Enough to bring joints tightly together (generally, 100–150 psi for softwoods, 125–175 psi for medium woods and 175–250 psi for hardwoods).
Methods of application: Plastic bottles for fine applications; glue may also be spread with a roller spreader or brush.
Cleanup: Damp cloth while glue is wet. Scrape off and sand dried excess.

LIMITATIONS
Not for continuous submersion or for use below the waterline. Not for structural or load bearing applications. Use when temperature, glue and materials are above 45°F. Store product below 75°F. Storage above this temperature may cause product to thicken and reduce the usable shelf life. If thickened, shake vigorously by firmly tapping the bottle on a hard surface until product is restored to original form. Because of variances in the surfaces of treated lumber, it is a good idea to test for adhesion. For best results gluing exterior doors or exotic and oily woods, please contact our Technical Support Team at 1-800-347-4583. Read MSDS before use.
NOTE: KEEP FROM FREEZING.
KEEP OUT OF THE REACH OF CHILDREN

BOND STRENGTH ASTM D-905 (On Hard Maple)

Temperature	Strength psi	% wood failure
Room Temperature	4,000	57
150°F Overnight	800	0

Size	Item No.
1 gallon	003.15.061
2.15 gallons	003.15.063
5 gallons	003.15.062

→ Titebond® II, Fluorescent Wood Glue

> Same superior performance as Titebond® II Premium Wood Glue
> Detects unwanted glue residue when viewed under a black light
> Residual glue can be sanded off prior to applying stains
> Passes ANSI type II water-resistance
> Strong initial tack for superior strength
> Fast set & short clamp time
> Water clean-up & non-toxic
> Excellent sandability

APPLICATION GUIDELINES
Application temperature: Above 55°F.
Assembly time after glue application: 5 minutes (70°F/50% RH)
Total assembly time: 10–15 minutes (70°F/50% RH)
Minimum required spread: Approximately 6 mils or 250 square feet per gallon.
Required clamping pressure: Enough to bring joints tightly together (generally, 100–150 psi for softwoods, 125–175 psi for medium woods and 175–250 psi for hardwoods).
Methods of application: Easily spread with a roller spreader or brush, or may be transferred to plastic bottles for finer gluing applications.
Cleanup: Damp cloth while glue is wet. Scrape off and sand dried excess.

LIMITATIONS
Not for continuous submersion or for use below the waterline. Not for structural or load bearing applications. Do not use when temperature, glue or materials are below 55°F. Freezing may not affect the function of the product but may cause it to thicken. Agitation should restore product to original form. Because of variances in the surfaces of treated lumber, it is a good idea to test for adhesion. Read MSDS before use.
NOTE: KEEP FROM FREEZING.
KEEP OUT OF THE REACH OF CHILDREN

BOND STRENGTH ASTM D-905 (On Hard Maple)

Temperature	Strength psi	% wood failure
Room Temperature	3,750	72
150°F Overnight	1,750	6

Size	Item No.
1 gallon	003.15.013
5 gallons	003.15.014

Dimensional data not binding. Dimensions in mm, inches are approximate. We reserve the right to alter specifications without notice.

Titebond®

→ Titebond® II, Dark Wood Glue

> Same superior performance as Titebond® II Premium Wood Glue
> Formulated for darker wood
> Passes ANSI Type II water-resistance
> Designed for interior and exterior applications
> Excellent sandability
> Unaffected by finishes
> Ideal for radio frequency (R-F) gluing systems
> Water clean-up
> Ideal for wood, hardboard, particleboard, leather, cloth and most porous materials

APPLICATION GUIDELINES
Application temperature: Above 50˚F.
Assembly time after glue application: 5 minutes (70˚F/50% RH)
Total assembly time: 15 minutes (70˚F/50% RH)
Minimum required spread: Approximately 6 mils or 250 square feet per gallon.
Required clamping pressure: Enough to bring joints tightly together (generally, 100–150 psi for softwoods, 125–175 psi for medium woods and 175–250 psi for hardwoods).
Methods of application: Plastic bottles for fine applications; glue may also be spread with a roller spreader or brush.
Cleanup: Damp cloth while glue is wet. Scrape off and sand dried excess.

LIMITATIONS
Not for continuous submersion or for use below the waterline. Not for structural or load bearing applications. Do not use when temperature, glue or materials are below 55°F. Freezing may not affect the function of the product but may cause it to thicken. Agitation should restore product to original form. Because of variances in the surfaces of treated lumber, it is a good idea to test for adhesion.
Not FDA approved for indirect food contact. Read MSDS before use.
NOTE: KEEP FROM FREEZING.
KEEP OUT OF THE REACH OF CHILDREN

BOND STRENGTH ASTM D-905 (On Hard Maple)

Temperature	Strength psi	% wood failure
Room Temperature	3,600	77
150˚F Overnight	1,600	10

Size	Item No.
16 oz.	003.15.081
1 gallon	003.15.082
5 gallons	003.15.084
55 gallons	003.15.083

→ Titebond®, White Glue

> Fast set with a strong bond
> No solvent vapors for safety
> Water clean-up & non-toxic
> Versatile
> Dries clear and colorless
> Sets faster than most other white glues

APPLICATION GUIDELINES
Application temperature: Above 50˚F.
Assembly time after glue application: 5 minutes (70˚F/50% RH)
Total assembly time: 10–15 minutes (70˚F/50% RH)
Minimum required spread: 7 mils (typical)
Required clamping pressure: Enough to bring joints tightly together (generally, 30–80 psi for HPL, 100–150 psi for softwoods, 125–175 psi for medium woods and 175–250 psi for hardwoods).
Methods of application: Easily spread with a roller spreader or brush, or may be transferred to plastic bottles for finer gluing applications.
Cleanup: Damp cloth while glue is wet. Scrape off and sand dried excess.

LIMITATIONS
Titebond White Glue is not intended for exterior use or where moisture is likely. For exterior applications use Titebond III Ultimate Wood Glue or Titebond II Premium Wood Glue. Not for structural or load bearing applications. Do not use when temperature, glue, or materials are below 50°F. Freezing may not affect the function of the product but may cause it to thicken. Agitation should restore product to original form. Read MSDS before use.
KEEP FROM FREEZING.
KEEP OUT OF THE REACH OF CHILDREN

BOND STRENGTH ASTM D-905 (On Hard Maple)

Temperature	Strength psi	% wood failure
Room Temperature	3,550	50
150˚F Overnight	1,600	15

Size	Item No.
1 gallon	003.15.124

Dimensional data not binding. Dimensions in mm, inches are approximate. We reserve the right to alter specifications without notice.

Titebond®

→ Quick & Thick Multi-Surface Glue

> Bonds most porous and semi-porous materials
> Extra-thick formula helps fill small cracks and gaps
> No-runs, no-drips
> Strong initial tack
> Unaffected by finishes
> Excellent sandability
> Water clean-up
> Nonflammable with no offensive odor
> For finish trim, crown moulding, baseboards and window casings
> Specifically designed for wood and provides strong bonds on pottery, ceramics, stone, fabric, glass and most materials

APPLICATION GUIDELINES
Application temperature: Above 50˚F.
Assembly time after glue application: 3–5 minutes (70˚F/50% RH)
Total assembly time: 10–15 minutes (70˚F/50% RH)
Minimum required spread: Approximately 6 mils or 250 square feet per gallon.
Required clamping pressure: Enough to bring joints tightly together (generally, 100–150 psi for softwoods, 125–175 psi for medium woods and 175–250 psi for hardwoods).
Methods of application: Plastic bottles for fine applications; glue may also be spread with a roller spreader or brush.
Cleanup: Damp cloth while glue is wet. Scrape off and sand dried excess.

LIMITATIONS
Not intended for exterior use or where moisture is likely. For exterior applications, use Titebond III Ultimate Wood Glue or Titebond II Premium Wood Glue. Do not use when temperature, glue or materials are below 55°F. Freezing may not affect the function of the product but may cause it to thicken. Agitation should restore product to original form. Read MSDS before use.
NOTE: KEEP FROM FREEZING.

BOND STRENGTH ASTM D-905 (On Hard Maple)

Temperature	Strength psi	% wood failure
Room Temperature	3,000	7
150˚F Overnight	650	0

Size	Item No.
16 oz.	003.57.150

Dimensional data not binding. Dimensions in mm, inches are approximate. We reserve the right to alter specifications without notice.

Titebond®

→ Melamine Glue

> Bonds melamine and vinyl coated products to porous materials
> Thicker formulation for fewer runs and drips
> Low odor and nonflammable
> Dries clear

APPLICATION GUIDELINES
Application temperature: Above 40°F.
Open assembly time: 5 minutes (70°F/50% RH)
Total assembly time: 10–15 minutes (70°F/50% RH)
Minimum required spread: Approximately 6 mils or 250 square feet per gallon.
Required clamping pressure: Enough to bring joints tightly together (generally, 100–150 psi for softwoods, 125–175 psi for medium woods and 175–250 psi for hardwoods).
Methods of application: Easily spread with a roller spreader or brush, or may be transferred to plastic bottles for finer gluing applications.
Cleanup: Damp cloth while glue is wet. Scrape off and sand dried excess.

LIMITATIONS
Not intended for exterior use or where moisture is likely. Not for structural or load bearing applications. Vacuum pressing should only be used for veneers up to 1/16" in thickness. Do not use when temperature, glue or materials are below 40°F. If product has been frozen (gel-like appearance), it cannot be used. Read MSDS before use.
NOTE: KEEP FROM FREEZING.
KEEP OUT OF THE REACH OF CHILDREN

BOND STRENGTH ASTM D-905 (On Hard Maple)

Substrates	Strength psi	% wood failure
Melamine/Melamine Lap Shears	329	100
Melamine/Particle Board	329	100

Size	Item No.
16 oz.	003.15.041
1 gallon	003.15.042
5 gallons	003.15.148

→ Liquid Hide Glue

> Ready-to-use form, requires no mixing, heating or stirring
> Ideal for fine furniture or musical instrument repair
> Excellent sandability
> Unaffected by finishes
> Excellent creep-resistance
> Can be used to create a "crackling effect" on wood
> Slow set allows precise assembly

APPLICATION GUIDELINES
Application temperature: Above 50°F.
Assembly time after glue application: 10 minutes (70°F/50% RH)
Total assembly time: 20–30 minutes (70°F/50% RH)
Minimum required spread: Approximately 6 mils or 250 square feet per gallon.
Required clamping pressure: Enough to bring joints tightly together (generally, 100–150 psi for softwoods, 125–175 psi for medium woods and 175–250 psi for hardwoods).
Methods of application: Can be applied by roller or dip spreader, pressurized oil cans, plastic applicators, brush or stick.
Cleanup: Damp cloth while glue is wet. Scrape off and sand dried excess.

LIMITATIONS
Not intended for exterior use or where moisture is likely. Not for structural or load bearing applications. For exterior applications use Titebond III Ultimate Wood Glue or Titebond II Premium Wood Glue.
Freezing may not affect the function of the product but may cause it to thicken. Agitation should restore product to original form.
NOTE: KEEP FROM FREEZING.

BOND STRENGTH ASTM D-905 (On Hard Maple)

Temperature	Strength psi	% wood failure
Room Temperature	3,591	72
150°F Overnight	3,207	59

Size	Item No.
16 oz.	003.57.140

Dimensional data not binding. Dimensions in mm, inches are approximate. We reserve the right to alter specifications without notice.

Titebond®, Instant Bond

> Two-part bonding system that sets in 5–15 seconds and initially cures in 30–60 seconds
> Provides a strong permanent bond
> Ideal for hard to reach joints or difficult to clamp areas
> Designed primarily for wood and wood products, but is also very effective on a wide variety of materials and substrates

→ Wood Adhesive Gel

> Perfect for gap-filling, gluing porous and odd-shaped surfaces
> Can be used for various cabinet-making applications, such as pre-bonding moldings to install as one unit

Size	Item No.
2 oz.	003.50.290

→ Wood Adhesive Thick

> An excellent choice for bonding end-grain in a miter join application and quick assembly of jigs and fixtures
> Adhere turning blocks to scrap blocks on a faceplate for immediate use

Size	Item No.
2 oz.	003.50.294

→ Wood Adhesive Medium

> Ideal for filling knots and voids in wood, adhering pen tubes to blanks for pen turning applications, and for soaking end-grain to prevent splitting

Size	Item No.
2 oz.	003.50.292

→ Wood Adhesive Thin

> Optimal for use in repairing hair line cracks and small defects in wood, as well as repairing loose veneer edges
> Titebond Instant Bond Activator can be used to further reduce set times, although it is not required for producing strong, tight-fitting joints
> Also can be used as a finish

Size	Item No.
2 oz.	003.50.296

→ Activator

> Accelerates the curing of all Titebond Instant Bond Adhesives
> Especially effective for large gaps, very porous woods, bridge bonding joints and bonding acidic surfaces or in low humidity conditions
> Heptane-based solvent will not mar finishes or damage plastics

Size	Item No.
2 oz.	003.50.299

→ Instant Bond Value Pack

> Bonds MDF, wood, acrylic, granite, rubber, PVC and more

	Item No.
	003.50.286

Supplied With
2 oz. Instant Bond Thick
5.5 oz. Instant Bond Accelerator

Dimensional data not binding. Dimensions in mm, inches are approximate. We reserve the right to alter specifications without notice.

Titebond®

→ Pro Heavy Duty Construction Adhesive

> Ideal for bonding wood, metal, brick, marble, ceramic tile, concrete, drywall and wet, frozen and treated lumber
> Designed for wet, frozen or treated lumber and ideal for metal, brick, concrete, ceramics and most large-panel substrates
> Reduces the amount of nailing and helps eliminate squeaky floors
> Excellent water-resistance and permanently flexible
> Exceeds the performance requirements of the American Plywood Association AFG-01
> Specification, ASTM D3498 and ASTM C557, HUD/FHA Use of Materials Bulletin #60

APPLICATION GUIDELINES
Application temperature: 0°F to 100°F
Service temperatures: -20°F to 120°F
Methods of application: Cartridge/caulking gun
Coverage (maximum): Approximate length of bead according to bead diameter:

Container bead	1/8" bead	1/4" bead	3/8"
10 oz. cartridge	123 ft.	30 ft.	13 ft.

Working time: Approx. 20–30 minutes for a 1/4" bead.
Working surfaces: Surfaces to be bonded should be clean and free from excessive oil, grease, water, dirt or any other material that may deter adhesion. Apply Titebond Heavy Duty Construction Adhesive to only one of the surfaces to be bonded. NOTE: When bonding subfloors or wet, frozen and treated lumber, nail or screw as recommended by the American Plywood Association.
Cleanup: Tools/adhesive may be cleaned with acetone or mineral spirits. Follow solvent vendor's precautions when using solvents.
Note
Test solvent on a discreet area to make sure it will not mar or attack the surface.

LIMITATIONS
Not designed for continuous submersion or for use on polystyrene foam, vinyl-coated drywall or rigid plastics. For polystyrene foam, tub surrounds and most other plastics, we recommend Titebond Interior/Exterior Construction Adhesive.

	Item No.
	003.50.192

→ Weathermaster Sealant

> Solvent free
> Permanently flexible and watertight seal
> Superior adhesion to most building materials
> Outperforms both silicone and urethane sealants
> UV resistant
> Will not yellow or crack
> Mold and mildew resistant
> VOC-compliant
> Passes ASTM C920 Type S Grade NS Class 50
> Passes Federal Specification TT-S-00230C

APPLICATION GUIDELINES
Application temperature: Above 10°F
Service temperatures: -75°F to 250°F
Methods of application: Cartridge/caulking gun
Coverage (maximum): Approximate length of bead according to bead diameter:

Container bead	1/4" bead	3/8" bead	1/2"
10.1 oz. cartridge	32 ft.	13.5 ft.	7.5 ft.

Working time: Approx. 10–15 minutes for a 1/4" bead.
Working surfaces: For best results, surfaces should be clean, dry and free from any material that may deter adhesion.
Cleanup: Clean tools and excess material with mineral spirits before it dries. Scrape dried excess.

LIMITATIONS
Extrudes slightly yellow and dries crystal clear. Air, caulk and surface temperature should be above 10°F. If desired, it may be painted with water-based paint immediately (wet-on-wet). For other types of paints, we recommend a compatibility test. If joint depth exceeds 1/4", use backing material. Not designed for continuous submersion or use below the waterline. Do not use for aquariums.

	Item No.
	003.50.200

Dimensional data not binding. Dimensions in mm, inches are approximate. We reserve the right to alter specifications without notice.

Titebond®

→ 100% Silicone Sealant

> Designed for interior and exterior applications
> Excellent adhesion to most building materials
> Provides a watertight, mildew-resistant seal
> Withstands extreme temperature changes when fully cured
> Extrudes easily in lower temperatures and dries quickly
> Maintains color with age and will not crack or become brittle
> Certified to Federal Specification TT-S-001543A Class A and TT-S-00230C Passes ASTM C920 Type S Grade NS Class 25
> Complies with FDA under 21 CFR 177.2600 for indirect food contact applications

APPLICATION GUIDELINES
Application temperature: 20°F to 95°F
Service temperatures: -60°F to 350°F
Methods of application: Cartridge/caulking gun
Coverage (maximum): Approximate length of bead according to bead diameter:

Container bead	1/4" bead	3/8" bead	1/2"
10.1 oz. cartridge	32 ft.	13.5 ft.	7.5 ft.

Working time: Approx. 15–20 minutes for a 1/4" bead.
Working surfaces: Surfaces to be caulked should be clean, dry and free from excessive oil, grease, water, dirt or any other material that may deter adhesion.
Cleanup: Uncured material may be cleaned with mineral spirits or equivalent solvent. Follow solvent vendor's precautions when using solvents.

LIMITATIONS
Do not apply if rain is expected within 12 hours. 100% Silicone Sealant should not be painted. The paint film will not stretch with the expansion of the caulk and the paint may crack or peel. It is not designed for continuous submersion or use below the waterline.

Color	Item No.
white	003.51.001
clear	003.51.002
black	003.51.010

→ Painters Plus Caulk

> For interior and exterior applications
> Seals joints, repairs cracks and fills gaps
> Paints & stains easily with one coat
> Provides a flexible, watertight seal
> Tools easily and cleans up with water
> No residual odor
> De-aired for a smoother bead
> Exceeds the performance requirements of ASTM C834

APPLICATION GUIDELINES
Application temperature: Above 40°F
Service temperatures: -20°F to 150°F
Methods of application: Cartridge/caulking gun
Coverage (maximum): Approximate length of bead according to bead diameter:

Container bead	1/4" bead	3/8" bead	1/2"
10.1 oz. cartridge	32 ft.	13.5 ft.	7.5 ft.

Working time: Approx. 10–15 minutes for a 1/4" bead.
Working surfaces: Surfaces to be caulked should be clean, dry and free from excessive oil, grease, water, dirt or any other material that may deter adhesion.
Cleanup: Clean tools and excess material with water while wet. Scrape dried excess.

LIMITATIONS
Do not apply if rain is expected within 12 hours. Painters Plus should be dry to the touch and ready to paint in 2–4 hours. Not designed for continuous submersion or use below the waterline.

Color	Item No.
white	003.55.080
almond	003.55.081
brown	003.55.082
clear	003.55.083
gray	003.55.084
woodtone	003.55.085
black	003.55.086
antique white	003.55.087

Dimensional data not binding. Dimensions in mm, inches are approximate. We reserve the right to alter specifications without notice.

Titebond®

→ Cold Press Veneer

> Economical alternative to contact cement
> Formulated to minimize “bleed-through”
> Moderate speed of set
> No harmful vapors
> Nonflammable

APPLICATION GUIDELINES
Application temperature: Above 50°F
Open assembly time: 15 minutes (70°F/50% RH)
Total assembly time: 15–20 minutes (70°F/50% RH)
Minimum required spread: Approximately 6 mils or 250 square feet per gallon.
Required pressure application: 100–250 psi, depending on substrates.
Methods of application: For most consistent coverage a mechanical spreader is recommended.
Cleanup: Damp cloth while glue is wet. Scrape off and sand dried excess.

LIMITATIONS
Titebond Cold Press for Veneer is specifically designed for veneering and is not suited for other types of assembly applications. Not recommended for exterior use or where moisture is likely. Do not use when temperature, glue or materials are below 50°F. Freezing may not affect the function of the product but may cause it to thicken. Agitation should restore product to original form. Read MSDS before using.
NOTE: STIR PRODUCT BEFORE USE TO ENSURE UNIFORMITY. KEEP FROM FREEZING.

Size	Item No.
1 gallon	003.15.101
5 gallons	003.15.102

→ UA 920 Sealant

> Permanently flexible and airtight, water-resistant seal
> Excellent adhesion to most building materials
> Ideal for interior/exterior applications
> Soap and water clean-up
> Paintable with water-based (latex-based) paints
> VOC-compliant
> Mildew resistant
> UV resistant
> Suitable for all climates
> No priming or mixing required
> 50% total joint movement
> 800% elongation

APPLICATION GUIDELINES
Application temperature: Above 40°F
Service temperatures: -40°F–180°F
Methods of application: Cartridge/caulking gun
Working time: Approximately 15 minutes for a 1/4” bead.
Working surfaces: For best results, surfaces must be cleaned down to the original substrate, dry and free from any material that may deter adhesion.
Cleanup: Clean tools and excess material with soap and water before it dries. Remove cured sealant by cutting with a sharp-edged tool.
Note
Test solvent on a discreet area to make sure it will not mar or attack the surface.

LIMITATIONS
Do not apply if rain is expected within 12 hours. Air, sealant and surface temperature should be above 40°F. Allow at least 2 hours of drying time before painting with acrylic or elastomeric coatings. If joint depth exceeds 1/4”, use backing material. Not designed for continuous submersion or use below the waterline. Do not use for aquariums.

Size: 10.1 oz. cartridge

Color	Item No.
white	003.55.050
clear	003.55.053

Note
Titebond UA 920 Clear (8741) will be white during application but will clear within 7-14 days, depending on temperature, humidity and bead size.

Dimensional data not binding. Dimensions in mm, inches are approximate. We reserve the right to alter specifications without notice.

Titebond®

→ GREENchoice Heavy Duty Construction Adhesive

> Waterproof
> All-purpose versatility is ideal for all common building materials
> Provides a strong grab, fills gaps and irregularities and will remain permanently flexible
> Environmentally safe and VOC compliant
> Nonflammable, emits no harmful fumes and cleans up with water
> Exceeds the requirements of the APA' AFG-01 specification and ASTM C557
> Bonds wood, paneling, drywall, plywood, metal, plastics, foam board, tub surrounds & more
> Can be used on wet, frozen, or treated lumber
> Offers freeze/thaw stability
> Cartridge and carton contain post-consumer recycled material

APPLICATION GUIDELINES
Application Temperature: 40°F–100°F
Service Temperature Range: 0°F–120°F
Method of Application: Cartridge/caulking gun
Coverage (maximum): Approximate length of bead according to bead diameter:

Container bead	1/8" bead	1/4" bead	3/8"
10.5 oz. Cartridge	129 ft.	32 ft.	14 ft.
28 oz. Cartridge	355 ft.	89 ft.	39 ft.

Working time: Approx. 20 minutes for a 1/4" bead.
Working surfaces: Surfaces must be clean and free of any material that may deter adhesion. Apply adhesive to only one of the surfaces to be bonded. NOTE: For subfloors, nail or screw each sheet as recommended by the American Plywood Association.
Cleanup: Clean with water while adhesive is wet. Scrape off dried excess with a putty knife. Remove residue with mineral spirits or equivalent solvent. Follow solvent vendor's precautions when using solvents.
Note
Test solvent on a discreet area to make sure it will not mar or attack the surface.

LIMITATIONS
Not designed for continuous submersion or for use on mirrors. When applying over paint, wallpaper, ceramic tile or other thin non-porous materials, sanding or scraping to penetrate that surface will allow drying and increase bond strength. This product cannot be used to bond one non-porous surface to another because such a situation will prevent drying. Works well on most metals, however, for heavy metal or steel applications, we recommend GREENchoice Premium Polyurethane. For best results, store adhesive above 40°F.

Size	Item No.
10.5 oz.	003.50.195
28 oz.	003.50.196

→ GREENchoice Fast Set Construction Adhesive

> A one-component, advanced adhesive technology designed to build strength faster than other comparable products
> Use for interior and exterior construction projects
> The highest performing product of its kind, offering unmatched strength and durability even when bonding non-porous materials
> Offers a fast set-up time as well as a smooth bead for effortless extrusion even in near-freezing temperatures
> Ideal for virtually all building materials, including wet, frozen, engineered and treated lumber, metal, plastic, foam, mirror, concrete and brick.
> Environmentally safe and VOC compliant
> Cartridge and carton contain post-consumer recycled material

APPLICATION GUIDELINES
Application Temperature: 32°F–120°F
Service Temperature Range: -20°F–120°F
Method of Application: Cartridge/caulking gun
Coverage (maximum): Approximate length of bead according to bead diameter:

Container bead	1/8" bead	1/4" bead	3/8"
10 oz. Cartridge	123 ft.	30 ft.	13 ft.
28 oz. Cartridge	343 ft.	86 ft.	38 ft.

Skin time: 15-20 minutes at 50% humidity.
Working surfaces: Surfaces to be bonded should be clean and free from excessive oil, grease, water, dirt or any other material that may deter adhesion. Apply adhesive to only one of the surfaces to be bonded. NOTE: When bonding subfloors or wet, frozen and treated lumber, nail or screw each sheet as recommended by the American Plywood Association.
Cleanup: Scrape off dried excess with a putty knife. Remove residue with mineral spirits or equivalent solvent. Follow solvent vendor's precautions when using solvents.
Note
Test solvent on a discreet area to make sure it will not mar or attack the surface.

LIMITATIONS
Not designed for continuous submersion. Adhesive can be difficult to remove from skin and clothing. It is recommended that gloves be worn. When using on non-porous substrates, mist with water to speed curing.

Size	Item No.
10 oz.	003.50.282
28 oz.	003.50.284

Dimensional data not binding. Dimensions in mm, inches are approximate. We reserve the right to alter specifications without notice.

Titebond®

→ Duramaster™ Sealant

Color	Item No.
white	003.51.005
almond	003.51.006
*clear	003.51.007
black	003.51.020
medium bronze	003.51.021
gray	003.51.022
clay	003.51.023
ironstone	003.51.024
redwood	003.51.025
woodtone	003.51.026
dark brown	003.51.027
tan	003.51.028
dark bronze	003.51.029

> The first elastomeric, water-based sealant with 100% joint movement*
> *Clear offers 25% joint movement
> For interior and exterior applications
> UV resistant
> For windows and doors
> For vinyl, metal, glass, wood, PVC, concrete, aluminum and all types of siding
> Spans up to 2" wide, stays flexible, crackproof, paintable and VOC-compliant
> Certified to Federal Specification TT-S-00230C , ASTM C920, CLASS 100/50 (white and colors), ASTM C920, Class 25/25 (clear), ASTM C834, Type OP, Grade -18ºC, LEED v4.1 (white and colors), AAMA 803.3-16 Type I (white and colors), AAMA 808.3-16 Type I (white and colors)

APPLICATION GUIDELINES
Application Temperature: Above 40°F and below 120°F
Service Temperature Range: 0°F–160°F
Method of Application: Cartridge/caulking gun
Coverage (maximum): Approximate length of bead according to bead diameter:

Container bead	1/8" bead	1/4" bead	3/8" bead	1/2"bead
10.1 oz. Cartridge	123 ft.	31 ft.	14 ft.	8 ft.

Working time: Approx. 15 minutes for a 1/4" bead.
Working surfaces: Surfaces should be cleaned down to the original substrate, dry and free from excessive oil, grease, water, dirt or any material that may deter adhesion.
Painting: 2-4 hours with a high-performance water-based (latex) paint
Cleanup: Clean excess material with a damp cloth. Clean hands and tools with soapy water. Scrape dried excess.

LIMITATIONS
Do not apply if rain is expected within 24 hours. Air, sealant and surface temperature should be above 40°F and rising. Protect from rain for 24–48 hours after application.
Dry time may be extended in humid or cold conditions. Painting may occur within 2-4 hours after application with a high-quality water-based (latex-based) paint. For other paint types, a compatibility test is recommended. To ensure neat sealant lines, mask areas adjacent to joints. Always apply sealant in a bead form. Once sealant is dry to the touch and does not transfer, remove masking tape. If joint depth exceeds 1/2", use backing material. NOTE: Highly recommend using backer rod/backing material for all joints. Sealant may appear to have a different tint/color when initially extruded until it is fully dried/cured. Not designed for continuous submersion or use below the waterline. Store unused product in dry location at or below 70˚F (21˚C). Not for use with nail holes or butt joints.

Dimensional data not binding. Dimensions in mm, inches are approximate. We reserve the right to alter specifications without notice.

This page is left blank intentionally.

Dimensional data not binding. Dimensions in mm, inches are approximate. We reserve the right to alter specifications without notice.

Accessories

→ Empty Glue Bottle and Cap with Control Tip

Description	Item No.
16 oz. bottle	003.48.000
Cap with control tip	003.48.090

→ Titebond® Pump

> For use with Projugs and gallon jugs
> Material: Plastic

Color	Item No.
white/black	003.48.010

→ Glü-Bot

While using the Glü-Bot, store the spout cap on nib on the large screw cap.

> Spill-proof nozzle
> Easy-squeeze bottle
> Vacuum valve keeps glue level high, even when you're getting low
> Puts the glue where you want it
> Essential for every craftsman

Size	Item No.
16 oz.	003.49.802

→ Guide

> For a clean, straight line without going over the edge
> For 3/4" materials

	Item No.
	003.49.808

Supplied With
5 pcs.

→ Blade and Yorker Tips

Blade

Yorker

Description	Item No.
Blade tips	003.49.806
Yorker tips	003.49.805

Supplied With
5 pcs.

→ Lid and Retaining Ring

Size	Item No.
16 oz.	003.49.803

Supplied With
5 pcs.

→ Glü-Bot Red Caps

Size	Item No.
16 oz.	003.49.804

Supplied With
5 pcs.

Dimensional data not binding. Dimensions in mm, inches are approximate. We reserve the right to alter specifications without notice.

Hand Protection

> Economical and convenient for use with finishes, epoxies and chemicals

Note
Gloves will not protect against all types of chemicals or resist chemicals indefinitely. Always check the product label for recommended gloves. Replace gloves that leak, swell, wrinkle or change color.

→ Gloves, Thin Nitrile, Disposable

> Developed for assembly work in the electronics industry
> Provides three times the puncture resistance of similar latex and vinyl gloves and increased dexterity and flexibility
> Contain no protein allergens
> Provides the same protection as latex and vinyl gloves
> Not recommended for use with aniline dyes, ketones or Citristrip®
> They provide the best protection for use with polyurethanes
> 5 mil thickness

> Material: 100% Synthetic Nitrile

Size	Item No.
Medium	007.64.012
Large	007.64.013
X-Large	007.64.014

Supplied With
100 pcs.

> 5 mil thickness
> Powder-free

Size	Item No.
Medium	007.64.172
Large	007.64.173
X-Large	007.64.174

Supplied With
100 pcs.

> 8 mil thickness
> Powder-free

Size	Item No.
Medium	007.64.016
Large	007.64.015
X-Large	007.64.017

Supplied With
50 pcs.

Dimensional data not binding. Dimensions in mm, inches are approximate. We reserve the right to alter specifications without notice.

Hand Protection

This Chemical Resistance Chart is intended to provide general information about the reactions of different glove materials to the chemicals listed. SAS Safety gloves have not been individually tested against these chemicals. Variability in glove thickness, chemical concentration, temperature and length of exposure to chemicals will affect the performance.

Chemical	Neoprene	Nitrile	Latex	PVC	Chemical	Neoprene	Nitrile	Latex	PVC
Acetaldehyde	E	P	F	NR	Kerosene	E	E	P	F
Acetic Acid	E	G	G	F	Lactic Acid	E	E	E	E
Acetone	G	NR	G	NR	Lauric Acid	E	E	G	F
Acetonitrile	F	NR	F	NR	Linoleic Acid	E	E	P	G
Ammonium Hydroxide<30%	E	E	G	E	Linseed Oil	E	E	P	E
Amyle Acetate	NR	E	F	P	Maleic Acid	E	E	P	G
Amyl Alcohol	P	G	G	NR	Methyl Acetate	G	P	P	NR
Aniline	G	NR	P	F	Methyl Alcohol	E	E	E	G
Animal Fats	E	E	P	G	Methylamine	G	E	E	E
Battery Acids	E	E	G	E	Methyl Bromide	NR	NR	NR	NR
Benzaldehyde	NR	NR	F	NR	Methylene Chloride	NR	NR	NR	NR
Benzene	NR	P	NR	NR	Methyl Cellusolve	E	F	P	-
Benzoly Chloride	NR	NR	P	NR	Methyl Ethyl Ketone (MEK)	G	NR	G	NR
Butane	F	E	P	P	Methylisobutyl Ketone	NR	P	F	NR
Butyl Acetate	NR	F	P	NR	Methyl Methacrylate	NR	P	P	NR
Butyl Alcohol	E	P	E	G	Mineral Oil	E	E	P	F
Butyl Cellusolve*	E	E	E	NR	Mineral Spirits	G	E	NR	F
Carbon Acid	E	P	P	G	Monoethanolamine	E	E	G	E
Carbon Disulfide	NR	NR	NR	NR	Morpholine	P	NR	G	NR
Carbon Tetrachloride	P	G	NR	NR	Muriatic Acids	E	G	G	G
Castor Oil	E	E	E	E	Naptha V.M and P.	G	E	NR	P
Cellosole Acetate	E	G	G	NR	Nitric Acid <30%	E	P	G	G
Cellosole Solvent	E	G	E	NR	Nitrile Acid 70%	G	NR	F	F
Chlorobenzene	NR	NR	NR	NR	Nitrile Acid Red Fuming	NR	NR	P	P
Chloroform	F	F	NR	NR	Nitrile Acid White Fuming	NR	NR	P	P
Chloronaphalens	NR	F	NR	NR	Nitrobenzene	NR	NR	P	NR
Chloroethene VG	NR	F	NR	P	Nitromethane	E	F	G	P
Chromic Acid	F	F	NR	G	Nitropropane	G	NR	E	NR
Citric Acid	E	E	E	E	Octyl Alcohol	E	E	G	F
Cottonseed Oil	E	E	P	G	Oleic Acid	E	E	P	F
Cresols	G	G	P	F	Paint Remover	G	G	F	P
Cutting Oil	E	E	F	P	Palmitic Acid	E	G	G	G
Cyclohexane	F	E	P	P	Pentachlorophenol	E	E	P	F
Cyclohexanol	E	E	P	G	Pentane	E	E	P	NR
Dibutyl Phthalate	F	G	P	G	Perchloric Acid 60%	E	E	P	E
Diethylamie	P	F	NR	NR	Potassium Hydroxide <50%*	E	G	E	E
Di-Isobutyl Ketone	P	E	P	P	Printing Ink	G	E	G	F
Dimethyl Formamide (DMF)	G	NR	E	NR	Propyl Acetate	P	F	P	NR
Dimethyl Sulfoxide (DMSO)	E	E	E	NR	Propyl Alcohol	E	E	E	F
Dicotyl Phthalate (DOP)	G	G	P	NR	Perchloroethylene	NR	G	NR	NR
Dioxane	NR	NR	NR	NR	Phenol	E	NR	G	G
Ethyl Acetate	F	NR	P	NR	Phosphoric Acid*	E	E	G	G
Ethyl Alcohol	E	E	E	G	Picric Acid	E	E	G	E
Ethylene Dichloride	NR	NR	P	NR	Propylene Oxide	NR	NR	P	NR
Ethylene Glycol	E	E	E	E	Rubber Solvent	G	E	NR	NR
Ethyl Ether	E	E	NR	NR	Sodium Hydroxide <50%	E	G	E	G
Ethylene Trichloride	P	P	P	NR	Stoddard Solvent	E	E	P	NR
Formaldehyde	E	E	E	E	Styrene*	NR	NR	NR	NR
Formic Acid	E	F	E	E	Sulfuric Acid 95%	F	G	NR	NR
Freon	G	F	NR	NR	Tannic Acid	E	E	E	E
Furfural	G	NR	E	NR	Tetrahydrofuran (THF)	NR	NR	NR	NR
Gasoline	P	E	NR	P	Toluene	P	G	NR	NR
Gylcerine	E	E	E	E	Toluene Di-Isocyanate (TDI)	NR	NR	P	P
Hexane	E	E	NR	NR	Trichlorethylene (TCE)	P	G	NR	NR
Hydraulic Fluid Petro. Based	F	E	P	G	Triricrestyl Phosphate (TCP)	F	E	G	F
Hydraulic Fluid Easter Based	P	P	P	P	Triethanolamine 85% (TEA)	E	E	G	E
Hydrazine 65%	E	E	G	E	Tung Oil	E	E	NR	F
Hydrochloric Acid*	G	E	E	E	Turbine Oil	E	G	P	F
Hydrofluoric Acid	G	E	E	E	Turpentine	G	E	P	P
Hydrogen Peroxide	E	E	E	E	Vegetable Oil	E	E	P	F
Hydroquinone	G	E	E	E	Xylene	P	G	NR	NR
Isobutyl Alcohol	E	E	E	F					
Iso-Octane	E	E	NR	P					
Isopropyl Alcohol*	E	E	E	G					

Rating	Color
Excellent	
Good	
Fair	
Poor	
NR*	

NR* = Not Recommended

Dimensional data not binding. Dimensions in mm, inches are approximate. We reserve the right to alter specifications without notice.

***Warning:** Protective gloves and other protective apparel selection must be based on the user's assessment of the workplace hazards. Glove and Apparel materials do not provide unlimited protection against all chemicals. It is the user's responsibility to determine before use that the Glove and Apparel will resist permeation and degradation by the chemicals (including chemical mixtures) in the environment of intended use. Failure by the user to select the correct protective gloves can result in injury, sickness or death.

Hand Protection

→ Astro-Grip Gloves

> 7 mil thickness
> Powder-free
> High visibility orange color
> Dual-sided scale fully textured surface for superior gripping power
> Exceptional chemical and puncture resistance
> Material: Nitrile; Color: orange

Size	Item No.
Medium	007.64.049
Large	007.64.050
X-Large	007.64.051
2 X-Large	007.64.052

Supplied With
100 pcs.

→ Raven Gloves

> 6 mil thickness
> Fully textured for enhanced gripping power
> Powder-free
> Material: Nitrile; Color: black

Size	Item No.
Medium	007.64.045
Large	007.64.046
X-Large	007.64.047
2 X-Large	007.64.048

Supplied With
100 pcs.

→ Spidey Gloves

> Crinkle black latex coating
> Extremely comfortable for prolonged wear
> Excellent dexterity, sensitivity and fit
> Material: Nylon/Polyester Shell, Latex Coating; Color: red/black

Size	Item No.
Small	007.64.571
Medium	007.64.572
Large	007.64.573
X-Large	007.64.574

→ Stealth Gloves

> Material: Nylon/Spandex Blend, Nitrile
> Color: gray/black

Size	Item No.
Small	007.64.581
Medium	007.64.582
Large	007.64.583
X-Large	007.64.584

→ Gloves, thick

> 15 mil thickness
> Puncture and abrasion resistant
> Tough against chemicals, solvents, hazardous liquids, PVC cements or standing water
> Use during chemical processing, oil refining and handling petrochemicals
> Textured for superior grip on wet or slippery material
> Flock-lined, unsupported nitrile
> Length: 13”
> Material: Nitrile

Size	Item No.
Medium	007.64.053
Large	007.64.054
X-Large	007.64.055

Dimensional data not binding. Dimensions in mm, inches are approximate. We reserve the right to alter specifications without notice.

Hand Protection

> Economical and convenient for use with finishes, epoxies and chemicals

Note
Gloves will not protect against all types of chemicals or resist chemicals indefinitely. Always check the product label for recommended gloves. Replace gloves that leak, swell, wrinkle or change color.

→ Grip N® Glove

> PVC coated “N-Tread” provides outstanding flexibility, dexterity, grip and abrasion resistance
> Reversible design can be worn on either hand providing four working surfaces

Size	Item No.
Men’s	007.64.550

Supplied With
12 pairs

→ Mechanics Gloves

> Hook and loop closure
> Goatskin palm
> Material: Spandex and Grain Goatskin; Color: black/red/white

Size	Item No.
Medium	007.51.111
Large	007.51.112
X-Large	007.51.113

→ Mechanics Impact Gloves

> With TPR Impact Resistance
> Hook and loop closure
> Goatskin palm
> Material: Spandex and Grain Goatskin; Color: black/red/white

Size	Item No.
Medium	007.51.116
Large	007.51.117
X-Large	007.51.118

Dimensional data not binding. Dimensions in mm, inches are approximate. We reserve the right to alter specifications without notice.

Protection

→ Crew Coveralls - Gen-Nex

> Features full zipper front with elastic wrists and ankle cuffs
> Secure with front hook and loop closure
> Passes ASTM F903 penetration testing for Isocyanate Based Paint; test performed using U.S. Chemicals & Plastics 22 Fast Activator Glamour Clear
> Material: Cloth-like fiber; Color: white

Size	Item No.
Large	007.46.312
X-Large	007.46.313
2 X-Large	007.46.314

→ Back Support

> Tapered design allows a full range of body motion while maintaining proper support
> Two sets of dual elastic stretch-bands for maximum, adjustable support
> Material: Cool, Lightweight Polyester, washable

Size	Item No.
Medium	007.46.931
Large	007.46.932
X-Large	007.46.933

→ Basic Safety Vest

> 1" reflective tape on shoulders
> 1 size fits most
> Secure with front hook and loop closure
> Material: 100% Polyester

Color	Item No.
yellow	007.46.029

→ Class 2 Surveyor's Vest

> 2" reflective tape on shoulders and chest
> Secure with front hook and loop closure
> ANSI 107-2010 class 2 high visibility apparel compliant
> Material: 100% Polyester Mesh; Color: fluorescent yellow

Size	Item No.
Large	007.46.018
X-Large	007.46.019
2 X-Large	007.46.020

→ Cooling Towel

> Provides UPF-50 protection from the sun
> Protects against dust, debris, and wind
> Reusable and machine washable
> Material: Lightweight Microfiber or PVA

Color	Item No.
yellow	007.46.928

Dimensional data not binding. Dimensions in mm, inches are approximate. We reserve the right to alter specifications without notice.

Masks

→ Respirator Mask, Disposable

> 3M-8210
> General purpose
> For solid and non-oil based particulates
> 42 CFR approved, N95 class

	Item No.
	007.48.730

Supplied With
20 pcs.

→ Respirator Mask, Disposable

> General purpose
> For solid and non-oil based particulates
> 42 CFR approved, N95 class

	Item No.
	007.48.720

Supplied With
20 pcs.

→ Pocket Dust Mask

> Soft, comfortable material
> Fully adjustable nose piece
> Easy breathe valve
> Fits in your pocket
> NA5-NIOSH rated

	Item No.
	007.48.311

→ N95 Valved Particulate Respirator

> Continuous loop latex-free head strap
> Non-toxic
> Metal-free
> 95% efficient respiratory protection in non-oil areas
> Contours to natural shape of the face, minimizing pressure points
> NIOSH approved

	Item No.
	007.48.315

Supplied With
10 pcs.

→ Dust Mask

> Easy breathe exhale valve
> High quality construction
> Fully adjustable fit

	Item No.
	007.48.312

→ N95 Particulate Respirator

- Continuous loop latex-free head strap
- Non-toxic
- Metal-free
- 95% efficient respiratory protection in non-oil areas
- Contours to natural shape of the face, minimizing pressure points
- NIOSH approved

	Item No.
	007.48.314

Supplied With
20 pcs.

→ Nuisance Mask, Disposable

> Reduces the irritating effects from non-toxic particles such as pollen and common household dust
> Soft metal nose piece
> Single strap design
> Does not provide NIOSH approved respiratory protection

	Item No.
	007.48.313

Supplied With
50 pcs.

Dimensional data not binding. Dimensions in mm, inches are approximate. We reserve the right to alter specifications without notice.

Protection

→ Ear Plugs

NRP 33 DB
spark plug style

> Disposable
> Material: PVC soft foam

Version	Item No.	Packing
Uncorded NRP 33 DB	007.49.071	200 pairs
Corded NRP 33 DB	007.49.072	100 pairs

→ Banded Ear Caps NRR 20

> Lightweight, comfortable reusable banded caps
> Easy to put on and remove

Item No.
007.49.200

→ Replacement Plugs

> For banded ear caps NRR 20, above
> Lightweight

Item No.
007.49.201

→ Foam Ear Plugs Corded NRR 30

> Pre-shaped foam ear plugs
> Self-adjusting foam expands to fit virtually every wearer

Item No.
007.49.223

Supplied With
100 pairs

→ Shoe Covers

> Fits shoes up to size 13
> Material: Polypropylene

Size	Item No.
Large	007.47.418

Supplied With
300 Covers

→ Personal Eye-Wash Station

> Dual-bottle eyewash station for temporary first-aid
> Bottles have twist-off tops with protective seals
> Material: Plastic

Item No.
007.50.170

Supplied With
2 16 oz. bottles

→ Eye-Wash Replacement Bottle

> Individual use or replacement eyewash solution for personal emergency eyewash station

Size	Item No.
16 oz.	007.50.181

→ First Aid Kit, #25

> Assortment of single-use disposable items
> 2009 standard
> ANSI Z308.1
> Ideal for light to medium industry, contractors and job sites
> Wall mountable

Item No.
007.50.142

Supplied With
25 pcs. of each item

Dimensional data not binding. Dimensions in mm, inches are approximate. We reserve the right to alter specifications without notice.

Eye and Face Protection

→ Worker Bees

> 99.9% UV Protection
> Scratch-resistant coating on lens
> Fits over most prescription glasses
> Meets ANSI Z87.1-2015 and CSA Z94.3
> Material: Lens: Impact-resistant Polycarbonate, clear

	Item No.
	007.48.041

Supplied With
12 pairs

→ NSX

> 99.9% UV Protection
> Anti-fog and scratch-resistant coating on lens
> Single lens design
> Lightweight wrap-around lens
> Meets ANSI Z87.1-2015
> Material: Lens: Impact-resistant Polycarbonate, clear

	Item No.
	007.48.043

Supplied With
12 pairs

→ Hornets

> 99.9% UV Protection
> Scratch-resistant coating on lens
> Molded-in sideshields
> Adjustable temples for excellent fit
> Meets ANSI Z87.1-2015
> Material: Lens: Impact-resistant Polycarbonate, clear; Frame; black

	Item No.
	007.48.042

Supplied With
12 pairs

→ Lightcrafters™ Readers, with anti-fog

> 99.9% UV Protection
> Anti-fog and scratch-resistant coating on lenses
> Adjustable ultra-bright built-in LED lights
> Magnifiers molded into the bottom of the lens
> Non-slip nose piece
> Lights can be independently turned on or off
> LR44 Batteries included
> Meets ANSI Z87.1-2015
> Material: Lens: High Impact-resistant Polycarbonate

Diopter strength	Item No.
1.5	007.48.045
2.0	007.48.046
2.5	007.48.047
3.0	007.48.048

Supplied With
12 pairs

→ LED Inspectors™

> 99.9% UV Protection
> Anti-fog and scratch-resistant coating on lenses
> Ultra-bright built-in LED lights
> Non-slip nose piece
> On/off switch
> LR44 Batteries included
> Meets ANSI Z87.1-2015
> Material: Lens: High Impact-resistant Polycarbonate

	Item No.
	007.48.049

Dimensional data not binding. Dimensions in mm, inches are approximate. We reserve the right to alter specifications without notice.

Eye and Face Protection

→ Diamondbacks

> 99.9% UV Protection
> Anti-fog and scratch-resistant coating on lenses
> Wrap-around design hugs the face
> Non-slip nose piece and temples
> Meets ANSI Z87.1-2015
> Material: Lens: Impact-resistant Polycarbonate

Frame	Item No.
red	007.48.044
black	007.48.051

→ Safety Mags with Bifocal

> Ultra comfortable
> Adjustable arms: Length + 3/8"; Lateral +/- 30°
> Shatterproof wrap-around lenses
> Anti-fog coating
> Reinforced temples
> Quality construction
> Color: black; Lens: clear

Diopter strength	Item No.
1.5	007.48.035
2.0	007.48.036
2.5	007.48.037
3.0	007.48.038

→ Safety Glasses

> Ultra comfortable
> Adjustable arm length
> Shatterproof wrap-around lenses
> Anti-fog coating
> Reinforced temples
> Quality construction
> Color: black

Lens	Item No.
blue	007.48.028
red	007.48.029
clear	007.48.031
tinted	007.48.032
amber	007.48.033
mirror	007.48.034

→ Safety Glasses, Clear

> With standard arms and interchangeable head band for optimal fit in any situation

Color	Item No.
black	007.48.039

Dimensional data not binding. Dimensions in mm, inches are approximate. We reserve the right to alter specifications without notice.

Jigs

→ Euro Bit Self-Centering Tool

> Engineered to use different sizes of carbide boring bits
> 5 mm bit for shelf pins and attaching hardware with 32 mm attachment screws
> 28 mm (7/64") adapter for #6 wood screws for hardware attachment
> Requires a boring bit with a 10 mm (40 mm) long shank or an adapter for a 28 mm (7/64") twist drill bit

→ Drill Guide

> Material: Steel

Item No.
001.28.600

→ Euro Drill Bits, RH

> Size: 5 mm
> Material: Carbide

Item No.
001.24.700

→ Adapter

> For 28 mm (7/64") drill bit
> Material: Aluminum

Item No.
001.28.602

Note
Drill is not included.

→ 32 mm Adjustable Line Boring Jig

> Made of high impact plastic for long life
> Aluminum bushing inserts for sturdy and straight drilling
> Drill guide fits exactly in insert without allowing drill bit to touch jig
> Provides a self-centering bore
> Improved design prevents clogging by wood chips
> Bits are interchangeable, only one guide necessary
> Material: Plastic/Aluminum

Item No.
001.27.007

Note
Order Euro Bit self-centering tool separately.

Dimensional data not binding. Dimensions in mm, inches are approximate. We reserve the right to alter specifications without notice.

Jigs

→ Drilling Jig for Puck Light

Item No.
001.35.052

Supplied With
1 Jig
1 2 1/4" Forstner bit
1 2 1/8" Forstner bit
1 12" x 3/8" drill bit

→ Drill Bit for Puck Light

> With stop
> High grade steel material for increased drill life
> Allows for deeper wire holes
> Ø X L: 10 x 457 mm (3/8" x 18")
> Material: M2 HSS Steel

Item No.
001.35.053

Supplied With
Hex key

→ Forstner Bit Assembly, for Puck Light

> Superior Austrian quality
> High grade steel material with patented wave cutting edge
> Patented cutting edge drills 10x faster than standard bits
> Modified low-profile brad point tip for flat bottom hole
> Material: HSS Steel

Diameter	Item No.
54 (2 1/8")	001.35.054
57 (2 1/4")	001.35.055

Supplied With
Adjustable depth stop
Collar
Hex key

→ HSS Twist Drill Bit Set, 3 piece

> For drilling deep holes in all types of wood, MDF and acrylic
> With centering tip
> Lengths: Ø8–460 mm (5/16"–18 1/8")
> Ø10–460 mm (3/8"–18 1/8")
> Ø12–250 mm (1/2"–9 13/16")
> Material: HSS Steel

Item No.
001.20.354

Supplied With
1 Bit of each size

→ Häfele Drilling Jig

> Precision drill holes in furniture side panels for leads and switches for Loox lights
> Drill holes for soft closing mechanism for doors, dowels, shelf supports or cruciform mounting plates
> Compact design for already assembled furniture
> For table top thickness: 16, 19 and 25 mm (5/8", 3/4", 1")
> 5 mm (3/16") sleeves for drill holes for mounting plates
> Length: 75 mm (3")
> Drilling sleeves: 8, 10 and 12 mm (5/16", 3/8", 1/2")

Item No.
001.25.080

Dimensional data not binding. Dimensions in mm, inches are approximate. We reserve the right to alter specifications without notice.

Jigs

→ Handle Drilling Jig

> For exact drilling of holes for handles with standard hole distance 96–320 mm (3 13/16"–12 19/32")
> Material: Plexiglass, clear and Aluminum

Item No.
001.35.040

Note
Not suitable for profiles and inset handles.
Must be used with Ø5 mm drill bit.

→ Cabinet Hardware Jig

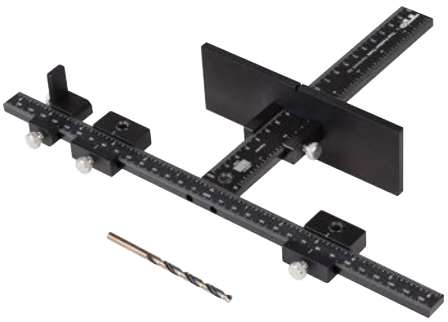

> Material: Aluminum

Color	Item No.
black	001.35.050

→ Cabinet Hardware Jig

> With shelf pin and long handle
> Material: Aluminum

Color	Item No.
black	001.35.051

→ Shelf Pin/Long Handle Attachment

> Converts 001.35.050 to 001.35.051
> Material: Aluminum

Item No.
001.35.059

Dimensional data not binding. Dimensions in mm, inches are approximate. We reserve the right to alter specifications without notice.

Jig

→ Quick-Set Drilling Jig for Handles

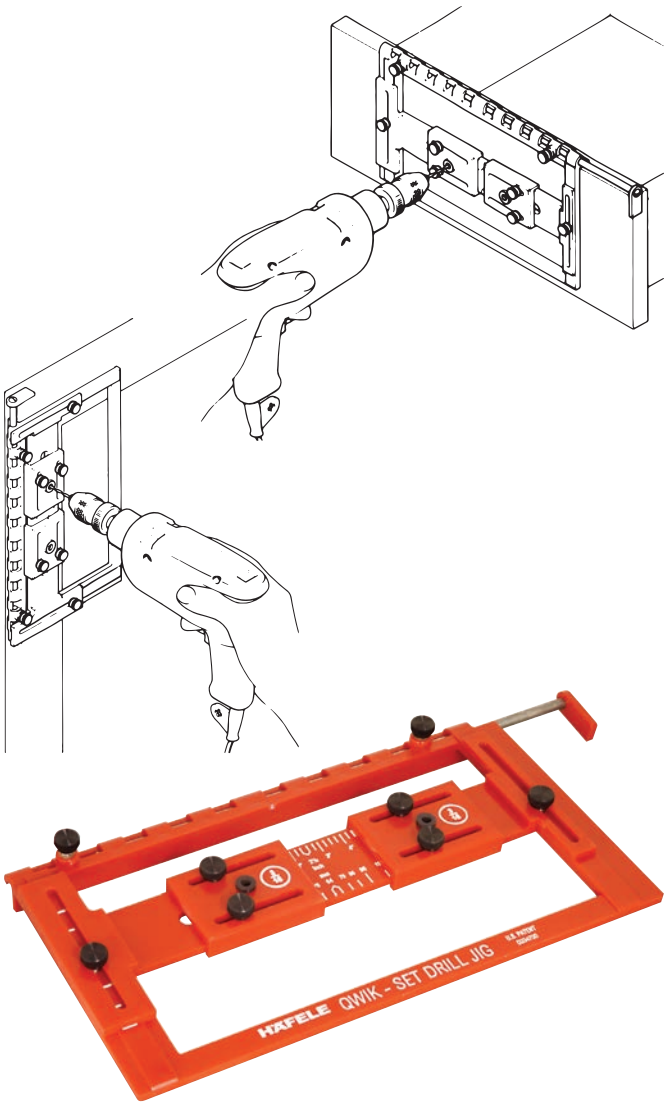

> For precise drilling and positioning of handles on doors, flaps and drawer fronts
> Convertible side stop, can be used horizontally and vertically
> Drilling bushings: for drilling Ø4.3–4.6 mm (11/64"–3/16")
> Drill hole spacing: adjustable from 64–143 mm (2 1/2"–5 5/8")
> Distance from edge: adjustable from 26–103 mm (1 1/16"–4 1/16")
> Material: Plastic with hardened drilling bushings

Color	Item No.
red	001.31.233

→ Euro Handle-It for Pulls and Handles

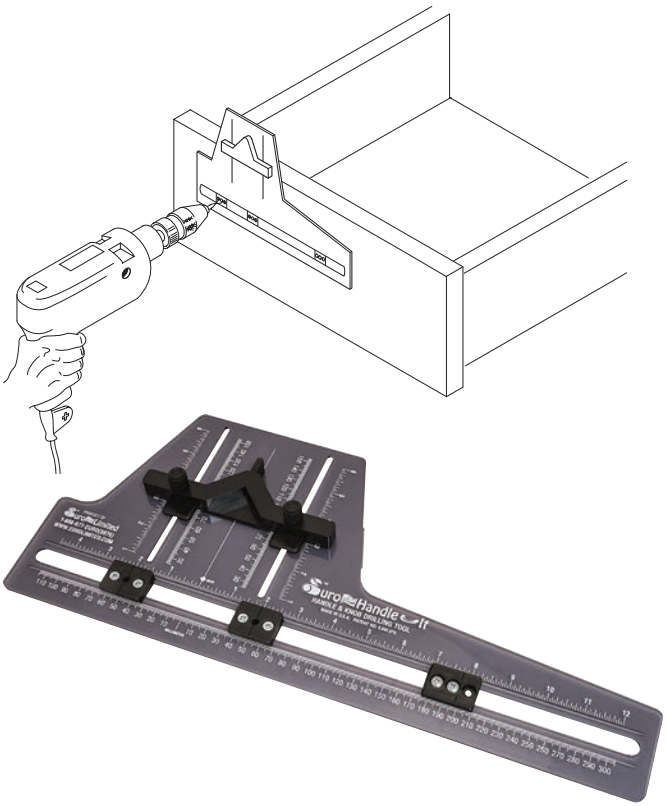

> For pulls on doors or drawer fronts
> Ideal for small to medium size shops
> With metric and inch scale
> Use a 4.5 mm or 3/16" drill
> Material: Polycarbonate with hardened steel bushings; Color: black

Description	Item No.
Jig	001.35.001
Repair kit	001.35.020

Dimensional data not binding. Dimensions in mm, inches are approximate. We reserve the right to alter specifications without notice.

Jig

→ Self-Center Drawer Jig 40"

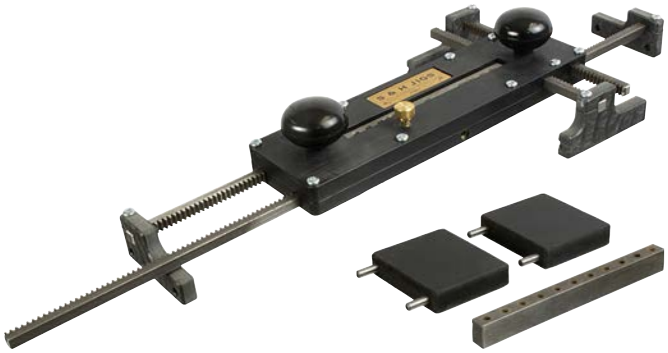

> For quick precision drilling of holes for handles and knobs on cabinet drawer fronts up to 1016 (40") wide and 357 (14") tall
> Material: Steel/Plastic

	Item No.
	001.35.063

→ S&H Door Handle Jig

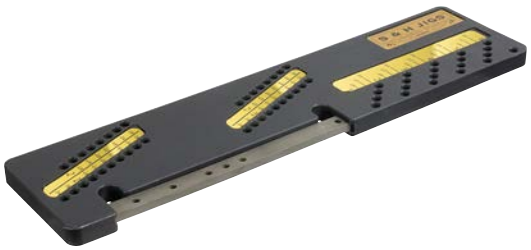

> For quick precision drilling of holes for handles and knobs on cabinet door fronts
> Material: Steel/Plastic

	Item No.
	001.35.065

Dimensional data not binding. Dimensions in mm, inches are approximate. We reserve the right to alter specifications without notice.

This page is left blank intentionally.

Dimensional data not binding. Dimensions in mm, inches are approximate. We reserve the right to alter specifications without notice.

Support Systems and Accessories

→ The 3rd Hand Support System

> Use for crown moulding at angles, countertop backsplashes, hanging dry wall and supporting ceiling panels
> Weight capacity: up to 32 kg (70 lbs.)
> Material: Steel

Description	Item No.
Little hand 420–579 (16.5"–22.8")	003.71.580
3rd hand 1524–3658 (5'–12')	003.71.581

→ 3rd Hand Contractor Pack

> An economic alternative to purchasing individual items
> Material: Steel

	Item No.
	003.71.582

Supplied With
4 3rd Hands
8 Articulating feet
4 Magnetic dust feet
4 Universal feet
Ballistic nylon bag

→ 3rd Hand Accessories

Description	Item No.
Universal foot	003.71.585
Dust barrier foot	003.71.586
3rd hand bag	003.71.588

→ Magnetic Laser Mount

	Item No.
	003.71.583

Dimensional data not binding. Dimensions in mm, inches are approximate. We reserve the right to alter specifications without notice.

Support Systems and Accessories

→ 3rd Hand Magnetic Dust Barrier Door

> 978 mm (38 1/2") wide

	Item No.
	008.55.032

Supplied With
Top rail
Dust door
Carrying bag
10 Magnetic strips

→ 3rd Hand Magnetic Dust Barrier Door System

> 978 mm (38 1/2") wide

	Item No.
	008.55.030

Supplied With
Top rail
Dust door
2 Carrying bags
10 Magnetic strips
2 Dust barrier feet
2 3rd hands

→ 3rd Hand Magnetic Strip

	Item No.
	008.55.031

→ Little Hand XL System

> Use for supporting upper cabinets and sink cut-outs
> Telescoping 597–965 mm (23 1/2"–38")

	Item No.
	008.55.035

Supplied With
2 Little Hands
Carrying bag

→ Upper Hand, Single

> Use for hanging upper cabinets, countertop cut-outs and tub and shower surrounds
> Telescoping 711–1524 mm (28"–60")

	Item No.
	008.55.033

→ Upper Hand

> 2-piece system
> Material: Steel

	Item No.
	008.55.034

Supplied With
2 Upper Hands
Carrying bag
4 Universal feet

Dimensional data not binding. Dimensions in mm, inches are approximate. We reserve the right to alter specifications without notice.

Support Systems and Accessories

> Levelling accuracy: ±1 mm @ 5 m (0.03937" @ 16' 4 7/8")
> Range: Up to 15 m (49' 2 9/16") depending on light conditions
> The accurate, self-leveling point and line lasers
> With Leica Lino everything is plumb and perfectly aligned
> Projects lines or points with absolute precision
> Self-leveling over a range of ±4°
> Proven optics: projected laser lines and points are highly visible and accurate
> Simple operation with only two buttons
> Pendulum Lock

→ Laser Line Level Device – L2

> Material: Steel

	Item No.
	002.84.522

Supplied With
Storage case
Target plate
Magnetic multifunctional adapter
Ball adapter

→ Leica Lino L2G+

> Material: Steel

	Item No.
	002.84.626

Supplied With
Storage case
Target plate
Magnetic multifunctional adapter
Ball adapter

Note
Uses the latest in green laser technology, making the lines more visible and clear.

→ Leica Tripod

> Easy fine adjustment
> Robust tilt head
> Bubble level
> 1 - 4" fixing screw on removable head plate
> Flip levers for easy adjustment
> Weight: 2.4 kg (5.3 lbs.)
> Working height: .70 m (2' 3 9/16") to 1.72 m (5' 7 11/16")
> Material: Aluminum

	Item No.
	002.84.527

Dimensional data not binding. Dimensions in mm, inches are approximate. We reserve the right to alter specifications without notice.

Support Systems and Accessories

→ Leica Laser D2

> A compact, handy, introductory distance measuring tool, specifically designed for indoor applications
> Includes shortcut keys for addition, subtraction, area and volume calculations
> Bluetooth smart
> Measuring Range: 13 mm –100.5 m (1/2"–330')
> Accuracy: ± 2 mm (1/16")
> Material: Plastic

	Item No.
	002.84.536

Supplied With
Batteries
Nylon case with wrist strap and belt loop

→ Leica Disto™ D810

> With the revolutionary "measure with a picture" feature using the integrated camera
> One measurement allows you to read-out height, width, area and diameter of objects
> Large touch screen for quick intuitive operation
> Image download via USB
> Range: 198 m (650') 1 mm (~1/16") accuracy
> 0.1 degree accuracy tilt sensor for high accuracy vertical measurements
> Bluetooth 4.0 Smart

	Item No.
	002.84.610

→ Leica Disto™ E7100i

> Pocket-sized
> Simple four-button interface puts distance and area measurement at your fingertips
> Easily send accurate room measurements to your mobile device
> Bluetooth 4.0 Smart

	Item No.
	002.84.650

Dimensional data not binding. Dimensions in mm, inches are approximate. We reserve the right to alter specifications without notice.

Measuring Tapes

→ Tape Measure

> 5 m (16')
> Erasable note pad
> Compact shock-resistant rubber casing
> Dual thumb and finger locks
> Easy belt clip
> Built-in stainless steel pencil sharpener
> High-contrast black on white scale
> Heavy-duty 26 mm (1") blade with 4 rivet construction

	Item No.
	002.81.643

→ Flatback Tape Measure

> Measures curves and flat panels with precision and ease
> Metric/standard 16' (5 m)

	Item No.
	002.81.641

→ Tape Measure

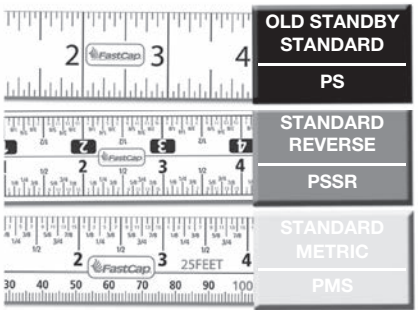

> Erasable notepad
> Built-in pencil sharpener
> Dual locking system
> Heavy-duty belt clip
> High contrast tape
> Compact casing

Description	Item No.
PMS–metric/standard 3.5 m (12')	002.81.604
PMS–metric/standard 5 m (16')	002.81.602
PMS–metric/standard 7.5 m (25')	002.81.603
PSSR–standard reverse 5 m (16')	002.81.612
PSSR–standard reverse 7.5 m (25')	002.81.613
PS–standard 5 m (16')	002.81.620
PMMR–True 32 metric reverse	002.81.645

Note
PMMR features metric measurements that are readable when the tape is extended from either the right or left hand.

Dimensional data not binding. Dimensions in mm, inches are approximate. We reserve the right to alter specifications without notice.

Support Materials

→ Clip Strip

- > Unique roller system for holding notes and paper that surpasses clips, tape or pins
- > Inserted paper is held in place; pulling down releases it
- > Installs with magnets, double-sided tape screws or nuts and bolts
- > W x H: 26 x 57 mm (1" x 2")
- > Material: Aluminum

Length	Item No.
152 (6")	531.31.900
305 (12")	531.31.901
610 (24")	531.31.902
914 (36")	531.31.903

Supplied With
Mounting materials

Dimensional data not binding. Dimensions in mm, inches are approximate. We reserve the right to alter specifications without notice.

Systainer® Tool Boxes

→ Systainer T-Loc Tool Box

> Practical transport and storage
> Solid construction with high-quality materials; With T-Loc rotary lock
> W x D: 400 x 300 mm (15 3/4" x 11 13/16")
> Material: Plastic: Finish: light gray; Handle and T-Loc: red

Height	Item No.
105 (4 1/8")	008.06.550
158 (6 7/32")	008.06.551
210 (8 1/4")	008.06.552
400 x 300 x 315 (15 3/4" x 11 13/16" x 12 3/8")	008.06.553

→ Systainer T-Loc Fitting Case

> With 13 individually removeable compartments
> With T-Loc rotary lock
> W x D x H: 400 x 300 x 105 mm (15 3/4" x 11 13/16" x 4 1/8")
> Material: Plastic

Color/T-Loc	Item No.
light gray/blue	008.05.400

→ Systainer SYS-Roll Transporter

> Easy transport of systainer T-Loc
> Easy stair movement due to extra-large wheels
> Rotating front rollers with brake
> Integrated drawer for storage of small items
> W x D x H: 600 x 440 x 1100 mm (23 5/8" x 17 5/16" x 43 5/16")
> Weight capacity: 45 kg (100 lbs.)
> Material: Plastic

Color	Item No.
light gray/blue	008.06.570

→ Cart for Systainer T-Loc

> Allows ergonomic movement of heavy weights
> Connectable to any systainer
> 4 swivel casters
> W x D x H: 519 x 365 x 157 mm (20 7/16" x 14 3/8" x 6 3/16")
> Weight capacity: 100 kg (220 lbs.)

Color	Item No.
light gray	008.06.523

→ Lifting Strap for Systainer T-Loc

> Designed to carry several systainers keeping the hands free
> Material: Fabric

Color	Item No.
blue	008.06.521

Dimensional data not binding. Dimensions in mm, inches are approximate. We reserve the right to alter specifications without notice.

Systainer® Tool Boxes

→ Systainer Tool Box I

> Stackable and connectable
> 2 spacious open compartments with deep center bar for stowing tools, work materials and accessories
> W x D x H: 396 x 296 x 143 mm (15 19/32" x 11 21/32" x 5 5/8")
> Material: Plastic

Color	Item No.
light gray	008.06.885

→ Systainer Tool Box II

> Stackable and connectable
> 2 spacious open compartments with deep center bar for stowing tools, work materials and accessories
> W x D x H: 396 x 296 x 250 mm (15 19/32" x 11 21/32" x 9 27/32")
> Material: Plastic

Color	Item No.
light gray	008.06.870

→ Systainer SYS-Sort T-Loc Tool Box

> 3 drawers, each with 2 dividers
> Connects to systainer T-Loc
> Locking mechanism prevents unintentional opening of drawer
> The interior can be individually configured with ribs in each drawer to hold dividers
> W x D x H: 396 x 296 x 315 mm (15 19/32" x 11 21/32" x 12 13/32")
> Material: Plastic

Color/T-Loc	Item No.
light gray/blue	008.06.580

Dimensional data not binding. Dimensions in mm, inches are approximate. We reserve the right to alter specifications without notice.

Drawer Systainer® Tool Box

> For storing and transporting small items and consumables
> All drawer systainers can be linked

→ Tool Box with 4 drawers

Drawers W x D x H:
1 – 350 x 250 x 85 mm (13 3/4" x 9 13/16" x 3 3/8")
1 – 172 x 250 x 34 mm (6 3/4" x 9 13/16" x 1 5/16")
2 – 83 x 250 x 34 mm (3 1/4" x 9 13/16" x 1 5/16")
> W x D x H: 400 x 300 x 210 (15 3/4" x 11 1/3/16" x 8 1/4")
> Material: Plastic

Color/Fasteners	Item No.
light gray/blue	008.06.541

→ Systainer® Storage-Box Tool Box

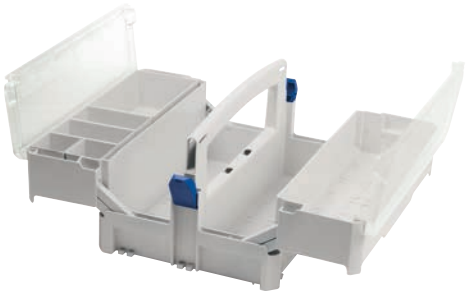

> Stackable and connectable
> Flexible configuration and clear organization of small items
> Fold-out upper compartments for maximum storage space
> With removable insert boxes (2 x small, 2 x medium, 1 x large)
> W x D x H: 396 x 296 x 160 mm (15 19/32" x 11 21/32" x 6 5/16")
> Material: Plastic

Color	Item No.
light gray	008.06.871

→ Tool Box with 9 drawers

Drawers W x D x H:
3 – 172 x 250 x 34 mm (6 3/4" x 9 13/16" x 1 5/16")
6 – 83 x 250 x 34 mm (3 1/4" x 9 13/16" x 1 5/16")
> W x D x H: 400 x 300 x 210 (15 3/4" x 11 1/3/16" x 8 1/4")
> Material: Plastic

Color/Fasteners	Item No.
light gray/blue	008.06.543

→ Systainer® T-Loc SYS-Combi II

> Drawer includes 2 dividers
> W x D x H: 400 x 300 x 265 mm (15 3/4" x 11 13/16" x 10 7/16")
> Material: Plastic

Color/T-Loc	Item No.
light gray/blue	008.06.884

→ Mini Systainer® T-Loc III Set

> With lid insert and box insert
> Includes removable colored boxes and insert with 3 compartments
> W x D x H: 265 x 171 x 142 mm (10 7/16" x 6 3/4" x 5 9/16")
> Material: Plastic

Color/T-Loc	Item No.
light gray/red	008.06.886

Dimensional data not binding. Dimensions in mm, inches are approximate. We reserve the right to alter specifications without notice.

Drawer Systainer® Tool Box

→ Universal Mini Systainer® T-Loc I

> Transparent lid
> 8 compartment insert
> W x D x H: 265 x 171 x 71 mm (10 7/16" x 6 3/4" x 2 13/16")
> Material: Plastic

Color/T-Loc	Item No.
light gray/red	008.06.887

→ Mini Systainer®, 5 compartment

> Transparent lid
> 5 compartment insert
> W x D x H: 265 x 171 x 71 mm (10 7/16" x 6 3/4" x 2 13/16")
> Material: Plastic

Color/T-Loc	Item No.
light gray/red	008.06.888

→ Mini Systainer®, 3 compartment

> Transparent lid
> 3 compartment insert
> W x D x H: 265 x 171 x 71 mm (10 7/16" x 6 3/4" x 2 13/16")
> Material: Plastic

Color/T-Loc	Item No.
light gray/red	008.06.889

→ Mini Systainer®, 6 compartment

> Transparent lid
> 6 compartment insert
> W x D x H: 265 x 171 x 71 mm (10 7/16" x 6 3/4" x 2 13/16")
> Material: Plastic

Color/T-Loc	Item No.
light gray/red	008.06.890

Dimensional data not binding. Dimensions in mm, inches are approximate. We reserve the right to alter specifications without notice.

Systainer® Labels and Dividers

→ Systainer Label Set

> For systainer T-Loc I – IV

	Item No.
	008.06.891

→ Systainer Drawer Divider Set

> Material: Plastic

Color	Item No.
light gray	008.06.893

Supplied With
3 pcs./set

→ Systainer Base Foam

> Material: Plastic

Color	Item No.
black	008.06.894

→ Systainer Drawer Accessory Set

> Material: Plastic

Color	Item No.
light gray	008.06.892

Supplied With
4 medium boxes
8 small boxes
3 dividers
2 cushions

→ Systainer Foam, smooth

> Pick and pluck
> Material: Plastic

Color	Item No.
black	008.06.895

→ Systainer Foam, rigid

> Pick and pluck
> Material: Plastic

Color	Item No.
black	008.06.896

Dimensional data not binding. Dimensions in mm, inches are approximate. We reserve the right to alter specifications without notice.

Batteries

→ E2 Ultimate Lithium Batteries, 1.5V

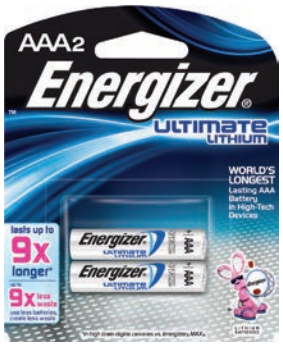

> World's longest lasting battery
> An excellent choice for today's portable technology
> 15-year shelf life
> Works in extreme temperatures

Size	Model No.	Item No.
AAA	L92BP2EN	910.54.943

Supplied With
2 Batteries

→ Replacement Battery, 3V

> Great for remotes, keyless entry and electronic locks

Model	Item No.
CR 2032	002.99.032
CR 2450 - For FL 110, 111, 112 and 113	002.99.033
CR 2430	002.99.034

Supplied With
4 Batteries

→ Industrial Batteries

> 7-year shelf life

Size	Voltage	Model No.	Item No.
C	1.5	CBATEN	910.54.954
D	1.5	DBATEN	910.54.955
9V	–	9VBATEN	910.54.956

Supplied With
12 Batteries

→ Industrial Batteries, 1.5V

> 7-year shelf life

Size	Model No.	Item No.
AAA	AAABATEN	910.54.953
AA	AABATEN	910.54.980

Supplied With
4 Batteries

Dimensional data not binding. Dimensions in mm, inches are approximate. We reserve the right to alter specifications without notice.

Drill Bits

→ Standard Phillips Drive

> 6 mm (1/4") Hexagonal shaft
> Material: Steel

Length	Size	Item No.
26 (1")	#1	006.40.270
26 (1")	#2	006.40.280
26 (1")	#3	006.40.290
51 (2")	#2	006.40.281
51 (2")	#3	006.40.291

Supplied With
10 pcs.

→ Standard Pozi Drive

> 6 mm (1/4") Hexagonal shaft
> Material: Steel

Length	Size	Item No.
26 (1")	#1	006.37.301
26 (1")	#2	006.37.310
26 (1")	#3	006.37.329
51 (2")	#1	006.37.276
51 (2")	#2	006.37.285
51 (2")	#3	006.37.294

Supplied With
10 pcs.

→ Standard Square Drive

> 1/4" Hexagonal shaft
> Material: Steel

Length	Size	Item No.
26 (1")	#1	006.37.874
26 (1")	#2	006.37.883
51 (2")	#1	006.37.810
51 (2")	#2	006.37.829
152 (6")	#2	006.37.828

Supplied With
10 pcs.

→ Phillips #2 Reduced Tip Bit

> Length: 50 mm (2")

	Item No.
	006.40.064

Supplied With
10 pcs.

→ Premium Phillips Bi-Torsion Drive, Diamond Coated

> Diamond coated feature reduces cam-out (stripping) and increases the lifespan of the driver bit
> Bi-torsion feature reduces screw head breakage and increases the lifespan of the driver bit
> Material: Steel

Length	Size	Item No.
26 (1")	#1	006.40.041
26 (1")	#2	006.40.051
26 (1")	#3	006.40.052
51 (2")	#1	006.40.053
51 (2")	#2	006.40.054
51 (2")	#3	006.40.055

Supplied With
10 pcs.

→ Premium Square-Plus Bi-Torsion Drive

> Bi-torsion feature reduces screw head breakage and increases the lifespan of the driver bit
> Square-plus feature reduces cam-out (stripping) and increases the lifespan of the driver bit
> Material: Steel

Length	Size	Item No.
26 (1")	#1	006.37.390
26 (1")	#2	006.37.391
26 (1")	#3	006.37.392
51 (2")	#1	006.37.401
51 (2")	#2	006.37.402
51 (2")	#3	006.37.403

Supplied With
10 pcs.

→ Premium Square-Plus Drive

> Square-plus feature reduces cam-out (stripping) and increases the lifespan of the driver bit
> Material: Steel

Length	Size	Item No.
89 (3 1/2")	#2	006.37.406
152 (6")	#2	006.37.560

Supplied With
10 pcs.

Dimensional data not binding. Dimensions in mm, inches are approximate. We reserve the right to alter specifications without notice.

Hand Tools

→ Screwdrivers

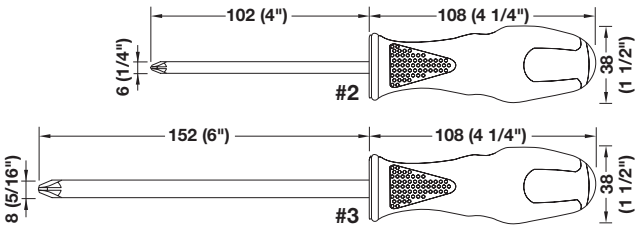

> Comfort-Grip ergonomic handle
> Tip is hardened and magnetized
> Pozi drive works best for hinge adjustments and connector installation
> Material: Shaft: Steel; Finish: Chrome-plated
Hand grip: Plastic; Color: black and red

Size	Item No.
pozi #2	006.28.292
phillips drive #2	006.28.282
square drive #2	006.28.272

→ Kraftform Nut Driver

> Kraftform ergonomic handle
> 1/4" Hex drive
> Material: Hardened Steel; Finish: nickel-plated
Handle: Plastic; Color: green/black

Item No.
008.26.120

→ Premium Bit-Holding Screwdrivers

> 1/4" hex drive magnetic socket
> Shank length: 9.5 mm (3/8")
> Handle length: 54 mm (2 1/8")

Item No.
006.40.321

> Kraftform ergonomic handle
> 1/4" hex drive magnetic socket
> Handle length: 112 mm (4 7/16")
> Blade length: 120 mm (4 3/4")

Item No.
006.40.326

→ Screwdriver for Torx Screws

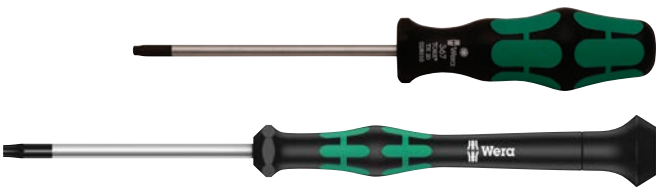

> Kraftform ergonomic handle
> Material: Shaft: Steel; Hand grip: Plastic

Size	Item No.
T15	006.28.170
T20	006.28.190
T20 with handle	006.28.180

Dimensional data not binding. Dimensions in mm, inches are approximate. We reserve the right to alter specifications without notice.

Hand Tools

→ Magnetizer/Demagnetizer

> Rub driver on face side to magnetize the tool
> Rub driver on edge to demagnetize the tool

Item No.
006.30.215

→ T-handle Hex Driver

> Material: Shaft: Steel; Hand grip: Plastic

Size	Item No.
2.5	006.28.034
3.5	006.28.035

→ Hex Bit

> Material: Steel

Size	Item No.
2.5 x 25	006.37.194
3 x 1/4"	006.37.930
4 x 1/4"	006.37.945

Supplied With
10 pcs.

→ Premium Bit-Holders

> Holds both 26 mm (1") and 51 mm (2") style bits
> Strong permanent magnet with quick-release chuck

→ Universal Bit Holder – 51 mm (2")

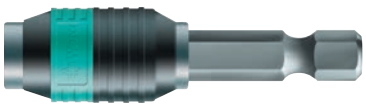

Item No.
006.40.319

→ Universal Bit Holder with Ring Magnet – 51 mm (2")

> Ring magnet securely holds screws on driver bit

Item No.
006.40.318

→ Torx Bit

> Material: Steel

Size	Item No.
T20 x 50	006.37.055
T20 x 25	006.37.880
TS25 x 50	006.37.174
TS25 x 25	006.37.164

→ Spanner Bit

> #10 x 25
> Material: Steel

Item No.
006.40.282

Supplied With
10 pcs.

Dimensional data not binding. Dimensions in mm, inches are approximate. We reserve the right to alter specifications without notice.

Tools

→ Metric Folding Wrench Set

> Ergonomic handle
> Push button key release
> Sizes: 2, 2.5, 3, 4, 5, 6 and 8 mm

	Item No.
	006.28.410

→ Laminate Trimming Bits

> Can be resharpened
> Will not scratch laminates
> Square teflon bearing
> Glue will not stick to bearing
> Material: Bearing: injection molded teflon
Cutters: C4 high quality carbide

Description	Item No.
6 (1/4") shank, 19 (3/4") bit	003.76.100
6 (1/4") shank, 13 (1/2") bit	003.76.101

→ Hexplus T Handle Hex Key

> 5 mm (3/16")
> For 007.91.078 above

	Item No.
	006.32.036

→ Premium Bit Sets

> Compact fold-out organizer case
> Includes magnetic bit holder

	Item No.
	006.37.085

Supplied With
Small and Large flat head
#1 and #2 Phillips drive
#1 and #2 Pozi drive

	Item No.
	006.37.086

Supplied With
Small and Large flat head
#1 and #2 Phillips drive
#1 and #2 Square drive

→ Rapidaptor Case

	Item No.
	006.40.386

→ Driver Bits

> 6 mm (1/4") drive with 4 mm (5/32") ball tipped hex driver

Length	Item No.	Bulk
120	001.26.605	-
80	006.40.000	006.40.001

Bulk Supplied With
100 pcs./pkg.

Dimensional data not binding. Dimensions in mm, inches are approximate. We reserve the right to alter specifications without notice.

Bits

→ Machine Boring Bit

Description	Item No.
Adaptor 10 (3/8") F/2.4 (1/16")	001.06.849
Carbide LH Ø 2.4 x 57 (1/16" x 2 1/4")	001.06.851
Carbide RH Ø 3 x 57 (1/8" x 2 1/4")	001.06.855
Carbide LH Ø 3 x 57 (1/8" x 2 1/4")	001.06.856
Carbide RH 5 x 57 (3/16" x 2 1/4")	001.06.868
Carbide LH 5 x 57 (3/16" x 2 1/4")	001.06.869
Carbide RH Ø 5 x 70 (3/16" x 2 3/4")	001.08.020
Carbide LH Ø 5 x 70 (3/16" x 2 3/4")	001.08.021
Carbide Tip RH V-Point 5 x 57 (3/16" x 2 1/4")	001.08.060
Carbide Tip LH V-Point 5 x 57 (3/16" x 2 1/4")	001.08.061
Carbide LH 8 x 57 (5/16" x 2 1/4")	001.06.870
Carbide RH Ø 8 x 70 (5/16" x 2 3/4")	001.08.022
Carbide LH Ø 8 x 70 (5/16" x 2 3/4")	001.08.023
Carbide LH Ø 10 x 57 (3/8" x 2 1/4")	001.06.875
Carbide RH Ø 10 x 57 (3/8" x 2 1/4")	001.85.408
Carbide RH Ø 12 x 57 (1/2" x 2 1/4")	001.06.876
TS.W/Center Spur RH Ø 14 x 70 (9/16" x 2 3/4")	001.20.187
Carbide RH Ø 15 x 57 (19/32" x 2 1/4")	001.08.000
Carbide Ø 16.5 x 57 (5/8" x 2 1/4")	001.24.194
Carbide RH Ø 18 x 57 (11/16" x 2 1/4")	001.06.365
Carbide RH 19 x 57 (3/4" x 2 1/4")	001.08.014
Carbide RH Ø 20 x 70 (13/16" x 2 3/4")	001.08.001
Carbide RH Ø 20 x 57 (13/16" x 2 1/4")	001.08.002
Carbide LH Ø 20 x 57 (13/16" x 2 1/4")	001.08.003
Carbide RH 20 x 57 (13/16" x 2 1/4") Flush Rafix F/16 (5/8")	001.24.309
Carbide RH 20 x 57 (13/16" x 2 1/4") Flush Rafix F/19 (3/4")	001.24.327
Carbide LH 20 x 57 (13/16" x 2 1/4") Flush Rafix F/19 (3/4")	001.24.337
Carbide RH 20 x 70 (13/16" x 2 3/4") Flush Rafix F/19 (3/4")	001.24.340
Carbide LH 20 x 70 (13/16" x 2 3/4") Flush Rafix F/19 (3/4")	001.24.341
Carbide RH 20 x 47 (13/16" x 1 7/8") Flush Rafix F/19 (3/4")	001.24.342
Carbide RH Ø 26 x 57 (1" x 2 1/4")	001.08.004
Carbide RH Ø 28 x 70 (1 1/8" x 2 3/4")	001.08.012
Carbide RH Ø 30 x 57 (1 3/16" x 2 1/4")	001.04.190
Carbide RH Ø 35 x 70 (1 3/8" x 2 3/4")	001.08.006
Carbide RH Ø 35 x 57 (1 3/8" x 2 1/4")	001.08.013
Carbide RH Ø 40 x 57 (1 5/8" x 2 1/4")	001.06.865
W/Center Spur RH Ø 55 x 57 (2 3/16" x 2 1/4")	001.07.513
W/Center Spur RH Ø 58 x 57 (2 5/16" x 2 1/4")	001.07.522
W/Center Spur RH 60 x 57 x 10 (2 3/8" x 2 1/4" x 3/8")	001.08.040
W/Center Spur RH 68 x 70 x 10 (2 11/16" x 2 3/4" x 3/8")	001.08.016
W/Center Spur RH 80 x 70 x 10 (3 1/8" x 2 3/4" x 3/8")	001.08.050

→ Drill Bit Kit for Hinge Machines

> Material: Steel

Item No.
001.06.871

Supplied With
Carbide bit - 35 x 57 mm
2 Carbide LH bits - 8 x 57 mm

→ Brad Point Drill Bit Set

> Premium 8 piece
> Sizes: 3, 4, 5, 6, 7, 8, 9 and 10 mm
> Precision German-made
> Material: Chrome Vanadium

Item No.
001.20.279

→ Twist Drill Bit Set

> 25 piece
> Sizes: 1–13 mm
> Material: High-speed Steel

Item No.
001.04.181

→ Multipurpose Carbide Tip Drill Bit Set

> 118° with 4 sharpened edges
> Sizes: 4, 5, 6, 8 and 10 mm
> Easy drilling into hard wood, metal and tile
> Material: Carbide

Item No.
001.74.000

Dimensional data not binding. Dimensions in mm, inches are approximate. We reserve the right to alter specifications without notice.

Drill Bits

→ Brad Point Drill Bit

> Material: High-speed Steel

Ø x L	Item No.
10 x 254 (3/8" x 10")	001.85.480
10 x 305 (3/8" x 12")	001.85.481
10 x 356 (3/8" x 14")	001.85.482
8 x 254 (5/16" x 10")	001.85.430
8 x 305 (5/16" x 12")	001.85.431
8 x 406 (5/16" x 16")	001.85.432
8 x 457 (5/16" x 18")	001.85.433

→ Brad Point Drill Bit

> 6 mm (1/4") hex shank
> Material: High-speed Steel

Ø	Item No.
3 (1/8")	001.20.503
4 (5/32")	001.20.504
5 (3/16")	001.20.505
6 (1/4")	001.20.506
8 (5/16")	001.20.508
9 (23/64")	001.20.509
10 (25/64")	001.20.510
12 (15/32")	001.20.512
13 (33/64")	001.20.513
14 (35/64")	001.20.514

→ Brad Point Twist Drill Bit

> Material: High-speed Steel

Ø	Item No.
5 (13/64")	001.20.518
7.5 (19/64")	001.20.061
8 (5/16")	001.20.123
10 (25/64")	001.20.519
12 (15/32")	001.20.169
15 (19/32")	001.20.540
20 (25/32")	001.20.541

→ Brad Point Twist Drill Bit

Description	Item No.
Carbide 5 (13/64") L 85 (3 3/8")	001.20.098
*Carbide 5 (13/64") with collar L 104.5 (4 1/8")	001.24.498
HSS 10 (25/64") w/stop ring	006.47.012
Carbide 10 (25/64") w/stop ring	006.47.076

Note
*Can be used with red jig on page **11.29**.

→ Twist Drill Bit

> Material: High-speed Steel

Ø x L	Length	Item No.
3.2 (1/8")	9 cm	001.41.079
5 (13/64")	9 cm	001.41.168
7 (9/32")	10.5 cm	001.41.220
8 (5/16")	11.5 cm	001.41.248
10 (25/64")	13 cm	001.41.293
15 (19/32")	16.2 cm	001.06.034
20 (25/32")	20.5 cm	001.06.061

→ Special Bit

> For press-fit connector
> Length: 63 mm (2 1/2")

Version	Item No.
HSS	006.47.012
HM-tipped	006.47.076

Dimensional data not binding. Dimensions in mm, inches are approximate. We reserve the right to alter specifications without notice.

Specialty Bits

→ Vix Bit

> Self-centering
> Adjustable for depth
> Material: Steel

For use with	Item No.
#2, #3 and #4 screws 5/64" bit	001.42.061
#5 and #6 screws 7/64" bit	001.42.030
#14 screws 13/64" bit	001.42.020
#8, #9 and #10 screws 9/64" bit	001.42.060

→ Forstner Style Drill Bit

> Length: 139 mm
> Material: Carbide

Description	Item No.
*10 (25/64")	001.24.319
*12 (15/32")	001.24.489
*15 (19/32")	001.24.443
*20 (25/32")	001.24.425
*20 (25/32") countersunk	001.24.426

Note
*Can be used with red jig on page **11.29**.

→ Wave Cutter Drill Bit

Description	Item No.
20 (25/32")	001.04.156
35 (1 3/8")	001.04.157

Dimensional data not binding. Dimensions in mm, inches are approximate. We reserve the right to alter specifications without notice.

Support Materials

→ Measure Master Pro 4020 Calculator

> Work in and convert between any building dimensions, including metric
> Linear, area and volume measurements
> Find weight and weight per volume
> Instant solutions for circle area, circumference, arcs & more
> Material: Plastic

Item No.
002.80.211

→ SpeedClip

> Easily clips over your pants or belt
> Can hold and sharpen your pencil
> Material: Plastic

Item No.
007.46.929

→ ProHold

> 9 neodymium, high performance magnets for extra strong hold, heavy duty velcro strap
> Fits on wrist or drill
> Material: Nylon, Rubber

Item No.
007.46.936

→ Accuscribe Pro

> Non-rocking flat bottom, built in pencil sharpener
> Material: Plastic

Item No.
002.81.850

→ Parallel Scriber

> Wide flat blade
> Easy adjustable thumb wheel
> Material: Plastic

Item No.
002.81.846

Dimensional data not binding. Dimensions in mm, inches are approximate. We reserve the right to alter specifications without notice.

Support Materials

→ Electric Trim Ring

Markings every 6 mm (1/4") allowing you to trim the depth of the ETR.

> Add a finishing touch to your installation work
> Designed for single or double outlets

Description	Color	Item No.
Single	white	827.57.700
Double		827.57.710
Single	hard rock maple	827.57.100
Double		827.57.110
Single	black	827.57.300
Double		827.57.310
Single	almond	827.57.400
Double		827.57.410

→ Tri-Blade Utility Knife

> Comfortable rubber grip
> Store 2 extra blades in knife
> Retractable, self-locking blade
> Material: Housing: Plastic; Blades: Steel; Hand grip: Rubber

	Item No.
	000.33.130

→ Replacement Blades

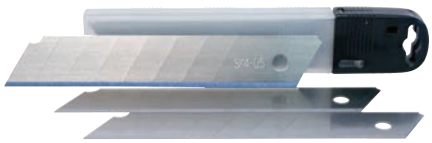

> For Tri-blade knife above

	Item No.
	000.33.131

Supplied with
10 blades

→ Flush Cut Trimmers

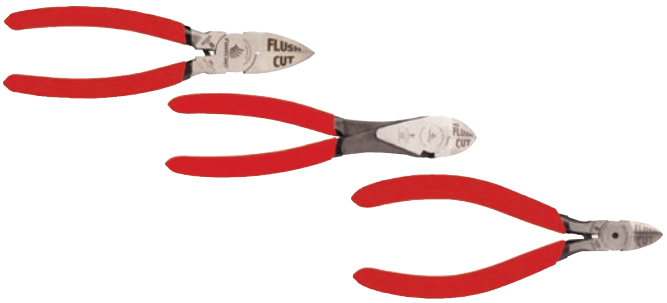

> Flush cuts edgebanding and brad nails
> Easy to sharpen
> Material: Steel

Description	Item No.
Single	006.13.470
Micro	006.13.471
Heavy duty	006.13.472

Note
Not recommended for 3 mm (1/8") or thicker edgebanding.

→ Power Shears

> Small and compact
> Razor sharp to cut through the toughest material
> Material: Steel

	Item No.
	006.17.010

→ FastBreak

> Great for any width
> Sand two edges at once
> Storage for extra sandpaper
> Material: Plastic; Color: red

Size	Item No.
Small	005.51.930
Large	005.51.935

Dimensional data not binding. Dimensions in mm, inches are approximate. We reserve the right to alter specifications without notice.

Support Materials

→ Fastwrap

> Hook and loop Velcro®
> Can be used multiple times
> 13 mm x 3 m (1/2" x 10')
> Material: Velcro®

	Item No.
	007.81.075

→ TapeNix Temporary Drawer Pull

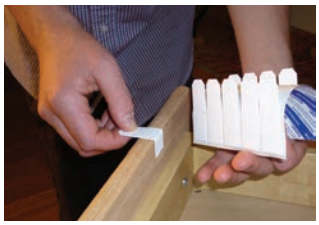

> Material: Peel & Stick

Color	Item No.
white	114.99.802

Supplied with
200 pcs.

> Material: Plastic

	Item No.	Packing
	114.99.800	100 pcs.
	114.99.801	10 pcs

→ Kaizen Foam

> Separates between the layers creating a perfect fit for all your tools in drawers and on walls
> W x H: 610 x 1219 mm (24" x 48")
> Color: black/white

Depth	Item No.
22 (7/8")	007.80.110
29 (1 1/8")	007.80.111
57 (2 1/4")	007.80.112

Dimensional data not binding. Dimensions in mm, inches are approximate. We reserve the right to alter specifications without notice.

Support Materials

→ Softwax Kit

> For touch-ups and repairs

	Item No.
	007.30.300

→ Refill Stick

Color Code	Color	Item No.
#01	white	007.30.301
#02	ivory	007.30.302
#03	beige	007.30.303
#04	sand	007.30.304
#05	taupe	007.30.305
#06	light	007.30.306
#08	camel	007.30.308
#09	mocha	007.30.309
#10	hot chocolate	007.30.310
#11	red	007.30.311
#12	green	007.30.312
#14	dark chocolate	007.30.314
#15	coffee	007.30.315
#16	milk chocolate	007.30.316
#18	rust	007.30.318
#19	burgundy	007.30.319
#20	black	007.30.320

Note
Other colors available upon request.

→ Wax Wedge Refill

	Item No.
	007.30.328

→ Buffing Pad Refill

	Item No.
	007.30.329

Dimensional data not binding. Dimensions in mm, inches are approximate. We reserve the right to alter specifications without notice.

Support Materials

→ 3 in 1 Repair Stick

> Industrial quality filler and marker
> Patent pending leveler cap used to remove and level the filler

Color	Item No.
black	007.30.200
true white	007.30.201
golden oak	007.30.202
light grey	007.30.203
cherry	007.30.204
walnut	007.30.205
perfect brown	007.30.206
natural	007.30.207
honey	007.30.208
red mahogany	007.30.209
caramel	007.30.210
dark grey	007.30.211
white	007.30.212
brown	007.30.213
white stain	007.30.214

black **true white** **golden oak** **light grey**

cherry **walnut** **perfect brown** **natural**

honey **red mahogany** **caramel** **dark grey**

white **brown** **white stain**

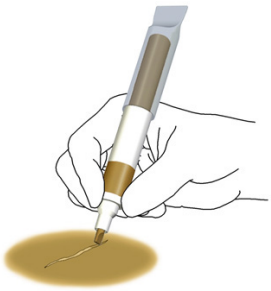

Step 1
Using marker tip, completely color in areas of scratch

Step 2
Using wax stick, rub in fill material until scratch is filled

Step 3
Using leveler, skim off excess fill material until wax is completely removed and scratch fill is flush

Dimensional data not binding. Dimensions in mm, inches are approximate. We reserve the right to alter specifications without notice.

This page is left blank intentionally.

Dimensional data not binding. Dimensions in mm, inches are approximate. We reserve the right to alter specifications without notice.

Support Materials

→ Wiping Cloths

> Premium, new mill white smooth knits
> Pre-cut to wiper size 254 x 254 mm (10" x 10") through 508 x 508 mm (20" x 20")
> Top quality, low-lint
> Great for painting, staining/polishing
> Material: 100% Cotton; Color: white

Size	Item No.
5 lbs.	008.54.590
10 lbs.	008.54.598
25 lbs.	008.54.595
50 lbs.	008.54.599

→ Wiping Cloths

> New mill white smooth knit
> Pre-cut to 457 x 457 mm (18" x 18")
> No seams
> Material: 100% Cotton

Color	Item No.
white	008.54.597

Supplied with
50 pcs.

→ Wiping Cloths, colored

> Pre-washed
> Net weight: 25 lbs.
> Material: 100% New Cotton Knit

	Item No.
	008.54.588

Dimensional data not binding. Dimensions in mm, inches are approximate. We reserve the right to alter specifications without notice.

Support Materials

→ Terry Cloth Towels

> L x W: 406 x 482 mm (16" x 19")
> Material: 100% Cotton

	Packing	Item No.
	12 pcs.	008.54.585
bulk	144 pcs.	008.54.582

Note
Bulk – 12 bags of 12 towels per box.

→ Stain Pad

> Excellent for small to medium staining and buffing jobs
> L x W x H: 102 x 127 x 19 mm (4" x 5" x 3/4")
> Material: Foam Pad covered with Terry Cloth

	Item No.
	008.54.587

Supplied With
25 pcs. / pack

→ Tack Cloth

> L x W: 457 x 914 mm (18" x 36")
> Color: tan

	Packing	Item No.
	1 pc.	008.54.586
bulk	144 pcs.	008.54.583

→ Crimped Cheese Cloth

L x W: 254 x 330 mm (10" x 13")
Material: 100% Cotton

	Item No.
	008.54.589

Supplied With
35 sheets / roll

Dimensional data not binding. Dimensions in mm, inches are approximate. We reserve the right to alter specifications without notice.

Tape

→ 3M ScotchBlue™ 2090 Painter's Tape

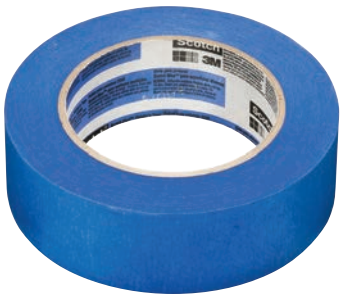

> For multi-surfaces
> Removes cleanly without adhesive transfer or surface damage for up to 14 days, even in direct sunlight
> Medium adhesion tape is ideal for painted walls and trim, woodwork, glass and metal
> Length: 55 m (60 yards)
> Color: blue

Size	Item No.
19 (3/4")	007.81.189
25 (1")	007.81.192
38 (1 1/2")	007.81.193
50 (2")	007.81.194

→ General Purpose Masking Tape

> Designed for general use in packaging, bundling and labeling
> Length: 55 m (60 yards)
> Color: tan

Size	Item No.
19 (3/4")	007.81.199
25 (1")	007.81.195
38 (1 1/2")	007.81.196
50 (2")	007.81.197

→ Blue Painter's Tape

> For interior and exterior use on painted walls, glass, vinyl, metal and wood surfaces
> Not recommended for use on wallpaper, unpainted wallboard, ceiling tile or with uncured coatings
> Medium adhesion
> UV-resistant
> Easy, no-residue removal
> Prevents lifting and paint seepage for cleaner paint lines
> Removes cleanly up to 14 days without surface damage
> Length: 55 m (60 yards)
> Color: blue

Width	Item No.
18 (11/16")	007.81.184
25 (1")	007.81.185
36 (1 7/16")	007.81.186
48 (1 7/8")	007.81.187

→ Clear Carton Sealing Tape

> For manual or automated industrial carton sealing of medium-weight cartons in normal manufacturing and shipping environments
> Instant, permanent bond to a wide range of substrates and surfaces
> Special release coating for consistent, low force unwind off the roll
> Performs reliably to the core for efficient tape consumption
> High-tack adhesive for a long-lasting, secure seal
> W x L: 48 mm x 99.67 m (1 7/8" x 109 yards)

	Item No.
	001.81.280

Dimensional data not binding. Dimensions in mm, inches are approximate. We reserve the right to alter specifications without notice.

Tape Dispenser

→ Standard

> Tape width: max. 51 mm (2")
> Material: Steel/Plastic

	Item No.
	007.81.340

Note Tape is not included.

→ Professional

> Tape width: max. 51 mm (2")
> Material: Steel/Plastic

	Item No.
	007.81.341

Note Tape is not included.

→ Deluxe Silencer

> Tape width: max. 51 mm (2")
> Material: Steel/Plastic

	Item No.
	007.81.342

Note Tape is not included.

Clear carton sealing tape page 12.100

Dimensional data not binding. Dimensions in mm, inches are approximate. We reserve the right to alter specifications without notice.

This page is left blank intentionally.

Dimensional data not binding. Dimensions in mm, inches are approximate. We reserve the right to alter specifications without notice.

Tape

→ Contractor Grade Cloth Duct Tape

> For use in the HVAC industry to repair thermal insulation and flexible ducts, and to seal metal ductwork
> Can also be used to seam bottom boards and for patching, seaming and sealing for manufactured housing
> Used for general purpose packaging, bundling, holding, wrapping and waterproofing, asbestos and mold remediation
> Cold temperature adhesion
> Excellent holding power with good conformability
> Easy to unwind and tear
> Made using Polybonded CO-EX Technology®
> Tested in accordance with UL 723; FSI 0/SDI 0; US Green Building Council – LEED® Point Contributor Product
> L x W: 55 m (60 yards) x 48 mm (1 7/8")
> Color: silver

Item No.
079.00.130

→ T-Rex Heavy Duty Duct Tape

> For use on rough or dirty surfaces
> For heavy duty repairs that demand a ferociously strong hold
> Can also be used as a bottom board tape in the manufactured housing industry
> All-weather performance
> Quick stick, even to rough or dirty surfaces
> Reinforced backing, extra-thick adhesive
> Superior holding power
> Made using Polybonded CO-EX Technology®
> L x W: 32 m (35 yards) x 48 mm (1 7/8")
> Color: metallic silver

Item No.
079.00.140

→ Speed Tape

> Heavy duty 2-sided tape
> Great for mounting/aligning drawer faces
> For veneers and laminates, peel off the liner and stick
> High quality adhesive
> 15 m (50')
> Material: Acrylic

Size	Item No.
6 (1/4")	003.58.248
13 (1/2")	003.58.247
26 (1")	003.58.240
38 (1 1/2")	003.58.243
51 (2")	003.58.241
165 (6 1/2")	003.58.242

Dimensional data not binding. Dimensions in mm, inches are approximate. We reserve the right to alter specifications without notice.

Tape

→ FrogTape® Painter's Tape

> For interior or exterior use on cured painted walls, wood trim, glass and metal
> Medium adhesion
> Exclusive PaintBlock® Technology
> Prevents paint bleed to deliver very sharp lines
> 21-day clean removal
> Withstands direct sunlight for up to 7 days
> Housed in a plastic canister to protect tape edges
> Meets ASTM D 6123/D 6123M-97 (2012), Type I
> Length: 55 m (60 yards)
> Color: green

Width	Item No.
25 (1")	007.81.240
36 (1 7/16")	007.81.241
48 (1 7/8")	007.81.242

→ FrogTape® Pro Grade Painter's Tape

> For interior or exterior use on cured painted walls, wood trim, glass and metal
> Medium adhesion
> Exclusive PaintBlock® Technology
> Prevents paint bleed to deliver very sharp lines
> 14-day clean removal
> UV resistant
> Length: 55 m (60 yards)
> Color: blue

Width	Item No.
36 (1 7/16")	007.81.243
48 (1 7/8")	007.81.244

Supplied with
007.81.243 - 4 rolls
007.81.244 - 3 rolls

Dimensional data not binding. Dimensions in mm, inches are approximate. We reserve the right to alter specifications without notice.

Support Materials

→ Premium 70 Gauge Cast Film

> 457 mm x 457 m (18" × 1500') roll

Description	Item No.
Stretch wrap	007.81.044
Dispenser	007.81.007

→ Plastic Handle

> For 5” stretch wrap 007.81.045

	Item No.
	007.81.049

→ Stretch Wrap

corrugated handle

plastic handle

→ Standard

> Gauge: 80
> 305 m (1000') rolls

Description	Size	Item No.	Packing
With corrugated handle	(5" × 1000’) 127 mm x 305 m	007.81.045	1 roll
	(3" × 1000’) 76 mm x 305 m	007.81.047	
With plastic handle	(5" × 1000’) 127 mm x 305 m	007.81.046	12 rolls (includes 1 plastic handle)
	(3" × 1000’) 76 mm x 305 m	007.81.048	18 rolls (includes 1 plastic handle)

→ Heavy Duty

> Gauge: 120
> 213 m (700') rolls

Description	Size	Item No.	Packing
With corrugated handle	(5" × 700') 127 mm x 213 m	007.81.250	1 roll
	(3" × 700') 76 mm x 213 m	007.81.252	
With plastic handle	(5" × 700') 127 mm x 213 m	007.81.251	12 rolls (includes 1 plastic handle)
	(3" × 700') 76 mm x 213 m	007.81.253	18 rolls (includes 1 plastic handle)

→ Stretch Wrap – Economical

> Premium film constructed with a 1.75" core
> Better puncture and tear resistance at lower gauges
> One EZ Brake X-wrapper handle per case
> Most economical wrap available

Size	Item No.	Packing
127 mm x 305 m (5" × 1000') 80EQ	007.81.255	12 rolls
76 mm x 305 m (3" × 1000') 80EQ	007.81.257	18 rolls
127 mm x 305 m (5" × 700') 120EQ	007.81.256	12 rolls
76 mm x 305 m (3" × 700') 120EQ	007.81.258	18 rolls

Supplied with
Plastic handle

Dimensional data not binding. Dimensions in mm, inches are approximate. We reserve the right to alter specifications without notice.

Extension Cords

→ Contractor Grade Extension Cord

> Primelight® indicator light shows when power is on
> Oversized plugs & strain reliefs prevent wire from separating from the plugs
> Brass, nickel-coated blade resists corrosion & arcing
> Water resistant
> Flame retardant
> Flexible in temperatures from -40° – +140° F
> 15A/125V/1875W
> cULus or equivalent certified
> Color: yellow

L x W x H x D	Item No.
7.6 m x 229 mm x 394 mm x 76 mm (25' x 6 1/4" x 13" x 2")	008.74.200
15.2 m x 159 mm x 330 mm x 51 mm (50' x 6 1/4" x 13" x 2")	008.74.201
30.5 m x 159 mm x 330 mm x 51 mm (100' x 9" x 15 1/2" x 3")	008.74.202

→ Bulldog Tough Extension Cord

> Primelight® indicator light shows when power is on
> If the light fails, it will not affect the operation of the extension cord
> Brass, nickel-coated blade resists corrosion
> Flexible in temperatures from -58° – +221° F
> Water, oil and abrasion resistant; Flame retardant
> Ultra Flexible; Lifetime warranty
> 15A/125V/1875W; cULus or equivalent certified
> Color: yellow

L x W x H x D	Item No.
7.6 m x 133 mm x 330 mm x 51 mm (25' x 6 1/4" x 13" x 2")	008.74.203
15.2 m x 190.5 mm x 381 mm x 63.5 mm (50' x 7 1/2" x 15" x 2 1/2")	008.74.204
30.5 m x 159 mm x 394 mm x 76 mm (100' x 9" x 15 1/2" x 3")	008.74.205

→ Neon Flex Extension Cord

> Water resistant
> Flame retardant
> Abrasion resistant
> Brass, nickel-coated blade resists corrosion
> Flexible temperature range (-58F – +221F)
> Primelight® indicator light
> 15A/125V/1875W
> cULus or equivalent certified
> Color: Hi-vis pink

L x W x H x D	Item No.
15.2 m x 190.5 mm x 381 mm x 63.5 mm (50' x 7 1/2" x 15" x 2 1/2")	008.74.206
30.5 m x 159 mm x 394 mm x 76 mm (100' x 9" x 15 1/2" x 3")	008.74.207

→ Jobsite Locking Extension Cord

> Water resistant
> Flame retardant
> Flexible in temperatures from -40°F – +140°F
> Abrasion resistant
> Brass, nickel-coated blade resists corrosion
> Primelight® indicator light
> Primelok® locking connector
> 15A/125V/1875W
> cULus or equivalent certified
> Color: red/blue

L x W x H x D	Item No.
7.6 m x 133 mm x 330 mm x 51 mm (25' x 6 1/4" x 13" x 2")	008.74.208
15.2 m x 190.5 mm x 381 mm x 63.5 mm (50' x 7 1/2" x 15" x 2 1/2")	008.74.209
30.5 m x 159 mm x 394 mm x 76 mm (100' x 9" x 15 1/2" x 3")	008.74.210

→ Worklight

> Long-life, energy efficient LEDs are cool to the touch
> Sealed on/off power switch prevents dust & debris from entering the work light
> Versatile design extends to 292 mm (11 1/2") for floodlight & collapses to 159 mm (7 1/2") for flashlight use
> 2 Hands-free options: Hanging Hook
> Magnetic base grips steel surfaces & swivels to direct light where it's needed
> L x W x H: 159–292 x 170 x 63.5 mm (7 1/2"–11 1/2" x 6 11/16" x 2 1/2")
> Color: red/black

Color	Item No.
red/black	008.74.211

Supplied with
3 AA Batteries

Dimensional data not binding. Dimensions in mm, inches are approximate. We reserve the right to alter specifications without notice.

Material Handling

→ HR2 Heavy Duty Panel Rack

- > Easy loading and unloading
- > Rolls easily on 152 mm (6") wheels
- > Ready to assemble with just a wrench and hex key
- > Shipped flat in cartons
- > With extended shelves 318 x 470 mm (12 1/2" × 18 1/2")
- > 50 removable shelves (25 per side)
- > Each shelf holds up to 11 kg (25 lbs.)
- > Space between shelves: 64 mm (2 1/2")
- > Shelf angle: 5°
- > Base size: 584 x 991 mm (23" × 39")
- > Height: 1803 mm (71")
- > Weight capacity: 567 kg (1250 lbs.)
- > Material: Steel; Color: white

Description	Item No.
Panel Rack	007.91.141
Replacement Shelves	007.91.142
Replacement Casters	661.27.370

→ HR2 Rack Pads

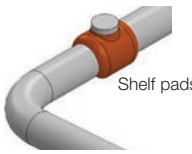

- > Pads snap onto HR2 shelves
- > Use 3 or more per shelf
- > Shelf pads provide a non-scratch contact between painted panels and metal shelves
- > Shelf spikes minimize contact between painted panels and metal shelves

Description	Item No.
Shelf pads	007.91.143
Shelf spikes	007.91.144

Supplied With
150 pcs./bag

→ Moving Blankets

- > 50 mm (2")
- > Non-woven binding and zigzag stitch pattern to keep cotton batting in place
- > Size: 1829 x 2032 mm (72" x 80")
- > Material: 100% Woven Polyester; Batting: Cotton

Version/Color	Weight	Packing	Item No.
Premium/blue	7 lbs.	1 pc.	007.80.105
Premium/blue	7 lbs.	12 pcs.	007.80.106
Economy/black	4.5 lbs.	12 pcs.	007.80.107

→ Handle on Demand

- > Helps to carry objects that are difficult to hold
- > Grips on multiple surfaces: countertops, metal, glass, and wood
- > Weight capacity: 90 kg (200 lbs.)
- > Material: Plastic, Rubber

Version	Color	Item No.
Double	red	008.54.471
Single	blue	008.54.470

Dimensional data not binding. Dimensions in mm, inches are approximate. We reserve the right to alter specifications without notice.

Support Materials

→ Lateral Parts Cart

> A heavy duty, cut-lumber delivery system
> Carries un-cut panels or can be configured with as many as 12 bins
> Allows workers to sort parts for easy identification and accessibility
> The end divider can be installed parallel or perpendicular with the cart for greater flexibility
> With the uprights removed, the cart can be used as a lumber cart
> Narrow width is perfect for congested aisles
> W × H × L: 559 x 1498 x 1524 mm (22" × 59" × 60")
> Weight capacity: 907 kg (2000 lbs.)
> Material: Steel; Color: red

	Item No.
Parts Cart	007.91.180
Replacement Casters	661.27.360

→ Protective End Caps

> Protects parts from damage
> Non-marring vinyl material
> Material: Vinyl

Color	Item No.
black	007.91.189

Supplied with
10 pcs.

Dimensional data not binding. Dimensions in mm, inches are approximate. We reserve the right to alter specifications without notice.

ProDryingRack™

> Load and maneuver parts of various sizes through the shop with these versatile shop racks
> Available in 3 expanding sizes
> Racks expand and contract with ease to accommodate different sized panels and for storing the rack
> With locking levers in the back to expand/contract and lock the rack at the desired width
> With 15 shelves
> Shelf tube diameter: 26 mm (1")
> Shelf tubes twist and lock into place without tools
> Shelf tube length: 762 mm (30")
> Shelf tubes are angled at 2° to keep parts from falling off
> Usable shelf spacing: 76 mm (3")
> Shelf tube levels can be removed to provide more clearance
> Material: Rack: Steel, powder-coated; Casters: Hard Rubber

→ ProDryingRack™ - 2

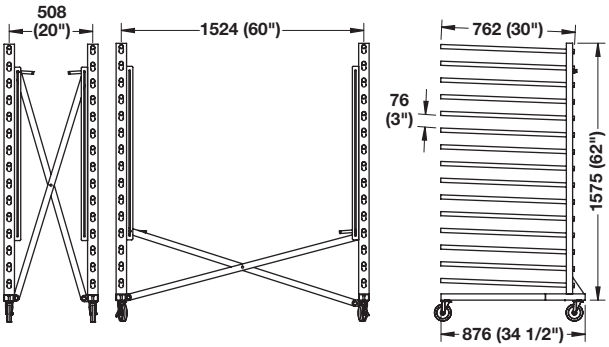

> Weight capacity: Up to 27 kg (60 lbs.) per level
> Total weight capacity: 408 kg (900 lbs.)

	Item No.
	007.91.061

→ ProDryingRack™ - 3

> Weight capacity: Up to 41 kg (90 lbs.) per level
> Total weight capacity: 614 kg (1350 lbs.)

	Item No.
	007.91.062

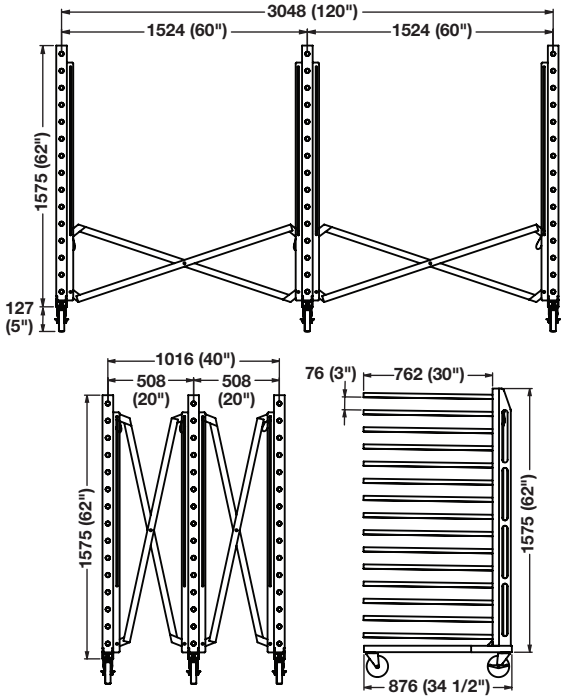

Casters page 12.106B

Dimensional data not binding. Dimensions in mm, inches are approximate. We reserve the right to alter specifications without notice.

ProDryingRack™

> Load and maneuver parts of various sizes through the shop with these versatile shop racks
> Available in 3 expanding sizes
> Racks expand and contract with ease to accommodate different sized panels and for storing the rack
> With locking levers in the back to expand/contract and lock the rack at the desired width
> With 15 shelves
> Shelf tube diameter: 26 mm (1")
> Shelf tubes twist and lock into place without tools
> Shelf tube length: 762 mm (30")
> Shelf tubes are angled at 2° to keep parts from falling off
> Usable shelf spacing: 76 mm (3")
> Shelf tube levels can be removed to provide more clearance
> Material: Rack: Steel, powder-coated; Casters: Hard Rubber

→ ProDryingRack™ - 4

> Weight capacity: Up to 55 kg (120 lbs.) per level
> Total weight capacity: 818 kg (1800 lbs.)

	Item No.
	007.91.063

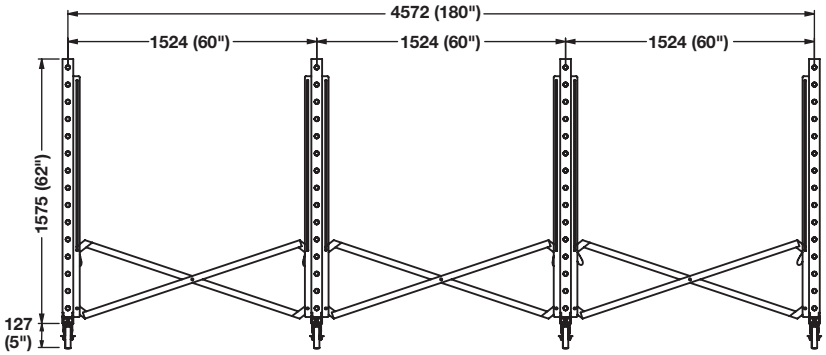

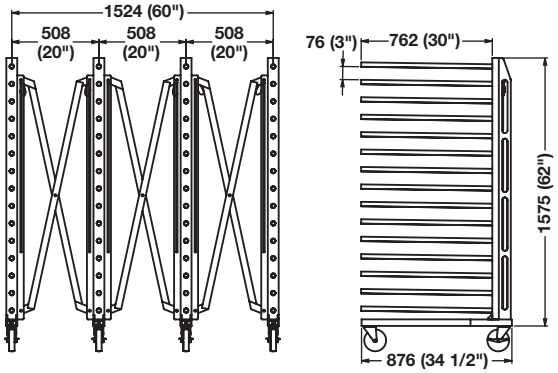

→ Replacement Caster Set

> Replacement caster set with 1/2"-13 threads
> Ø: 127 mm (5")

	Item No.
	661.27.380

Supplied with
2 casters with brake
2 casters w/out brake

Dimensional data not binding. Dimensions in mm, inches are approximate. We reserve the right to alter specifications without notice.

1 | Furniture and Cabinetry Hardware
2 | Architectural Hardware

www.hafele.com/us

THE COMPLETE HÄFELE